DUCTWORK SYMBOLS

- UP / DN — SUPPLY DUCT (UP & DOWN)
- UP / DN — EXHAUST DUCT (UP & DOWN)
- UP / DN — RETURN DUCT (UP & DOWN)
- ROUND AND SQUARE 4-WAY CEILING DIFFUSERS
- SQUARE 3-WAY CEILING DIFFUSERS
- SQUARE 2-WAY CEILING DIFFUSERS
- SQUARE 1-WAY CEILING DIFFUSERS
- LINEAR SLOT DIFFUSER
- SUPPLY TOP REGISTER OR GRILLE (WALL TYPE)
- EXHAUST OR RETURN CEILING REGISTER OR GRILLE
- EXHAUST OR RETURN BOTTOM REGISTER OR GRILLE (WALL TYPE)
- EXHAUST OR RETURN REGISTER OR TOP GRILLE (WALL TYPE)
- VANED ELBOW & AIR SPLIT TYPE DUCT TAKE-OFF
- CONNECT NEW DUCT TO EXISTING DUCT
- R — INCLINED RISE, IN DIRECTION OF AIR FLOW
- D — INCLINED DROP, IN DIRECTION OF AIR FLOW
- LIMIT OF DEMOLITION
- FC — FLEXIBLE CONNECTION, EQUIPMENT, VIBRATION, OR SEISMIC
- VANED ELBOW (PROVIDE ALL SQUARE OR RECTANGULAR ELBOWS WITH VANES EVEN IF SYMBOL IS MISSING)
- VANED ELBOW (SHORT RADIUS)
- STANDARD RADIUS ELBOW (LONG RADIUS)
- 10x8 — NEW DUCT (INSIDE DIMENSIONS: WIDTH x DEPTH)
- EXISTING DUCT TO REMAIN
- EXISTING DUCT TO BE REMOVED
- LOUVER (LOUVER SPECIFIED IN ARCHITECTURAL SECTION.)
- FLEXIBLE DUCTWORK (INSULATED)
- DUCT WITH SOUND LINING
- VD — MANUAL VOLUME DAMPER
- FD — FIRE DAMPER
- BDD — BACK DRAFT DAMPER
- F/S DPR — COMBINATION FIRE/SMOKE DAMPER
- N, 2 — POINT OF CHANGE IN DUCT CONSTRUCTION BY STATIC PRESSURE CLASS. THE NUMBER ASSIGNS PRESSURE CLASS (IN. OF WATER) WHICH WILL ACCOMMODATE MAXIMUM OPERATING PRESSURE IN THE DUCT SUBSECTION. THE SYMBOL CONTINUES THE ASSIGNMENT UNTIL THE DUCT TERMINATES OR ANOTHER SYMBOL APPEARS. A "N" SUPERSCRIPT INDICATES NEGATIVE PRESSURE.
- AUTOMATIC CONTROL DAMPER MODULATING
- AUTOMATIC CONTROL DAMPER TWO POSITION
- STAINLESS STEEL DUCT
- MANUAL SPLITTER DAMPER
- 45° SUPPLY — STANDARD BRANCH SUPPLY OR RETURN, NO SPLITTER (45° TAP)
- 45° RETURN
- UNIT HEATER (HORIZONTAL)
- TERMINAL UNIT WITH REHEAT COIL

GENERAL SYMBOLS

- DIRECTION OF PIPE PITCH (DOWN)
- DIRECTION OF FLOW
- ANCHOR
- REDUCER OR INCREASER
- ECCENTRIC REDUCER
- TOP CONNECTION, 45° OR 90°
- BOTTOM CONNECTION, 45° OR 90°
- SIDE CONNECTION
- CAPPED OUTLET
- RISE OR DROP IN PIPE
- UNION
- PIPE UP
- PIPE DOWN
- POINT OF CONNECTION BETWEEN NEW AND EXISTING WORK
- LIMIT OF DEMOLITION
- INVERTED BUCKET TRAP SET INCLUDING PIPING ACCESSORIES
- FLOAT & THERMOSTATIC TRAP SET INCLUDING PIPING ACCESSORIES
- THERMOSTATIC TRAP SET INCLUDING PIPING ACCESSORIES
- THERMOMETER
- PRESSURE GAGE
- FE — FLOW ELEMENT
- REFRIGERANT SIGHT GLASS
- TEST PLUG (PRESSURE/TEMPERATURE)
- AV — AUTOMATIC AIR VENT
- MV — MANUAL AIR VENT
- POINT OF CONNECTION BETWEEN NEW AND EXISTING WORK
- T — THERMOSTAT
- PRIMARY ELEMENT FOR FLOW METERING
- C — QUICK-COUPLE HOSE CONNECTOR
- INVERTED BUCKET STEAM TRAP ASSEMBLY (T)
- CLOSED-FLOAT-THERMOSTATIC STEAM TRAP ASSEMBLY (T)
- THERMOSTATIC STEAM TRAP (T)
- PRESSURE GAGE (WITH SIPHON ON STEAM SERVICE)

VALVE SYMBOLS

- GATE VALVE – THREADED/FLANGED
- GLOBE VALVE – THREADED/FLANGED
- GATE VALVE WITH 3/4" HOSE ADAPTER
- CHECK VALVE
- WYE STRAINER (WITH BALL VALVE & HOSE CONNECTION)
- FLEXIBLE CONNECTION
- ANGLE GLOBE VALVE
- BUTTERFLY VALVE
- BALL VALVE
- MODULATING CONTROL VALVE
- MODULATING CONTROL BUTTERFLY VALVE
- TWO POSITION CONTROL VALVE
- THREE-WAY MODULATING CONTROL VALVE
- THREE-WAY TWO POSITION CONTROL VALVE
- PRESSURE REGULATING VALVE
- PRESSURE SAFETY VALVE
- AUTOMATIC BALANCING CONTROL VALVE
- WATER BALANCE DEVICE
- CIRCUIT SETTER VALVE
- GATE VALVE WITH GLOBE-VALVED BYPASS
- PLUG VALVE
- CONTROL VALVE (CV) – FLOAT-OPERATED
- PRESSURE REDUCING VALVE (PRV)
- STRAINER WITH VALVED DRAIN AND QUICK-COUPLE HOSE CONNECTOR
- M — FLOW METER

CONTROLS SYMBOLS

- T — ROOM THERMOSTAT
- M — ROOM HUMIDISTAT
- TT — TEMPERATURE TRANSMITTER
- TT — TEMPERATURE TRANSMITTER, AVERAGING ELEMENT
- MT — MOISTURE (HUMIDITY) TRANSMITTER
- PT — PRESSURE TRANSMITTER
- SPS — STATIC PRESSURE SENSOR
- FT — FLOW TRANSMITTER
- IT — CURRENT TRANSMITTER
- CT — CONDUCTIVITY TRANSMITTER
- SD — SMOKE DETECTOR
- M — ELECTRIC OPERATED CONTROL DAMPER/OR VALVE
- dPT — DIFFERENTIAL PRESSURE TRANSMITTER
- HS — HAND SWITCH (HAND-OFF-AUTO SWITCH)
- KC — TIME CLOCK CONTROLLING EQUIPMENT ON A SCHEDULE
- ZC — VALVE OR DAMPER POSITION CONTROLLER
- TSL — TEMPERATURE SWITCH, LOW (FREEZESTAT)
- LT — LEVEL TRANSMITTER
- PSH — PRESSURE SWITCH HIGH
- LTCP — LOCAL TEMPERATURE CONTROL PANEL
- HVAC — HVAC CONTROL PANEL
- VFD — VARIABLE FREQUENCY DRIVE
- ECC — INTEGRATE CONTROL POINT ON REMOTE GRAPHICS WORKSTATION AT ENERGY CONTROL CENTER
- TC — TEMPERATURE CONTROLLER. SEE SEQUENCE OF OPERATION
- PC — PRESSURE CONTROLLER. SEE SEQUENCE OF OPERATION
- SC — SPEED CONTROLLER. SEE SEQUENCE OF OPERATION
- FC — FLOW CONTROLLER. SEE SEQUENCE OF OPERATION
- MOTOR STARTER
- FS — FLOW SWITCH
- TEMPERATURE SENSING ELEMENT FOR TRANSMITTING TEMPERATURE TO EMCS (PROVIDE 12 INCHES [200mm] MINIMUM LENGTH IN DUCT WHEN SPACE PERMITS.)
- A — SENSOR WITH AVERAGING ELEMENT TO TRANSMIT TEMPERATURE TO EMCS

PIPING SYMBOLS

- HPS — HIGH PRESSURE STEAM (60 PSIG AND ABOVE)
- HPR — HIGH PRESSURE STEAM CONDENSATE RETURN
- MPS — MEDIUM PRESSURE STEAM (16 PSIG THRU 59 PSIG)
- MPR — MEDIUM PRESSURE STEAM CONDENSATE RETURN
- LPS — LOW PRESSURE STEAM (15 PSIG AND BELOW)
- LPR — LOW PRESSURE STEAM CONDENSATE RETURN
- PC — CONDENSATE PUMP DISCHARGE
- HWS — HOT WATER HEATING SUPPLY
- HWR — HOT WATER HEATING RETURN
- CHS — CHILLED WATER SUPPLY
- CHR — CHILLED WATER RETURN
- MW — MAKE-UP WATER
- D — DRAIN LINE
- V — VENT LINE
- HPGR — HIGH PRESSURE GRAVITY CONDENSATE RETURN
- MPGR — MEDIUM PRESSURE GRAVITY CONDENSATE RETURN
- LPGR — LOW PRESSURE GRAVITY CONDENSATE RETURN
- G — NATURAL GAS MAIN FUEL

ABBREVIATIONS

A/E ARCHITECT / ENGINEER
AB AIR BLENDER
AAV AUTOMATIC AIR VENT
ACD AUTOMATIC CONTROL DAMPER,MODULATING
ACD-TP AUTOMATIC CONTROL DAMPER,TWO POSITION
AD ACCESS DOOR
AF AFTER FILTER
AFCV AIR FLOW CONTROL VALVE
AFF ABOVE FINISHED FLOOR
AFMD AIR FLOW MEASURING DEVICE
AHU AIR-HANDLING UNIT
AP ACCESS PANEL
APD AIR PRESSURE DROP
AS AIR SEPARATOR

BD BUTTERFLY DAMPER
BDD BACKDRAFT DAMPER
BFP BACKFLOW PREVENTER
BHP BRAKE HORSEPOWER
BIW BACKWARD INCLIND WHEEL (FAN)
BTU BRITISH THERMAL UNIT
BTUH BRITISH THERMAL UNIT PER HOUR

C CENTIGRADE (CELCIUS)
CC COOLING COIL
CCD COOLING COIL CONDENSATE DRAIN
CD CEILING DIFFUSER
CFM CUBIC FEET PER MINUTE
CFT CUBIC FEET
CG CEILING GRILLE
CHP CHILLED WATER PUMP
CHWR CHILLED WATER RETURN
CHWS CHILLED WATER SUPPLY
CI CAST IRON
CM CARBON MONOXIDE
CO CLEAN OUT
CO2 CARBON DIOXODE
CP CONDENSATE PUMP
CR CEILING REGISTER
CSG CLEAN STEAM GENERATOR
CV CONSTANT VOLUME
CW COLD WATER (POTABLE)

D DAMPER – AUTOMATIC
DB DECIBELS
Db DRY-BULB TEMPERATURE
DDC DIRECT DIGITAL CONTROLS
DEG DEGREE
DF DIFFUSER
DIA DIAMETER
DP DEW POINT TEMPERATURE
DPS DIFFERENTIAL PRESSURE SENSOR

EA EXHAUST AIR
EAT ENTERING AIR TEMPERATURE
EC EVAPORATIVE COOLER
ECC ENGINEERING CONTROL CENTER
EER ENERGY EFFICIENCY RATIO
EF EXHAUST FAN
EG EXHAUST GRILLE
EH EXHAUST HOOD
EJ EXPANSION JOINT
EMD END OF MAIN DRIP (STEAM)
ER EXHAUST REGISTER
ESP EXTERNAL STATIC PRESSURE
ET EXPANSION TANK
EWC EVAPORATIVE WATER COOLER
EWT ENTERING WATER TEMPERATURE
EX. EXISTING

F FAHRENHEIT
F&T FLOAT AND THERMOSTATIC
F/SDPR COMBINATION FIRE SMOKE DAMPER
FA FREE AREA
FC FLEXIBLE CONNECTION
FCW FORWARD CURVED WHEEL (FAN)
FD FLOOR DRAIN
FD FIRE DAMPER
FF FINAL FILTER
FM FLOW METER
FPM FEET PER MINUTE
FPS FEET PER SECOND
FS FLOW SWITCH
FSTAT FREEZESTAT
FT FEET
FT-LB FOOT-POUND
FV FACE VELOCITY

GA GAUGE
GH GRAVITY HOOD
GPD GALLONS PER DAY
GPM GALLONS PER MINUTE
GPR GAS PRESSURE REGULATOR
GS GALVANIZED STEEL

HAC HOUSEKEEPING AID CLOSET
HB HOSE BIBB
HC HEATING COIL
HD HEAD
HEX HEAT EXCHANGER
HOA HAND/OFF/AUTOMATIC
HP HEAT PUMP
HP HORSEPOWER
HPDT HIGH PRESSURE DRIP TRAP
HPR HIGH PRESSURE RETURN (STEAM CONDENSATE)
HPS HIGH PRESSURE SUPPLY (STEAM)
HSTAT HUMIDISTAT
HW HOT WATER
HWC HOT WATER COIL
HWP HEATING HOT WATER PUMP
HWR HEATING HOT WATER RETURN
HWS HEATING HOT WATER SUPPLY
HVD HOISTWAY VENT DAMPER
HX HEAT EXCHANGER
HZ HERTZ

I/O INPUT/OUTPUT
IAQ INDOOR AIR QUALITY
IBT INVERTED BUCKET TRAP
ID INSIDE DIAMETER
IN WC INCH WATER COLUMN
IN WG INCH WATER GAUGE
IN-LB INCH-POUND

KG KILOGRAM
KPA KILOPASCAL
KW KILOWATT
KWH KILOWATT HOUR

L/s LITERS PER SECOND (OR LITERS/SECOND)
LAT LEAVING AIR TEMPERATURE
LB/HR POUNDS PER HOUR
LF LINEAR FOOT (FEET)
LH LATENT HEAT
LPG LIQUID PROPANE GAS
LPR LOW PRESSURE RETURN (STEAM CONDENSATE)YR YEAR
LPRC LOW PRESSURE STEAM RETURN (CLEAN)
LPS LOW PRESSURE STEAM
LPSC LOW PRESSURE STEAM (CLEAN)
LSD LINEAR SLOT DIFFUSER
LTCP LOCAL TEMPERATURE CONTROL PANEL
LVR LOUVER
LWT LEAVING WATER TEMPERATURE

M METER
MA MIXED AIR
MAT MIXED AIR TEMPERATURE
MAU MAKE-UP AIR UNIT
MAV MANUAL AIR VENT
MAX MAXIMUM
MB MIXING BOX
MBH 1000 BTUH
MER MECHANICAL EQUIPMENT ROOM
MERV MINIMUM EFFICIENCY REPORTING VALUE
MH MANHOLE
MHP MOTOR HORSEPOWER
MIN MINIMUM
MM MILLIMETER
MOV MOTOR OPERATED VALVE
MPR MEDIUM PRESSURE RETURN (STEAM CONDENSATE)
MPS MEDIUM PRESSURE STEAM
MTD MEAN TEMPERATURE DIFFERENCE
MVD MANUAL VOLUME DAMPER

NA NOT APPLICABLE
NC NOISE CRITERIA
NC NORMALLY CLOSED
NO NORMALLY OPEN
NOM NOMINAL
NTS NOT TO SCALE

OA OUTSIDE AIR
OAG OUTSIDE AIR GRILLE
OAI OUTSIDE AIR INTAKE
OD OUTSIDE DIAMETER

P PUMP
PA PASCAL
PC PUMPED CONDENSATE
PD PRESSURE DROP
PEF PROPELLER (TYPE) EXHAUST FAN
PF PRE-FILTER
PG PRESSURE GAGE
PHC PREHEAT COIL
PPM PARTS PER MILLION
PRS PRESSURE REGULATING (VALVE) STATION
PRV PRESSURE REGULATING VALVE
PSIG POUNDS PER SQUARE INCH -GAGE
PSV PRESSURE SAFETY VALVE

RA RETURN AIR
RAHU ROFF AIR HANDLING UNIT
RAT RETURN AIR TEMPERATURE
REA RELIEF AIR
RF RETURN FAN
RG RETURN GRILLE
RH RELATIVE HUMIDITY
RPM REVOLUTIONS PER MINUTE
RR RETURN REGISTER
RV RELIEF VALVE

SA SUPPLY AIR
SAD SOUND ATTENUATING DEVICE
SAT SUPPLY AIR TEMPERATURE
SD SMOKE DETECTOR
SD SUPPLY AIR DIFFUSER
SDPR SMOKE DAMPER
SEN SENSIBLE HEAT
SF SUPPLY FAN
SG SUPPLY AIR GRILLE
SH STEAM HUMIDIFIER
SI SQUARE INCHES
SP STATIC PRESSURE
SP GR SPECIFIC GRAVITY
SPS STATIC PRESSURE SENSOR
SQF SQUARE FOOT (FEET)
SR SUPPLY AIR REGISTER
SS STAINLESS STEEL
SSR SOLID SEPARATOR
SV STEAM PRESSURE REDUCING VALVE

T & PCV TEMPERATURE AND PRESSURE CONTROL VALVE
TAB TESTING, ADJUSTING, BALANCE
TD TEMPERATURE DIFFERENCE
TDH TOTAL DYNAMIC HEAD
TDS TOTAL DISSOLVED SOLIDS
TG TRANSFER GRILLE
TP TRAP
TSP TOTAL STATIC PRESSURE
TSTAT THERMOSTAT
TU TERMINAL UNIT

UH UNIT HEATER

V VALVE
VAV VARIABLE AIR VOLUME
VD VOLUME DAMPER (MANUAL OPPOSED BLADE)
VFD VARIABLE FREQUENCY DRIVE
VI VIBRATION ISOLATOR

Wb WET-BULB (TEMPERATURE)
WEF WALL EXHAUST FAN
WF WATER FILTER
WFMD WATER FLOW MEASURING DEVICE
WG WATER GAGE
WM WATER METER
WPD WATER PRESSURE DROP

GENERAL NOTES

1. ALL PIPING AND DUCTS IN FINISHED ROOMS OR SPACES SHALL BE CONCEALED IN A FURRED CHASE OR ABOVE THE HARD SUSPENDED CEILING.
2. THE FIRST FIGURE OF DUCT SIZE INDICATES DIMENSION OF FACE SHOWN OR INDICATED. DUCT SIZES ARE NET INSIDE DIMENSIONS.
3. ACCESS PANELS IN HARD SUSPENDED CEILINGS ARE REQUIRED FOR ALL VALVES, TRAPS, DAMPERS, CLEANOUTS, CONTROLS, ETC. ACCESS PANELS SHALL BE FURNISHED AND INSTALLED UNDER THE ARCHITECTURAL SPECIFICATIONS.
4. TOTAL STATIC PRESSURE NOTED IN THE SCHEDULES INCLUDES DUCT SYSTEM, TERMINAL UNITS, FILTERS, COILS, ETC.
5. FOR TYPICAL STEAM AND WATER PIPING CONNECTIONS TO EQUIPMENT, SEE STANDARD EQUIPMENT DETAILS.
6. DIFFUSER, REGISTER AND GRILLE SIZES SHOWN ON FLOOR PLANS ARE NECK SIZES.
7. WATER PIPE CONNECTIONS TO AIR HEATING AND COOLING COILS SHALL BE MADE TO PROVIDE COUNTER FLOW BETWEEN WATER AND AIR.
8. REFER TO ARCHITECTURAL REFLECTED CEILING PLANS FOR EXACT LOCATIONS OF CEILING DIFFUSERS, REGISTERS, AND GRILLES.
9. SEISMIC PROVISIONS REQUIRED – SEE SPECIFICATIONS.
10. ALL PRESSURES LISTED ARE GAGE PRESSURE UNLESS OTHERWISE NOTED.
11. PROVIDE FLEXIBLE DUCT CONNECTION ON HIGH PRESSURE SIDE OF VAVS. FLEXIBLE DUCT CONNECTIONS ARE PERMITTED AT SUPPLY DIFFUSERS. FLEXIBLE CONNECTION NOT TO EXCEED 5 FEET.
12. FOR ALL PIPING SYSTEMS, PROVIDE A) DIELECTRIC UNIONS WHERE CONNECTING TWO DISSIMILAR METALS, B) DRAIN CONNECTIONS AT ALL LOW POINTS IN PIPING, AND C) MANUAL AIR VENTS AT ALL HIGH POINTS IN PIPING.
13. REBALANCE EXISTING AIRFLOWS AND WATERFLOWS FOR EXISTING AREAS SERVED BY SAME AHU AS RENOVATED AREA.
14. PROVIDE MANUAL VOLUME DAMPERS FOR ALL AIR DEVICE RUNOUTS. PROVIDE ADDITIONAL MANUAL VOLUME DAMPERS IN DUCTWORK AS REQUIRED WHETHER INDICATED OR NOT FOR PROPER HVAC TESTING & BALANCING PURPOSES AT NO ADDITIONAL COST. BALANCE USING OPPOSED BLADE DAMPERS IS NOT PERMITTED.
15. FIELD VERIFY ALL EXISTING DUCTWORK AND PIPING DIMENSIONS PRIOR TO START OF WORK.
16. REROUTE ELECTRICAL CONDUIT AS REQUIRED TO ACCOMMODATE NEW DUCTWORK. COORDINATE WITH ELECTRICAL.
17. ALL VAV TERMINAL UNITS AND FAN COIL UNITS MOUNTED ABOVE CEILINGS SHALL BE MOUNTED LESS THAN 10 FT A.F.F. ALL EQUIPMENT MOUNTED MORE THAN 10 FT A.F.F. SHALL BE PROVIDED WITH A WORK PLATFORM PER CODE.
18. ALL EQUIPMENT SHALL BE LOCATED TO ALLOW ACCESS FOR GENERAL MAINTENANCE. CONFORM TO MFR'S RECOMMENDATIONS ON EQUIPMENT CLEARANCES.
19. REPAIR AND RESEAL EXISTING DUCTWORK AS REQUIRED.
20. NO EQUIPMENT, PIPING, DUCTWORK, CONDUIT, ETC. SHALL BE ABANDONED IN PLACE. REMOVE ALL PREVIOUSLY EXISTING ABANDONED AND NEW DEMO ITEMS. COORDINATE WITH OWNER AS REQUIRED.

DRAWING SYMBOLS

- 2 / H4 — DETAIL NUMBER / DRAWING NUMBER WHERE DRAWN
- A / H7 — SECTION LETTER / DRAWING NUMBER WHERE SHOWN
- 26-SF 3 — "E" PREFIX DESIGNATES EXISTING TO REMAIN; BUILDING NO. WHERE EQUIPMENT IS LOCATED; EQUIPMENT ABBREVIATION (SUPPLY FAN); SUPPLY FAN NO. 3 IN BUILDING NO. 26; TYPICAL UNIT NO.
- 26-TU-1-1 — BUILDING NO. WHERE EQUIPMENT IS LOCATED; ITEM (TERMINAL UNIT SHOWN); ITEM NUMBER (TERMINAL UNIT NO. 1); SERVED BY AIR HANDLER UNIT NO. 1

FULLY SPRINKLERED

Revisions:	Date:

CONSULTANTS:

Allen&Hoshall
engineering since 1915
1661 International Drive Memphis, TN 38120
901 820 0820 fax 901 683 1001
www.allenhoshall.com

SEAL:

MATTHEW GLYNN SINGLETON — REGISTERED ENGINEER — No. 115054A — STATE OF TENNESSEE

ARCHITECT/ENGINEERS:

brg3sarchitects
11 W. Huling Avenue
Memphis, Tennessee 38103
t 901.260.9600
f 301.531.8042
w brg3s.com

DRAWING TITLE: LEGEND AND GENERAL NOTES - MECHANICAL
SCALE: N/A
APPROVED PROJECT DIRECTOR:

PROJECT TITLE: VA BUILDING 1A ENTRANCE EXPANSION
LOCATION: VAMC, Memphis, Tennessee
DATE: January 27, 2014 | CHECKED: JRN | DRAWN: MGS

PROJECT NUMBER: 61660
BUILDING NUMBER: 1A
DRAWING NUMBER: MH-001
DWG. OF

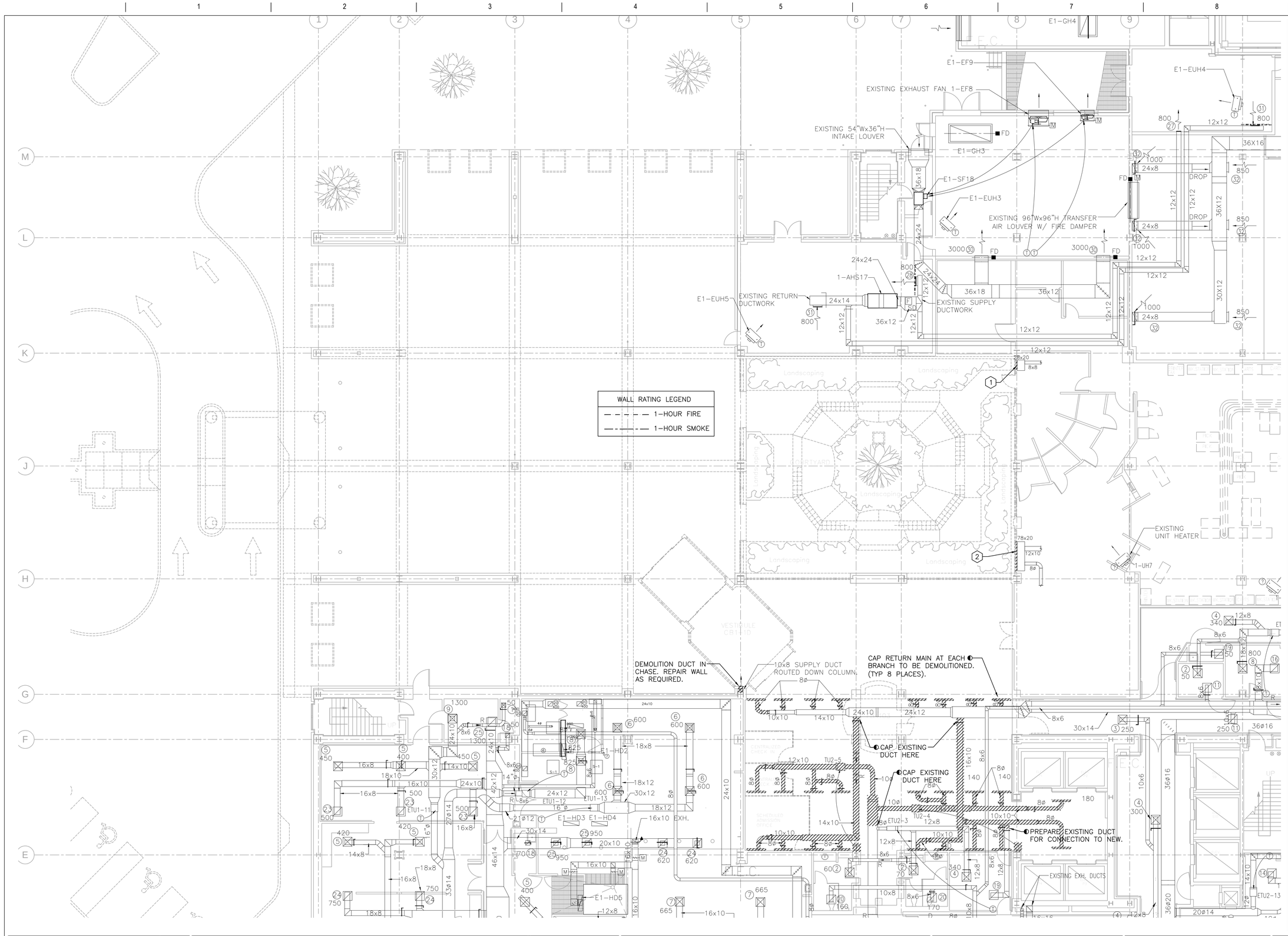

KEYNOTES

1. REMOVE EXISTING 30x22 LOUVER AND COORDINATE WITH OWNER FOR STORAGE. PREPARE EXISTING 28x20 DUCT FOR CONNECTION TO NEW. VERIFY EXISTING DIMENSIONS PRIOR TO NEW WORK.

2. REMOVE EXISTING 80x22 LOUVER AND COORDINATE WITH OWNER FOR STORAGE. PREPARE EXISTING 78x20 DUCT FOR CONNECTION TO NEW. VERIFY EXISTING DIMENSIONS PRIOR TO NEW WORK.

GENERAL NOTES

1. FOR ALL VAV BOXES TO BE REMOVED, DEMOLITION ALL ASSOCIATED DUCTWORK, PIPING, ELECTRICAL, & CONTROLS. RETURN CONTROLS TO BE REMOVED TO VA MAINTENANCE FOR RE-USE.

2. UNLESS REQUIRED BY NEW WORK, ALL OTHER DUCTWORK, PIPING, ELECTRICAL, & CONTROLS TO REMAIN AS IS.

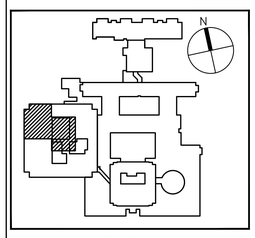

KEYPLAN

NORTH

FULLY SPRINKLERED

Revisions: Date:

CONSULTANTS:

Allen&Hoshall
engineering since 1915
1661 International Drive Memphis, TN 38120
901 820 0820 fax 901 683 1001
www.allenhoshall.com

SEAL:

MATTHEW GLYNN SINGLETON
REGISTERED ENGINEER
No. 115054
STATE OF TENNESSEE

ARCHITECT/ENGINEERS:

brg3s architects
11 W. Huling Avenue
Memphis, Tennessee 38103
t 901.260.9600
f 301.531.8042
w brg3s.com

DRAWING TITLE: PARTIAL GROUND FLOOR MECHANICAL PLAN - DEMOLITION

SCALE: 1/8"=1'-0"

APPROVED PROJECT DIRECTOR:

PROJECT TITLE: VA BUILDING 1A ENTRANCE EXPANSION

LOCATION: VAMC, Memphis, Tennessee

DATE: January 27, 2014 | CHECKED: RLT | DRAWN: MGS

PROJECT NUMBER: 61660

BUILDING NUMBER: 1A

DRAWING NUMBER: MD-101

DWG. OF

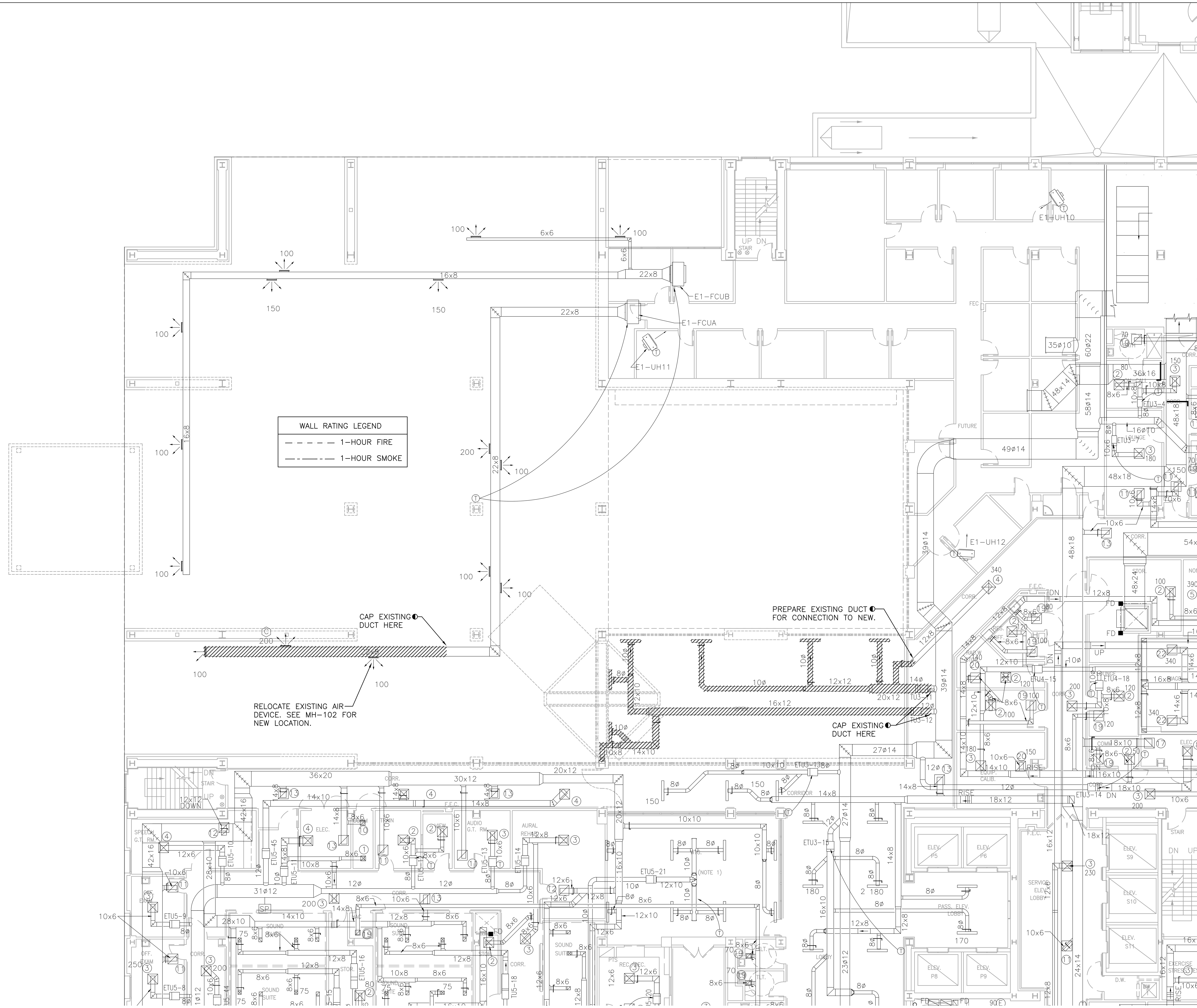

GENERAL NOTES

1. AFTER DEMOLITION, REBALANCE EXISTING VAVs SERVED BY EXISTING AHU-3.

2. FOR ALL VAV BOXES TO BE REMOVED, DEMOLITION ALL ASSOCIATED DUCTWORK, PIPING, ELECTRICAL, & CONTROLS. RETURN CONTROLS TO BE REMOVED TO VA MAINTENANCE FOR RE-USE.

3. UNLESS REQUIRED BY NEW WORK, ALL OTHER DUCTWORK, PIPING, ELECTRICAL, & CONTROLS TO REMAIN AS IS.

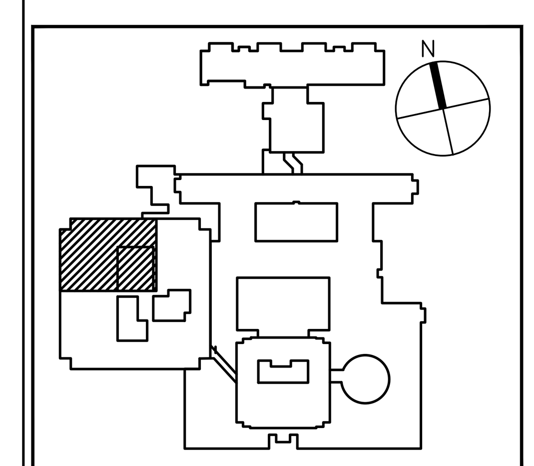

KEYPLAN

NORTH

FULLY SPRINKLERED

Revisions: | Date:

CONSULTANTS:

Allen&Hoshall
engineering since 1915
1661 International Drive Memphis, TN 38120
901 820 0820 fax 901 683 1001
www.allenhoshall.com

SEAL: MATTHEW GLYNN SINGLETON, REGISTERED ENGINEER, No. 115054, STATE OF TENNESSEE

ARCHITECT/ENGINEERS:

brg3s architects
11 W. Huling Avenue
Memphis, Tennessee 38103
t 901.260.9600
f 301.531.8042
w brg3s.com

DRAWING TITLE: PARTIAL FIRST FLOOR MECHANICAL PLAN - DEMOLITION

SCALE: 1/8"=1'-0"

APPROVED PROJECT DIRECTOR:

PROJECT TITLE: VA BUILDING 1A ENTRANCE EXPANSION

LOCATION: VAMC, Memphis, Tennessee

DATE: January 27, 2014 | CHECKED: JRN | DRAWN: MGS

PROJECT NUMBER: 61660

BUILDING NUMBER: 1A

DRAWING NUMBER: MD-102

DWG. OF

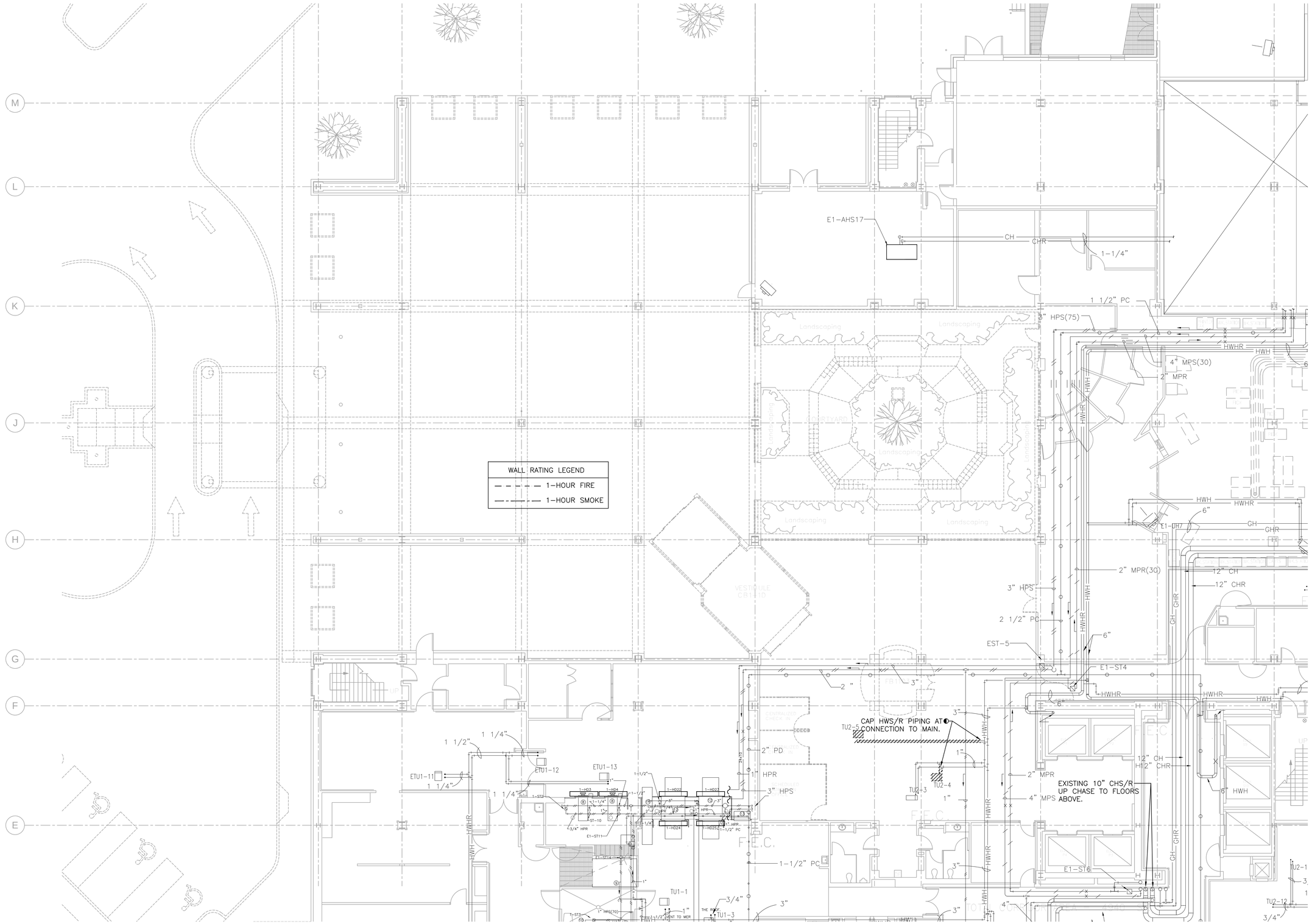

GENERAL NOTES

1. FOR ALL VAV BOXES TO BE REMOVED, DEMOLITION ALL ASSOCIATED DUCTWORK, PIPING, ELECTRICAL, & CONTROLS. RETURN CONTROLS TO BE REMOVED TO VA MAINTENANCE FOR RE-USE.

2. UNLESS REQUIRED BY NEW WORK, ALL OTHER DUCTWORK, PIPING, ELECTRICAL, & CONTROLS TO REMAIN AS IS.

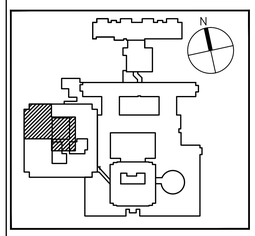

KEYPLAN

NORTH

FULLY SPRINKLERED

Revisions:	Date:

CONSULTANTS:

Allen&Hoshall
engineering since 1915
1661 International Drive Memphis, TN 38120
901 820 0820 fax 901 683 1001
www.allenhoshall.com

SEAL:

MATTHEW GLYNN SINGLETON
REGISTERED ENGINEER
No. 115094
STATE OF TENNESSEE

ARCHITECT/ENGINEERS:

brg3s architects
11 W. Huling Avenue
Memphis, Tennessee 38103
t 901.260.9600
f 301.531.8042
w brg3s.com

DRAWING TITLE: PARTIAL GROUND FLOOR PIPING PLAN - DEMOLITION
SCALE: 1/8"=1'-0"

APPROVED PROJECT DIRECTOR:

PROJECT TITLE: VA BUILDING 1A ENTRANCE EXPANSION

LOCATION: VAMC, Memphis, Tennessee

DATE: January 27, 2014 | CHECKED: JRN | DRAWN: MGS

PROJECT NUMBER: 61660

BUILDING NUMBER: 1A

DRAWING NUMBER: MD-201

DWG. OF

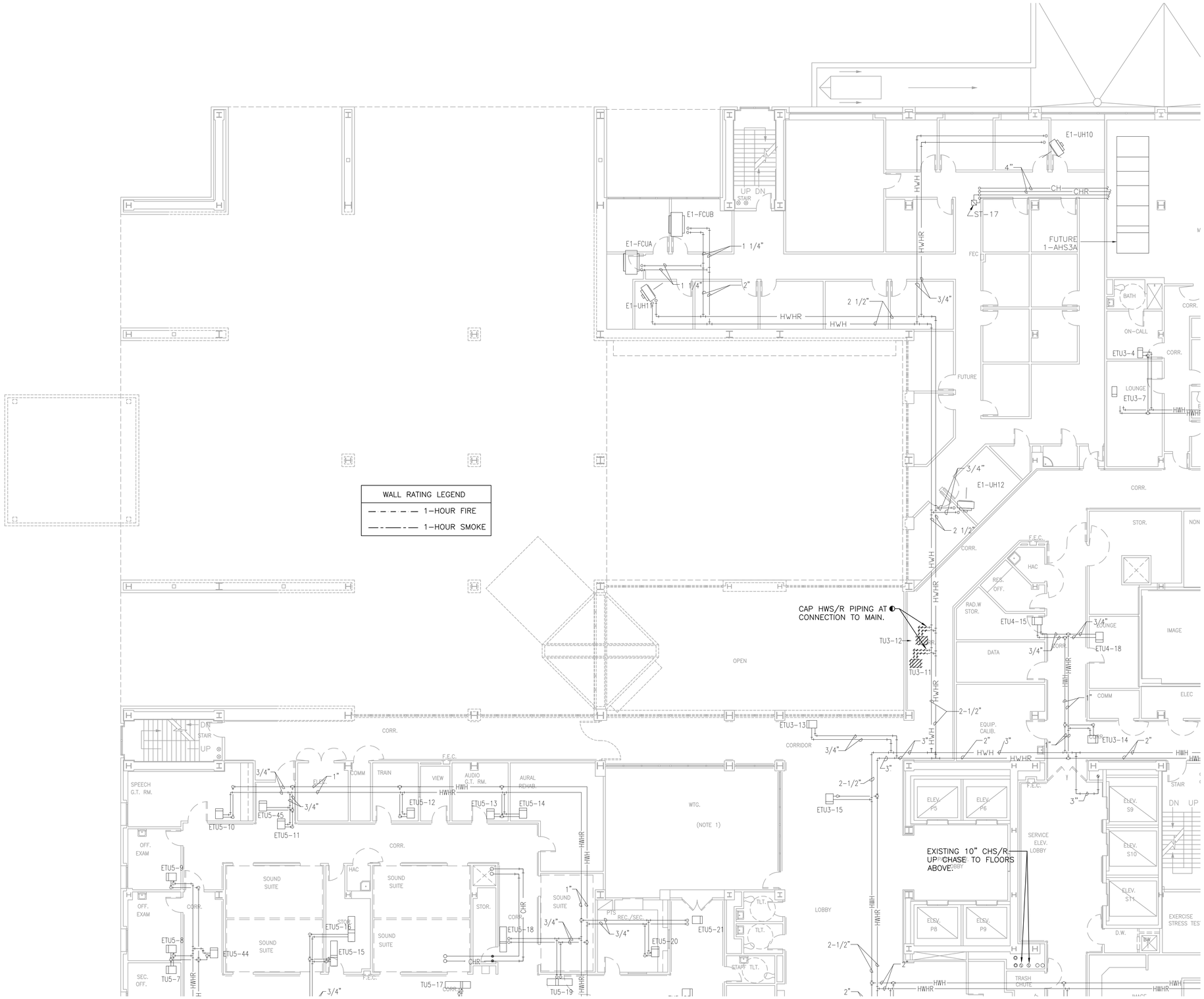

GENERAL NOTES

1. FOR ALL VAV BOXES TO BE REMOVED, DEMOLITION ALL ASSOCIATED DUCTWORK, PIPING, ELECTRICAL, & CONTROLS. RETURN CONTROLS TO BE REMOVED TO VA MAINTENANCE FOR RE-USE.

2. UNLESS REQUIRED BY NEW WORK, ALL OTHER DUCTWORK, PIPING, ELECTRICAL, & CONTROLS TO REMAIN AS IS.

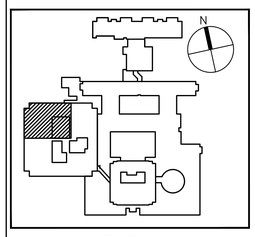

KEYPLAN

NORTH

FULLY SPRINKLERED

Revisions:	Date:

CONSULTANTS:

Allen&Hoshall
engineering since 1915
1661 International Drive Memphis, TN 38120
901 820 0820 fax 901 683 1001
www.allenhoshall.com

SEAL:

MATTHEW GLYNN SINGLETON
REGISTERED ENGINEER
No. 115058A
STATE OF TENNESSEE

ARCHITECT/ENGINEERS:

brg3s architects
11 W. Huling Avenue
Memphis, Tennessee 38103
t 901.260.9600
f 301.531.8042
w brg3s.com

DRAWING TITLE: PARTIAL FIRST FLOOR PIPING PLAN - DEMOLITION
SCALE: 1/8"=1'-0"
APPROVED PROJECT DIRECTOR:

PROJECT TITLE: VA BUILDING 1A ENTRANCE EXPANSION
LOCATION: VAMC, Memphis, Tennessee
DATE: January 27, 2014
CHECKED: JRN
DRAWN: MGS

PROJECT NUMBER: 61660
BUILDING NUMBER: 1A
DRAWING NUMBER: MD-202
DWG. OF

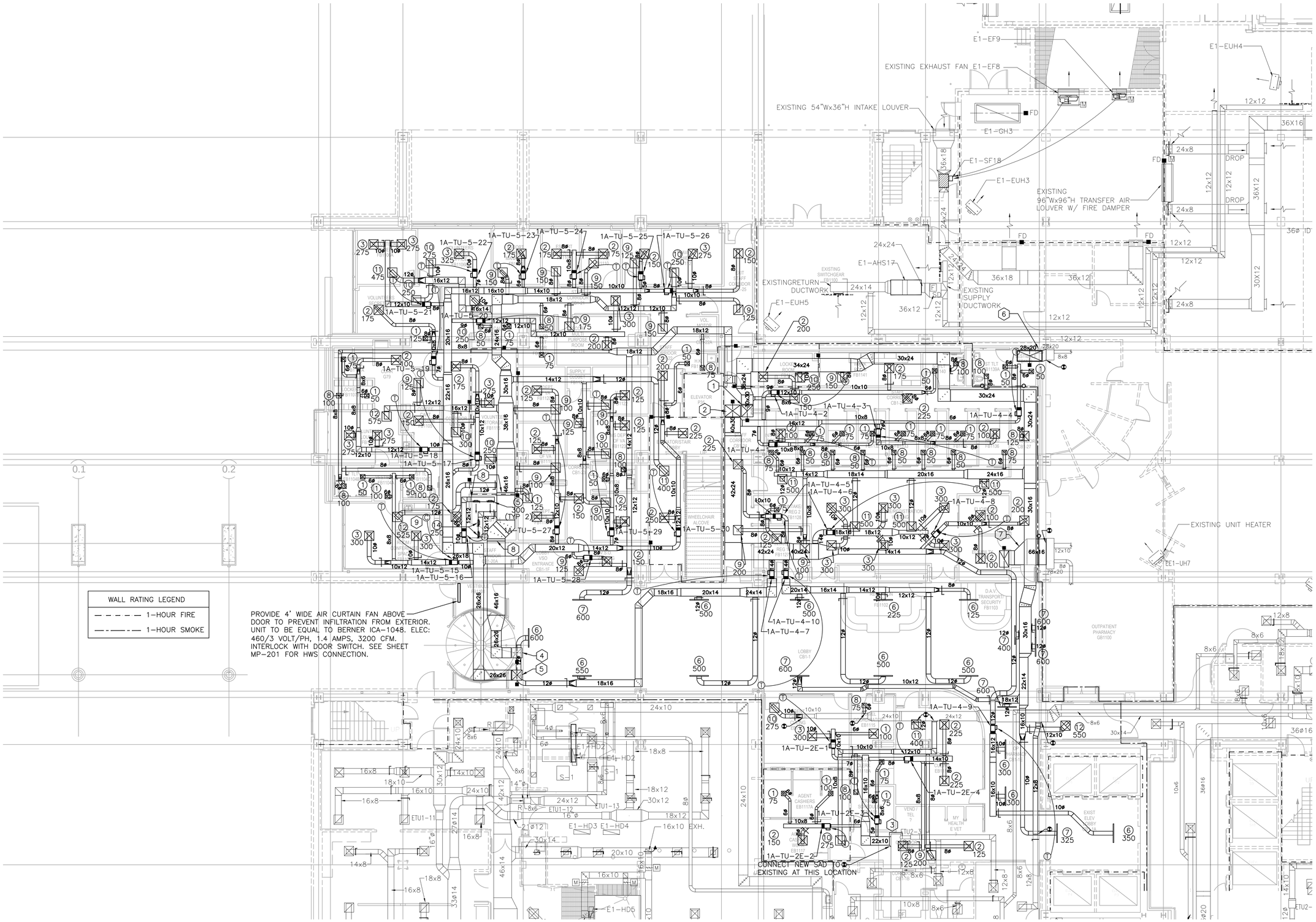

GENERAL NOTES

1. REBALANCE EXISTING TO REMAIN VAVs SERVED BY EXISTING AHU-2.

KEYNOTES

1. ROUTE 30x30 EXHAUST DUCT UP THROUGH CHASE TO FIRST FLOOR CEILING LEVEL. SEE SHEET MH-102 FOR CONTINUATION.
2. ROUTE 40x30 SUPPLY DUCT UP THROUGH CHASE TO FIRST FLOOR CEILING LEVEL. SEE SHEET MH-102 FOR CONTINUATION.
3. CAP EXISTING DUCT HERE.
4. ROUTE 26x26 RETURN DUCT DOWN FROM FIRST FLOOR MECHANICAL ROOM. SEE SHEET MH-401 FOR CONTINUATION.
5. ROUTE 26x26 SUPPLY DUCT DOWN FROM FIRST FLOOR MECHANICAL ROOM. SEE SHEET MH-401 FOR CONTINUATION.
6. CONNECT EXISTING 28x20 DUCT TO NEW RELIEF DUCT. ROUTE OVER TO CHASE AND TRANSITION TO 62x26 DUCT IN CHASE UP TO FIRST FLOOR. SEE SHEET MH-102 FOR CONTINUATION.
7. CONNECT EXISTING 78x20 DUCT TO NEW 66x16 RELIEF DUCT. ROUTE UNDER NEW 28x14 DUCT AND TRANSITION TO 42x24 DUCT IN CHASE UP TO FIRST FLOOR. SEE SHEET MH-102 FOR CONTINUATION.
8. PROVIDE 9-GAUGE EXPANDED STEEL SECURITY GRILLE IN DUCT AT I.T. ROOM WALL PENETRATION. SEE VA PHYSICAL SECURITY MANUAL, SECTION 5.4.
9. PROVIDE CO2 CENSOR IN CONF ROOM RETURN DUCT. WHEN CONCENTRATION RISES ABOVE SETPOINT OF 700 PPM (ADJ), MODULATE VAV BOX OPEN AND ACTIVATE REHEAT AS REQUIRED TO MAINTAIN TEMPERATURE SETPOINT.

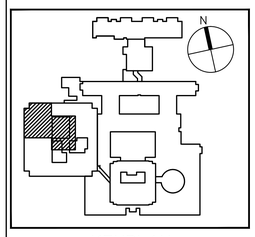

KEYPLAN

NORTH

FULLY SPRINKLERED

Revisions: Date:

CONSULTANTS:

Allen&Hoshall
engineering since 1915
1661 International Drive Memphis, TN 38120
901 820 0820 fax 901 683 1001
www.allenhoshall.com

SEAL:

MATTHEW GLYNN SINGLETON REGISTERED ENGINEER No. 115004 STATE OF TENNESSEE

ARCHITECT/ENGINEERS:

brg3s architects
11 W. Huling Avenue
Memphis, Tennessee 38103
t 901.260.9600
f 301.531.8042
w brg3s.com

DRAWING TITLE: PARTIAL GROUND FLOOR MECHANICAL PLAN - NEW WORK
SCALE: 1/8"=1'-0"

APPROVED PROJECT DIRECTOR:

PROJECT TITLE: VA BUILDING 1A ENTRANCE EXPANSION

LOCATION: VAMC, Memphis, Tennessee

DATE: January 27, 2014 | CHECKED: JRN | DRAWN: MGS

PROJECT NUMBER: 61660

BUILDING NUMBER: 1A

DRAWING NUMBER: MH-101

DWG. OF

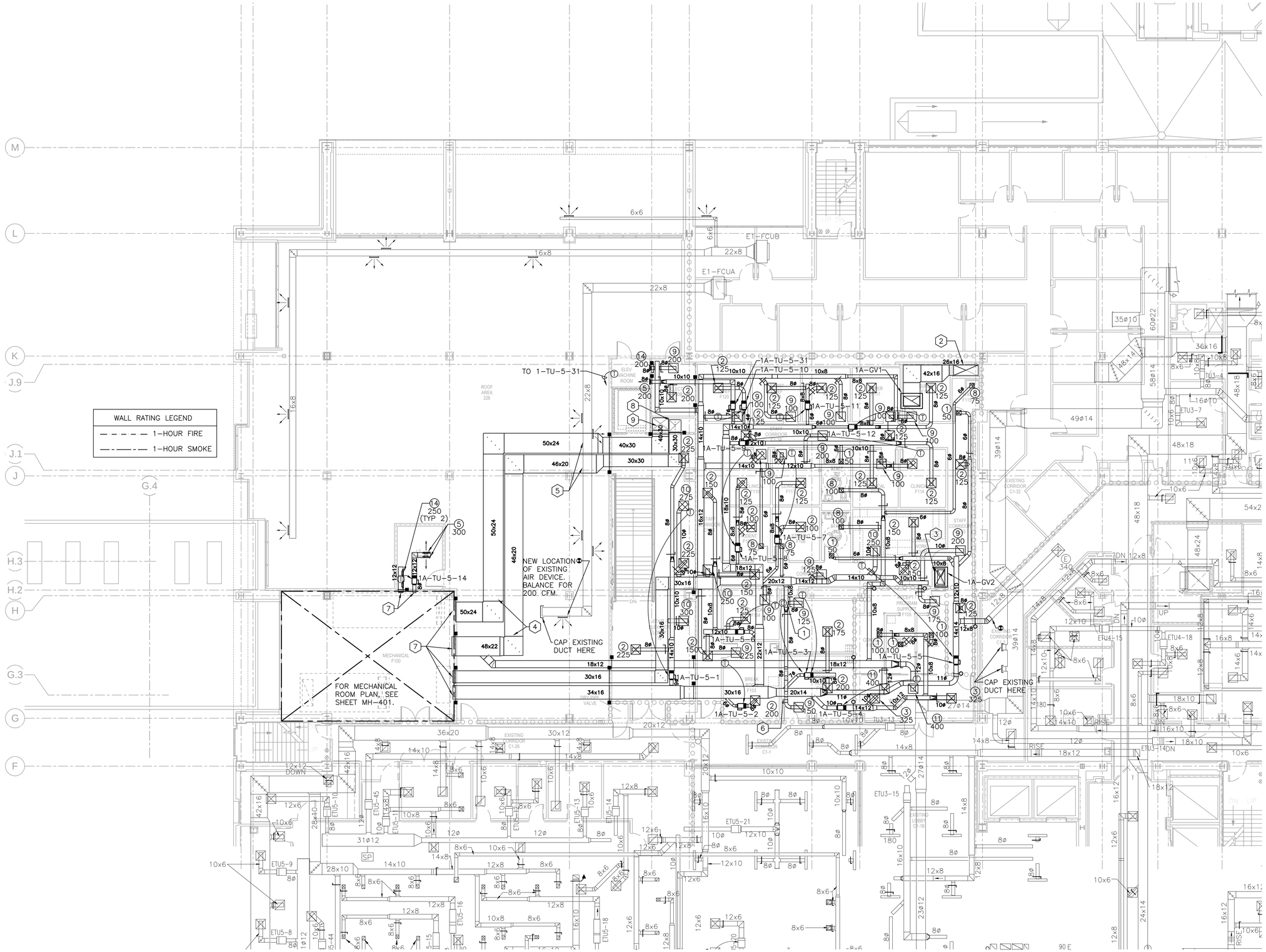

GENERAL NOTES

1. ROUTE DUCTWORK IN MECHANICAL ROOM & SHELL SPACE TIGHT TO STRUCTURE WHERE POSSIBLE. SPACE IN ROOM IS LIMITED: ROUTE DUCTWORK & PIPING WITH A MINIMUM OF ELBOWS.

KEYNOTES

1. PROVIDE C02 CENSOR IN CONF ROOM RETURN DUCT. WHEN CONCENTRATION RISES ABOVE SETPOINT OF 700 PPM, (ADJ) MODULATE VAV BOX OPEN AND ACTIVATE REHEAT AS REQUIRED TO MAINTAIN TEMPERATURE SETPOINT.
2. ROUTE NEW 62x26 RELIEF DUCT UP THROUGH CHASE. TRANSITION TO 26x16 THRU WALL THEN TO 42x16. ROUTE TO ROOF VENT AS SHOWN & TRANSITION TO FULL-SIZE CONNECTION. SEE SHEET MH-101 FOR CONTINUATION.
3. ROUTE NEW 42x24 RELIEF DUCT UP THROUGH CHASE. ROUTE TO ROOF VENT AS SHOWN & TRANSITION TO FULL-SIZE CONNECTION. SEE SHEET MH-101 FOR CONTINUATION.
4. ROUTE NEW DUCTWORK AS CLOSE TO BOTTOM OF STRUCTURE OR DECK AS POSSIBLE. BOTTOM OF DUCT TO BE MINIMUM OF 9'3" AFF. OFFSET AS REQUIRED.
5. ROUTE NEW DUCTWORK AS CLOSE TO BOTTOM OF STRUCTURE OR DECK AS POSSIBLE. OFFSET NEW AND EXISTING AS REQUIRED. BOTTOM OF DUCT TO BE MINIMUM OF 9'3" AFF. OFFSET AS REQUIRED.
6. ROUTE SUPPLY LOW UNDER STRUCTURE. ROUTE RETURN ABOVE IN JOIST SPACE.
7. SEE MECHANICAL PLAN ON SHEET MH-401 FOR CONTINUATION.
8. ROUTE 30x30 EXHAUST DUCT DOWN THROUGH CHASE TO GROUND FLOOR CEILING LEVEL. SEE SHEET MH-101 FOR CONTINUATION.
9. ROUTE 40x30 SUPPLY DUCT DOWN THROUGH CHASE TO GROUND FLOOR CEILING LEVEL. SEE SHEET MH-101 FOR CONTINUATION.

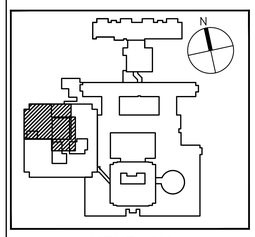

KEYPLAN

NORTH

FULLY SPRINKLERED

Revisions: Date:

CONSULTANTS:

Allen&Hoshall
engineering since 1915
1661 International Drive Memphis, TN 38120
901 820 0820 fax 901 683 1001
www.allenhoshall.com

SEAL:

MATTHEW GLYNN SINGLETON
REGISTERED ENGINEER
No. 115054
STATE OF TENNESSEE

ARCHITECT/ENGINEERS:

brg3s architects
11 W. Huling Avenue
Memphis, Tennessee 38103
t 901.260.9600
f 301.531.8042
w brg3s.com

DRAWING TITLE: PARTIAL FIRST FLOOR MECHANICAL PLAN - NEW WORK
SCALE: 1/8"=1'-0"
APPROVED PROJECT DIRECTOR:

PROJECT TITLE: VA BUILDING 1A ENTRANCE EXPANSION
LOCATION: VAMC, Memphis, Tennessee
DATE: January 27, 2014
CHECKED: JRN
DRAWN: MGS

PROJECT NUMBER: 61660
BUILDING NUMBER: 1A
DRAWING NUMBER: MH-102
DWG. OF

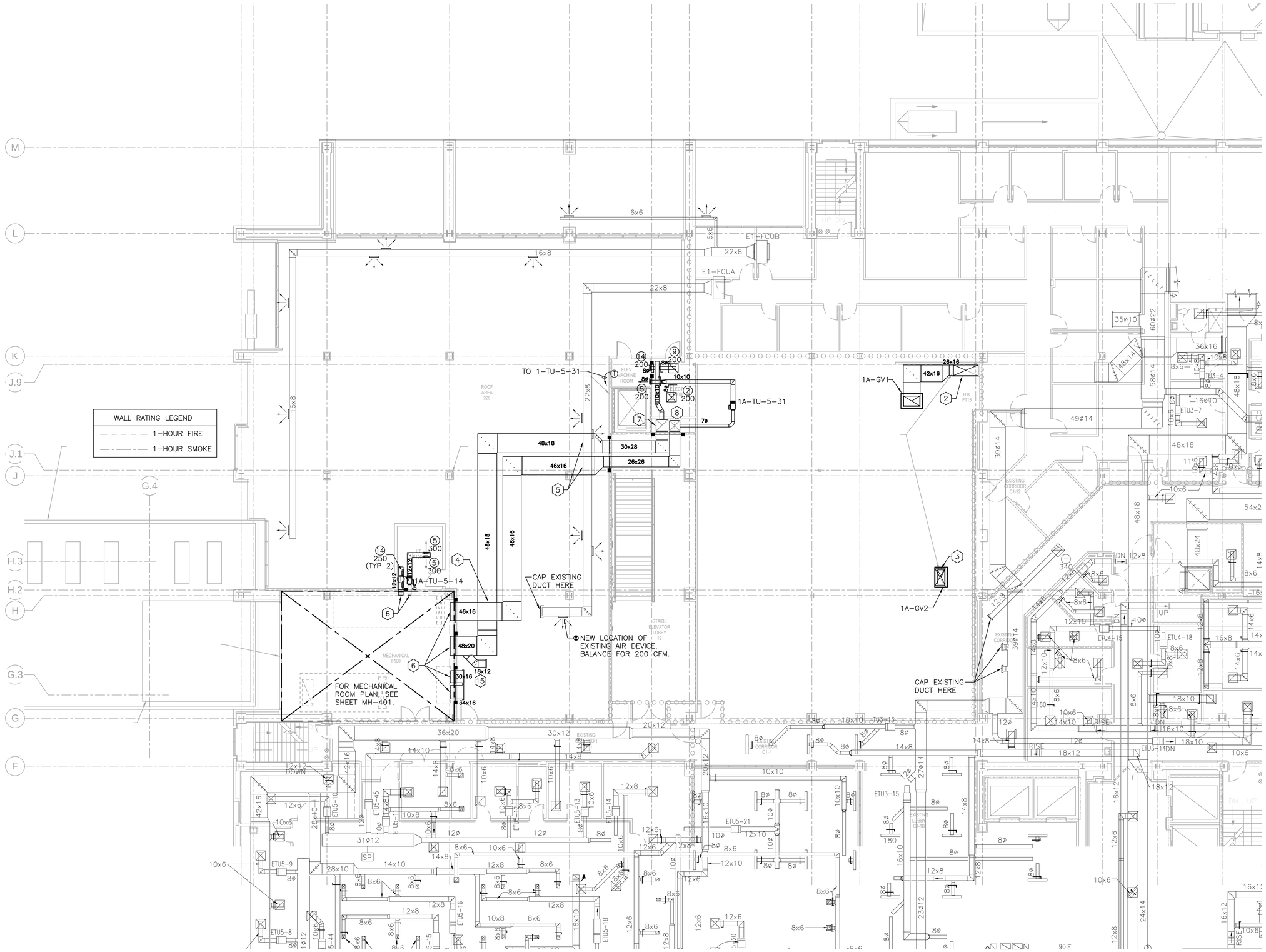

GENERAL NOTES

1. ROUTE DUCTWORK IN MECHANICAL ROOM TIGHT TO STRUCTURE WHERE POSSIBLE. SPACE IN ROOM IS LIMITED: ROUTE DUCTWORK AND PIPING WITH A MINIMUM OF ELBOWS.

KEYNOTES

1. NOT USED
2. ROUTE NEW 62x26 RELIEF DUCT UP THROUGH CHASE. TRANSITION TO 26x16 THRU WALL THEN TO 42x16. ROUTE TO ROOF VENT AS SHOWN & TRANSITION TO FULL-SIZE CONNECTION. SEE SHEET MH-101 FOR CONTINUATION.
3. ROUTE NEW 42x24 RELIEF DUCT UP THROUGH CHASE. ROUTE TO ROOF VENT AS SHOWN & TRANSITION TO FULL-SIZE CONNECTION. SEE SHEET MH-101 FOR CONTINUATION.
4. ROUTE NEW DUCTWORK AS CLOSE TO BOTTOM OF STRUCTURE OR DECK AS POSSIBLE. BOTTOM OF DUCT TO BE MINIMUM OF 9'3" AFF. OFFSET AS REQUIRED.
5. ROUTE NEW DUCTWORK AS CLOSE TO BOTTOM OF STRUCTURE OR DECK AS POSSIBLE. OFFSET NEW AND EXISTING AS REQUIRED. BOTTOM OF DUCT TO BE MINIMUM OF 9'3" AFF. OFFSET AS REQUIRED.
6. SEE MECHANICAL PLAN ON SHEET MH-401 FOR CONTINUATION.
7. ROUTE 30x28 EXHAUST DUCT DOWN THROUGH CHASE TO GROUND FLOOR CEILING LEVEL. SEE SHEET MH-101 FOR CONTINUATION.
8. ROUTE 26x26 SUPPLY DUCT DOWN THROUGH CHASE TO GROUND FLOOR CEILING LEVEL. SEE SHEET MH-101 FOR CONTINUATION.

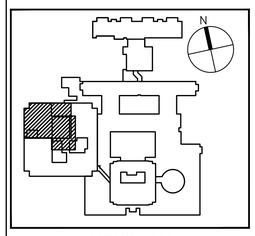

FULLY SPRINKLERED

Revisions:	Date:

CONSULTANTS:

Allen&Hoshall
engineering since 1915
1661 International Drive Memphis, TN 38120
901 820 0820 fax 901 683 1001
www.allenhoshall.com

SEAL:

MATTHEW GLYNN SINGLETON
REGISTERED ENGINEER
No. 115054
STATE OF TENNESSEE

ARCHITECT/ENGINEERS:

brg3s architects
11 W. Huling Avenue
Memphis, Tennessee 38103
t 901.260.9600
f 301.531.8042
w brg3s.com

DRAWING TITLE: PARTIAL FIRST FLOOR MECH - NEW WORK - BID ALT 3
SCALE: 1/8"=1'-0"

APPROVED PROJECT DIRECTOR:

PROJECT TITLE: VA BUILDING 1A ENTRANCE EXPANSION

LOCATION: VAMC, Memphis, Tennessee

DATE: January 27, 2014 | CHECKED: JRN | DRAWN: MGS

PROJECT NUMBER: 61660

BUILDING NUMBER: 1A

DRAWING NUMBER: MH-102.1

DWG. OF

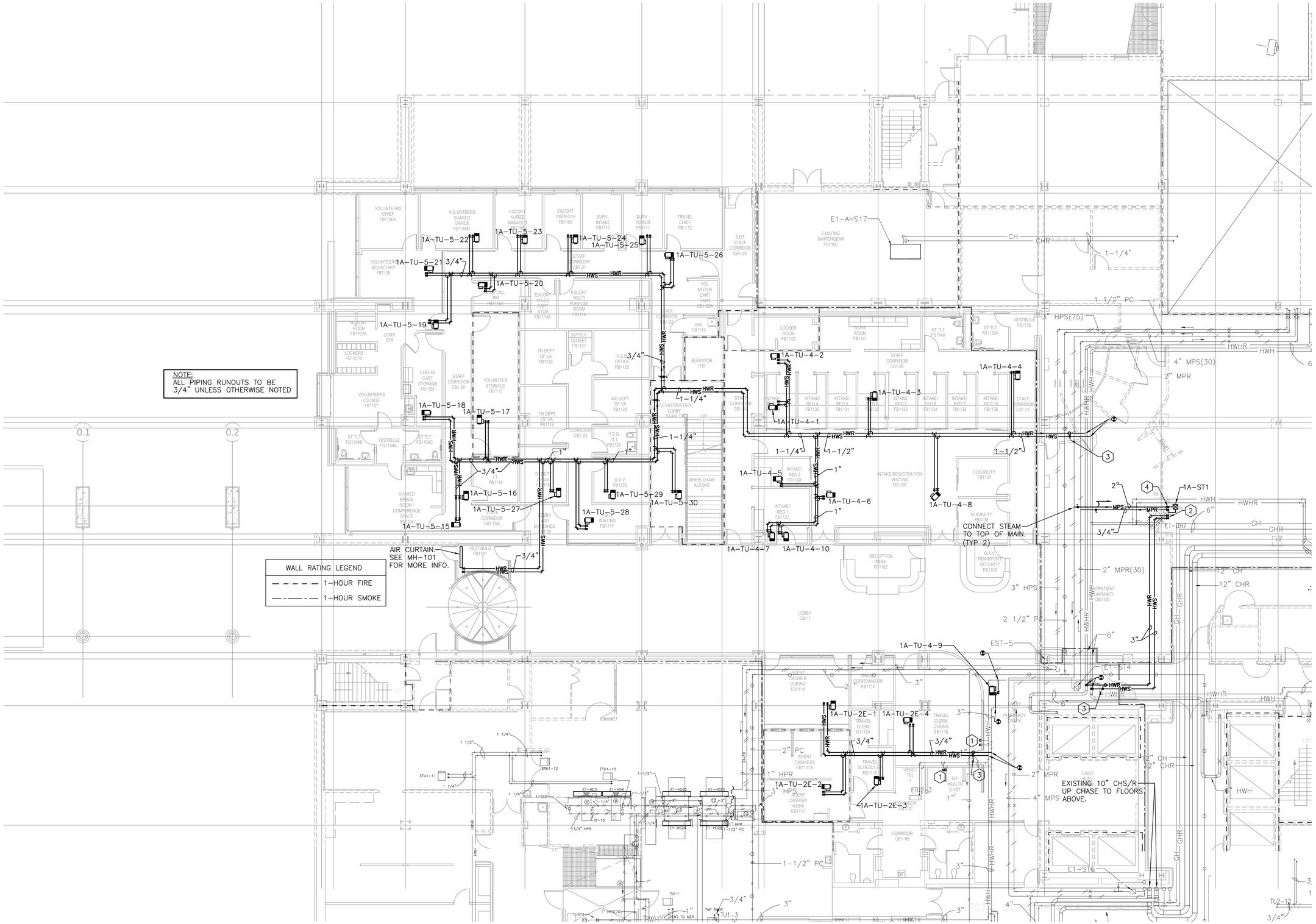

KEYNOTES

1. CAP EXISTING HWS/R PIPING CLOSE TO MAIN.
2. ROUTE NEW 3" HWS/R UP INTO EXISTING JANITOR CLOSET ALONG WALL. SEE SHEET MP-202 FOR CONTINUATION.
3. PROVIDE ISOLATION VALVE IN SUPPLY AND BALANCING VALVE WITH MEMORY STOP IN RETURN.
4. ROUTE NEW 2" MPS (30) AND 3/4" MPR UP INTO EXISTING JANITOR CLOSET ALONG WALL. SEE SHEET MP-202 FOR CONTINUATION.

GENERAL NOTES

1. ROUTE PIPING TIGHT TO STRUCTURE WHERE POSSIBLE.
2. COORDINATE ALL PIPING AND DUCTWORK AS REQUIRED.
3. REPAIR EXISTING CEILING AS REQUIRED FOR INSTALLATION OF NEW PIPING.

FULLY SPRINKLERED

Revisions:	Date:

CONSULTANTS:

Allen&Hoshall
engineering since 1915
1661 International Drive Memphis, TN 38120
901 820 0820 fax 901 683 1001
www.allenhoshall.com

SEAL:

MATTHEW GLYNN SINGLETON
REGISTERED ENGINEER
No. 115054
STATE OF TENNESSEE

ARCHITECT/ENGINEERS:

brg3s architects
11 W. Huling Avenue
Memphis, Tennessee 38103
t 901.260.9600
f 301.531.8042
w brg3s.com

DRAWING TITLE: PARTIAL GROUND FLOOR PIPING PLAN - NEW WORK
SCALE: 1/8"=1'-0"
APPROVED PROJECT DIRECTOR:

PROJECT TITLE: VA BUILDING 1A ENTRANCE EXPANSION
LOCATION: VAMC, Memphis, Tennessee
DATE: January 27, 2014
CHECKED: JRN
DRAWN: MGS

PROJECT NUMBER: 61660
BUILDING NUMBER: 1A
DRAWING NUMBER: MP-201
DWG. OF

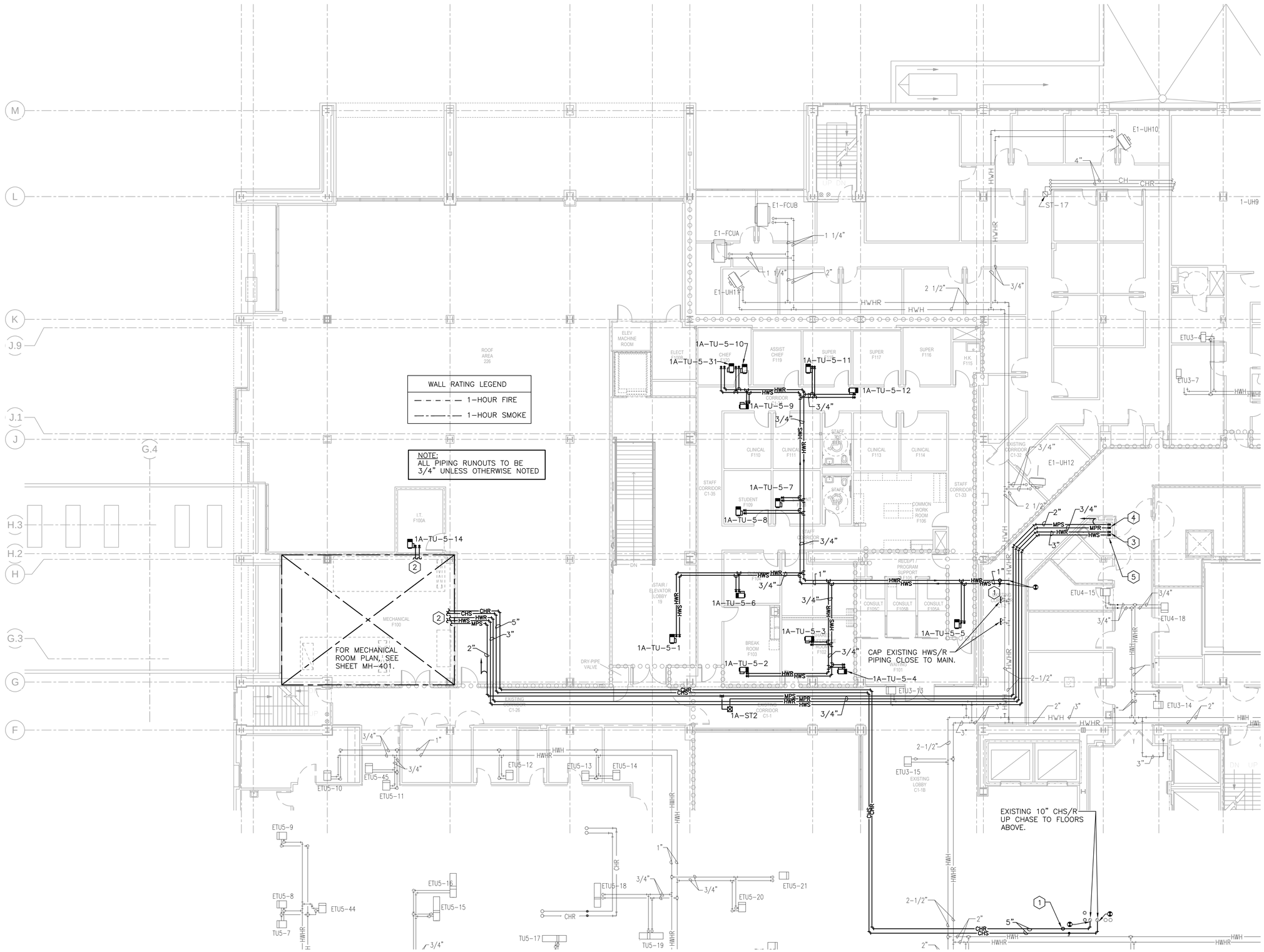

KEYNOTES

1. PROVIDE ISOLATION VALVE IN SUPPLY AND BALANCING VALVE WITH MEMORY STOP IN RETURN.
2. SEE SHEET MH-401 FOR CONTINUATION.
3. ROUTE NEW 3" HWS/R UP FROM GROUND FLOOR CEILING SPACE INTO EXISTING JANITOR CLOSET ALONG WALL. SEE SHEET MP-201 FOR CONTINUATION.
4. ROUTE NEW 2" MPS (30) AND 3/4" MPR UP FROM GROUND FLOOR CEILING SPACE INTO EXISTING JANITOR CLOSET ALONG WALL. SEE SHEET MP-201 FOR CONTINUATION.
5. PROVIDE 3" CONCRETE BASE AT PIPING PENETRATION THROUGH FLOOR. SEE SHEET MH-502 DETAIL #5 FOR LINK SEAL.

GENERAL NOTES

1. ROUTE PIPING TIGHT TO STRUCTURE WHERE POSSIBLE. PIPING SHALL BE MIN 9'-3" AFF.
2. COORDINATE ALL PIPING AND DUCTWORK AS REQUIRED.
3. REPAIR EXISTING CEILING AS REQUIRED FOR INSTALLATION OF NEW PIPING.

NORTH

FULLY SPRINKLERED

Revisions: Date:

CONSULTANTS:

Allen&Hoshall
engineering since 1915
1661 International Drive Memphis, TN 38120
901 820 0820 fax 901 683 1001
www.allenhoshall.com

SEAL:

MATTHEW GLYNN SINGLETON
REGISTERED ENGINEER
No. 115054
STATE OF TENNESSEE

ARCHITECT/ENGINEERS:

brg3s architects
11 W. Huling Avenue
Memphis, Tennessee 38103
t 901.260.9600
f 301.531.8042
w brg3s.com

DRAWING TITLE: PARTIAL FIRST FLOOR HVAC PIPING PLAN - NEW WORK
SCALE: 1/8"=1'-0"
APPROVED PROJECT DIRECTOR:

PROJECT TITLE: VA BUILDING 1A ENTRANCE EXPANSION
LOCATION: VAMC, Memphis, Tennessee
DATE: January 27, 2014
CHECKED: JRN
DRAWN: MGS

PROJECT NUMBER: 61660
BUILDING NUMBER: 1A
DRAWING NUMBER: MP-202
DWG. OF

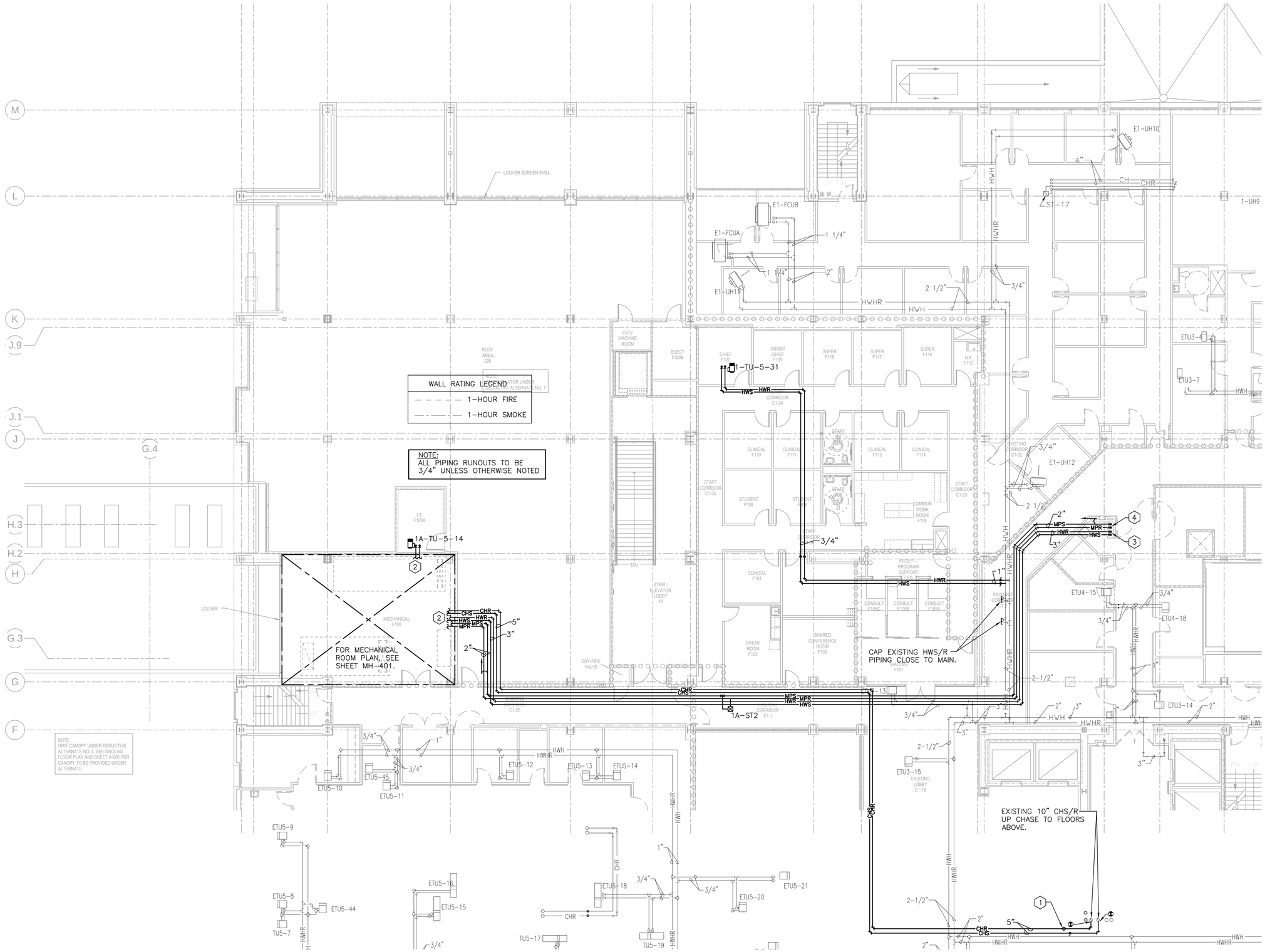

KEYNOTES

1. PROVIDE ISOLATION VALVE IN SUPPLY AND BALANCING VALVE WITH MEMORY STOP IN RETURN.
2. SEE SHEET MH-401 FOR CONTINUATION.
3. ROUTE NEW 3" HWS/R UP FROM GROUND FLOOR CEILING SPACE INTO EXISTING JANITOR CLOSET ALONG WALL. SEE SHEET MP-201 FOR CONTINUATION.
4. ROUTE NEW 2" MPS (30) AND 2" MPR UP FROM GROUND FLOOR CEILING SPACE INTO EXISTING JANITOR CLOSET ALONG WALL. SEE SHEET MP-201 FOR CONTINUATION.
5. PROVIDE 3" CONCRETE BASE AT PIPING PENETRATION THROUGH FLOOR. SEE SHEET MH-502 DETAIL #5 FOR LINK SEAL.

GENERAL NOTES

1. ROUTE PIPING TIGHT TO STRUCTURE WHERE POSSIBLE.
2. COORDINATE ALL PIPING AND DUCTWORK AS REQUIRED.

FULLY SPRINKLERED

Revisions:	Date:

CONSULTANTS:

Allen&Hoshall
engineering since 1915
1661 International Drive Memphis, TN 38120
901 820 0820 fax 901 683 1001
www.allenhoshall.com

SEAL:

ARCHITECT/ENGINEERS:

brg3s architects
11 W. Huling Avenue
Memphis, Tennessee 38103
t 901.260.9600
f 301.531.8042
w brg3s.com

DRAWING TITLE: PARTIAL FIRST FLOOR PIPING PLAN - NEW WORK - BID ALT 3
SCALE: 1/8"=1'-0"

APPROVED PROJECT DIRECTOR:

PROJECT TITLE: VA BUILDING 1A ENTRANCE EXPANSION

LOCATION: VAMC, Memphis, Tennessee

DATE: January 27, 2014 | CHECKED: JRN | DRAWN: MGS

PROJECT NUMBER: 61660

BUILDING NUMBER: 1A

DRAWING NUMBER: MP-202.1

DWG. OF

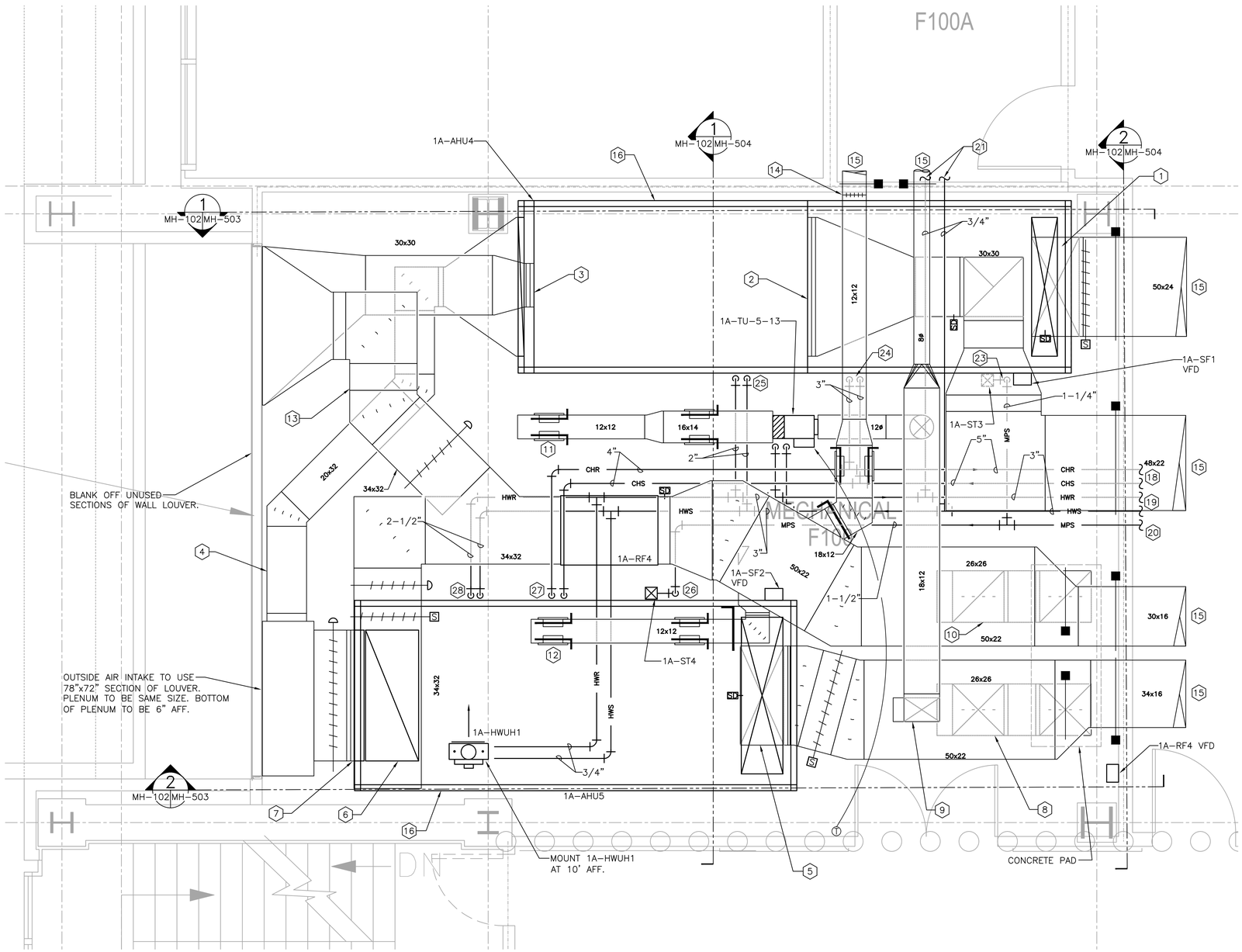

1 PARTIAL FIRST FLOOR MECH ROOM PLAN - NEW WORK
1/2"=1'-0"

KEYNOTES

1. PROVIDE FLEXIBLE CONNECTION AT FULL-SIZE AHU DISCHARGE. USE 90° MITERED ELBOW W/ VANES TO TRANSITION TO HORIZONTAL 46x16 SUPPLY DUCT.
2. TRANSITION FROM 30x30 EXHAUST DUCT TO FULL-SIZE AHU INLET AND PROVIDE FLEXIBLE CONNECTION AT AHU.
3. TRANSITION FROM FULL-SIZE AHU DISCHARGE TO 30x30 EXHAUST DUCT AND PROVIDE FLEXIBLE CONNECTION AT AHU. ROUTE DUCT ABOVE 1A-AHU4 OSA DUCT AND TRANSITION TO 80x48 FOR CONNECTION TO LOWER SECTION OF WALL LOUVER.
4. ROUTE 20x32 OA DUCT FROM OUTSIDE AIR PLENUM CLOSE TO FLOOR TO 1A-AHU4 AND TRANSITION TO FULL-SIZE AHU INLET WITH FLEXIBLE CONNECTION. ROUTE DUCT BELOW 1A-AHU4 EXHAUST DUCT.
5. PROVIDE FLEXIBLE CONNECTION AT FULL-SIZE AHU DISCHARGE. USE 90° MITERED ELBOW W/ VANES TO TRANSITION TO HORIZONTAL 50x22 SUPPLY DUCT.
6. PROVIDE FLEXIBLE CONNECTION AT FULL-SIZE AHU INLET. USE 90° MITERED TRANSITIONAL ELBOW W/ VANES TO TRANSITION FROM HORIZONTAL 34x32 RETURN DUCT.
7. PROVIDE FLEXIBLE CONNECTION AT FULL-SIZE AHU OA INLET. PROVIDE COMBINATION MOTORIZED DAMPER AND AIRFLOW MEASURING STATION ASSEMBLY EQUAL TO GREENHECK AMD-33. INSTALL AFMS/MD ASSEMBLY AS CLOSE TO OUTSIDE AIR PLENUM CONNECTION AS POSSIBLE.
8. PROVIDE BOOTED 26x26 TAKE-OFF DUCT FROM BOTTOM OF SUPPLY MAIN AND ROUTE TIGHT TO BOTTOM OF MAIN OVER TO WALL. ROUTE DUCT DOWN AS CLOSE TO IN-FLOOR STRUCTURAL BEAM AS PRACTICAL AND INTO GROUND FLOOR CEILING SPACE. PROVIDE FIRE DAMPER AND CONCRETE PAD AT MECHANICAL ROOM FLOOR PENETRATION. SEE SHEET MH-101 FOR CONTINUATION.
9. PROVIDE RECTANGULAR 18x12 TAKE-OFF FROM TOP OF MAIN. ROUTE CLOSE TO DECK AS SHOW.
10. PROVIDE BOOTED 26x26 TAKE-OFF DUCT FROM BOTTOM OF RETURN MAIN AND ROUTE TIGHT TO BOTTOM OF MAIN OVER TO WALL. ROUTE DUCT DOWN AS CLOSE TO IN-FLOOR STRUCTURAL BEAM AS PRACTICAL AND INTO GROUND FLOOR CEILING SPACE. PROVIDE FIRE DAMPER AND CONCRETE PAD AT MECHANICAL ROOM FLOOR PENETRATION. SEE SHEET MH-101 FOR CONTINUATION.
11. PROVIDE FOUR (4) DUCT-MOUNTED SUPPLY GRILLES AT 325 CFM EACH. SEE SUPPLY AIR DEVICE SCHEDULE, MARK 5, FOR DETAILED INFORMATION AND SIZING.
12. PROVIDE FOUR (4) DUCT-MOUNTED RETURN GRILLES AT 325 CFM EACH. SEE RETURN AIR DEVICE SCHEDULE, MARK 14, FOR DETAILED INFORMATION AND SIZING.
13. ROUTE 34x32 RELIEF DUCT FROM FAN 1A-RF4. ROUTE DUCT ABOVE 1A-AHU4 EXHAUST DUCT AND TRANSITION TO 80x60 FOR CONNECTION TO UPPER SECTION OF WALL LOUVER.
14. PROVIDE 9-GAUGE EXPANDED STEEL SECURITY GRILLE IN DUCT AT I.T. ROOM WALL PENETRATION. SEE VA PHYSICAL SECURITY MANUAL, SECTION 5.4. FOR DETAILS.
15. SEE SHEET MH-102 FOR CONTINUATION.
16. MOUNT NEW AHUs ON 6" BASE RAIL SECURED ONTO CONCRETE EQUIPMENT PAD.
17. NOT USED
18. ROUTE NEW 5" CHS/R PIPING INTO MECH ROOM AT THIS LOCATION. SEE SHEET MP-201 FOR CONTINUATION.
19. ROUTE NEW 3" HWS/R PIPING INTO MECH ROOM AT THIS LOCATION. SEE SHEET MP-201 FOR CONTINUATION.
20. ROUTE NEW 2" MED PRESSURE STEAM INTO MECH ROOM AT THIS LOCATION. SEE SHEET MP-201 FOR CONTINUATION.
21. SEE SHEET MP-202 FOR CONTINUATION.
22. NOT USED
23. PROVIDE 1-1/4" MEDIUM PRESSURE STEAM CONNECTION TO 1A-AHU4. PROVIDE INVERTED BUCKET TRAP AT HUMIDIFIER. SEE SHEET MH-601 FOR STEAM TRAP SCHEDULE. SEE PLUMBING DRAWINGS FOR CONDENSATE COOLER CONNECTION.
24. PROVIDE 3" CHS/R CONNECTIONS TO 1A-AHU4. SEE SHEET MH-502 FOR COIL CONNECTIONS DETAIL.
25. PROVIDE 2" HWS/R CONNECTIONS TO 1A-AHU4. SEE SHEET MH-502 FOR COIL CONNECTIONS DETAIL.
26. PROVIDE 1-1/4" MEDIUM PRESSURE STEAM CONNECTION TO 1A-AHU5. PROVIDE INVERTED BUCKET TRAP AT HUMIDIFIER. SEE SHEET MH-601 FOR STEAM TRAP SCHEDULE. SEE PLUMBING DRAWINGS FOR CONDENSATE COOLER CONNECTION.
27. PROVIDE 4" CHS/R CONNECTIONS TO 1A-AHU5. SEE SHEET MH-502 FOR COIL CONNECTIONS DETAIL.
28. PROVIDE 2-1/2" HWS/R CONNECTIONS TO 1A-AHU5. SEE SHEET MH-502 FOR COIL CONNECTIONS DETAIL.

WALL RATING LEGEND
— — — — — 1-HOUR FIRE
—·—·— 1-HOUR SMOKE

NOTE:
ALL PIPING RUNOUTS TO BE 3/4" UNLESS OTHERWISE NOTED

GENERAL NOTES

1. ROUTE DUCTWORK IN MECHANICAL ROOM TIGHT TO STRUCTURE WHERE POSSIBLE. SPACE IN ROOM IS LIMITED: ROUTE DUCTWORK AND PIPING WITH A MINIMUM OF ELBOWS.
2. AHUs SHALL BE INSTALLED WITH MANUFACTURER'S RECOMMENDATION MAINTENANCE CLEARANCES.
3. FLOOR SPACE IN ROOM IS VERY LIMITED: AHUs SHALL BE SELECTED TO MINIMIZE FOOTPRINT. MAINTAIN ALL RECOMMENDED CLEARANCES.

NORTH

FULLY SPRINKLERED

Revisions: Date:

CONSULTANTS:

Allen&Hoshall
engineering since 1915
1661 International Drive Memphis, TN 38120
901 820 0820 fax 901 683 1001
www.allenhoshall.com

SEAL:

MATTHEW GLYNN SINGLETON
REGISTERED ENGINEER
No. 115054
STATE OF TENNESSEE

ARCHITECT/ENGINEERS:

brg3s architects
11 W. Huling Avenue
Memphis, Tennessee 38103
t 901.260.9600
f 301.531.8042
w brg3s.com

DRAWING TITLE: PARTIAL FIRST FLOOR MECH. ROOM PLAN - NEW WORK
SCALE: 1/2"=1'-0"
APPROVED PROJECT DIRECTOR:

PROJECT TITLE: VA BUILDING 1A ENTRANCE EXPANSION
LOCATION: VAMC, Memphis, Tennessee
DATE: January 27, 2014
CHECKED: JRN
DRAWN: MGS

PROJECT NUMBER: 61660
BUILDING NUMBER: 1A
DRAWING NUMBER: MH-401
DWG. OF

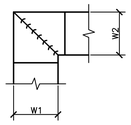

NOTE:

1. ALL VANE ELBOWS SHALL BE CONSTRUCTED AND INSTALLED AS DETAILED BY SMACNA.
2. WHEN W1 DOES NOT EQUAL W2, VANE SHALL BE SINGLE THICKNESS VANE TYPE REGARDLESS OF W DIMENSION.
3. ALL SINGLE THICKNESS VANES SHALL HAVE A 2" [50mm] RADIUS, 1 1/2" [40mm] MAXIMUM SPACE BETWEEN VANES AND A 3/4" [20mm] TRAILING EDGE.
4. WHEN W EQUALS W2 AND W1 IS GREATER THAN 20" [500mm] VANES SHALL BE DOUBLE VANE TYPE.

1 DUCTWORK SQUARE VANE ELBOWS

NTS

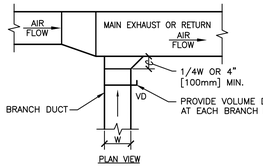

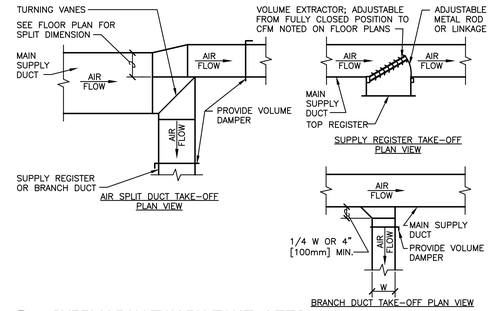

2 SUPPLY DUCTWORK TAKE-OFFS

NTS

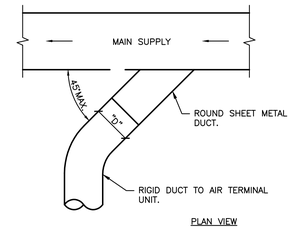

3 SUPPLY DUCT TAKEOFF - AIR TERMINAL UNIT

NTS

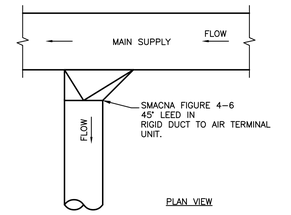

5 ALTERNATE SUPPLY DUCT TAKEOFF - AIR TERMINAL UNITS

NTS

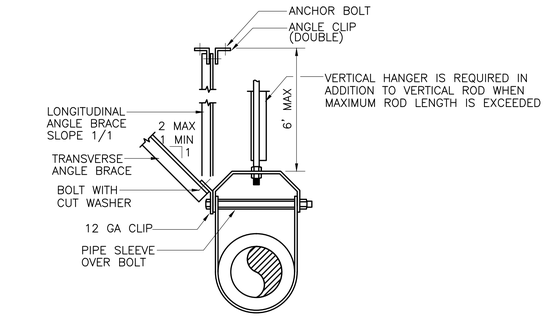

PIPE SIZE IN.	*ANGLE BRACE	BOLT TO ANGLE	ANGLE CLIP	ANCHOR BOLT OR INSERT	ROD SIZE	MAX. LENGTH FOR ROD	VERTICAL HANGER
2-1/2	2-1/2"x2-1/2" 16 GA	3/8	3"x3"x 1/4	3/8	1/2	25"	∠2"x2" 16 GA
3,4	2-1/2"x2-1/2" 16 GA	3/8	3"x3"x 1/4	1/2	5/8	25"	∠2"x2" 16 GA
5,6	2-1/2"x2-1/2" 12 GA	1/2	5"x3"x 1/2	3/4	3/4	31"	∠2-1/2"x2-1/2" 16 GA
8	3"x3" 12 GA	5/8	2-5x3x 1/2	2-5/8	7/8	43"	∠2-1/2"x2-1/2" 12 GA
10	3"x3" 12 GA	3/4	2-5x3x 1/2	2-3/4	7/8	43"	∠2-1/2"x2-1/2" 12 GA
*1-5/8x1-5/8 GA CHANNEL MAY BE USED.							

6 TYPICAL SEISMIC BRACING FOR PIPE

NTS

4 EXHAUST OR RETURN BRANCH DUCTWORK

NTS

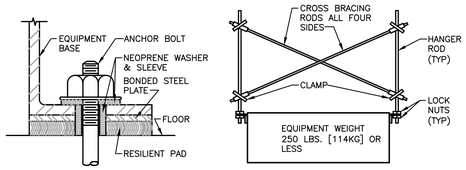

FLOOR MOUNT EQUIPMENT RESTRAINED BY RESILIENT PADS (TYPE DS)

SEISMIC BRACING FOR LIGHT SUSPENDED EQUIPMENT

NOTE:
NOT REQUIRED FOR AIR TERMINAL UNITS.

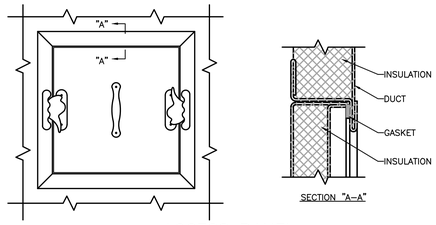

ACCESS PANEL

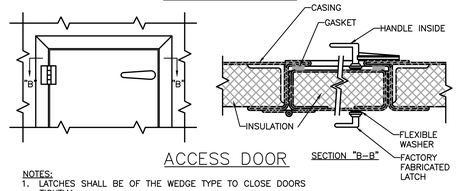

ACCESS DOOR

NOTES:
1. LATCHES SHALL BE OF THE WEDGE TYPE TO CLOSE DOORS TIGHTLY.
2. HINGES ON THE ACCESS DOORS SHALL HAVE NON-CORROSIVE PINS.
3. SEE SMACNA 2005, FIGURE 9-15

8 ACCESS PANEL AND DOOR DETAIL

NTS

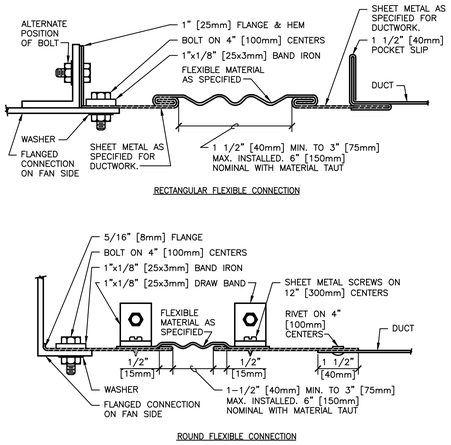

10 FLEXIBLE DUCT CONNECTIONS

NTS

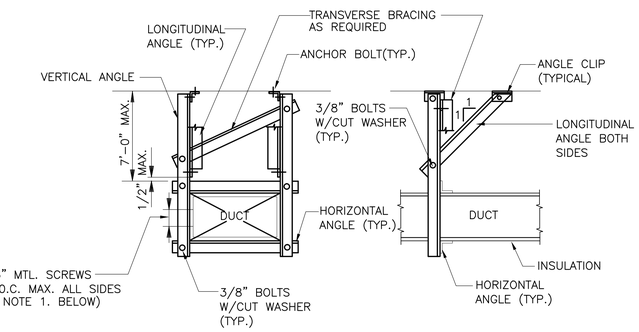

MAX. DUCT DIMENSION	BRACING ANGLES		ANGLE CLIP	CONC. ANCHOR OR INSERT
	VERTICAL	ALL OTHERS		
UP TO 60"	4x4x12GA	3x3x16GA	3x3x 1/4	1/2"
84"	4x4x 1/4"	4x4x12GA	4x4x 1/2	5/8"
96"	5x3x 1/4"	4x4x12GA	4x4x 1/2	5/8"

NOTES:

1. ROUND DUCT SUPPORTS SHALL BE SIMILAR, EXCEPT (1) 3/16" METAL SCREW ON EACH OF THE FOUR QUADRANTS.
2. DUCT SUPPORT INTERVALS SHALL BE AS FOLLOWS:
   TRANSVERSE SWAY BRACING: MAX. EVERY 30' O.C. EACH HORIZ. TURN GREATER THAN 45\, AND AT END OF EACH RUN.
   LONGITUDINAL SWAY BRACING: MAX. EVERY 60" O.C.
3. TRANSVERSE BRACING MAY SERVE AS HORZ. BRACING OF PERPENDICULAR INTERSECTING DUCTS IF INSTALLED WITHIN 4' OF INTERSECTION AND SIZED FOR LARGER DUCT.
4. WALLS WHICH DUCTS PENETRATE MAY SERVE AS TRANSVERSE BRACING.
5. BOLT SIZE SHALL BE 1/4" UP TO 54" DUCT SIZE AND 3/8" FOR 54 " AND GREATER DUCT SIZE.

13 TYPICAL SEISMIC BRACING FOR RECTANGULAR DUCT

NTS

7 SEISMIC BRACING FOR EQUIPMENT

NTS

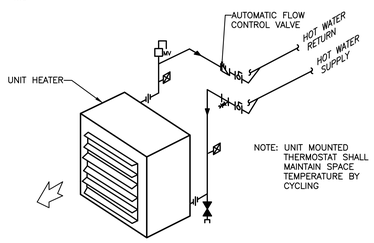

9 UNIT HEATERS (HOT WATER) - PIPING CONNECTIONS

NTS

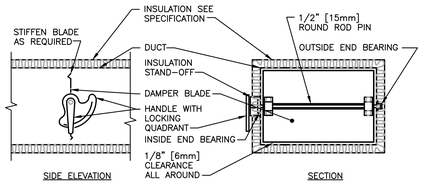

NOTE:

1. DELETE INSULATION STAND-OFF ON DUCTWORK WITHOUT EXTERIOR INSULATION.
2. DETAIL SHOWS SINGLE BLADE DAMPER. DAMPER INSTALLATION SHALL BE SIMILAR FOR MULTI-BLADE DAMPERS & ROUND DAMPERS.

11 VOLUME DAMPER DETAIL

NTS

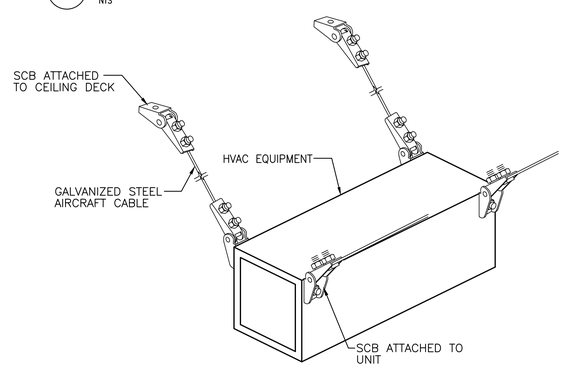

12 TYP. SEISMIC BRACING FOR LIGHT SUSPENDED EQUIP.

NTS

FULLY SPRINKLERED

Revisions:	Date:

CONSULTANTS:

Allen&Hoshall
engineering since 1915
1661 International Drive Memphis, TN 38120
901 820 0820 fax 901 683 1001
www.allenhoshall.com

SEAL:

MATTHEW GLYNN SINGLETON
REGISTERED ENGINEER
No. 115054
STATE OF TENNESSEE

ARCHITECT/ENGINEERS:

brg3s architects
11 W. Huling Avenue
Memphis, Tennessee 38103
t 901.260.9600
f 301.531.8042
w brg3s.com

DRAWING TITLE: MECHANICAL DETAILS AND NOTES
SCALE: N/A
APPROVED PROJECT DIRECTOR:

PROJECT TITLE: VA BUILDING 1A ENTRANCE EXPANSION
LOCATION: VAMC, Memphis, Tennessee
DATE: January 27, 2014
CHECKED: JRN
DRAWN: MGS

PROJECT NUMBER: 61660
BUILDING NUMBER: 1A
DRAWING NUMBER: MH-501
DWG. OF

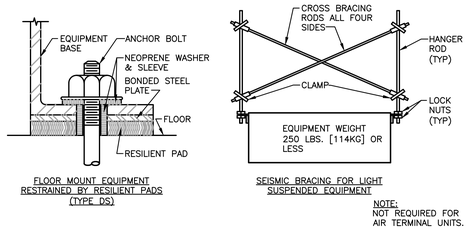

FLOOR MOUNT EQUIPMENT RESTRAINED BY RESILIENT PADS (TYPE DS)

SEISMIC BRACING FOR LIGHT SUSPENDED EQUIPMENT

NOTE:
NOT REQUIRED FOR AIR TERMINAL UNITS.

1 SEISMIC BRACING FOR EQUIPMENT

NTS

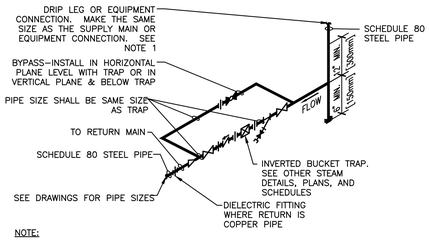

NOTE:

1. ALL DRIP POINTS ON STEAM MAINS SHALL BE PROVIDED WITH A 12" MINIMUM HIGH DRIP LEG FROM BOTTOM OF STEAM MAIN TO TRAP INLET. DRIP LEG SHALL HAVE 6" SCALE POCKET BELOW TRAP INLET.
2. PROVIDE BYPASS PIPING.

2 INVERTED BUCKET STEAM TRAP ASSEMBLY

NTS

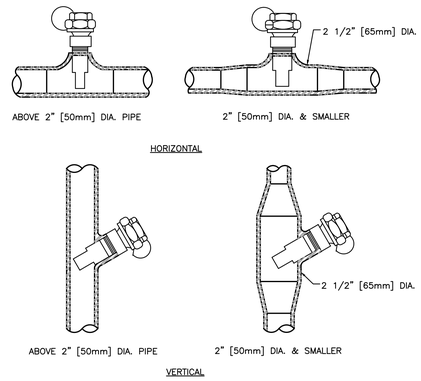

3 INSTALLATION OF THERMOMETER WELLS

NTS

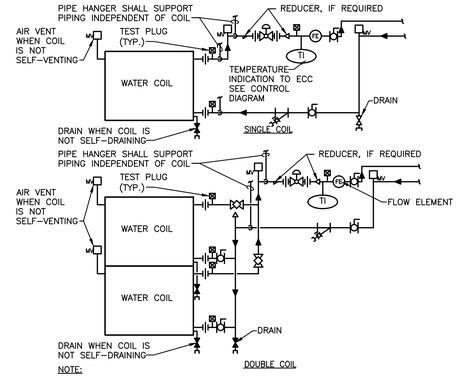

NOTE:

1. WHEN COIL IS INCLUDED IN CASING MOUNTED ON VIBRATION ISOLATORS THE FIRST 2 HANGERS FOR EACH PIPE SHALL BE SPRING & NEOPRENE TYPE. TYPE "H" FOR 4" [100mm]ø PIPE & SMALLER. TYPE "H–P" FOR 5" [125mm]ø PIPE & LARGER.
2. PIPING SHALL BE INSTALLED IN SUCH MANNER THAT IT WILL NOT BLOCK THE SWING OR USE OF ACCESS DOORS OR PANELS; NEITHER SHALL IT BLOCK THE SERVICING OF FILTERS, VALVES, OR EQUIPMENT.
3. THE FLOW ELEMENT MAY BE INSTALLED IN THE SUPPLY PIPING IF THE REQUIRED MINIMUM UPSTREAM AND DOWNSTREAM DIMENSIONS CANNOT BE OBTAINED IN THE RETURN PIPING.

4 WATER COILS - PIPING CONNECTIONS

NTS

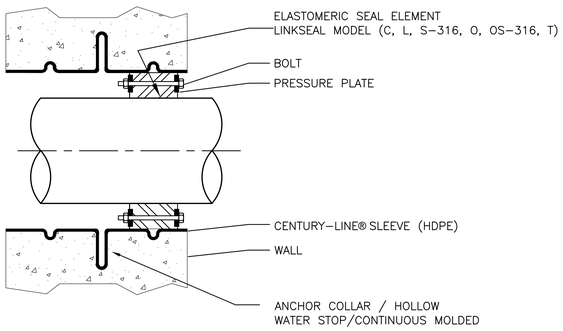

5 LINK SEAL DETAIL

NTS

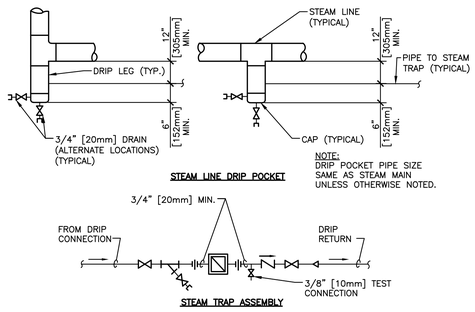

STEAM LINE DRIP POCKET

NOTE:
DRIP POCKET PIPE SIZE SAME AS STEAM MAIN UNLESS OTHERWISE NOTED.

STEAM TRAP ASSEMBLY

6 STEAM LINE DRIP POCKET STEAM TRAP ASSEMBLY

NTS

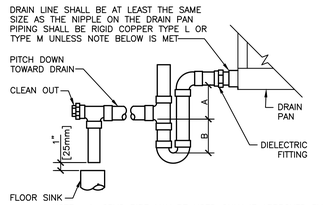

NOTE: 1. CPVC PIPE MAY BE USED ONLY IF APPROVED BY LOCAL VA AND IS INDOORS AND DOES NOT PASS THROUGH RATED BARRIERS.
2. DIELECTRIC FITTING TO BE USED WHEN TWO DISSIMILAR METALS ARE TO BE CONNECTED.

UNIT TYPE	A	B
DRAW THRU	2" [50mm] PLUS X	X
BLOW THRU	1" [25mm] MINIMUM	2X

WHERE X = STATIC PRESSURE IN PAN

7 AIR HANDLING UNIT DRAIN TRAP DETAIL

NTS

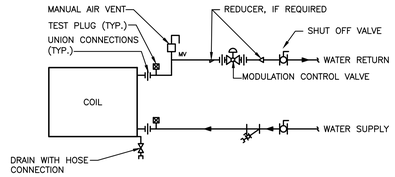

8 TERMINAL UNIT WATER COILS - PIPING CONNECTIONS

NTS

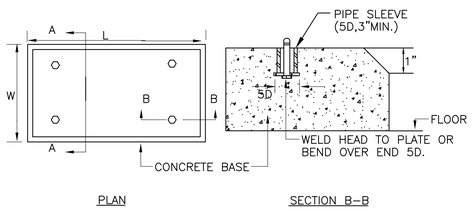

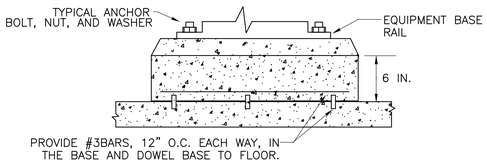

SECTION A–A (BASE NOT POURED WITH FLOOR SLAB)

NOTES:

1. L AND W DIMENSIONS SHALL BE 6 INCHES GREATER THAN THE EQUIPMENT BASE RAIL.
2. CONCRETE SHALL BE 3000 PSI CONCRETE.

9 CONCRETE EQUIPMENT PAD DETAIL

NTS

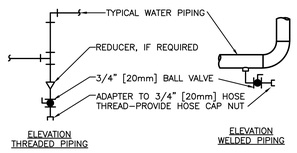

TYPICAL CHILLED AND HOT WATER PIPING DRAIN VALVE CONNECTIONS

NOTES:
1. DRAIN ALL LOW POINTS AS INDICATED ABOVE.
2. WHERE SCALE POCKETS ARE SHOWN ON PIPE RISER DIAGRAMS AND/OR PLANS LOCATE DRAIN AT BOTTOM OF SCALE POCKET.

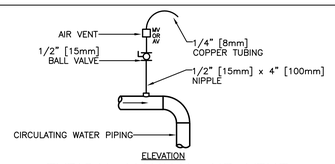

TYPICAL MANUAL AIR VENT

NOTES:
1. VENT ALL HIGH POINTS INDICATED ABOVE.
2. IF AUTOMATIC AIR VENTS ARE USED, PIPE DISCHARGE TO DRAIN.

9 DRAIN VALVE AND AIR VENT CONNECTIONS (HYDRONIC SYSTEMS)

NTS

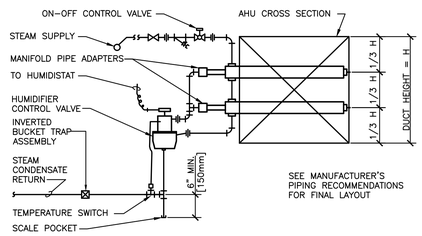

9 STEAM HUMIDIFIER - DISPERSION TUBE CONNECTIONS

NTS

FULLY SPRINKLERED

Revisions:	Date:

CONSULTANTS:

Allen&Hoshall
engineering since 1915
1661 International Drive Memphis, TN 38120
901 820 0820 fax 901 683 1001
www.allenhoshall.com

SEAL:

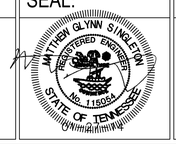

ARCHITECT/ENGINEERS:

brg3s architects
11 W. Huling Avenue
Memphis, Tennessee 38103
t 901.260.9600
f 301.531.8042
w brg3s.com

DRAWING TITLE: MECHANICAL DETAILS AND NOTES
SCALE: N/A
APPROVED PROJECT DIRECTOR:

PROJECT TITLE: VA BUILDING 1A ENTRANCE EXPANSION
LOCATION: VAMC, Memphis, Tennessee
DATE: January 27, 2014
CHECKED: JRN
DRAWN: MGS

PROJECT NUMBER: 61660
BUILDING NUMBER: 1A
DRAWING NUMBER: MH-502
DWG. OF

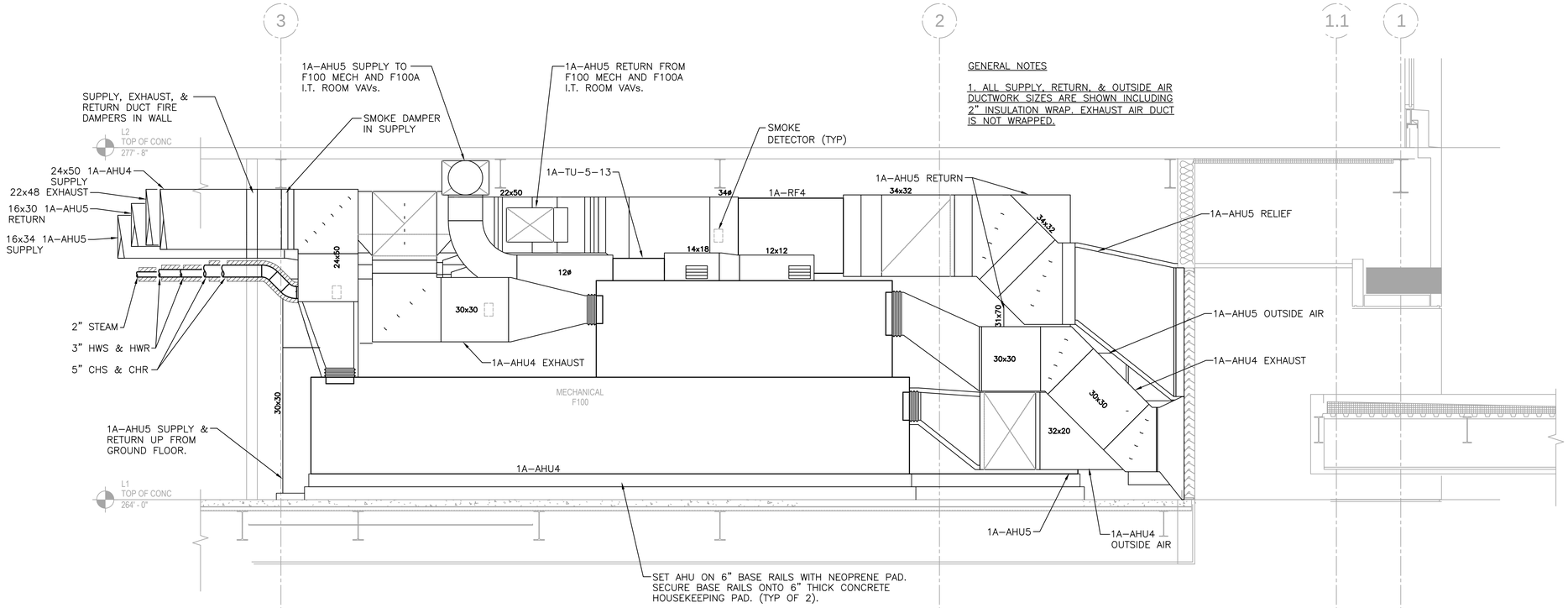

GENERAL NOTES

1. ALL SUPPLY, RETURN, & OUTSIDE AIR DUCTWORK SIZES ARE SHOWN INCLUDING 2" INSULATION WRAP. EXHAUST AIR DUCT IS NOT WRAPPED.

1 MECH ROOM NORTH SECTION VIEW

1/2" = 1'-0"

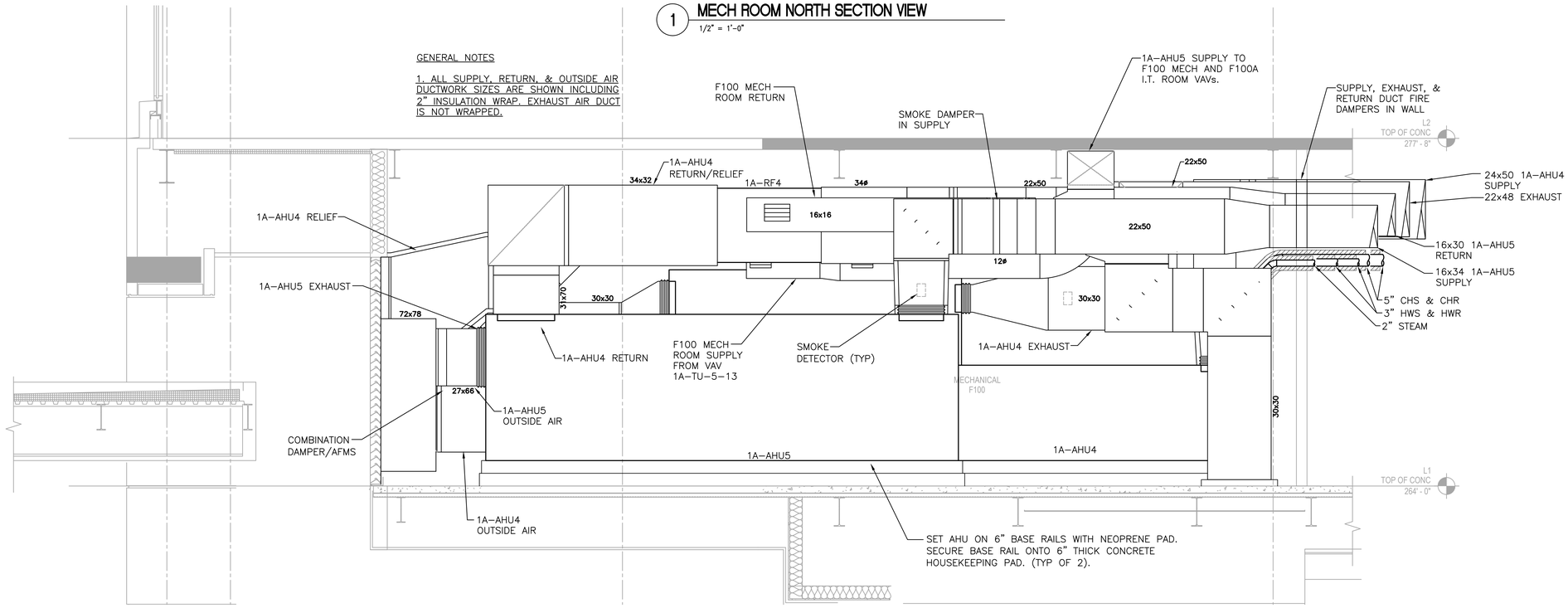

GENERAL NOTES

1. ALL SUPPLY, RETURN, & OUTSIDE AIR DUCTWORK SIZES ARE SHOWN INCLUDING 2" INSULATION WRAP. EXHAUST AIR DUCT IS NOT WRAPPED.

2 MECH ROOM SOUTH SECTION VIEW

1/2" = 1'-0"

FULLY SPRINKLERED

Revisions:	Date:

CONSULTANTS:

Allen&Hoshall
engineering since 1915
1661 International Drive Memphis, TN 38120
901 820 0820 fax 901 683 1001
www.allenhoshall.com

SEAL:

MATTHEW GLYNN SINGLETON
REGISTERED ENGINEER
No. 115094
STATE OF TENNESSEE

ARCHITECT/ENGINEERS:

brg3s architects
11 W. Huling Avenue
Memphis, Tennessee 38103
t 901.260.9600
f 301.531.8042
w brg3s.com

DRAWING TITLE: MECHANICAL DETAILS AND NOTES - MECH ROOM SECTION VIEWS
SCALE: N/A
APPROVED PROJECT DIRECTOR:

PROJECT TITLE: VA BUILDING 1A ENTRANCE EXPANSION
LOCATION: VAMC, Memphis, Tennessee
DATE: January 27, 2014
CHECKED: JRN
DRAWN: MGS

PROJECT NUMBER: 61660
BUILDING NUMBER: 1A
DRAWING NUMBER: MH-503
DWG. OF

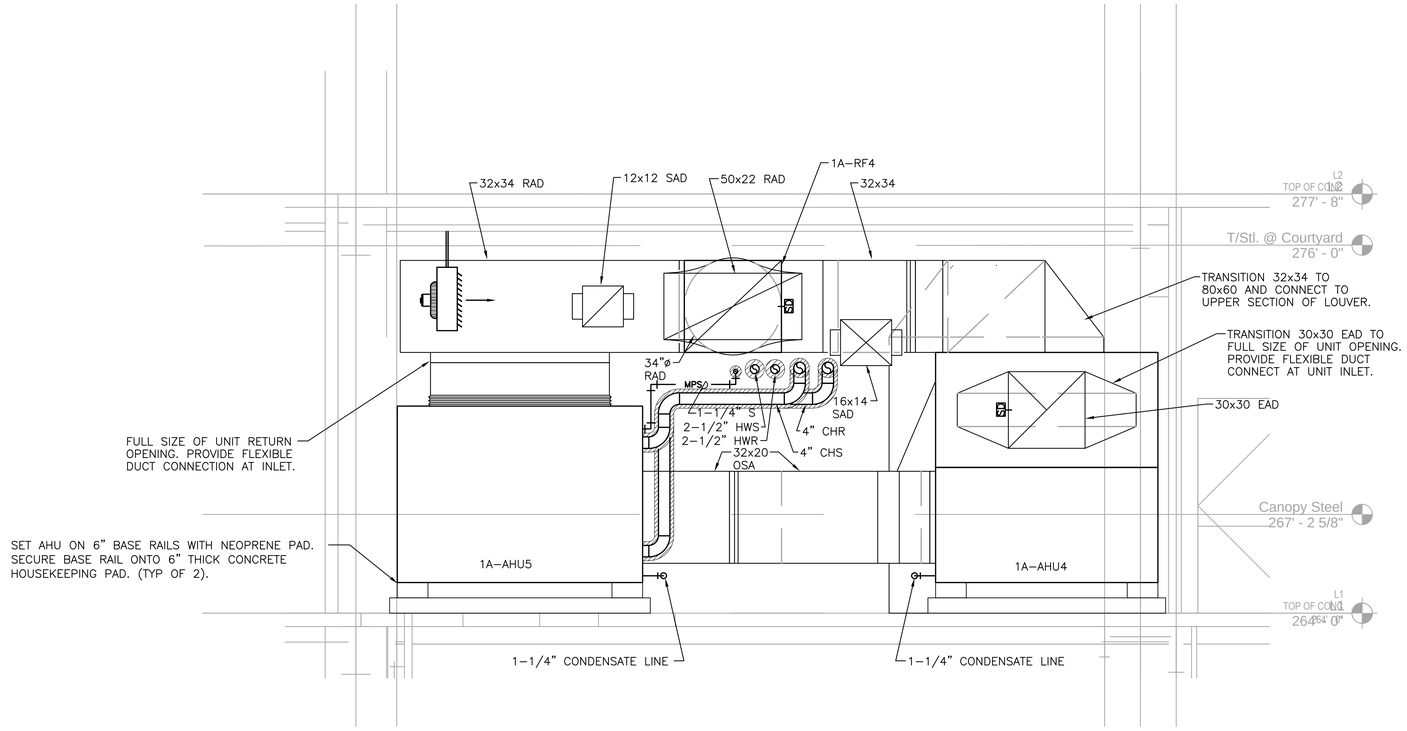

1 MECH ROOM WEST SECTION VIEW

1/2" = 1'-0"

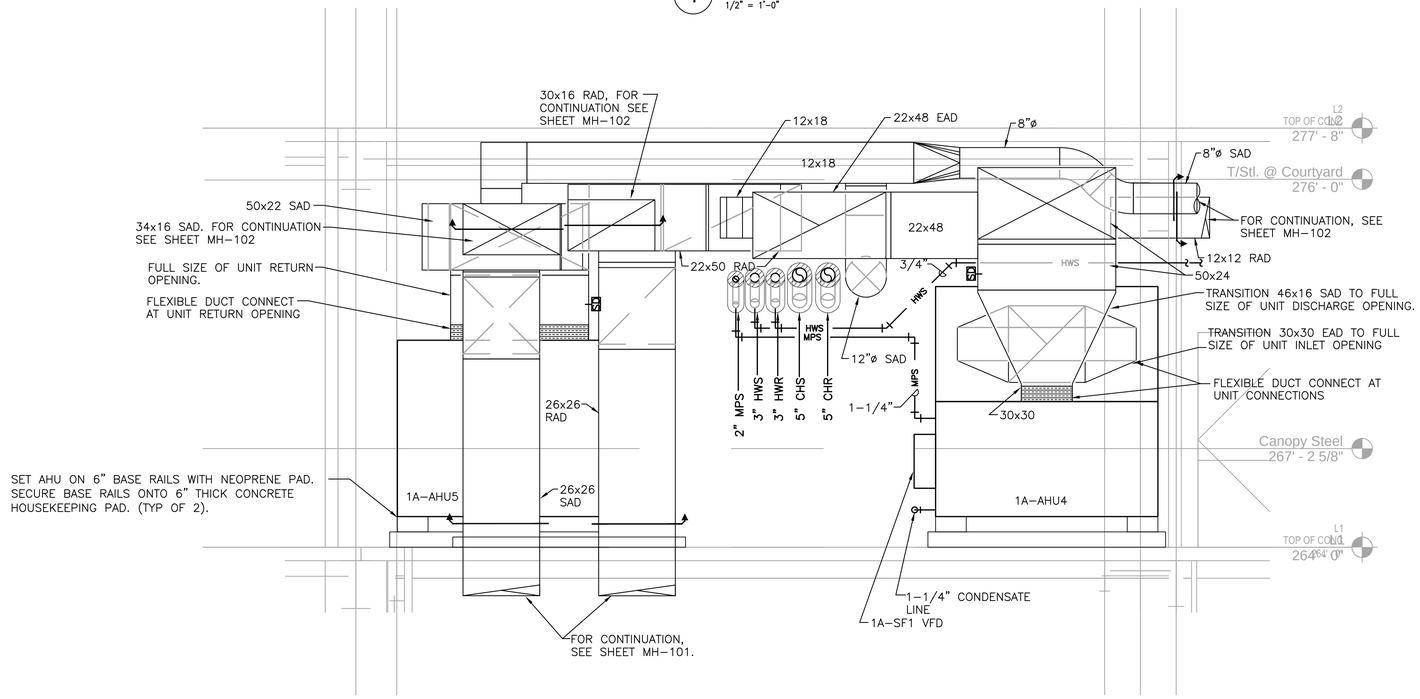

2 MECH ROOM EAST SECTION VIEW

1/2" = 1'-0"

FULLY SPRINKLERED

Revisions:	Date:

CONSULTANTS:

Allen&Hoshall
engineering since 1915
1661 International Drive Memphis, TN 38120
901 820 0820 fax 901 683 1001
www.allenhoshall.com

SEAL:

MATTHEW GLYNN SINGLETON
REGISTERED ENGINEER
No. 115004
STATE OF TENNESSEE

ARCHITECT/ENGINEERS:

brg3s architects
11 W. Huling Avenue
Memphis, Tennessee 38103
t 901.260.9600
f 301.531.8042
w brg3s.com

DRAWING TITLE: MECHANICAL DETAILS AND NOTES - MECH ROOM SECTION VIEWS
SCALE: N/A
APPROVED PROJECT DIRECTOR:

PROJECT TITLE: VA BUILDING 1A ENTRANCE EXPANSION
LOCATION: VAMC, Memphis, Tennessee
DATE: January 27, 2014
CHECKED: JRN
DRAWN: MGS

PROJECT NUMBER: 61660
BUILDING NUMBER: 1A
DRAWING NUMBER: MH-504
DWG. OF

HVAC DESIGN DATA

DESIGN CONDITIONS	SUMMER TEMP °F	SUMMER TEMP [°C]	SUMMER WET BULB TEMP °F	SUMMER WET BULB TEMP [°C]	SUMMER % HUMIDITY	WINTER TEMP °F	WINTER TEMP [°C]	WINTER DEWPOINT TEMP °F	WINTER DEWPOINT TEMP [°C]	WINTER % HUMIDITY	LOWEST AVERAGE ANNUAL DEWPOINT °F	LOWEST AVERAGE ANNUAL DEWPOINT [°C]
OUTDOOR DESIGN CONDITIONS	98	[37]	80	[27]	46	10	[-12]	4	[-16]	NA	4	[-16]
INDOOR AREA DESIGN CONDITIONS												
ALL SPACES	75	[24]	58	[14]	50	75	[24]	41	[5]	30		

HOT WATER HEATING COIL SCHEDULE

MARK	LOCATION	AREA AND/OR BLDG SERVED	SYSTEM AND/OR SERVICE	APPLICATION	AIR FLOW CFM	AIR FLOW [L/s]	MAX FACE VELOCITY FPM	MAX FACE VELOCITY [M/s]	APD IN WG	APD [Pa]	TEMPERATURES EAT °F	EAT [°C]	LAT °F	LAT [°C]	TOTAL MIN CAPACITY MBH	TOTAL MIN CAPACITY [kW]	HOT WATER FLOW GPM	FLOW [L/s]	EWT °F	EWT [°C]	LWT °F	LWT [°C]	WPD FT	WPD [kPa]	% GLYCOL	REMARKS
1A-HW1	F100	GF INTAKE/ LOBBY	1A-AHU4	PREHEAT	9,900	[4700]	500	[3]	0.06	[15]	54.5	[13]	82.8	[28]	267	[910]	27.4	[2]	180	[82]	160	[71]	2.8	[8]	0	---
1A-HW2	F100	1F INFILL/ GF OFFICES	1A-AHU5	PREHEAT	16,400	[7700]	500	[3]	0.06	[15]	51	[11]	76.8	[25]	459	[1600]	47.2	[3]	180	[82]	160	[71]	3.3	[10]	0	---

CHILLED WATER COOLING COIL SCHEDULE

MARK	LOCATION	AREA AND/OR BLDG SERVED	SYSTEM AND/OR SERVICE	AIR FLOW CFM	AIR FLOW [L/s]	MAX FACE VELOCITY FPM	MAX FACE VELOCITY [M/s]	APD IN WG	APD [Pa]	EAT Db °F	EAT Db [°C]	EAT Wb °F	EAT Wb [°C]	LAT Db °F	LAT Db [°C]	LAT Wb °F	LAT Wb [°C]	TOTAL CAPACITY MBH	TOTAL CAPACITY [kW]	SENSIBLE CAPACITY MBH	SENSIBLE CAPACITY [kW]	CHILLED WATER FLOW GPM	FLOW [L/s]	EWT °F	EWT [°C]	LWT °F	LWT [°C]	WPD FT	WPD [M]	REMARKS
1A-CC1	F100	GF INTAKE/ LOBBY	1A-AHU4	9,900	[4700]	500	[3]	0.73	[180]	81.5	[28]	68.7	[20]	51.4	[11]	51.3	[11]	448	[130]	281	[82]	88.4	[6]	45	[7]	55.1	[13]	4.3	[1]	-----
1A-CC2	F100	1F INFILL/ GF OFFICES	1A-AHU5	16,400	[7700]	500	[3]	1.06	[270]	81	[27]	68	[20]	52	[11]	51.8	[11]	812	[240]	530	[160]	162.4	[10]	45	[7]	55	[13]	10.8	[3]	-----

NOTE

THE COOLING COIL FIN SPACING SHALL NOT EXCEED 132 FINS PER FOOT [400 FINS PER METER].

AIR FILTER SCHEDULE

MARK	LOCATION	AREA AND/OR BLDG SERVED	SYSTEM AND/OR SERVICE	MERV RATING	AIR FLOW CFM	AIR FLOW [L/s]	APD INITIAL IN	APD INITIAL [mm]	APD CHANGEOVER IN	APD CHANGEOVER [mm]	HOUSING TYPE	CARTRIDGES #	CARTRIDGES SIZE IN	CARTRIDGES SIZE [mm]	ARRANGEMENT	REMARKS
1A-PFE1	F100	GF INTAKE/LOBBY	1A-AHU4 EXHAUST	8	9,450	[4500]	0.35	[9]	0.35	[9]	SIDE SERVICE	3/3	24 x 24 x 2/ 24 x 12 x 2	[610 x 610 x 51)/ [610 x 305 x 51]	3 WIDE BY 2 HIGH	----
1A-PFS2	F100	GF INTAKE/LOBBY	1A-AHU4 SUPPLY	8	9,900	[4700]	0.32	[8]	0.32	[8]	SIDE SERVICE	3/3	24 x 24 x 2/ 24 x 12 x 2	[610 x 610 x 51)/ [610 x 305 x 51]	3 WIDE BY 2 HIGH	----
1A-FFS3	F100	GF INTAKE/LOBBY	1A-AHU4 SUPPLY	14	9,900	[4700]	0.55	[14]	0.55	[14]	SIDE SERVICE	3/3	24 x 24 x 2/ 24 x 12 x 2	[610 x 610 x 51)/ [610 x 305 x 51]	3 WIDE BY 2 HIGH	----
1A-PFS4	F100	1F INFILL/ GF OFFICES	1A-AHU5 SUPPLY	8	16,400	[7700]	0.19	[5]	0.19	[5]	SIDE SERVICE	12/4	24 x 20 x 18/ 16 x 20 x 18	[610 x 508 x 457)/ [407 x 508 x 457]	4 WIDE BY 4 HIGH	----

AIR HANDLING UNIT SCHEDULE

MARK	LOCATION	AREA AND/OR BLDG SERVED	TYPE	AIR FLOW	AIR FLOW SUPPLY CFM	AIR FLOW SUPPLY [L/s]	AIR FLOW MIN OA CFM	AIR FLOW MIN OA [L/s]	AIR FLOW RETURN CFM	AIR FLOW RETURN [L/s]	SUPPLY FAN MARK	RETURN OR RELIEF FAN MARK	EXHAUST FAN MARK	PREFILTER MARK	AFTER FILTER MARK	FINAL FILTER MARK	HEAT RECOVERY MARK	PREHEAT COIL MARK	COOLING COIL MARK	REHEAT COIL	HUMIDIFIER MARK	REMARKS
1A-AHU4	F100	GF INTAKE/ LOBBY	100% OSA W HRC	VAV	9,900	[4700]	9,900	[4700]	9,450	[4500]	1A-SF1	N/A	1A-EF3	1A-PFE1/ 1A-PFS2	N/A	1A-FFS3	SEE NOTES	1A-HW1	1A-CC1	N/A	1A-HUM2	1, 2, 4
1A-AHU5	F100	1F INFILL/ GF OFFICES	AIR HANDLER	VAV	16,400	[7700]	4,100	[1900]	12,300	[5800]	1A-SF2	1A-RF4	N/A	1A-PFS4	N/A	N/A	N/A	1A-HW2	1A-CC2	N/A	1A-HUM2	1, 3

1. AHU TO BE EQUAL TO JCI/YORK SOLUTION SERIES.
2. PROVIDE VARIABLE FREQUENCY DRIVE FOR SUPPLY AND EXHAUST FANS.
3. PROVIDE VARIABLE FREQUENCY DRIVE FOR SUPPLY FAN.
4. PROVIDE HEAT RECOVERY SECTION WITH MOLECULAR SIEVE 4A STYLE ENTHALPY WHEEL EQUAL TO NOVELAIRE ECW. POLYMER ENERGY WHEEL EQUAL TO AIRXCHANGE NOT ACCEPTABLE. UNIT MAXIMUM LENGTH TO BE 280". SEE ENERGY RECOVERY SCHEDULE FOR PERFORMANCE DETAILS.

FAN SCHEDULE

MARK	LOCATION	AREA AND/OR BLDG SERVED	SYSTEM AND/OR SERVICE	AIR FLOW CFM	AIR FLOW [L/s]	TSP IN	TSP [Pa]	FAN TYPE	WHEEL	CLASS	ARRANGEMENT, ROTATION, AND DISCHARGE	DIAMETER IN	DIAMETER [mm]	MIN % EFF	DRIVE	FAN MAX. RPM	MOTOR ELECTRICAL NOMINAL POWER BHP	NOMINAL POWER HP	NOMINAL POWER [kW]	PHASE	VOLT	RPM	SPEED CONTROL	CONTROL SEQUENCE	REMARKS
1A-SF1	MECH RM	GF INTAKE/ LOBBY	1A-AHU4 SUPPLY	9,900	[4700]	7.0	[1800]	CENTRIFUGAL	AIRFOIL	II	FRONT INLET/ REAR DISCHARGE	18	[450]	93%	BELT	2581	14.68	20	[15]	3	460	1800	VARIABLE	VFD	5, 6
1A-SF2	MECH RM	1F INFILL/ GF OFFICES	1A-AHU5 SUPPLY	16,400	[7700]	4.49	[1100]	CENTRIFUGAL	AIRFOIL	II	FRONT INLET/ REAR DISCHARGE	22	[550]	94%	BELT	1898	19.6	25	[19]	3	460	1800	VARIABLE	VFD	6
1A-EF3	MECH RM	GF INTAKE/ LOBBY	1A-AHU4 EXHAUST	9,450	[4500]	4.8	[1200]	CENTRIFUGAL	AIRFOIL	I	FRONT INLET/ REAR DISCHARGE	18	[450]	93%	BELT	2316	11.76	15	[11]	3	460	1800	CONSTANT	INTERLOCK WITH 1A-SF1	5
1A-RF4	MECH RM	1F INFILL/ GF OFFICES	1A-AHU5 RETURN	12,300	[5800]	2.5	[630]	CENTRIFUGAL	MIXED FLOW	I	INLINE	27	[680]	71%	BELT	1196	6.99	7.5	[6]	3	460	1725	VARIABLE	VFD INTERLOCK WITH 1A-AHU5	1, 2, 3, 4, 6

NOTE

ALL SELECTIONS ARE BASED ON AN ALTITUDE OF 0.

1. PROVIDE RETURN FAN EQUAL TO GREENHECK MODEL QEI–27–I OR APPROVED EQUAL. INTERLOCK WITH 1A–AHU5.
2. PROVIDE VARIABLE FREQUENCY DRIVE EQUAL TO ABB OR DANFOSS GRAHAM. VFD SHALL TRACK WITH 1A–AHU5.
3. FAN SHALL BE SUSPENDED FROM FACTORY BASE RAIL. SUPPORT BASE RAIL FROM SEISMIC SPRING ISOLATORS WITH MINIMUM 1.5" DEFLECTION.
4. FAN MOTOR SHALL BE LOCATED BELOW FAN.
5. INTERLOCK 1A–AHU4 SUPPLY AND EXHAUST FANS.
6. PROVIDE VARIABLE FREQUENCY DRIVE EQUAL TO ABB OR DANFOSS GRAHAM.

HOT WATER UNIT HEATER SCHEDULE

MARK	LOCATION	AREA AND/OR BLDG SERVED	TYPE UNIT	AIR FLOW CFM	AIR FLOW [L/s]	MIN CAPACITY BTUH	MIN CAPACITY [W]	TEMPERATURES EAT °F	EAT [°C]	EWT °F	EWT [°C]	FLOW GPM	FLOW [L/s]	WPD FT	WPD [Pa]	CONTROL SEQUENCE	MOTOR POWER HP	MOTOR POWER [W]	PHASE	VOLT	RPM	REMARKS
1A-HWUH1	F100	MECH ROOM	CLG HUNG HORIZONTAL	630	[300]	21,700	[6400]	60	[16]	180	[82]	2.4	0.15	0.2	[5]	ROOM T-STAT	0.04	[30]	1	120	1550	EQUAL TO MODINE HC-33

STEAM HUMIDIFER SCHEDULE

MARK	LOCATION	SYSTEM AND/OR SEVICE	HUMIDIFIER TYPE	AIR FLOW CFM	AIR FLOW [L/s]	HUMIDIFIER LOAD LBS/HR	# OF MANIFOLDS	EAT Db °F	EAT Db [°C]	EAT Wb °F	EAT Wb [°C]	EAT DEWPOINT °F	EAT DEWPOINT [°C]	LAT DEWPOINT °F	LAT DEWPOINT [°C]	SOURCE	BLDG. STEAM PRESS PSIG	BLDG. STEAM PRESS [kPa]	BLDG. STEAM ENT HUMID FLOW LBS/HR	BLDG. STEAM ENT HUMID FLOW [kg/HR]	CONTROL TYPE	TRAP MARK	TRAP CAPACITY LBS/HR	TRAP CAPACITY [kg/HR]	REMARKS
1A-HUM1	F100	1A-AHU4	UNIT-MOUNTED DISPERSION TUBE	9,900	[4700]	200	-	52	[11]	51	[11]	21.5	[-6]	49	[9]	BLDG STEAM	30	[210]	200	[91]			20	[9]	
1A-HUM2	F100	1A-AHU5	UNIT-MOUNTED DISPERSION TUBE	16,400	[7700]	370	-	52	[11]	51	[11]	21.5	[-6]	49	[9]	BLDG STEAM	30	[210]	370	[170]			37	[17]	

NOTE: SEE TRAP SCHEDULE FOR HUMIDIFIER TRAP SIZE.

AIR FLOW MEASURING DEVICE SCHEDULE

MARK	LOCATION	SYSTEM AND/OR SERVICE	AIR FLOW MIN CFM	AIR FLOW MIN [L/s]	AIR FLOW MAX CFM	AIR FLOW MAX [L/s]	DUCT SIZE WIDTH IN	DUCT SIZE WIDTH [mm]	DUCT SIZE HEIGHT IN	DUCT SIZE HEIGHT [mm]	APD IN	APD [mm]	REMARKS
1A-AFMS1	1A-AHU5 OSA	OSA	4,100	[1900]	16,400	[7700]	66	[1700]	27	[680]		[ ]	EQUAL TO GREENHECK AMD-33, SEE CONTROL DIAGRAM FOR GENERAL LOCATION
1A-AFMS2	1A-AHU5 RETURN	RETURN	12,300	[5800]	16,400	[7700]	50	[1300]	22	[550]		[ ]	SEE CONTROL DIAGRAM FOR GENERAL LOCATION
1A-AFMS3	1A-AHU5 SUPPLY	SUPPLY	4,900	[2300]	16,400	[7700]	50	[1300]	22	[550]		[ ]	SEE CONTROL DIAGRAM FOR GENERAL LOCATION
1A-AFMS4	1A-AHU4 OSA	OSA	2,500	[1200]	9,900	[4700]	20	[500]	32	[800]		[ ]	SEE CONTROL DIAGRAM FOR GENERAL LOCATION
1A-AFMS5	1A-AHU4 RETURN/EXH	RETURN/ EXHAUST	9,450	[4500]	9,450	[4500]	48	[1200]	22	[550]		[ ]	SEE CONTROL DIAGRAM FOR GENERAL LOCATION
1A-AFMS6	1A-AHU4 SUPPLY	SUPPLY	2,500	[1200]	9,900	[4700]	50	[1300]	24	[600]		[ ]	SEE CONTROL DIAGRAM FOR GENERAL LOCATION

BUILDING STEAM TRAP SCHEDULE

MARK	LOCATION/ SERVICE	CAPACITY AT MIN DIFF PRESS LBS/HR	CAPACITY AT MIN DIFF PRESS [kg/HR]	MIN DIFF PRESS PSI	MIN DIFF PRESS [kPa]	MIN INLET PRESS PSI	MIN INLET PRESS [kPa]	TRAP TYPE	TRAP SIZE IN	TRAP SIZE [mm]	REMARKS
1A-ST1	GROUND FLR PIPE TO MECH RM	57	[26]	3	[21]	30	[210]	INVERTED BUCKET	0.75	[19]	
1A-ST2	GROUND FLR PIPE TO MECH RM	57	[26]	3	[21]	30	[210]	INVERTED BUCKET	0.75	[19]	
1A-ST3	MECH ROOM	20	[9]	11	[76]	30	[210]	INVERTED BUCKET	0.75	[19]	
1A-ST4	MECH ROOM	37	[17]	11	[76]	30	[210]	INVERTED BUCKET	0.75	[19]	

INTAKE/EXHAUST HOOD SCHEDULE

MARK	LOCATION	SYSTEM AND/OR SERVICE	TYPE	APPLICATION	THROAT SIZE IN	THROAT SIZE [mm]	AIR FLOW CFM	AIR FLOW [L/s]	APD IN	APD [Pa]	DAMPER TYPE	REMARKS
1A-GV1	F116	RELIEF	LOUVERED PENTHOUSE		40 x 24	[1016 x 610]		[ ]		[ ]	GRAVITY	1, 2
1A-GV2	F106	RELIEF	LOUVERED PENTHOUSE		36 x 18	[915 x 457]		[ ]		[ ]	GRAVITY	1, 2

1. HOOD TO BE EQUAL TO GREENHECK WIH.
2. PROVIDE HOOD WITH INSECT SCREEN, 0.5" HOOD INSULATION, 12" ROOF CURB, AND GRAVITY DAMPER.

ENERGY RECOVERY SECTION PERFORMANCE

SUMMER O.S.A. CONDITIONS O.S.A. CFM	ENT. AIR TEMP. °F db	ENT. AIR TEMP. °F wb	LVG. AIR TEMP. °F db	LVG. AIR TEMP. °F wb	SUMMER EXHAUST CONDITIONS EXHAUST CFM	ENT. AIR TEMP. °F db	ENT. AIR TEMP. °F wb	WINTER O.S.A. CONDITIONS O.S.A. CFM	ENT. AIR TEMP. °F db	ENT. AIR TEMP. °F wb	LEV. AIR TEMP. °F db	LEV. AIR TEMP. °F wb	WINTER EXHAUST CONDITIONS EXHAUST CFM	ENT. AIR TEMP. °F db	ENT. AIR TEMP. °F wb
9,900	96	78	81.6	68.7	9,450	75	63	9,900	16	15	54.53	43.91	9,450	72	54

FULLY SPRINKLERED

Revisions: Date:

CONSULTANTS:

Allen&Hoshall
engineering since 1915
1661 International Drive Memphis, TN 38120
901 820 0820 fax 901 683 1001
www.allenhoshall.com

SEAL:

MATTHEW GLYNN SINGLETON REGISTERED ENGINEER No. 115054 STATE OF TENNESSEE

ARCHITECT/ENGINEERS:

brg3s architects
11 W. Huling Avenue
Memphis, Tennessee 38103
t 901.260.9600
f 301.531.8042
w brg3s.com

DRAWING TITLE: MECHANICAL SCHEDULES AND NOTES
SCALE: N/A
APPROVED PROJECT DIRECTOR:

PROJECT TITLE: VA BUILDING 1A ENTRANCE EXPANSION
LOCATION: VAMC, Memphis, Tennessee
DATE: January 27, 2014 CHECKED: JRN DRAWN: MGS

PROJECT NUMBER: 61660
BUILDING NUMBER: 1A
DRAWING NUMBER: MH-601
DWG. OF

AIR TERMINAL UNIT SIZING SCHEDULE

SIZE	MIN ALLOWABLE AIR FLOW		MAX ALLOWABLE AIR FLOW		DUCT INLET SIZE		MAX APD		MAXIMUM SOUND POWER LEVEL (Re: 10^{-12} WATTS) FOR BOX DISCHARGE AT MAXIMUM INLET DUCT STATIC						HOT WATER HEATING COIL										REMARKS
									OCTAVE BANDS						EAT		EWT		FLOW		MAX WPD		PIPE RUNOUT SIZE TO COIL		
	CFM	[L/s]	CFM	[L/s]	IN	[mm]	IN WG	[Pa]	2	3	4	5	6	7	°F	[°C]	°F	[°C]	GPM	[L/m]	FT	[kPa]	IN	[mm]	
A	60	[28]	170	[80]	4	[100]	0.4	[100]	69	65	58	52	51	47	55	[13]	180	[82]	0.5	[2]	3	[9]	0.75	[19]	----
B	90	[42]	260	[120]	5	[130]	0.4	[100]	69	63	59	52	51	47	55	[13]	180	[82]	0.5	[2]	3	[9]	0.75	[19]	----
C	130	[61]	380	[180]	6	[150]	0.4	[100]	69	67	61	55	52	49	55	[13]	180	[82]	0.7	[3]	4	[12]	0.75	[19]	----
D	160	[76]	490	[230]	7	[180]	0.4	[100]	70	68	63	57	53	49	55	[13]	180	[82]	0.7	[3]	4	[12]	0.75	[19]	----
E	230	[110]	680	[320]	8	[200]	0.4	[100]	71	68	59	53	51	47	55	[13]	180	[82]	1	[4]	3	[9]	0.75	[19]	----
F	270	[130]	790	[370]	9	[230]	0.4	[100]	71	69	60	54	51	47	55	[13]	180	[82]	1.5	[6]	4	[12]	0.75	[19]	----
G	350	[170]	1050	[500]	10	[250]	0.4	[100]	74	68	61	57	54	52	55	[13]	180	[82]	1.5	[6]	4	[12]	0.75	[19]	----
H	500	[240]	1500	[710]	12	[300]	0.4	[100]	73	69	64	59	57	53	55	[13]	180	[82]	2.5	[10]	3	[9]	0.75	[19]	----
I	750	[350]	2250	[1100]	14	[350]	0.4	[100]	73	68	65	61	61	59	55	[13]	180	[82]	3.5	[13]	4	[12]	0.75	[19]	----
J	1000	[470]	3000	[1400]	16	[400]	0.4	[100]	73	68	66	60	58	55	55	[13]	180	[82]	4.5	[17]	4	[12]	1	[25]	----

NOTES

1. INLET STATIC BASED ON ARI 885-98.
2. THIS SCHEDULE IS USED WITH THE TERMINAL UNIT SCHEDULE.
3. CONTROL SEQUENCE SHALL BE AS INDICATED ON THE AIR TERMINAL UNIT SCHEDULE.
4. PROVIDE SOUND ATTENUATION AFTER-SECTION AS REQUIRED TO MEET ROOM NC LEVEL.

AIR DEVICE SCHEDULE (SUPPLY)

MARK	TYPE	AIR FLOW				MAX APD		MOUNTING	PANEL/FRAME SIZE		NECK SIZE		NC	DAMPER	FINISH	REMARKS
		MIN		MAX												
		CFM	[L/s]	CFM	[L/s]	IN WG	[Pa]		IN x IN	[mm x mm]	IN	[mm]				
1	LOUVERED FACE	0	[0]	160	[76]	0.080	[20]	CEILING	12 x 12	[600 x 600]	6 ø	[152 ø]	24	NONE	WHITE	EQUAL TO PRICE SCD
2	LOUVERED FACE	100	[47]	280	[130]	0.100	[25]	CEILING	24 x 24	[600 x 600]	8 ø	[203 ø]	21	NONE	WHITE	EQUAL TO PRICE SCD
3	LOUVERED FACE	220	[100]	430	[200]	0.090	[23]	CEILING	24 x 24	[600 x 600]	10 ø	[254 ø]	24	NONE	WHITE	EQUAL TO PRICE SCD
4	LOUVERED FACE	310	[150]	620	[290]	0.080	[20]	CEILING	24 x 24	[600 x 600]	12 ø	[305 ø]	26	NONE	WHITE	EQUAL TO PRICE SCD
5	SUPPLY REGISTER	110	[52]	325	[150]	0.100	[25]	DUCT	10 x 6	[254 x 153]	10 x 6	[254 x 153]	28	INTEGRAL	WHITE	EQUAL TO PRICE 520D

NOTES

1. SEE FLOOR PLAN FOR THROW PATTERN.
2. SEE DETAIL FOR DAMPER IN BRANCH DUCT SERVING EACH DIFFUSER.
3. PROVIDE SQUARE TO ROUND ADAPTER.

AIR DEVICE SCHEDULE (RETURN & EXHAUST)

MARK	TYPE	AIR FLOW				MAX APD		MOUNTING	PANEL/FRAME SIZE		NECK SIZE		NC	DAMPER	FINISH	REMARKS
		MIN		MAX												
		CFM	[L/s]	CFM	[L/s]	IN WG	[Pa]		IN x IN	[mm x mm]	IN x IN	[mm x mm]				
8	EGG CRATE	0	[0]	160	[76]	0.088	22.000	CEILING	12 x 12	[600 x 600]	6 ø	[152 ø]	21	NONE	WHITE	EQUAL TO PRICE PFRF
9	EGG CRATE	105	[50]	245	[120]	0.088	22.000	CEILING	24 x 24	[600 x 600]	8 ø	[203 ø]	21	NONE	WHITE	EQUAL TO PRICE PFRF
10	EGG CRATE	165	[78]	330	[160]	0.088	22.000	CEILING	24 x 24	[600 x 600]	10 ø	[254 ø]	20	NONE	WHITE	EQUAL TO PRICE PFRF
11	EGG CRATE	235	[110]	470	[220]	0.088	22.000	CEILING	24 x 24	[600 x 600]	12 ø	[305 ø]	22	NONE	WHITE	EQUAL TO PRICE PFRF
12	EGG CRATE	320	[150]	535	[250]	0.087	22.000	CEILING	24 x 24	[600 x 600]	14 ø	[356 ø]	21	NONE	WHITE	EQUAL TO PRICE PFRF
13	EGG CRATE	420	[200]	700	[330]	0.087	22.000	CEILING	24 x 24	[600 x 600]	16 ø	[406 ø]	16	NONE	WHITE	EQUAL TO PRICE PFRF
14	RETURN REGISTER	120	[57]	360	[170]	0.130	33.000	DUCT	12 x 8	[305 x 204]	12 x 8	[305 x 204]	26	INTEGRAL	WHITE	EQUAL TO PRICE 530D

NOTE

PROVIDE SQUARE TO ROUND ADAPTER.

AIR DEVICE SCHEDULE (LINEAR)

MARK	TYPE	AIR FLOW				MAX APD		MIN THROW		MAX THROW		# OF SLOTS	SLOT WIDTH		PLENUM SIZE		NECK SIZE		THROW PATTERN	THROW TYPE	NC	DAMPER	FINISH	REMARKS
		MIN		MAX											IN	[mm]	IN	[mm]						
		CFM	[L/s]	CFM	[L/s]	IN WG	[Pa]	FT	[M]	FT	[M]		IN	[mm]										
6	LINEAR SUPPLY	150	[71]	600	[280]	0.22	54.78	15	4.6	34	10.4	2	1.25	[31]	48 x 4	[1220 x 102]	12 ø	[305 ø]	2-DIRECTIONAL	HORIZONTAL	30	NONE	WHITE	EQUAL TO PRICE TBDIS100, EXTERNALLY INSULATED
7	LINEAR RETURN	190	[90]	600	[280]	0.20	49.80	--	--	--	--	2	1.25	[31]	48 x 4	[1220 x 102]	12 ø	[305 ø]	--	--	30	NONE	WHITE	EQUAL TO PRICE TBR7

SINGLE DUCT AIR TERMINAL UNIT SCHEDULE

MARK	LOCATION	AREA AND/OR ROOM SERVED	SYSTEM AIR HANDLING	SIZE	AIR FLOW				ADDITIONAL SOUND ATTUNATION REQUIRED	CONTROL TYPE	CONTROL SEQUENCE	REHEAT			MIN REHEAT CAPACITY (BTU)	REMARKS
					MAX		MIN									
					CFM	[L/s]	CFM	[L/s]				HW	ELEC	NONE		
1A-TU-4-1	FB1129	INTAKE/ REG	1A-AHU4	C	325	[150]	100	[47]	NONE	VAV	SLIDEBAR 4 DEGREE DEADBAND	YES			4,100	1, 2, 3, 4
1A-TU-4-2	CB1-26	LOCKER/ WORK	1A-AHU4	E	650	[310]	195	[92]	NONE	VAV	SLIDEBAR 4 DEGREE DEADBAND	YES			8,000	1, 2, 3, 4
1A-TU-4-3	FB1132	INTAKE/ REG	1A-AHU4	C	325	[150]	100	[47]	NONE	VAV	SLIDEBAR 4 DEGREE DEADBAND	YES			4,100	1, 2, 3, 4
1A-TU-4-4	CB1-26	VEST/ TLT	1A-AHU4	A	100	[47]	30	[14]	NONE	VAV	SLIDEBAR 4 DEGREE DEADBAND	YES			1,200	1, 2, 3, 4
1A-TU-4-5	FB1127	INTAKE/ REG	1A-AHU4	D	425	[200]	130	[61]	NONE	VAV	SLIDEBAR 4 DEGREE DEADBAND	YES			5,300	1, 2, 3, 4
1A-TU-4-6	FB1126	INTAKE/ REG WTG	1A-AHU4	I	1800	[850]	540	[250]	NONE	VAV	SLIDEBAR 4 DEGREE DEADBAND	YES			22,200	1, 2, 3, 4
1A-TU-4-7	CB1-1	LOBBY	1A-AHU4	I	2150	[1000]	645	[300]	NONE	VAV	SLIDEBAR 4 DEGREE DEADBAND	YES			26,500	1, 2, 3, 4
1A-TU-4-8	FB1126	ELIGIBILITY	1A-AHU4	D	400	[190]	120	[57]	NONE	VAV	SLIDEBAR 4 DEGREE DEADBAND	YES			4,900	1, 2, 3, 4
1A-TU-4-9	CB1-1E	EXIST LOBBY	1A-AHU4	G	950	[450]	285	[130]	NONE	VAV	SLIDEBAR 4 DEGREE DEADBAND	YES			11,700	1, 2, 3, 4
1A-TU-4-10	CB1-1	LOBBY	1A-AHU4	I	1850	[870]	555	[260]	NONE	VAV	SLIDEBAR 4 DEGREE DEADBAND	YES			22,800	1, 2, 3, 4
1A-TU-2E-1	EB1114	CASHIER CUEING	EXISTING 1A-AHU2	D	400	[190]	120	[57]	NONE	VAV	SLIDEBAR 4 DEGREE DEADBAND	YES			4,900	1, 2, 3, 4
1A-TU-2E-2	EB1117	CASHIER WORK	EXISTING 1A-AHU2	C	325	[150]	100	[47]	NONE	VAV	SLIDEBAR 4 DEGREE DEADBAND	YES			4,100	1, 2, 3, 4
1A-TU-2E-3	EB1118	CLERKS	EXISTING 1A-AHU2	A	150	[71]	45	[21]	NONE	VAV	SLIDEBAR 4 DEGREE DEADBAND	YES			1,800	1, 2, 3, 4
1A-TU-2E-4	EB1116	TRAVEL CUEING	EXISTING 1A-AHU2	F	700	[330]	210	[99]	NONE	VAV	SLIDEBAR 4 DEGREE DEADBAND	YES			8,600	1, 2, 3, 4
1A-TU-5-1	STAIR 19-1F	STAIR 19-1F	1A-AHU5	E	675	[320]	205	[97]	NONE	VAV	SLIDEBAR 4 DEGREE DEADBAND	YES			8,400	1, 2, 3, 4
1A-TU-5-2	F103	BREAK	1A-AHU5	B	200	[94]	60	[28]	NONE	VAV	SLIDEBAR 4 DEGREE DEADBAND	YES			2,500	1, 2, 3, 4
1A-TU-5-3	F102	CONF	1A-AHU5	C	375	[180]	115	[54]	NONE	VAV	SLIDEBAR 4 DEGREE DEADBAND	YES			4,700	1, 2, 3, 4
1A-TU-5-4	F102	WAITING	1A-AHU5	G	950	[450]	475	[220]	NONE	VAV	SLIDEBAR 4 DEGREE DEADBAND	YES			19,500	1, 2, 3, 4
1A-TU-5-5	C1-33	WORK/ CORR	1A-AHU5	G	990	[470]	300	[140]	NONE	VAV	SLIDEBAR 4 DEGREE DEADBAND	YES			12,300	1, 2, 3, 4
1A-TU-5-6	F104	CLINICAL/ CORR	1A-AHU5	E	575	[270]	175	[83]	NONE	VAV	SLIDEBAR 4 DEGREE DEADBAND	YES			7,200	1, 2, 3, 4
1A-TU-5-7	F108	STUDENT/ CLINICAL	1A-AHU5	B	225	[110]	70	[33]	NONE	VAV	SLIDEBAR 4 DEGREE DEADBAND	YES			2,900	1, 2, 3, 4
1A-TU-5-8	F109	STUDENT/ CLINICAL	1A-AHU5	B	225	[110]	70	[33]	NONE	VAV	SLIDEBAR 4 DEGREE DEADBAND	YES			2,900	1, 2, 3, 4
1A-TU-5-9	C1-34	CLINICAL/ CORR	1A-AHU5	E	550	[260]	165	[78]	NONE	VAV	SLIDEBAR 4 DEGREE DEADBAND	YES			6,800	1, 2, 3, 4
1A-TU-5-10	F120	CHIEF	1A-AHU5	E	125	[59]	65	[31]	NONE	VAV	SLIDEBAR 4 DEGREE DEADBAND	YES			1,600	1, 2, 3, 4
1A-TU-5-11	F118	ASSIST/ SUPER	1A-AHU5	B	250	[120]	75	[35]	NONE	VAV	SLIDEBAR 4 DEGREE DEADBAND	YES			3,100	1, 2, 3, 4
1A-TU-5-12	C1-34	SUPER	1A-AHU5	B	250	[120]	75	[35]	NONE	VAV	SLIDEBAR 4 DEGREE DEADBAND	YES			3,100	1, 2, 3, 4
1A-TU-5-13	F100	MECH/ COMP	1A-AHU5	H	1300	[610]	1300	[610]	NONE	CV	SLIDEBAR 4 DEGREE DEADBAND	YES			16,000	1, 2, 3, 4
1A-TU-5-14	F100A	1ST FLR IT ROOM	1A-AHU5	E	600	[280]	180	[85]	NONE	VAV	SLIDEBAR 4 DEGREE DEADBAND	YES			7,400	1, 2, 3, 4
1A-TU-5-15	CB1-20	BREAK/ CONF	1A-AHU5	G	800	[380]	240	[110]	NONE	VAV	SLIDEBAR 4 DEGREE DEADBAND	YES			9,800	1, 2, 3, 4
1A-TU-5-16	CB1-20	GF IT ROOM	1A-AHU5	F	775	[370]	235	[110]	NONE	VAV	SLIDEBAR 4 DEGREE DEADBAND	YES			9,600	1, 2, 3, 4
1A-TU-5-17	FB1115	STORAGE/ CORR	1A-AHU5	E	600	[280]	180	[85]	NONE	VAV	SLIDEBAR 4 DEGREE DEADBAND	YES			7,400	1, 2, 3, 4
1A-TU-5-18	FB1105	LOUNGE/ LOCKERS	1A-AHU5	F	775	[370]	235	[110]	NONE	VAV	SLIDEBAR 4 DEGREE DEADBAND	YES			9,600	1, 2, 3, 4
1A-TU-5-19	G79	SEC	1A-AHU5	C	300	[140]	90	[42]	NONE	VAV	SLIDEBAR 4 DEGREE DEADBAND	YES			3,700	1, 2, 3, 4
1A-TU-5-20	FB1115A	CALL/ ESCORT	1A-AHU5	E	650	[310]	195	[92]	NONE	VAV	SLIDEBAR 4 DEGREE DEADBAND	YES			8,000	1, 2, 3, 4
1A-TU-5-21	FB1106	VOL CHIEF	1A-AHU5	E	550	[260]	165	[78]	NONE	VAV	SLIDEBAR 4 DEGREE DEADBAND	YES			6,800	1, 2, 3, 4
1A-TU-5-22	FB1106B	VOL OFFICE	1A-AHU5	C	325	[150]	100	[47]	NONE	VAV	SLIDEBAR 4 DEGREE DEADBAND	YES			4,100	1, 2, 3, 4
1A-TU-5-23	FB1108	NURSE MGR	1A-AHU5	B	175	[83]	55	[26]	NONE	VAV	SLIDEBAR 4 DEGREE DEADBAND	YES			2,300	1, 2, 3, 4
1A-TU-5-24	FB1109	DISPATCH/ SUPER	1A-AHU5	C	350	[170]	105	[50]	NONE	VAV	SLIDEBAR 4 DEGREE DEADBAND	YES			4,300	1, 2, 3, 4
1A-TU-5-25	FB1111	SUPER	1A-AHU5	A	150	[71]	45	[21]	NONE	VAV	SLIDEBAR 4 DEGREE DEADBAND	YES			1,800	1, 2, 3, 4
1A-TU-5-26	FB1112	TRAVEL CHIEF	1A-AHU5	D	425	[200]	130	[61]	NONE	VAV	SLIDEBAR 4 DEGREE DEADBAND	YES			5,300	1, 2, 3, 4
1A-TU-5-27	FB1118	TN VA OFFICES	1A-AHU5	E	525	[250]	160	[76]	NONE	VAV	SLIDEBAR 4 DEGREE DEADBAND	YES			6,600	1, 2, 3, 4
1A-TU-5-28	FB1117	VSO WAITING	1A-AHU5	A	150	[71]	75	[35]	NONE	VAV	SLIDEBAR 4 DEGREE DEADBAND	YES			3,100	1, 2, 3, 4
1A-TU-5-29	FB1125	MS VA OFFICES	1A-AHU5	D	425	[200]	130	[61]	NONE	VAV	SLIDEBAR 4 DEGREE DEADBAND	YES			5,300	1, 2, 3, 4
1A-TU-5-30	STAIR 19-GF	STAIR 19-GF	1A-AHU5	F	725	[340]	220	[100]	NONE	VAV	SLIDEBAR 4 DEGREE DEADBAND	YES			9,000	1, 2, 3, 4
1A-TU-5-31	F120	ELEV/ ELEC	1A-AHU5	D	400	[190]	120	[57]	NONE	VAV	SLIDEBAR 4 DEGREE DEADBAND	YES			4,900	1, 2, 3, 4

1. TERMINAL UNIT CONTROLS SHALL BE MOUNTED ON THE TERMINAL UNIT BY THE TERMINAL UNIT MANUFACTURER. IT IS THE RESPONSIBILITY OF THE CONTROLS CONTRACTOR TO FURNISH THE CONTROLLER, ACTUATOR, DIFFERENTIAL PRESSURE SENSOR, ROOM SENSOR, FIELD WIRING, ETC. FOR EACH TERMINAL UNIT AND MOUNT THEM IN AN ENCLOSURE PROVIDED BY THE TERMINAL UNIT MANUFACTURER. THE TERMINAL UNIT MANUFACTURER SHALL ALSO PROVIDE A 120/24 VOLT TRANSFORMER IN THAT ENCLOSURE FOR POWERING THE TERMINAL UNIT CONTROLLER AND ITS FIELD GEAR. THE TERMINAL UNIT MANUFACTURER SHALL PROVIDE AN ON/OFF TOGGLE SWITCH FOR THE 120V CIRCUIT FOR EASE OF MAINTENANCE. ANY COSTS FOR MOUNTING AND WIRING THE CONTROLS ON THE TERMINAL UNIT ARE INCLUDED IN THE TERMINAL UNIT MANUFACTURER'S BID.
2. PROVIDE 2–WAY CONTROL VALVE W/ DDC CONTROL.
3. VAV SHALL DOUBLE–WALLED CONSTRUCTION FOR EASE OF MAINTENANCE.
4. VAV SHALL BE JCI MODEL TSS SERIES OR APPROVED EQUAL.

FULLY SPRINKLERED

Revisions: Date:

CONSULTANTS:

Allen&Hoshall
engineering since 1915
1661 International Drive Memphis, TN 38120
901 820 0820 fax 901 683 1001
www.allenhoshall.com

SEAL:

MATTHEW GLYNN SINGLETON
REGISTERED ENGINEER
No. 115025
STATE OF TENNESSEE

ARCHITECT/ENGINEERS:

brg3s architects
11 W. Huling Avenue
Memphis, Tennessee 38103
t 901.260.9600
f 301.531.8042
w brg3s.com

DRAWING TITLE: MECHANICAL SCHEDULES AND NOTES
SCALE: N/A
APPROVED PROJECT DIRECTOR:

PROJECT TITLE: VA BUILDING 1A ENTRANCE EXPANSION
LOCATION: VAMC, Memphis, Tennessee
DATE: January 27, 2014 | CHECKED: JRN | DRAWN: MGS

PROJECT NUMBER: 61660
BUILDING NUMBER: 1A
DRAWING NUMBER: MH-602
DWG. OF

ROOM AIR BALANCE SCHEDULE

ROOM NO	ROOM NAME	AIR HANDLING UNIT NO	TERMINAL UNIT	INDIVIDUAL ROOM TEMP CONTROL	SUPPLY: ROOM AIR FLOW CFM	SUPPLY: ROOM AIR FLOW L/S	SUPPLY: # OF AIR DEVICES	SUPPLY: AIR DEVICE MARK	SUPPLY: SUPPLY FAN	RETURN OR EXHAUST: RETURN OR EXHAUST (R/E)	RETURN OR EXHAUST: ROOM AIR FLOW CFM	RETURN OR EXHAUST: ROOM AIR FLOW L/S	RETURN OR EXHAUST: # OF AIR DEVICES	RETURN OR EXHAUST: AIR DEVICE MARK	RETURN OR EXHAUST: RETURN OR EXHAUST FAN	ROOM AIR FLOW: CV	ROOM AIR FLOW: VAV	ROOM AIR BALANCE	NET INFILTRATION: CFM	NET INFILTRATION: [L/s]	NET EXFILTRATION: CFM	NET EXFILTRATION: [L/s]	REMARKS
19-GF	ELEV/STAIR LOBBY	1A-AHU5	1A-TU-5-30	YES	475	[220]	2	2	1A-SF2	R	400	[190]	1	11	1A-RF4		X	+	0	[ ]	75	[35]	----
G-67	MY HEALTHY VET	EXISTING 1A-AHU2E	1A-TU-2E-4	NO	125	[59]	1	2	--	N/A	0	[ ]	0	0	N/A		X	+	0	[ ]	125	[59]	----
G74	VEND/ TELEPHONE	EXISTING 1A-AHU2E	1A-TU-2E-4	NO	125	[59]	1	2	--	R	200	[94]	1	9	1A-RF4		X	-	75	[35]	0	[ ]	----
G79	CORRIDOR	1A-AHU5	1A-TU-5-18	NO	100	[47]	1	2	1A-SF2	N/A	0	[ ]	0	0	N/A		X	+	0	[ ]	100	[47]	----
CB1-1	LOBBY	1A-AHU4	1A-TU-4-7/ 1A-TU-4-10	YES	3650	[1700]	6	6	1A-SF1	E	3400	[1600]	6	7	1A-RF3		X	+	0	[ ]	250	[120]	----
CB1-1A	EXISTING ELEV LOBBY	1A-AHU4	1A-TU-4-9	YES	350	[170]	1	3	1A-SF1	E	325	[150]	1	10	1A-RF3		X	+	0	[ ]	25	[12]	----
CB1-1E	LOBBY OP PHARMACY	1A-AHU4	1A-TU-4-9	NO	600	[280]	2	3	1A-SF1	E	550	[260]	1	12	1A-RF3		X	+	0	[ ]	50	[24]	----
CB1-20	STAFF CORRIDOR	1A-AHU5	1A-TU-5-16/ 1A-TU-5-17	NO	350	[170]	2	2	1A-SF2	R	300	[140]	1	10	1A-RF4		X	+	0	[ ]	50	[24]	----
CB1-21	STAFF CORRIDOR	1A-AHU5	1A-TU-5-20	NO	300	[140]	1	3	1A-SF2	R	250	[120]	1	10	1A-RF4		X	+	0	[ ]	50	[24]	----
CB1-22	STAFF CORRIDOR	1A-AHU5	1A-TU-5-29	NO	200	[94]	1	2	1A-SF2	R	150	[71]	1	9	1A-RF4		X	+	0	[ ]	50	[24]	----
CB1-23	CORRIDOR	1A-AHU5	1A-TU-5-27	NO	150	[71]	1	2	1A-SF2	R	125	[59]	1	9	1A-RF4		X	+	0	[ ]	25	[12]	----
CB1-24	STAFF CORRIDOR	1A-AHU4	1A-TU-4-5	NO	225	[110]	1	2	1A-SF1	E	200	[94]	1	9	1A-RF3		X	+	0	[ ]	25	[12]	----
CB1-25	EXIST STAFF CORRIDOR	1A-AHU5	1A-TU-5-26	NO	150	[71]	1	2	1A-SF2	R	125	[59]	1	9	1A-RF4		X	+	0	[ ]	25	[12]	----
CB1-26	STAFF CORRIDOR	1A-AHU4	1A-TU-4-2	NO	225	[110]	1	2	1A-SF1	E	150	[71]	1	9	1A-RF3		X	+	0	[ ]	75	[35]	----
CB1-27	STAFF CORRIDOR	1A-AHU4	1A-TU-4-8	NO	200	[94]	1	2	1A-SF1	E	125	[59]	1	9	1A-RF3		X	+	0	[ ]	75	[35]	----
EB1114	CASHIER CUEING	EXISTING 1A-AHU2E	1A-TU-2E-1	YES	300	[140]	1	3	--	R	275	[130]	1	10	1A-RF4		X	+	0	[ ]	25	[12]	----
EB1115	TRAVEL COORD	EXISTING 1A-AHU2E	1A-TU-2E-1	NO	100	[47]	1	2	--	R	75	[35]	1	8	1A-RF4		X	+	0	[ ]	25	[12]	----
EB1116	TRAVEL CUEING	EXISTING 1A-AHU2E	1A-TU-2E-4	YES	450	[210]	2	2	--	R	400	[190]	1	11	1A-RF4		X	+	0	[ ]	50	[24]	----
EB1117	CASHIER WORK	EXISTING 1A-AHU2E	1A-TU-2E-2	YES	150	[71]	1	2	--	R	275	[130]	1	10	1A-RF4		X	-	125	[59]	0	[ ]	----
EB1117A	AGENT CASHIERS	EXISTING 1A-AHU2E	1A-TU-2E-2	NO	175	[83]	2	1	--	N/A	0	[ ]	0	0	N/A		X	+	0	[ ]	175	[83]	----
EB1118	TRAVEL SCHEDULER	EXISTING 1A-AHU2E	1A-TU-2E-3	NO	75	[35]	1	1	--	N/A	0	[ ]	0	0	N/A		X	+	0	[ ]	75	[35]	----
EB1118A	TRAVEL CLERK	EXISTING 1A-AHU2E	1A-TU-2E-3	YES	75	[35]	1	1	--	R	100	[47]	1	8	1A-RF4		X	-	25	[12]	0	[ ]	----
FB1102	RECEPTION DESK	1A-AHU4	1A-TU-4-7	NO	225	[110]	1	2	1A-SF1	N/A	0	[ ]	0	0	N/A		X	+	0	[ ]	175	[83]	----
FB1103	DAV TRANSPORT	1A-AHU4	1A-TU-4-7	NO	125	[59]	1	1	1A-SF1	N/A	0	[ ]	0	0	N/A		X	+	0	[ ]	100	[47]	----
FB1104	BREAK ROOM/ CONF	1A-AHU5	1A-TU-5-15	YES	600	[280]	2	3	1A-SF2	R	525	[250]	1	12	1A-RF4		X	+	0	[ ]	75	[35]	----
FB1104A	VESTIBULE	1A-AHU5	1A-TU-5-15	NO	100	[47]	1	1	1A-SF2	N/A	0	[ ]	0	0	N/A		X	+	0	[ ]	100	[47]	----
FB1104B	STAFF TOILET	1A-AHU5	1A-TU-5-15	NO	50	[24]	1	1	1A-SF2	E	100	[47]	1	8	1A-RF3		X	-	50	[24]	0	[ ]	----
FB1104C	STAFF TOILET	1A-AHU5	1A-TU-5-15	NO	50	[24]	1	1	1A-SF2	E	100	[47]	1	8	1A-RF3		X	-	50	[24]	0	[ ]	----
FB1105	COFFEE CART STOR	1A-AHU5	1A-TU-5-17	YES	150	[71]	1	2	1A-SF2	R	125	[59]	1	9	1A-RF4		X	+	0	[ ]	25	[12]	----
FB1106	VOLUNTEER SECRETARY	1A-AHU5	1A-TU-5-19	YES	175	[83]	1	2	1A-SF2	R	250	[120]	1	10	1A-RF4		X	-	75	[35]	0	[ ]	----
FB1106A	VOLUNTEER CHIEF	1A-AHU5	1A-TU-5-21	YES	550	[260]	2	3	1A-SF2	R	475	[220]	1	11	1A-RF4		X	+	0	[ ]	75	[35]	----
FB1106B	VOLUNTEER OFFICE	1A-AHU5	1A-TU-5-22	YES	325	[150]	1	3	1A-SF2	R	275	[130]	1	10	1A-RF4		X	+	0	[ ]	50	[24]	----
FB1107	VOLUNTEER LOUNGE	1A-AHU5	1A-TU-5-18	YES	550	[260]	2	3	1A-SF2	R	575	[270]	1	12	1A-RF4		X	-	25	[12]	0	[ ]	----
FB1107A	REPORT ROOM	1A-AHU5	1A-TU-5-18	NO	75	[35]	1	1	1A-SF2	N/A	0	[ ]	0	0	N/A		X	+	0	[ ]	75	[35]	----
FB1107B	LOCKERS	1A-AHU5	1A-TU-5-18	NO	50	[24]	1	1	1A-SF2	E	100	[47]	1	8	1A-RF3		X	-	50	[24]	0	[ ]	----
FB1108	ESCORT NURSE MGR	1A-AHU5	1A-TU-5-23	YES	175	[83]	1	2	1A-SF2	R	150	[71]	1	9	1A-RF4		X	+	0	[ ]	25	[12]	----
FB1109	ESCORT DISPATCH	1A-AHU5	1A-TU-5-24	NO	175	[83]	1	2	1A-SF2	R	150	[71]	1	8	1A-RF4		X	+	0	[ ]	25	[12]	----
FB1110	SUPV- INTAKE	1A-AHU5	1A-TU-5-24	YES	175	[83]	1	2	1A-SF2	R	150	[71]	1	8	1A-RF4		X	+	0	[ ]	25	[12]	----
FB1111	SUPV- TOWER	1A-AHU5	1A-TU-5-25	YES	150	[71]	1	2	1A-SF2	R	125	[59]	1	9	1A-RF4		X	+	0	[ ]	25	[12]	----
FB1112	TRAVEL CHIEF	1A-AHU5	1A-TU-5-26	YES	275	[130]	1	3	1A-SF2	R	250	[120]	1	10	1A-RF4		X	+	0	[ ]	25	[12]	----
FB1113	HOUSE KEEPING	1A-AHU5	1A-TU-5-30	NO	50	[24]	1	1	1A-SF2	E	75	[35]	1	8	1A-RF3		X	-	25	[12]	0	[ ]	----
FB1114	ESCORT MULTIPURP	1A-AHU5	1A-TU-5-20	YES	200	[94]	1	2	1A-SF2	R	175	[83]	1	9	1A-RF4		X	+	0	[ ]	25	[12]	----
FB1114A	ESCORT/ CART STOR	1A-AHU5	1A-TU-5-20	NO	75	[35]	1	1	1A-SF2	R	50	[24]	1	8	1A-RF4		X	+	0	[ ]	25	[12]	----
FB1115	VOLUNTEER STORAGE	1A-AHU5	1A-TU-5-17	NO	275	[130]	1	3	1A-SF2	R	250	[120]	1	10	1A-RF4		X	+	0	[ ]	25	[12]	----
FB1115A	VOLUNTEER CALL	1A-AHU5	1A-TU-5-20	NO	75	[35]	1	1	1A-SF2	R	50	[24]	1	8	1A-RF4		X	+	0	[ ]	25	[12]	----
FB1116	IT ROOM	1A-AHU5	1A-TU-5-16	YES	600	[280]	2	5	1A-SF2	R	500	[240]	2	14	1A-RF4		X	+	0	[ ]	100	[47]	----
FB1117	VSO WAITING	1A-AHU5	1A-TU-5-28	YES	150	[71]	1	2	1A-SF2	E	125	[59]	1	9	1A-RF3		X	+	0	[ ]	25	[12]	----
FB1118	TN DEPT OF VA	1A-AHU5	1A-TU-5-27	NO	125	[59]	1	2	1A-SF2	R	100	[47]	1	9	1A-RF4		X	+	0	[ ]	25	[12]	----
FB1119	TN DEPT OF VA	1A-AHU5	1A-TU-5-27	NO	125	[59]	1	2	1A-SF2	R	100	[47]	1	9	1A-RF4		X	+	0	[ ]	25	[12]	----
FB1120	TN DEPT OF VA	1A-AHU5	1A-TU-5-27	YES	125	[59]	1	2	1A-SF2	R	100	[47]	1	9	1A-RF4		X	+	0	[ ]	25	[12]	----
FB1122	VSO OFFICE	1A-AHU5	1A-TU-5-29	YES	125	[59]	1	2	1A-SF2	R	100	[47]	1	9	1A-RF4		X	+	0	[ ]	25	[12]	----
FB1123	MS DEPT OF VA	1A-AHU5	1A-TU-5-29	NO	125	[59]	1	2	1A-SF2	R	100	[47]	1	9	1A-RF4		X	+	0	[ ]	25	[12]	----
FB1124	VSO TOILET	1A-AHU5	1A-TU-5-29	NO	50	[24]	1	1	1A-SF2	E	100	[47]	1	8	1A-RF3		X	-	50	[24]	0	[ ]	----

ROOM AIR BALANCE SCHEDULE

ROOM NO	ROOM NAME	AIR HANDLING UNIT NO	TERMINAL UNIT	INDIVIDUAL ROOM TEMP CONTROL	SUPPLY: ROOM AIR FLOW CFM	SUPPLY: ROOM AIR FLOW L/S	SUPPLY: # OF AIR DEVICES	SUPPLY: AIR DEVICE MARK	SUPPLY: SUPPLY FAN	RETURN OR EXHAUST: RETURN OR EXHAUST (R/E)	RETURN OR EXHAUST: ROOM AIR FLOW CFM	RETURN OR EXHAUST: ROOM AIR FLOW L/S	RETURN OR EXHAUST: # OF AIR DEVICES	RETURN OR EXHAUST: AIR DEVICE MARK	RETURN OR EXHAUST: RETURN OR EXHAUST FAN	ROOM AIR FLOW: CV	ROOM AIR FLOW: VAV	ROOM AIR BALANCE	NET INFILTRATION: CFM	NET INFILTRATION: [L/s]	NET EXFILTRATION: CFM	NET EXFILTRATION: [L/s]	REMARKS
FB1125	DAV	1A-AHU5	1A-TU-5-29	NO	125	[59]	1	2	1A-SF2	R	100	[47]	1	9	1A-RF4		X	+	0	[ ]	25	[12]	----
FB1126	INTAKE/ REG WAITING	1A-AHU4	1A-TU-4-6	YES	1800	[850]	6	3	1A-SF1	E	2000	[940]	4	11	1A-RF3		X	-	200	[94]	0	[ ]	----
FB1127	INTAKE/ REG	1A-AHU4	1A-TU-4-5	YES	125	[59]	1	2	1A-SF1	E	100	[47]	1	9	1A-RF3		X	+	0	[ ]	25	[12]	----
FB1128	INTAKE/ REG	1A-AHU4	1A-TU-4-5	NO	75	[35]	1	1	1A-SF1	N/A	0	[ ]	0	0	N/A		X	+	0	[ ]	75	[35]	----
FB1129	INTAKE/ REG	1A-AHU4	1A-TU-4-1	NO	100	[47]	1	2	1A-SF1	E	75	[35]	1	8	1A-RF3		X	+	0	[ ]	25	[12]	----
FB1130	INTAKE/ REG	1A-AHU4	1A-TU-4-1	NO	75	[35]	1	1	1A-SF1	E	50	[24]	1	8	1A-RF3		X	+	0	[ ]	25	[12]	----
FB1131	INTAKE/ REG	1A-AHU4	1A-TU-4-1	NO	75	[35]	1	1	1A-SF1	E	50	[24]	1	8	1A-RF3		X	+	0	[ ]	25	[12]	----
FB1132	INTAKE/ REG	1A-AHU4	1A-TU-4-1	YES	75	[35]	1	1	1A-SF1	E	50	[24]	1	8	1A-RF3		X	+	0	[ ]	25	[12]	----
FB1133	INTAKE/ REG	1A-AHU4	1A-TU-4-3	NO	75	[35]	1	1	1A-SF1	E	50	[24]	1	8	1A-RF3		X	+	0	[ ]	25	[12]	----
FB1134	INTAKE/ REG	1A-AHU4	1A-TU-4-3	NO	75	[35]	1	1	1A-SF1	E	50	[24]	1	8	1A-RF3		X	+	0	[ ]	25	[12]	----
FB1135	INTAKE/ REG	1A-AHU4	1A-TU-4-3	NO	75	[35]	1	1	1A-SF1	E	50	[24]	1	8	1A-RF3		X	+	0	[ ]	25	[12]	----
FB1136	INTAKE/ REG	1A-AHU4	1A-TU-4-3	YES	100	[47]	1	2	1A-SF1	E	75	[35]	1	8	1A-RF3		X	+	0	[ ]	25	[12]	----
FB1137	ELIGIBILITY	1A-AHU4	1A-TU-4-8	YES	100	[47]	1	2	1A-SF1	N/A	0	[ ]	0	0	N/A		X	+	0	[ ]	100	[47]	----
FB1138	ELIGIBILITY	1A-AHU4	1A-TU-4-8	NO	100	[47]	1	2	1A-SF1	N/A	0	[ ]	0	0	N/A		X	+	0	[ ]	100	[47]	----
FB1139	VESTIBULE	1A-AHU4	1A-TU-4-4	YES	50	[24]	1	1	1A-SF1	N/A	0	[ ]	0	0	N/A		X	+	0	[ ]	50	[24]	----
FB1139A	STAFF TOILET	1A-AHU4	1A-TU-4-4	NO	50	[24]	1	1	1A-SF1	E	100	[47]	1	8	1A-RF3		X	-	50	[24]	0	[ ]	----
FB1140	STAFF TOILET	1A-AHU4	1A-TU-4-2	NO	50	[24]	1	1	1A-SF1	E	100	[47]	1	8	1A-RF3		X	-	50	[24]	0	[ ]	----
FB1141	WORK ROOM	1A-AHU4	1A-TU-4-2	YES	175	[83]	1	2	1A-SF1	E	150	[71]	1	9	1A-RF3		X	+	0	[ ]	25	[12]	----
FB1142	LOCKER ROOM	1A-AHU4	1A-TU-4-2	NO	200	[94]	1	2	1A-SF1	E	250	[120]	1	10	1A-RF3		X	-	50	[24]	0	[ ]	----
C1-33	STAFF CORRIDOR	1A-AHU5	1A-TU-5-5	NO	250	[120]	2	2	1A-SF2	R	200	[94]	1	9	1A-RF4		X	+	0	[ ]	50	[24]	----
C1-34	STAFF CORRIDOR	1A-AHU5	1A-TU-5-9	NO	250	[120]	2	2	1A-SF2	R	200	[94]	1	9	1A-RF4		X	+	0	[ ]	50	[24]	----
C1-35	STAFF CORRIDOR	1A-AHU5	1A-TU-5-6	NO	300	[140]	2	2	1A-SF2	R	250	[120]	1	10	1A-RF4		X	+	0	[ ]	50	[24]	----
C1-36	STAFF CORRIDOR	1A-AHU5	1A-TU-5-6	NO	150	[71]	1	2	1A-SF2	R	125	[59]	1	8	1A-RF4		X	+	0	[ ]	25	[12]	----
F100	MECHANICAL ROOM	1A-AHU5	1A-TU-5-13	YES	1300	[610]	4	5	1A-SF2	R	1300	[610]	4	14	1A-RF4		X	N	0	[ ]	0	[ ]	----
F100A	COMPUTER ROOM	1A-AHU5	1A-TU-5-14	YES	600	[280]	2	5	1A-SF2	R	500	[240]	2	14	1A-RF4		X	+	0	[ ]	100	[47]	----
F100B	ELECTRICAL	1A-AHU5	1A-TU-5-10	NO	200	[94]	1	2	1A-SF2	R	200	[94]	1	9	1A-RF4		X	N	0	[ ]	0	[ ]	----
F100C	ELEV MACHINE RM	1A-AHU5	1A-TU-5-10	NO	200	[94]	1	2	1A-SF2	R	200	[94]	1	9	1A-RF4		X	N	0	[ ]	0	[ ]	----
F101	WAITING	1A-AHU5	1A-TU-5-4	YES	650	[310]	2	3	1A-SF2	E	800	[380]	2	11	1A-RF3		X	-	150	[71]	0	[ ]	----
F102A	CONF ROOM	1A-AHU5	1A-TU-5-3	NO	200	[94]	1	2	1A-SF2	R	150	[71]	1	9	1A-RF4		X	+	0	[ ]	50	[24]	----
F102B	CONF ROOM	1A-AHU5	1A-TU-5-3	YES	175	[83]	1	2	1A-SF2	R	125	[59]	1	9	1A-RF4		X	+	0	[ ]	50	[24]	----
F103	BREAK ROOM	1A-AHU5	1A-TU-5-2	YES	200	[94]	1	2	1A-SF2	R	225	[110]	1	9	1A-RF4		X	-	25	[12]	0	[ ]	----
F104	CLINICAL	1A-AHU5	1A-TU-5-6	YES	125	[59]	1	2	1A-SF2	R	100	[47]	1	9	1A-RF4		X	+	0	[ ]	25	[12]	----
F105	PROGRAM SUPPORT	1A-AHU5	1A-TU-5-4	NO	300	[140]	3	1	1A-SF2	R	175	[83]	1	9	1A-RF4		X	+	0	[ ]	125	[59]	----
F106	COMMON WORK ROOM	1A-AHU5	1A-TU-5-5	YES	300	[140]	2	2	1A-SF2	R	250	[120]	1	10	1A-RF4		X	+	0	[ ]	50	[24]	----
F107	STAFF TOILET	1A-AHU5	1A-TU-5-5	NO	50	[24]	1	1	1A-SF2	E	100	[47]	1	8	1A-RF3		X	-	50	[24]	0	[ ]	----
F108	STUDENT	1A-AHU5	1A-TU-5-7	NO	100	[47]	1	2	1A-SF2	R	75	[35]	1	8	1A-RF4		X	+	0	[ ]	25	[12]	----
F109	STUDENT	1A-AHU5	1A-TU-5-8	NO	100	[47]	1	2	1A-SF2	R	75	[35]	1	8	1A-RF4		X	+	0	[ ]	25	[12]	----
F110	CLINICAL	1A-AHU5	1A-TU-5-8	YES	125	[59]	1	2	1A-SF2	R	100	[47]	1	9	1A-RF4		X	+	0	[ ]	25	[12]	----
F111	CLINICAL	1A-AHU5	1A-TU-5-7	YES	125	[59]	1	2	1A-SF2	R	100	[47]	1	9	1A-RF4		X	+	0	[ ]	25	[12]	----
F112	STAFF TOILET	1A-AHU5	1A-TU-5-9	NO	50	[24]	1	1	1A-SF2	E	100	[47]	1	8	1A-RF3		X	-	50	[24]	0	[ ]	----
F113	CLINICAL	1A-AHU5	1A-TU-5-9	NO	125	[59]	1	2	1A-SF2	R	100	[47]	1	9	1A-RF4		X	+	0	[ ]	25	[12]	----
F114	CLINICAL	1A-AHU5	1A-TU-5-9	YES	125	[59]	1	2	1A-SF2	R	100	[47]	1	9	1A-RF4		X	+	0	[ ]	25	[12]	----
F115	HOUSE KEEPING	1A-AHU5	1A-TU-5-5	NO	50	[24]	1	1	1A-SF2	E	75	[35]	1	8	1A-RF3		X	-	50	[24]	0	[ ]	----
F116	SUPER	1A-AHU5	1A-TU-5-12	YES	125	[59]	1	2	1A-SF2	R	100	[47]	1	9	1A-RF4		X	+	0	[ ]	25	[12]	----
F117	SUPER	1A-AHU5	1A-TU-5-12	NO	125	[59]	1	2	1A-SF2	R	100	[47]	1	9	1A-RF4		X	+	0	[ ]	25	[12]	----
F118	SUPER	1A-AHU5	1A-TU-5-11	NO	125	[59]	1	2	1A-SF2	R	100	[47]	1	9	1A-RF4		X	+	0	[ ]	25	[12]	----
F119	ASSIST CHIEF	1A-AHU5	1A-TU-5-11	YES	125	[59]	1	2	1A-SF2	R	100	[47]	1	9	1A-RF4		X	+	0	[ ]	25	[12]	----
F120	CHIEF	1A-AHU5	1A-TU-5-10	YES	125	[59]	1	2	1A-SF2	R	100	[47]	1	9	1A-RF4		X	+	0	[ ]	25	[12]	----
19-1F	ELEV/STAIR LOBBY	1A-AHU5	1A-TU-5-1	YES	675	[320]	3	2	1A-SF2	R	575	[270]	2	10	1A-RF4		X	+	0	[ ]	100	[47]	----

NOTE

ROOMS OR AREAS DO NOT HAVE INDIVIDUAL HUMIDITY CONTROL UNLESS NOTED.

FULLY SPRINKLERED

Revisions: Date:

CONSULTANTS:

Allen&Hoshall
engineering since 1915
1661 International Drive Memphis, TN 38120
901 820 0820 fax 901 683 1001
www.allenhoshall.com

SEAL:

MATHEW GLYNN SINGLETON REGISTERED ENGINEER No. 115084 STATE OF TENNESSEE

ARCHITECT/ENGINEERS:

brg3s architects
11 W. Huling Avenue
Memphis, Tennessee 38103
t 901.260.9600
f 301.531.8042
w brg3s.com

DRAWING TITLE: MECHANICAL SCHEDULES AND NOTES
SCALE: N/A
APPROVED PROJECT DIRECTOR:

PROJECT TITLE: VA BUILDING 1A ENTRANCE EXPANSION
LOCATION: VAMC, Memphis, Tennessee
DATE: January 27, 2014 | CHECKED: JRN | DRAWN: MGS

PROJECT NUMBER: 61660
BUILDING NUMBER: 1A
DRAWING NUMBER: MH-603
DWG. OF

SEQUENCE OF OPERATION FOR 100% OUTSIDE AIR VARIABLE AIR VOLUME AIR HANDLING UNIT

1. GENERAL

1.1 UNIT IS NORMALLY STARTED AND STOPPED REMOTELY AT THE ECC. H-O-A SWITCH SHALL BE KEPT IN THE "AUTO" POSITION. "HAND" AND "OFF" POSITIONS SHALL BE USED ONLY FOR MAINTENANCE. WHEN THE UNIT IS "OFF" D-1 AND D-2 SHALL BE FULLY CLOSED. WHEN THE UNIT IS "ON" D-1 AND D-2 SHALL BE FULLY OPEN AND THE SUPPLY AND EXHAUST FANS SHALL BE ENERGIZED. SPACE TEMPERATURE SHALL BE CONTROLLED IN ACCORDANCE WITH THE FOLLOWING SEQUENCE:

2. TEMPERATURE CONTROL

2.1 SUPPLY AIR TEMPERATURE, SENSED BY T-1, SHALL BE MAINTAINED AT SETPOINT VIA DIGITAL CONTROL PANEL BY MODULATING V-1 OR V-2 IN SEQUENCE.

2.2 WHEN THE OUTSIDE AIR TEMPERATURE, SENSED BY T-2, IS ABOVE THE ACTIVE SUPPLY TEMPERATURE SETPOINT BUT THE OUTSIDE AIR DEWPOINT IS BELOW ITS SETPOINT, THE UNIT SHALL BE IN COOLING MODE. THE UNIT SHALL MODULATE V-1 TO MAINTAIN THE SUPPLY TEMPERATURE SETPOINT.

2.3 WHEN THE OUTSIDE AIR TEMPERATURE, SENSED BY T-2, IS BELOW THE ACTIVE SUPPLY TEMPERATURE SETPOINT, THE UNIT SHALL BE IN HEATING MODE. THE UNIT SHALL MODULATE V-2 TO MAINTAIN THE ACTIVE SUPPLY TEMPERATURE SETPOINT.

3. AIR FLOW CONTROL

3.1 THE SUPPLY AIR FLOW SHALL BE CONTROLLED BY THE DIGITAL CONTROL PANEL MODULATING THE SUPPLY FAN ADJUSTABLE SPEED MOTOR CONTROLLER TO MAINTAIN 3.25" [83mm] OF DUCT STATIC PRESSURE (FIELD ADJUSTABLE), SENSED BY SPS-1.

3.2 THE DIGITAL CONTROL PANEL, USING TOTAL SUPPLY AIR AND RETURN AIR FLOW SIGNALS, SHALL RESET THE RETURN AIR FAN ASD TO MAINTAIN A CONSTANT AIR FLOW DIFFERENCE BETWEEN THE SUPPLY AIR AND THE RETURN AIR EQUAL TO MINIMUM OUTSIDE AIR.

3.3 USING HIGH PRESSURE SENSOR SPS-2, LOCATED AT THE SUPPLY FAN DISCHARGE, SHALL PREVENT THE SUPPLY FAN FROM DEVELOPING OVER 4.25" [108mm] OF STATIC PRESSURE (FIELD ADJUSTABLE). IF STATIC PRESSURE AT SPS-2 DOES EXCEED 4.25" [108mm] THE SUPPLY AND EXHAUST AIR FANS SHALL STOP. SPS-2 SHALL BE HARDWIRED TO THE SUPPLY FAN VFD AND UNIT SHALL BE SHUTDOWN IN HAND,AUTO OR BYPASS MODE. SPS-2 WILL REQUIRE MANUAL RESET AT THE DEVICE.

4. HUMIDITY CONTROL

4.1 WHEN THE DIGITAL CONTROL PANEL IS NOT CALLING FOR HUMIDITY, SENSED BY SUPPLY AIR HUMIDITY SENSOR H-1, 2-WAY "ON-OFF" CONTROL VALVE V-3 SHALL REMAIN CLOSED. WHEN THE DIGITAL CONTROL PANEL IS CALLING FOR HUMIDITY, V-3 SHALL REMAIN OPEN.

4.2 SUPPLY AIR MINIMUM HUMIDITY SHALL HAVE SETPOINT OF 35% RH (ADJ). SUPPLY AIR HUMIDITY SETPOINT SHALL BE MAINTAINED VIA DIGITAL CONTROL PANEL BY MODULATING CONTROL VALVE V-3 TO MAINTAIN THE DESIRED HUMIDITY. DCP SHALL CLOSE VALVE V-3 WHENEVER THE SUPPLY FAN IS OFF. VALVE V-3 SHALL BE INTERLOCKED WITH A TEMPERATURE SWITCH TO KEEP THE HUMIDIFIER OFF UNTIL CONDENSATE TEMPERATURE APPROACHES STEAM TEMPERATURE.

5. FREEZE PROTECTION

5.1 IF THE AIR TEMPERATURE AS SENSED BY T-3 FALLS BELOW 45°F [7°C], AN ALARM SIGNAL SHALL INDICATE AT THE DCP AND ECC. IF THIS TEMPERATURE FALLS BELOW 40°F [4.4°C], AS SENSED BY THE TSL THE SUPPLY AND RETURN FANS SHALL SHUT DOWN AND A CRITICAL ALARM SHALL INDICATE AT THE DIGITAL CONTROL PANEL AND ECC. TSL SHALL BE HARDWIRED TO THE SUPPLY FAN VFD AND UNIT SHALL BE SHUTDOWN IN HAND,AUTO OR BYPASS MODE. TSL WILL REQUIRE MANUAL RESET AT THE DEVICE.

6. AUTOMATIC SHUTDOWN/RESTART

6.1 WHEN SMOKE IS DETECTED BY DUCT SMOKE DETECTORS, SD, THE SUPPLY FAN SHALL SHUT "OFF" AND AN ALARM SIGNAL SHALL BE TRANSMITTED TO THE FIRE ALARM SYSTEM. ALL SMOKE DAMPERS (SD-1) IN THE SUPPLY DUCTS SHALL CLOSE.

6.2 THE EXHAUST FAN SERVING AREA OF THE SUPPLY FAN SHALL CONTINUE TO RUN. SUPPLY FAN SHALL RESTART AND SMOKE DAMPERS SHALL OPEN WHEN FIRE ALARM CIRCUIT IS RESET.

7. EMERGENCY CONSTANT SPEED OPERATION

7.1 UPON FAILURE OF THE VFD, THE SUPPLY AND RETURN FANS SHALL BE STARTED/STOPPED MANUALLY AT THE DIGITAL CONTROL PANEL OR THE ECC THROUGH THE BY-PASS STARTER. FANS SHALL THEN BE OPERATED AT CONSTANT SPEED.

JOB: 61660
BUILDING: 1A-NEW ENTRANCE

PAGE:

SYSTEM: 100% OUTSIDE AIR VAV AIR HANDLER

POINT LEGEND — SYSTEM OUTPUTS (BINARY, ANALOG) — SYSTEM INPUTS (BINARY, ANALOG) — SYSTEM SOFTWARE/CONTROL (ALARM PROCESSING, APPLICATION/FUNCTION)

SYSTEM COMPONENT	POINT ID	ABBREVIATION	PRIORITY/ADD-ALTERNATE NO.	--	ELECTRIC DEVICE	START/STOP	OPEN/CLOSE	--	SPEED COMMAND	VALVE POSITION	DAMPER POSITION	STATUS	ALARM	PRESSURE	LOW HUMIDITY	HIGH STATIC PRESSURE	LOW TEMPERATURE	--	TEMPERATURE (TI)	PRESSURE	POSITION	FLOW	PERCENT	STATIC PRESSURE	CARBON MONOXIDE	HUMIDITY	VACUUM	Local Alarm Panel	Area Alarm Panel	Master Alarm Panel	HIGH LIMIT	LOW LIMIT	--	--	SCHEDULE START/STOP	FUNCTION	DUTY CYCLE	TEMPERATURE ECONOMIZER	ENTHALPY ECONOMIZER	TEMPERATURE RESET	DEMAND LIMITING	TEMPERATURE OVERRIDE	STATIC PRESSURE RESET	--	--	PRESSURE/VOLUME CONTROL	FAILURE MODE	SPACE TEMP. CONTROL	FULL COMMUNICATION	TRENDING	REMARKS
RETURN AIR TEMPERATURE	AI-1	RAT											●						●																															●	T-4
RETURN AIR FLOW (CFM)	AI-2	RAF											●									●									●																			●	FT-2
MIXED AIR TEMPERATURE	AI-3	MAT											●						●																															●	T-5
PRE-HEAT TEMPERATURE	AI-4	PHT											●						●																															●	T-3
COOLING COIL TEMPERATURE	AI-5	CCT											●						●												●																			●	T-6
DISCHARGE AIR TEMPERATURE	AI-6	DAT											●						●																					●										●	T-1
DISCHARGE STATIC PRESSURE	AI-7	DASP											●											●							●												●							●	
DISCHARGE AIR HUMIDITY	AI-8	DAH											●													●					●																			●	H-1
SUPPLY AIR FLOW (CFM)	AI-9	SAF											●									●									●																			●	FT-1
OUTSIDE AIR TEMPERATURE	AI-10	OAT																	●																															●	T-2
OUTSIDE AIR HUMIDITY	AI-11	OAH																								●																								●	T-2
OUTSIDE AIR FLOW (CFM)	AI-12	OAF											●									●									●																			●	FT-3
RETURN LOW PRESSURE	BI-1	RLP												●																																				●	
RETURN FAN STATUS	BI-2	RF-STS										●																																						●	
SUPPLY FAN STATUS	BI-3	SF-STS										●																																						●	
MIXED AIR LOW LIMIT	BI-4	TSL-1															●															●																		●	
STATIC PRESSURE HIGH LIMIT	BI-5	SPS-2														●															●																			●	
SUPPLY FAN VFD ALARM	BI-7	SF-ALA											●																																					●	
RETURN FAN VFD ALARM	BI-8	RF-ALA											●																																					●	
RETURN FAN VFD	AO-1	RF-SPD							●																																								●	●	FULL COMMUNICATION
SUPPLY FAN VFD	AO-2	SF-SPD							●																																								●	●	FULL COMMUNICATION
OUTSIDE AIR DAMPER	AO-3	OAD									●																											●												●	D-1
RETURN AIR DAMPER	AO-4	RAD									●																											●												●	D-2
PRE-HEAT VALVE V-2	AO-7	PHT-V1								●																																								●	V-2
COOLING VALVE V-1	AO-8	CLG-V1								●																																								●	V-1
STEAM HUMIDIFIER VALVE V-4	AO-9	HUM-V4								●																																								●	
RETURN FAN START/STOP	BO-1	RF-SST				●																													●															●	
SUPPLY FAN START/STOP	BO-2	SF-SST				●																													●															●	
STEAM ISOLATION VALVE V-3	BO-3	HUM-ISO-V3					●																				●																							●	V-3

1 POINTS LIST FOR 100% OUTSIDE AIR VAV AIR HANDLING UNIT
NTS

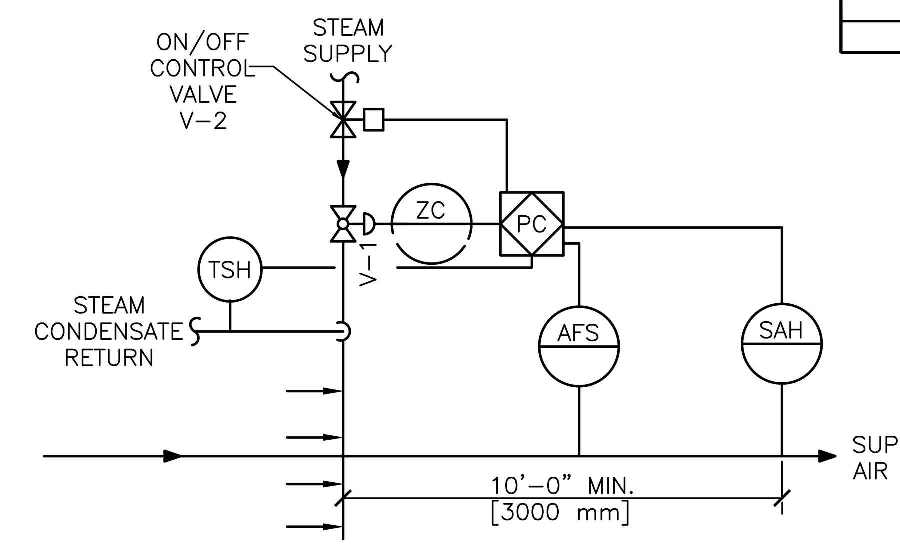

STEAM HUMIDIFIER
SUPPLY AIR HUMIDITY SHALL BE MONITORED. ON A CALL FOR HUMIDIFICATION, HUMIDIFIER VALVE V-1 SHALL MODULATE TO MAINTAIN THE SUPPLY AIR HUMIDITY SET POINT TO A MINIMUM OF 35% (ADJUSTABLE). PRIOR TO ACTIVATION OF V-1, THE ON/OFF CONTROL VALVE V-2 SHALL BE ENABLED THROUGH ECC AND JACKET TEMPERATURE SENSED BY TSH SHALL BE WARM ENOUGH TO PREVENT CONDENSATION. THE AIRFLOW SWITCH SHALL PROVE AIRFLOW BEFORE HUMIDITY CONTROLS ARE ACTIVATED. THE SUPPLY AIR HUMIDITY SENSOR SHALL BE A MINIMUM OF 10' DOWNSTREAM OF THE HUMIDIFIER.

2 STEAM HUMIDIFIER CONTROLS
NTS

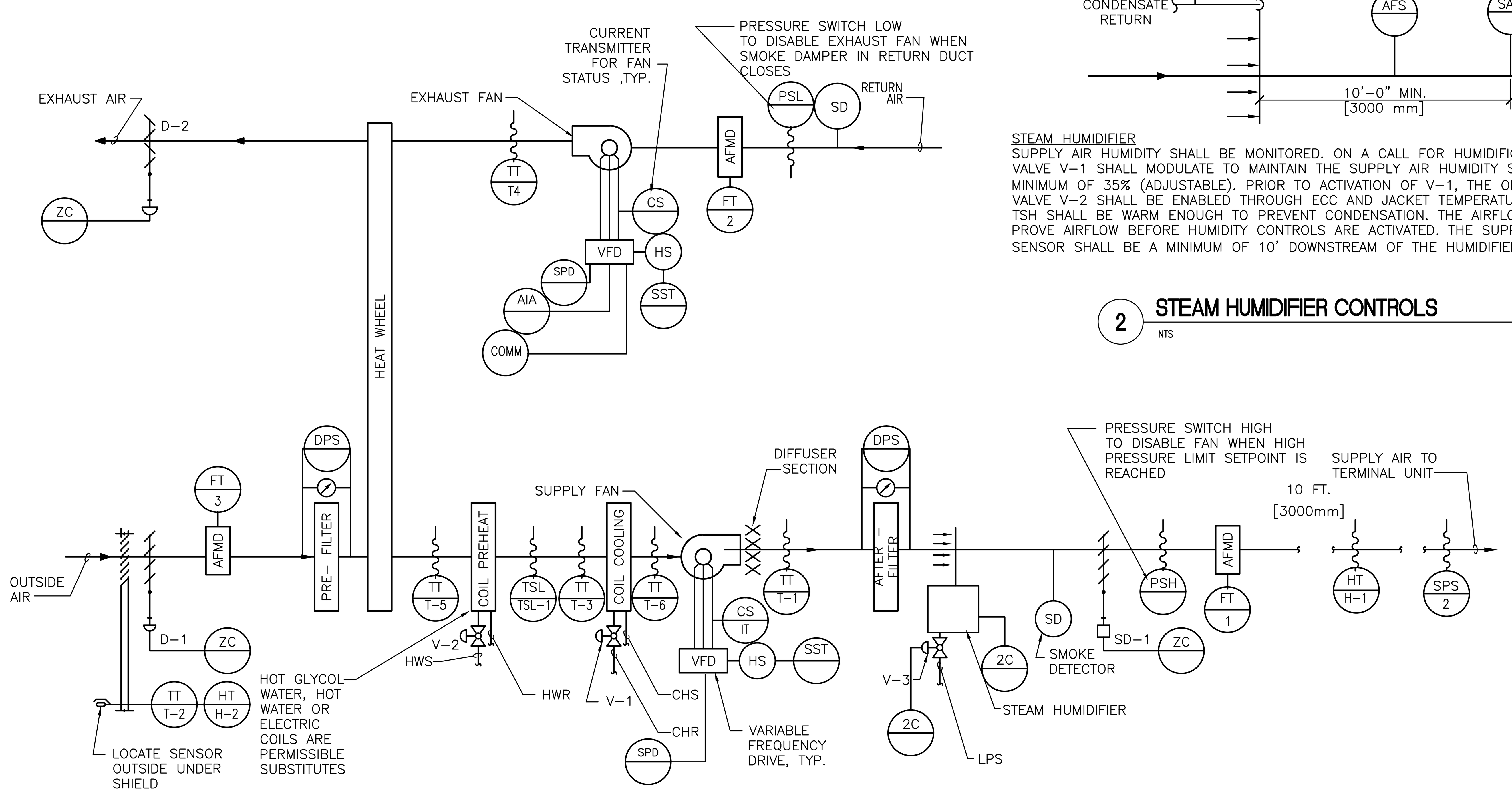

3 100% OUTSIDE AIR VARIABLE AIR VOLUME AIR HANDLING UNIT CONTROL DIAGRAM
NTS

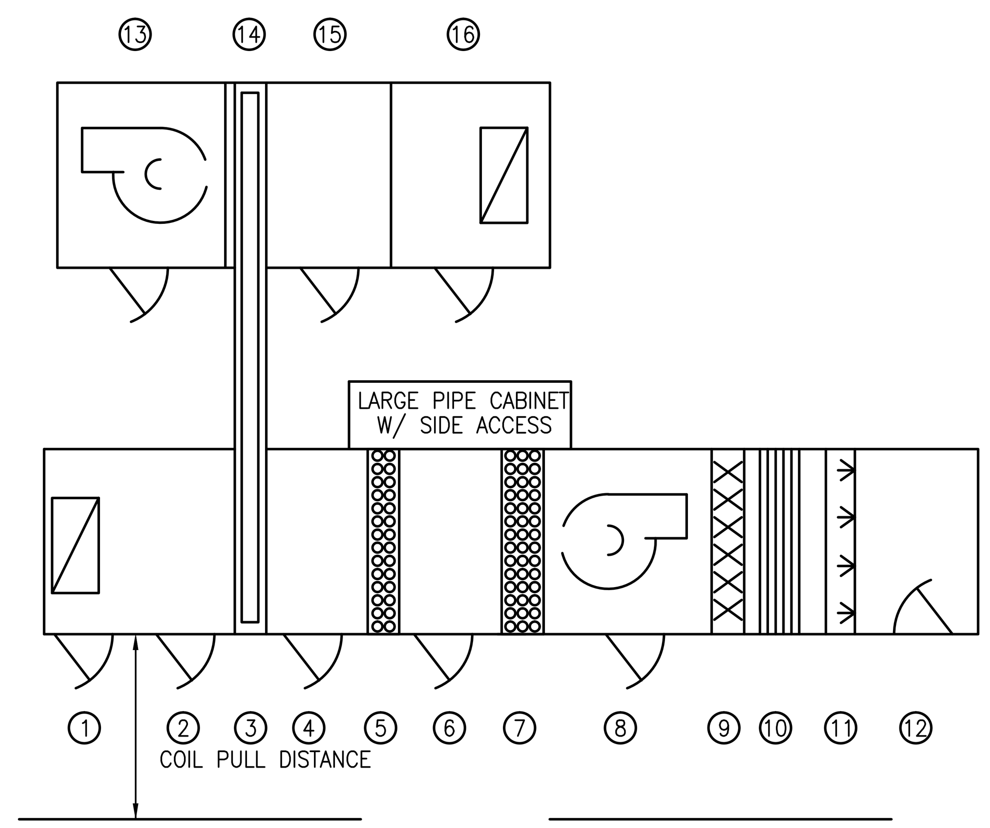

AIR HANDLING UNIT	ITEM
INLET PLENUM/ FILTER BOX	1
ACCESS	2
ENTHALPY WHEEL	3
ACCESS	4
PRE-HEAT COIL	5
ACCESS	6
COOLING COIL	7
SUPPLY FAN	8
DIFFUSER	9
FINAL FILTERS	10
HUMIDIFIER	11
DISCHARGE PLENUM	12
EXHAUST FAN	13
ENTHALPY WHEEL	14
ACCESS	15
INLET PLENUM/ FILTER BOX	16

NOTE:

1. ACCESS DOORS SHALL BE GASKETED AND HINGED TO OPEN AGAINST FAN OPERATING PRESSURE TO PREVENT AIR LEAKAGE.
2. MINIMUM ACCESS DOOR WIDTH SHALL BE 24" [600mm].
3. ACCESS DOOR HEIGHT SHALL BE DETERMINED BY UNIT CASING BUT NOT TO EXCEED 6'-0" [1800mm].
4. ACCESS DOORS ON FAN SUCTION SHALL OPEN OUTWARD.
5. ACCESS DOORS ON FAN DISCHARGE SIZE SHALL OPEN INWARD.

4 100% OUTSIDE AIR VAV AIR HANDLING UNIT DETAIL
NTS

FULLY SPRINKLERED

Revisions: Date:

CONSULTANTS:

Allen&Hoshall
engineering since 1915
1661 International Drive Memphis, TN 38120
901 820 0820 fax 901 683 1001
www.allenhoshall.com

SEAL:

MATTHEW GLYNN SINGLETON REGISTERED ENGINEER No. 115054 STATE OF TENNESSEE

ARCHITECT/ENGINEERS:

brg3s architects
11 W. Huling Avenue
Memphis, Tennessee 38103
t 901.260.9600
f 301.531.8042
w brg3s.com

DRAWING TITLE: MECHANICAL CONTROL DETAILS AND NOTES
SCALE: N/A

APPROVED PROJECT DIRECTOR:

PROJECT TITLE: VA BUILDING 1A ENTRANCE EXPANSION

LOCATION: VAMC, Memphis, Tennessee

DATE: January 27, 2014 | CHECKED: JRN | DRAWN: MGS

PROJECT NUMBER: 61660
BUILDING NUMBER: 1A
DRAWING NUMBER: MH-701
DWG. OF

SEQUENCE OF OPERATION FOR VARIABLE AIR VOLUME AIR HANDLING UNIT WITH MINIMUM OUTSIDE AIR

1. GENERAL

1.1 UNIT IS NORMALLY STARTED AND STOPPED REMOTELY AT THE ECC. H-O-A SWITCH SHALL BE KEPT IN THE "AUTO" POSITION. "HAND" AND "OFF" POSITIONS SHALL BE USED ONLY FOR MAINTENANCE. WHEN THE UNIT IS "OFF" D-1 AND D-3 SHALL BE FULLY CLOSED. WHEN THE UNIT IS "ON" D-1, D-2, AND D-3 SHALL MODULATE IN ACCORDANCE WITH THE FOLLOWING SEQUENCE:

2. TEMPERATURE CONTROL

2.1 SUPPLY AIR TEMPERATURE, SENSED BY T-1, SHALL BE MAINTAINED AT SETPOINT VIA DIGITAL CONTROL PANEL BY MODULATING V-1 OR D-2 AND D-3 OR V-2 IN SEQUENCE.

2.2 WHEN THE TEMPERATURE OF THE OUTSIDE AIR, SENSED BY T-2, IS ABOVE 75°F (ADJ) [23.8°C], THE DIGITAL CONTROL PANEL SHALL PREVENT THE MODULATION OF D-1, D-2, AND D-3 AND SHALL ASSUME THE MINIMUM OUTSIDE AIR POSITION (D-1 AT MINIMUM POSITION, D-2 FULLY OPENED, AND D-3 FULLY CLOSED). THE DIGITAL CONTROL PANEL SHALL MODULATE V-1 TO MAINTAIN THE SUPPLY AIR TEMPERATURE, SENSED BY T-1.

2.3 WHEN THE TEMPERATURE OF THE OUTSIDE AIR, SENSED BY T-2, IS BETWEEN 65°F [18.3°C] AND THE SUPPLY AIR TEMPERATURE SENSED BY T-1, DAMPER D-2 SHALL FULLY CLOSE AND D-1 AND D-3 SHALL BE FULLY OPEN (MAXIMUM OUTSIDE AIR POSITION). THE DIGITAL CONTROL PANEL SHALL MODULATE V-1 TO MAINTAIN THE SUPPLY AIR TEMPERATURE, SENSED BY T-1.

2.4 WHEN THE TEMPERATURE OF THE OUTSIDE AIR, SENSED BY T-2, IS BELOW THE SUPPLY AIR TEMPERATURE, SENSED BY T-1, DAMPERS D-1, D-2 AND D-3 SHALL MODULATE TO MAINTAIN THE SCHEDULED SUPPLY AIR TEMPERATURE. IF D-2 IS OPEN, D-3 IS CLOSED, AND D-1 SET TO MINIMUM OUTSIDE AIR, V-2 SHALL MODULATE OPEN TO MAINTAIN THE SUPPLY AIR TEMPERATURE, SENSED BY T-1.

3. AIR FLOW CONTROL

3.1 THE SUPPLY AIR FLOW SHALL BE CONTROLLED BY THE DIGITAL CONTROL PANEL MODULATING THE SUPPLY FAN ADJUSTABLE SPEED MOTOR CONTROLLER TO MAINTAIN 2.25" [102mm] OF DUCT STATIC PRESSURE (FIELD ADJUSTABLE), SENSED BY SPS-1.

3.2 THE DIGITAL CONTROL PANEL, USING TOTAL SUPPLY AIR AND RETURN AIR FLOW SIGNALS, SHALL RESET THE RETURN AIR FAN ASD TO MAINTAIN A CONSTANT AIR FLOW DIFFERENCE BETWEEN THE SUPPLY AIR AND THE RETURN AIR EQUAL TO MINIMUM OUTSIDE AIR.

3.3 THE HIGH PRESSURE SENSOR SPS-2 LOCATED AT THE SUPPLY FAN DISCHARGE SHALL PREVENT THE SUPPLY FAN FROM DEVELOPING OVER 3.25" [127mm] OF STATIC PRESSURE (FIELD ADJUSTABLE). IF STATIC PRESSURE AT SPS-2 DOES EXCEED 3.25" [127mm] THE SUPPLY AIR FAN SHALL STOP. SPS-2 SHALL BE HARDWIRED TO THE SUPPLY FAN VFD AND UNIT SHALL BE SHUTDOWN IN HAND, AUTO OR BYPASS MODE. SPS-2 WILL REQUIRE MANUAL RESET AT THE DEVICE.

4. HUMIDITY CONTROL

4.1 WHEN THE DIGITAL CONTROL PANEL IS NOT CALLING FOR HUMIDITY, SENSED BY SUPPLY AIR HUMIDITY H-1, 2-WAY "ON-OFF" CONTROL VALVE V-3 SHALL REMAIN CLOSED. WHEN THE DIGITAL CONTROL PANEL IS CALLING FOR HUMIDITY, V-3 SHALL REMAIN OPEN.

4.2 SUPPLY AIR MINIMUM HUMIDITY SHALL HAVE SETPOINT OF 35% RH (ADJ). SUPPLY AIR HUMIDITY SETPOINT SHALL BE MAINTAINED VIA DIGITAL CONTROL PANEL BY MODULATING CONTROL VALVE V-3 TO MAINTAIN THE DESIRED HUMIDITY. DCP SHALL CLOSE VALVE V-3 WHENEVER THE SUPPLY FAN IS OFF. VALVE V-3 SHALL BE INTERLOCKED WITH A TEMPERATURE SWITCH TO KEEP THE HUMIDIFIER OFF UNTIL CONDENSATE TEMPERATURE APPROACHES STEAM TEMPERATURE.

5. FREEZE PROTECTION

5.1 IF THE AIR TEMPERATURE AS SENSED BY T-3 FALLS BELOW 45°F [7°C], AN ALARM SIGNAL SHALL INDICATE AT THE DCP AND ECC. IF THIS TEMPERATURE FALLS BELOW 40°F [4.4°C], AS SENSED BY THE TSL THE SUPPLY AND RETURN FANS SHALL SHUT DOWN AND A CRITICAL ALARM SHALL INDICATE AT THE DIGITAL CONTROL PANEL AND ECC. TSL SHALL BE HARDWIRED TO THE SUPPLY FAN VFD AND UNIT SHALL BE SHUTDOWN IN HAND,AUTO OR BYPASS MODE. TSL WILL REQUIRE MANUAL RESET AT THE DEVICE.

6. AUTOMATIC SHUTDOWN/RESTART

6.1 WHEN SMOKE IS DETECTED BY DUCT SMOKE DETECTOR, SD, THE SUPPLY AND RETURN FANS SHALL SHUT "OFF" AND AN ALARM SIGNAL SHALL BE TRANSMITTED TO THE FIRE ALARM SYSTEM. ALL SMOKE DAMPERS, (SD-1 & SD-2) IN THE SUPPLY AND RETURN DUCTS SHALL CLOSE.

6.2 EXHAUST FANS SERVING AREA OF THE SUPPLY FAN SHALL CONTINUE TO RUN. SUPPLY AND RETURN FANS SHALL RESTART AND SMOKE DAMPERS SHALL OPEN WHEN FIRE ALARM CIRCUIT IS RESET.

7. EMERGENCY CONSTANT SPEED OPERATION

7.1 UPON FAILURE OF THE VFD, THE SUPPLY AND RETURN FANS SHALL BE STARTED/STOPPED MANUALLY AT THE DIGITAL CONTROL PANEL OR THE ECC THROUGH THE BY-PASS STARTER. FANS SHALL THEN BE OPERATED AT CONSTANT SPEED.

JOB: 61660
BUILDING: 1A-NEW ENTRANCE
PAGE:

SYSTEM: VAV AIR HANDLER W/ MIN OUTSIDE AIR

POINT LEGEND — SYSTEM OUTPUTS (BINARY, ANALOG) — SYSTEM INPUTS (BINARY, ANALOG) — SYSTEM SOFTWARE/CONTROL (ALARM PROCESSING, APPLICATION/FUNCTION)

SYSTEM COMPONENT	POINT ID	ABBREVIATION	PRIORITY/ADD-ALTERNATE NO.	--	ELECTRIC DEVICE	START/STOP	OPEN/CLOSE	--	SPEED COMMAND	VALVE POSITION	DAMPER POSITION	STATUS	ALARM	PRESSURE	LOW HUMIDITY	HIGH STATIC PRESSURE	LOW TEMPERATURE	--	TEMPERATURE (TI)	PRESSURE	POSITION	FLOW	PERCENT	STATIC PRESSURE	CARBON MONOXIDE	HUMIDITY	VACUUM	Local Alarm Panel	Area Alarm Panel	Master Alarm Panel	HIGH LIMIT	LOW LIMIT	--	--	SCHEDULE START/STOP	FUNCTION	DUTY CYCLE	TEMPERATURE ECONOMIZER	ENTHALPY ECONOMIZER	TEMPERATURE RESET	DEMAND LIMITING	TEMPERATURE OVERRIDE	STATIC PRESSURE RESET	--	--	PRESSURE/VOLUME CONTROL	FAILURE MODE	SPACE TEMP. CONTROL	FULL COMMUNICATION	TRENDING	REMARKS
RETURN AIR TEMPERATURE	AI-1	RAT											●						●																															●	T-4
RETURN AIR FLOW (CFM)	AI-2	RAF											●									●									●																			●	FT-2
MIXED AIR TEMPERATURE	AI-3	MAT											●						●																															●	T-5
PRE-HEAT TEMPERATURE	AI-4	PHT											●						●																															●	T-3
COOLING COIL TEMPERATURE	AI-5	CCT											●						●												●																			●	T-6
DISCHARGE AIR TEMPERATURE	AI-6	DAT											●						●																				●											●	T-1
DISCHARGE STATIC PRESSURE	AI-7	DASP											●											●							●												●							●	
DISCHARGE AIR HUMIDITY	AI-8	DAH											●													●																								●	H-1
SUPPLY AIR FLOW (CFM)	AI-9	SAF											●									●									●																			●	FT-1
OUTSIDE AIR TEMPERATURE	AI-10	OAT																	●																															●	T-2
OUTSIDE AIR FLOW (CFM)	AI-11	OAF											●									●									●																			●	FT-3
RETURN LOW PRESSURE	BI-1	RLP												●																																				●	
RETURN FAN STATUS	BI-2	RF-STS										●																																						●	
SUPPLY FAN STATUS	BI-3	SF-STS										●																																						●	
MIXED AIR LOW LIMIT	BI-4	TSL-1															●															●																		●	
STATIC PRESSURE HIGH LIMIT	BI-5	SPS-2														●															●																			●	
SUPPLY FAN VFD ALARM	BI-7	SF-ALA											●																																					●	
RETURN FAN VFD ALARM	BI-8	RF-ALA											●																																					●	
RETURN FAN VFD	AO-1	RF-SPD							●																																								●	●	FULL COMMUNICATION
SUPPLY FAN VFD	AO-2	SF-SPD							●																																								●	●	FULL COMMUNICATION
OUTSIDE AIR DAMPER	AO-3	OAD									●																											●												●	D-1
RETURN AIR DAMPER	AO-4	RAD									●																											●												●	D-2
EXHAUST AIR DAMPER	AO-5	EAD									●																											●												●	D-3
MINIMUM OUTSIDE AIR DAMPER	AO-6	MIN-OAD									●																																							●	D-4
PRE-HEAT VALVE V-2	AO-7	PHT-V1								●																																								●	V-2
COOLING VALVE V-1	AO-8	CLG-V1								●																																								●	V-1
STEAM HUMIDIFIER VALVE V-4	AO-9	HUM-V4								●																																								●	
RETURN FAN START/STOP	BO-1	RF-SST				●																													●															●	
SUPPLY FAN START/STOP	BO-2	SF-SST				●																													●															●	
STEAM ISOLATION VALVE V-3	BO-3	HUM-ISO-V3					●																						●																					●	V-3

1 POINTS LIST FOR VAV AIR HANDLING UNIT WITH MINIMUM OUTSIDE AIR

NTS

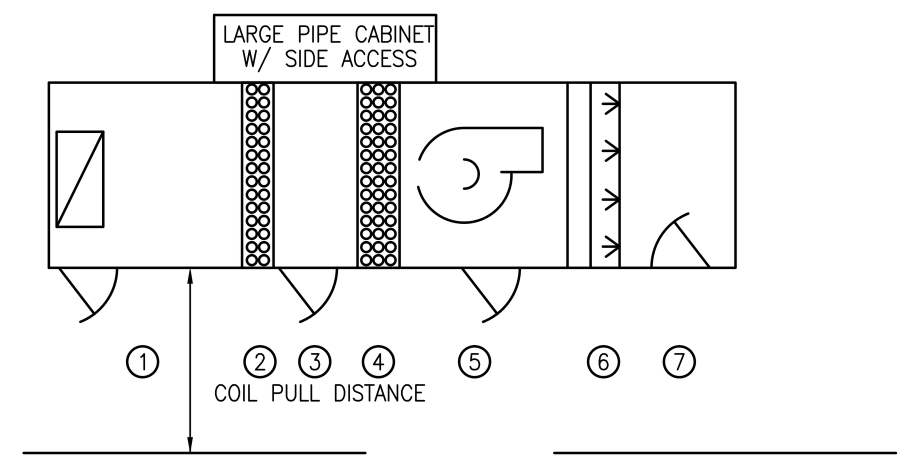

AIR HANDLING UNIT	ITEM
MIXING/FILTER BOX	1
PRE-HEAT COIL	2
ACCESS	3
COOLING COIL	4
SUPPLY FAN	5
HUMIDIFIER	6
DISCHARGE PLENUM	7

NOTE:

1. ACCESS DOORS SHALL BE GASKETED AND HINGED TO OPEN AGAINST FAN OPERATING PRESSURE TO PREVENT AIR LEAKAGE.
2. MINIMUM ACCESS DOOR WIDTH SHALL BE 24" [600mm].
3. ACCESS DOOR HEIGHT SHALL BE DETERMINED BY UNIT CASING BUT NOT TO EXCEED 6'-0" [1800mm].
4. ACCESS DOORS ON FAN SUCTION SHALL OPEN OUTWARD.
5. ACCESS DOORS ON FAN DISCHARGE SIZE SHALL OPEN INWARD.

2 VAV AIR HANDLING UNIT W/ MIN OUTSIDE AIR DETAIL

NTS

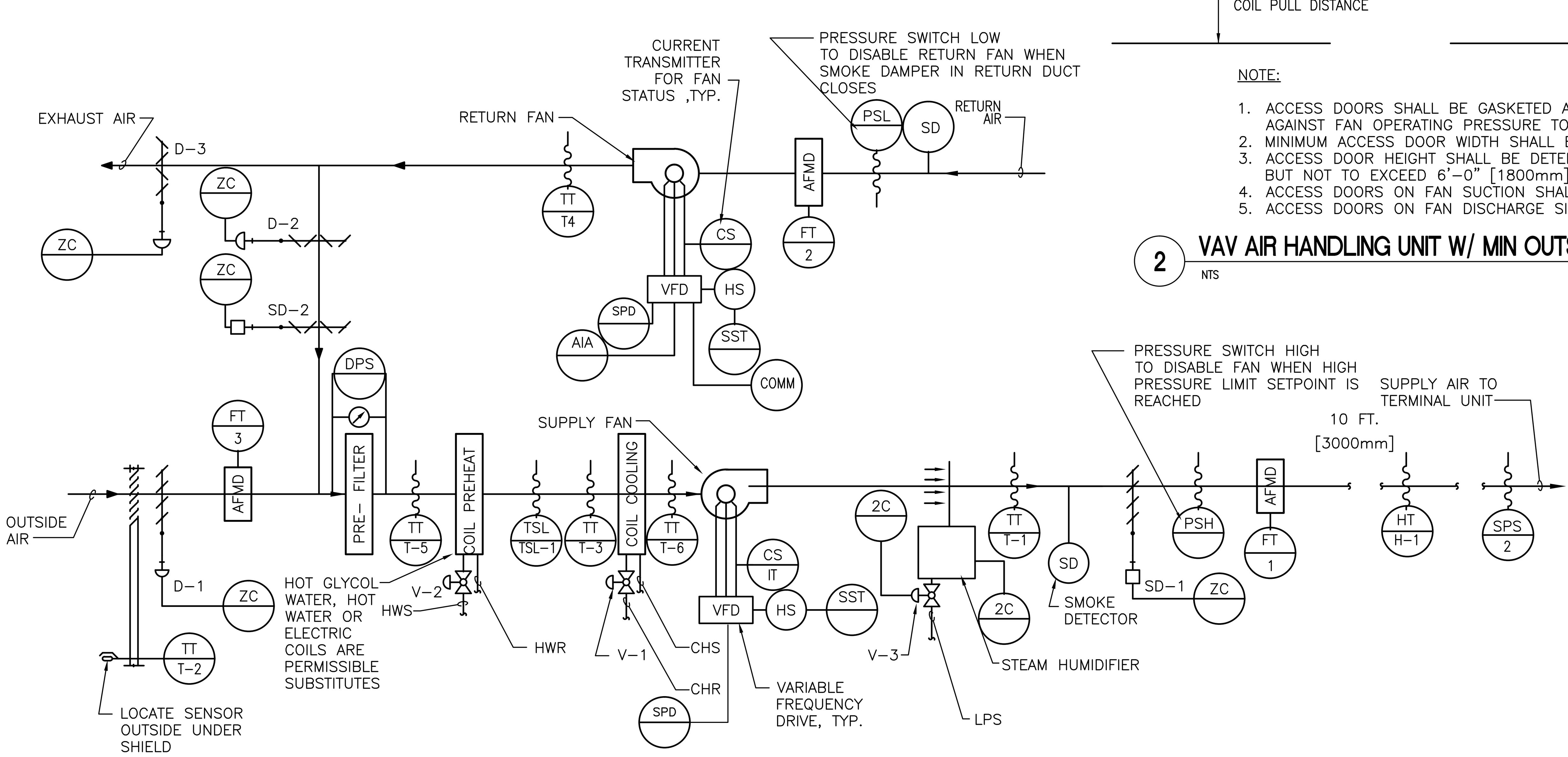

3 VARIABLE AIR VOLUME AIR HANDLING UNIT WITH MINIMUM OUTSIDE AIR CONTROL DIAGRAM

NTS

CONTROL VALVE SHALL BE 2-WAY FOR ALL VAV TERMINAL UNITS.

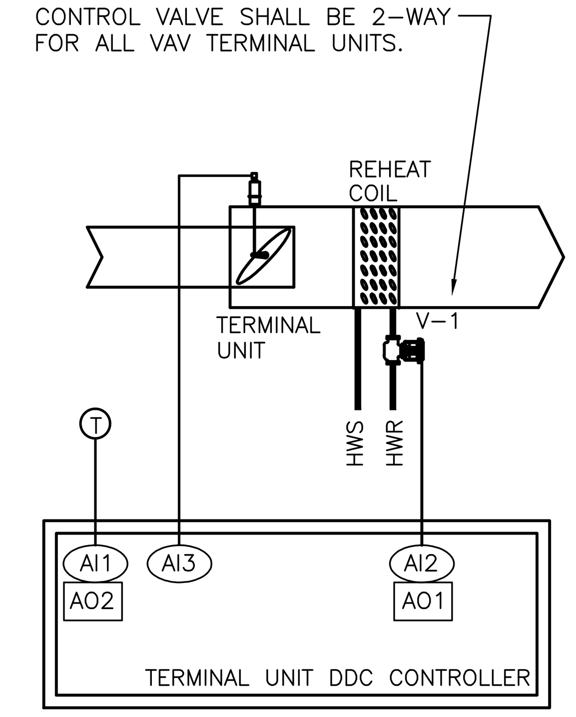

TERMINAL UNIT W/ REHEAT		
LOCAL DDC CONTROLLER		
INPUTS		
ANALOG	AI1	SPACE TEMPERATURE SENSOR
ANALOG	AI2	HOT WATER CONTROL VALVE STATUS (V-1)
ANALOG	AI3	TERMINAL UNIT STATUS
DIG.		
OUTPUTS		
ANALOG	AO1	HOT WATER CONTROL VALVE (V-1)
ANALOG	AO2	TERMINAL UNIT CONTROLLER
DIG.		

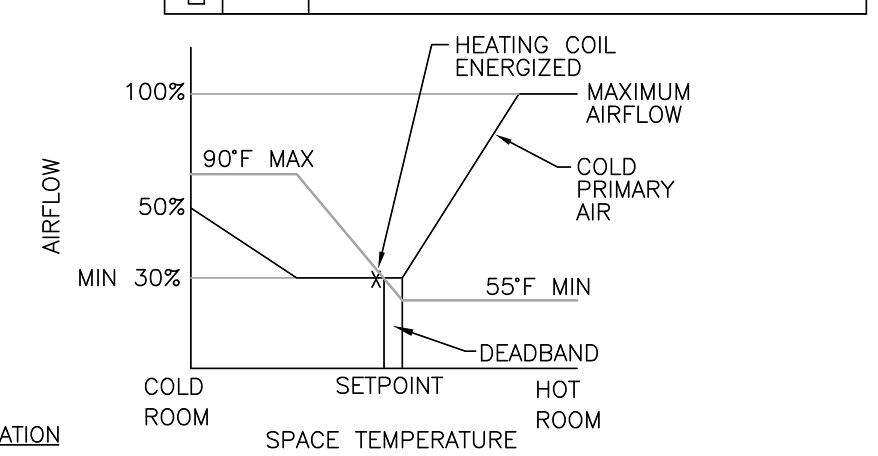

SEQUENCE OF OPERATION

1. GENERAL
   1.1. UNIT IS NORMALLY CONTROLLED BY DDC CONTROL PANEL OR REMOTELY AT DDC SYSTEM. ROOM THERMOSTAT SHALL CONTROL PRESSURE INDEPENDENT DDC TERMINAL UNIT CONTROLLER.
2. TEMPERATURE CONTROL
   2.1. UPON DROP IN TEMPERATURE BELOW THERMOSTAT SETPOINT, TERMINAL AIRFLOW SHALL BE REDUCED TO A MINIMUM POSITION BY MODULATING THE TERMINAL UNIT ACTUATOR. UPON A FURTHER DROP IN ROOM TEMPERATURE, THE HOT WATER VALVE SHALL BE MODULATED OPEN. IF THE HOT WATER VALVE IS MODULATED FULLY OPEN AND THE SETPOINT HAS NOT BEEN MET, THE TERMINAL AIRFLOW SHALL MODULATE OPEN, UP TO A MAXIMUM OF 50% AIRFLOW.
   2.2. UPON A RISE IN ROOM TEMPERATURE, THE SEQUENCE SHALL BE REVERSED.
3. SPACE TEMPERATURE ALARM
   3.1. UPON THE SENSING OF SPACE TEMPERATURE 4°F ABOVE OR 4°F (ADJ) BELOW THE THERMOSTAT SETPOINT FOR A TIME PERIOD OF 5 MINUTES (ADJUSTABLE), AN ALARM CONDITION SHALL BE SIGNALED AT THE DDC SYSTEM.

4 VAV TERMINAL UNIT CONTROL DIAGRAM

NTS

FULLY SPRINKLERED

Revisions: Date:

CONSULTANTS:

Allen&Hoshall
engineering since 1915
1661 International Drive Memphis, TN 38120
901 820 0820 fax 901 683 1001
www.allenhoshall.com

SEAL:

ARCHITECT/ENGINEERS:

brg3s architects
11 W. Huling Avenue
Memphis, Tennessee 38103
t 901.260.9600
f 301.531.8042
w brg3s.com

DRAWING TITLE: MECHANICAL CONTROL DETAILS AND NOTES
SCALE: N/A
APPROVED PROJECT DIRECTOR:

PROJECT TITLE: VA BUILDING 1A ENTRANCE EXPANSION
LOCATION: VAMC, Memphis, Tennessee
DATE: January 27, 2014
CHECKED: JRN
DRAWN: MGS

PROJECT NUMBER: 61660
BUILDING NUMBER: 1A
DRAWING NUMBER: MH-702
DWG. OF