ELECTRICAL SYMBOLS - LIGHTING PLAN

- LIGHT FIXTURE CEILING MOUNTED
- LIGHT FIXTURE RECESSED CEILING MOUNTED
- LIGHT FIXTURE, EMERGENCY
- LIGHT FIXTURE WALL MOUNTED
- LIGHT FIXTURE POLE MOUNTED
- (A) LIGHT FIXTURE, RECESSED LED/FLUORESCENT, 2'x4' [610x1220mm]; LETTER INDICATES TYPE.
- (B) LIGHT FIXTURE, RECESSED LED/FLUORESCENT, 1'x4' [305x1220mm]; LETTER INDICATES TYPE.
- (C) LIGHT FIXTURE, RECESSED LED/FLUORESCENT, 1'x8' [305x2439mm]; LETTER INDICATES TYPE.
- (A) LIGHT FIXTURE, SURFACE MOUNTED LED/FLUORESCENT, 2'x4' [610x1220mm]; LETTER INDICATES TYPE.
- (B) LIGHT FIXTURE, SURFACE MOUNTED LED/FLUORESCENT, 1'x4' [305x1220mm]; LETTER INDICATES TYPE.
- (C) LIGHT FIXTURE, SURFACE MOUNTED LED/FLUORESCENT, 1'x8' [305x2439mm]; LETTER INDICATES TYPE.
- LIGHT FIXTURE, LED/FLUORESCENT EMERGENCY; LETTER INDICATES TYPE.
- (E) LIGHT FIXTURE, RECESSED LED/FLUORESCENT, 2'x2' [610x610mm]; LETTER INDICATES TYPE.
- (E) LIGHT FIXTURE, SURFACE MOUNTED LED/FLUORESCENT, 2'x2' [610x610mm]; LETTER INDICATES TYPE.
- EXIT SIGN, WALL MOUNTED WITH DIRECTIONAL ARROWS AND FACES AS SHOWN
- EXIT SIGN, CEILING MOUNTED WITH DIRECTIONAL ARROWS AND FACES AS SHOWN
- LIGHT FIXTURE, DIRECTIONAL

S SWITCH

BLANK = SINGLE POLE	2 = DOUBLE POLE
3 = THREE-WAY	4 = FOUR-WAY
D = WATTSTOPPER "LMDM-101"	K = KEY OPERATED
LV= LOW VOLTAGE	L = LOCK
LM= LOW VOLTAGE MASTER	P = WITH PILOT LIGHT
PB= PUSH BUTTON STATION	RC= REMOTE CONTROL
T = TIMER OPERATED	WP= WEATHER PROOF
X = EXPLOSION PROOF	Mo= OCCUPANCY SENSOR

S_{IR} WALL SWITCH WITH INFRARED OCCUPANCY SENSOR, WATTSTOPPER "LMPW-100" - MTD. 48" AFF, UOI.

IR CEILING MTD, LOW VOLTAGE INFRARED OCCUPANCY SENSOR, WATTSTOPPER "LMPC-100"

ELECTRICAL SYMBOLS - POWER PLAN

- MOTOR, SIZE AS INDICATED
- T TRANSFORMER
- EARTH GROUND OR CONNECTION TO NEC APPROVED GROUND
- BRANCH CIRCUIT HOMERUN. LINES INDICATE NUMBER OF CIRCUITS; NEUTRAL, AND SWITCH LEG CONDUCTORS. ONE SEPARATE GREEN GROUNDING CONDUCTOR SHALL BE PROVIDED FOR EACH HOMERUN; NOT SHOWN
- PB PULL BOX
- 120/208V 3P, 4W PANELBOARD CABINET, FLUSH/SURFACE MOUNTED
- 277/480V 3P, 4W PANELBOARD CABINET, FLUSH\SURFACE MOUNTED
- RECEPTACLE, DUPLEX
- RECEPTACLE, DOUBLE DUPLEX
- RECEPTACLE, DUPLEX WITH GROUND FAULT CIRCUIT INTERRUPTER.
- HEAVY DUTY 20A RECEPTACLE, MTD. 18" AFF, UOI. COORDINATE EXACT REQUIREMENTS WITH VA I.T. DEPARTMENT.
- FLUSH MOUNTED FLOOR DUPLEX RECEPTACLE
- 3-GANG COMPARTMENT BOX IN FLOOR FOR TELEPHONE, DATA & RECEPTACLE.
- DISCONNECT SWITCH, FUSED
- DISCONNECT SWITCH, UNFUSED, UOI
- STARTER, COMBINATION WITH DISCONNECT SWITCH
- VFD VARIABLE FREQUENCY DRIVE
- C LIGHTING CONTACTOR PANEL - PROVIDE WATTSTOPER LP8S-4-115, OR APPROVED EQUAL.
- NOTE INDICATION
- P PHOTOCELL
- M 120V CONNECTION TO VAV BOX

ELECTRICAL SYMBOLS - COMMUNICATIONS

- CS CARD SWIPE, MTD 48" AFF. PROVIDE RECEPTACLE MTD ABOVE ACCESSIBLE CEILING FOR ACCESS CONTROL POWER. ROUTE CAT6 BACK TO COMMUNICATIONS ROOM. COORDINATE WITH OWNER.
- VDS VIDEO DOOR STATION - MOUNTED 48" AFF, UOI. PROVIDE A MASONRY JUNCTION BOX AND A 3/4" CONDUIT UP TO NEAREST ACCESSIBLE CEILING SPACE.
- (S) SPEAKER, CLG MTD
- (V) VOLUME CONTROL, MTD 48" AFF
- COMBINATION OUTLET FOR DATA AND TELEPHONE CABLE MTD. 18" AFF, UOI, - RUN 1" CONDUIT UP TO NEAREST ACCESSIBLE CEILING SPACE. PROVIDE COVERPLATE TO MATCH WIRING DEVICE PLATES. PROVIDE 4 OUTLETS AND ROUTE (4) CAT 6 CABLES BACK TO DATA CLOSET.
- W OUTLET FOR WALL MTD. TELEPHONE, MTD. 48" AFF, UOI - RUN 3/4" CONDUIT UP TO NEAREST ACCESSIBLE CEILING SPACE. PROVIDE 1 OUTLET AND ROUTE (1) CAT 6 CABLE TO COMMUNICATIONS ROOM.
- OUTLET FOR WALL MTD. TV/DATA CONNECTION - RUN 1" CONDUIT UP TO NEAREST ACCESSIBLE CEILING SPACE. ROUTE (1) COAXIAL AND (1) CAT6 TO COMMUNICATIONS ROOM.
- C CONNECTION FOR WALL MTD., COMPUTER CONTROLLED CAMERA. MTD. 48" AFF. PROVIDE SECURELY MOUNTED BOX AND ROUTE 3/4"C TO NEAREST ACCESSIBLE CEILING SPACE. SEE COMMUNICATION PLANS FOR CABELING REQURIEMENTS.
- Q CONNECTION FOR WALL MTD., CUEING INDICATOR. MTD. 90" AFF, UOI. PROVIDE SECURELY MOUNTED BOX AND ROUTE 3/4"C TO NEAREST ACCESSIBLE CEILING SPACE. SEE COMMUNICATION PLANS FOR CABELING REQURIEMENTS.
- SECURITY CAMERA LOCATION. PROVIDE SECURELY MOUNTED BOX AND ROUTE 3/4"C TO NEAREST ACCESSIBLE CEILING SPACE. SEE COMMUNICATION PLANS FOR CABELING REQUIREMENTS.
- PP PUSHBUTTON FOR DOOR STRIKE CONTROL MTD. 48"AFF. EXTEND 3/4" CONDUIT TO CORRIDOR CEILING.
- PC PANIC BUTTON - PROVIDE SINGLE GANG J-BOX MTD. 48"AFF EXTEND 3/4" CONDUIT TO CORRIDOR CEILING.
- IC INTERCOM STATION - MOUNTED 48" AFF, UOI. PROVIDE A SECURELY MOUNTED JUNCTION BOX AND A 3/4" CONDUIT UP TO NEAREST ACCESSIBLE CEILING SPACE.

ELECTRICAL ABBREVIATIONS

1PH	SINGLE-PHASE
1P	SINGLE POLE
2/C	TWO-CONDUCTOR
3/C	THREE-CONDUCTOR
3PH	THREE-PHASE
4/C	FOUR-CONDUCTOR
4W	FOUR-WIRE
A/C UNIT	AIR CONDITIONING UNIT
A/E	ARCHITECT/ENGINEER
AAP	ALARM ANNUNCIATOR PANEL
AC	ALTERNATING CURRENT OR ARMORED CABLE
ACC	ACCESSIBLE
ADDL	ADDITIONAL
ADJ	ADJACENT, ADJOINING
ADO	AUTOMATIC DOOR OPENER
AF	AMPERE FRAME OR AMP FUSE
AFC	ABOVE FINISHED COUNTER, AUTOMATIC FREQUENCY CONTROL, OR AVAILABLE FAULT CURRENT
AFF	ABOVE FINISHED FLOOR
AFG	ABOVE FINISHED GRADE
AH	AMPERE HOUR
AHJ	AUTHORITY HAVING JURISDICTION
AIC	AMPERE INTERRUPTING CAPACITY
ALT	ALTERNATE
AMB OR A	AMBIENT
AMP	AMPERE
ARCH	ARCHITECT
ASC	AMPS SHORT CIRCUIT
AT	AMPERE TRIP
ATS	AUTOMATIC TRANSFER SWITCH
AUTO	AUTOMATIC
AV	AUDIO VISUAL
BAT	BATTERY
BC	BARE COPPER
BD	BOARD
BFF	BELOW FINISH FLOOR
BIL	BASIC INSULATION LEVEL
BLDG	BUILDING
BRKR	BREAKER
BYP	BY PASS
C	CONDUIT
CAB	CABINET
CALC	CALCULATE
CAP	CAPACITY
CAT	CATALOG
CATV	COMMUNITY ANTENNA TELEVISION
CCR	CONTROL CONTACTOR
CCTV	CLOSED CIRCUIT TELEVISION
cd	CANDELA
CD	CONSTRUCTION DOCUMENTS
CF	CONTRACTOR FURNISHED
CF/CI	CONTRACTOR FURNISHED/CONTRACTOR INSTALLED
CF/OI	CONTRACTOR FURNISHED/OWNER INSTALLED
CFE	CONTRACTOR FURNISHED EQUIPMENT
CHW	CHILLED WATER
CHWP	CHILLED WATER PUMP
CKT	CIRCUIT
CKT BRKR	CIRCUIT BREAKER
CLF	CURRENT LIMITING FUSE
CLG	CEILING
CMU	CONCRETE MASONRY UNIT
COAX	COAX CABLE
COMM	COMMUNICATION
COMPT	COMPARTMENT
CONC	CONCRETE
CONT	CONTINUE
CPT	CONTROL POWER TRANSFORMER
CRI	COLOR RENDERING INDEX
CT	CURRENT TRANSFORMER
CTV	CABLE TELEVISION
CU	COPPER
CU FT	CUBIC FEET
CUR	CURRENT
DB	DECIBEL OR DIRECT BURIAL
DC	DIRECT CURRENT
DCP	DIMMER CONTROL PANEL
DEG C	DEGREES CELSIUS
DEG F	DEGREES FAHRENHEIT
DEMO	DEMOLITION
DIAG	DIAGRAM
DISC	DISCONNECT
DISTR	DISTRIBUTION
DISTR PNL	DISTRIBUTION PANEL
DMR SW	DIMMER SWITCH
DN	DOWN
DPDT	DOUBLE POLE, DOUBLE THROW
DPST	DOUBLE POLE, SINGLE THROW
DRSW	DOOR SWITCH
DS	DISCONNECT SWITCH
DWG	DRAWING
EC	EMPTY CONDUIT
EG	EQUIPMENT GROUND
EL	ELEVATION
ELEC	ELECTRIC OR ELECTRICAL
ELEV	ELEVATOR
EMCP	EMERGENCY MONITORING CONTROL PANEL
EMER	EMERGENCY
EMI	ELECTROMAGNETIC INTERFERENCE
EMT	ELECTRICAL METALLIC TUBING
ENCL	ENCLOSURE
EPO	EMERGENCY POWER OFF
EPRF	EXPLOSION PROOF
ESMT	EASEMENT
EWC	ELECTRIC WATER COOLER
EWH	ELECTRIC WATER HEATER
EXIST	EXISTING
FC	FOOTCANDLE
FI	FILM ILLUMINATOR
FIXT	FIXTURE
FLA	FULL LOAD AMPS
FLEX	FLEXIBLE METALLIC CONDUIT
FLT	FLOODLIGHT
FLUOR	FLUORESCENT
FLUOR FIX	FLUORESCENT FIXTURE
FOUTT	TELEPHONE FLOOR OUTLET
FP	FIRE PROTECTION
FT	FEET OR FOOT
FU SW	FUSED SWITCH
FVNR	FULL VOLTAGE NON-REVERSING
FVR	FULL VOLTAGE REVERSING
G OR GND	GROUND OR GENERATOR
GEN	GENERATOR
GFCI	GROUND FAULT CIRCUIT INTERRUPTER
GTB	GROUND TERMINAL BOX
HID	HIGH INTENSITY DISCHARGE
HOA	HAND-OFF-AUTOMATIC
HP	HORSEPOWER
HT	HEIGHT
HZ	HERTZ
IESNA	ILLUMINATION ENGINEERING SOCIETY OF NORTH AMERICA
IMC	INTERMEDIATE METAL CONDUIT
INCAND	INCANDESCENT
IR	INFRARED
IWH	INSTANTANEOUS WATER HEATER
J-BOX	JUNCTION BOX
kV	KILOVOLT
kVA	KILOVOLT AMPERE
kVAH	KILOVOLT AMPERE PER HOUR
kVAR	KILOVOLT AMPERE REACTIVE
kW	KILOWATT
kWH	KILOWATT HOUR
kWHM	KILOWATT HOUR METER
LED	LIGHT EMITTING DIODE
LF	LINEAR FEET (FOOT)
LM	LUMEN
LP	LIGHT POLE
LPS	LOW PRESSURE SODIUM
LRA	LOCKED ROTOR AMPS
LTCP	LOCAL TEMPERATURE CONTROL PANEL
LT	LIGHT
LTG	LIGHTING
LTG PNL	LIGHTING PANEL
LTNG	LIGHTNING
LV	LOW VOLTAGE
MAX	MAXIMUM
MC	METAL-CLAD
MCA	MINIMUM CIRCUIT AMPS
MCB	MAIN CIRCUIT BREAKER
MCC	MOTOR CONTROL CENTER
MDP	MAIN DISTRIBUTION PANEL
MECH	MECHANICAL
MG	MOTOR GENERATOR
MH	MANHOLE
MIN	MINIMUM
MOCP	MAXIMUM OVERCURRENT PROTECTION
MLO	MAIN LUGS ONLY
MT	MOUNT
MTD	MOUNTED
MTG	MOUNTING
MTS	MANUAL TRANSFER SWITCH
MV	MEDIUM VOLTAGE
MVA	MEGAVOLT-AMPERE
MW	MEGAWATT MICROWAVE
NA	NOT APPLICABLE
NEC	NATIONAL ELECTRICAL CODE
NEMA	NATIONAL ELECTRICAL MANUFACTURERS ASSOCIATION
NEUT OR N	NEUTRAL
NFPA	NATIONAL FIRE PROTECTION ASSOCIATION
NIC	NOT IN CONTRACT
NL	NIGHT LIGHT
NO	NORMALLY OPEN
NS	NO SCALE
NTS	NOT TO SCALE
OC	ON CENTER
OD	OUTSIDE DIAMETER
OL	OVERLOAD
P	POLE
PA	PUBLIC ADDRESS
PB	PANELBOARD, PULL BOX, OR PUSHBUTTON
PBPU	PREFABRICATED BEDSIDE PATIENT UNIT
PCB	POLYCHLORINATED BIPHENYL
PEC	PHOTOELECTRIC CELL
PED	PEDESTAL
PEND	PENDANT
PF	POWER FACTOR
PH	PHASE
PNL	PANEL
POD	POWER OPERATED DAMPER
PT	POTENTIAL TRANSFORMER
PTRV	POWER TYPE ROOF VENTILATION
PVC	POLYVINYL CHLORIDE (PLASTIC)
PWR	POWER
RCP	REFLECTED CEILING PLAN
REC	RECESSED
RECPT	RECEPTACLE
RGS	RIGID GALVANIZED STEEL
RM	ROOM
RMS	ROOT MEAN SQUARE
REQD	REQUIRED
SCC	SHORT CIRCUIT CAPACITY
SES	SERVICE ENTRANCE SECTION
SD	SMOKE DETECTOR
SF	SQUARE FOOT (FEET)
SHT	SHEET
SI	INTERNATIONAL SYSTEM OF UNITS
SPEC	SPECIFICATION
SPST	SINGLE POLE, SINGLE THROW
ST	SHUNT TRIP
SW	SWITCH
SWBD	SWITCHBOARD
SWGR	SWITCHGEAR
TC	TIME CLOCK
TEL	TELEPHONE
TP	TWISTED PAIR
TPS	TWISTED PAIR SHIELDED
TTB	TELEPHONE TERMINAL BOARD
TV	TELEVISION
TYP	TYPICAL
TR	TAMPER RESISTANT, UL LISTED
UFD	UNDERFLOOR DUCT
UGND	UNDERGROUND
UL	UNDERWRITERS LABORATORY
UOI	UNLESS OTHERWISE INDICATED
UPS	UNINTERRUPTIBLE POWER SUPPLY
UTIL	UTILITY
V	VOLT
VA	VOLT AMPERE
VAR	VOLT AMPERE REACTIVE
VFD	VARIABLE FREQUENCY DRIVE
VOLT	VOLTAGE
W	WATT
WH	WATER HEATER
WP	WEATHERPROOF
XFER	TRANSFER
XFMR	TRANSFORMER

FULLY SPRINKLERED

Revisions: Date:

CONSULTANTS:

Allen&Hoshall
engineering since 1915
1661 International Drive Memphis, TN 38120
901 820 0820 fax 901 683 1001
www.allenhoshall.com

SEAL:

ROBERT HERD REGISTERED ENGINEER No. 022646 STATE OF TENNESSEE

ARCHITECT/ENGINEERS:

brg3s architects
11 W. Huling Avenue
Memphis, Tennessee 38103
t 901.260.9600
f 301.531.8042
w brg3s.com

DRAWING TITLE: SYMBOLS, NOTES, & ABBREVIATIONS
SCALE: NONE
APPROVED PROJECT DIRECTOR:

PROJECT TITLE: VA BUILDING 1A ENTRANCE EXPANSION
LOCATION: VAMC, Memphis, Tennessee
DATE: January 27, 2014 | CHECKED: RTH | DRAWN: FJW

PROJECT NUMBER: 61660
BUILDING NUMBER: 1A
DRAWING NUMBER: E001
DWG. OF

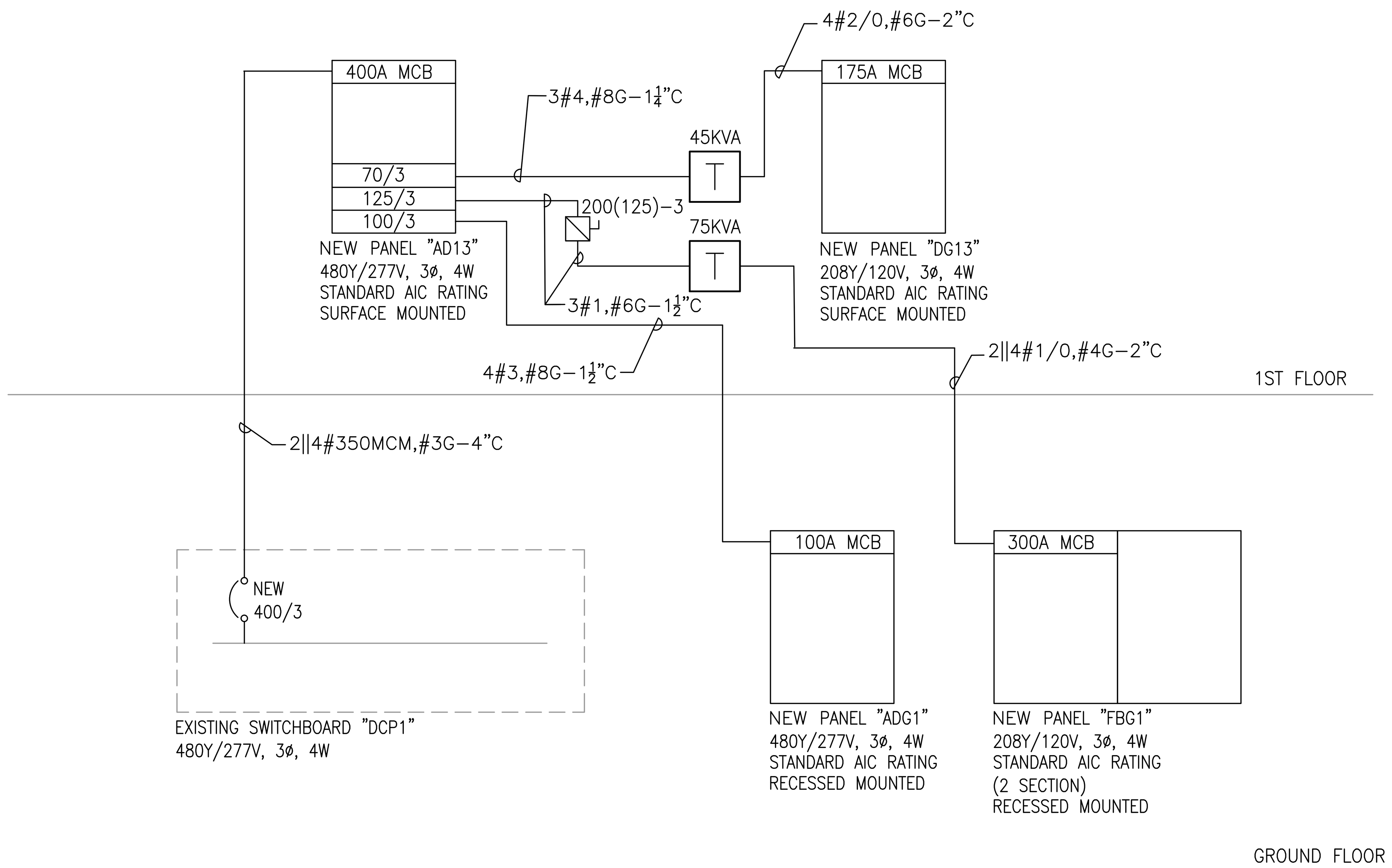

1 SINGLE LINE DIAGRAM - ELECTRICAL

FIXTURE MOUNTING: R–RECESSED, S–SURFACE, SR–SEMI RECESSED, W–WALL, CH–CHAIN, P–PENDANT

FIXTURE TYPE: F–FLUORESCENT, I–INCANDESCENT, LED – LIGHT EMITTING DIODE, MH – METAL HALIDE

LENS: A–ACRYLIC, A12–ACRYLIC #12 PATTERN .125 THICK, G– GLASS, PC– POLYCARBONATE

FINISH: WH–WHITE, MS–MANUFACTURER'S STANDARD, PR–PEWTER, SBA – SELECTED BY ARCHITECT, BA–BRUSHED ALUMINUM, NI–SATIN NICKEL, BZ–BRONZE

TYPE NO.	MANUF'R	CATALOG NO.	FIX. MTG.	FIX. TYPE	LENS	FIN.	LAMP NO.	LAMP WATTS	LAMP TEMP.	MIN. CRI	VOLTS	COMMENTS
A	COLUMBIA	LTRE24–50ML–G–RFA–EU	R	LED	–	MS	–	47	5000	82	120/277	VOLUMETRIC 2X4 TROFFER
	COLUMBIA	TRE24–242–G–RFA–EU–LPT850	R	F	–	MS	2	32	5000	82	120/277	ALTERNATE FIXTURE
B	PRESCOLITE	LF6LED–6LFLED7–40KPW	R	LED	–	PR	–	33	4100	85	277	LED DOWNLIGHT
	PRESCOLITE	LF6CFH142EB–6CFH1PW	R	F	–	PR	1	42	5000	85	277	ALTERNATE FIXTURE
B1	PRESCOLITE	LF6SQLEDG4–6SQLED7G4–40K–PW–WW	R	LED	–	PR	–	41	4100	85	277	LED DOWNLIGHT – WALL WASH
	PRESCOLITE	LF6SQCFH132EB–6SQCFH1PWWW	R	F	–	PR	1	32	5000	85	277	ALTERNATE FIXTURE
B2	PRESCOLITE	LF6LED–6LFLED5–40KPW	R	LED	–	PR	–	16	4100	85	277	LED DOWNLIGHT
	PRESCOLITE	LF6CFH132EB–6CFH1PW	R	F	–	PR	1	32	5000	85	277	ALTERNATE FIXTURE
C	PRESCOLITE	LF6LED–6LFLED740K	R	LED	–	MS	–	38	4100	85	277	LED DOWNLIGHT – DAMP LOCATION
	PRESCOLITE	LF6CFH132EB–6CFH1	R	F	–	MS	2	26	5000	85	277	ALTERNATE FIXTURE
C1	PRESCOLITE	MD8LED6L50K8–8MD6LWFL45SL–CL	R	LED	G	MS	–	84	5000	85	120/277	HIGH LUMEN LED DOWNLIGHT – WET LOCATION
	PRESCOLITE	LF8MH100EB–277V8MHV–CL	R	MH	G	MS	1	100	5000	85	120/277	ALTERNATE FIXTURE
E1	DUAL–LITE	SESRBN	S	LED	–	BA	–	5	–	–	120/277	EXIT, SINGLE FACE, UNIVERSAL MOUNT
E2	DUAL–LITE	SEDRBN	S	LED	–	BA	–	5	–	–	120/277	EXIT, DOUBLE FACE, UNIVERSAL MOUNT
E3	DUAL–LITE	PGN–W	S	LED	–	P	–	17	–	–	277	EMERGENCY EGRESS FIXTURE
F	COLUMBIA	CS4–232–EU	P	F	–	MS	2	32	5000	80	120/277	SUSPENDED FLUORESCENT STRIP
F1	COLUMBIA	LXEM–4–50–ML–RFA–E–U	S	F	–	MS	2	32	5000	80	120/277	FLUORESCENT STRIP – WET LOCATION
G	KIM LIGHITNG	EL700–12L–3KUV–F–DB/AGS74DB	S	LED	–	BZ	1	22	3500	80	277	OUTSIDE UPLIGHT
G2	KIM LIGHITNG	EL700–9L–3KUV–F–DB/AGS73DB	S	LED	–	BZ	1	14	3500	80	277	OUTSIDE UPLIGHT
G3	KIM LIGHITNG	EL700–9L–3KUV–S–DB/AGS73DB	S	LED	–	BZ	1	14	3500	80	277	OUTSIDE UPLIGHT
H	SECURE USA	FX–M30–D/BX910LED–8FX–36	S	LED	–	MS	1	7	3500	80	277	LIGHTED BOLLARD – PROVIDE WITH 12V DRIVER FOR LED LIGHT SOURCE
M1	FOCAL POINT	FMN–SR17–FC22–277S–WH	SR	F	G	WH	1	22	4100	80	277	SCONCE
M2	FOCAL POINT	FMN–SR22–FC55–277S–WH	SR	F	G	WH	1	55	4100	80	277	SCONCE
N	PINNACLE	L6A35–40–4–AC48G1–UNV–1C–W	P	LED	–	MS	2	–	4100	–	120/277	LED LINEAR PENDANT
	PINNACLE	L6A–2T5–4–AC48G1–UNV–1C–W	P	F	–	MS	2	–	4100	–	120/277	ALTERNATE FIXTURE
P	FRAQTIR	S305–R00K–S–00–2–00–0–40–00	S	LED	–	MS	–	12	4100	84	120/277	LED COVE LIGHT – PROVIDE CUSTOM FIXTURE LENGTHS PER ARCHITECTURAL REFLECTED CEILING PLANS. FIXTURE TO BE ROUGHED IN WITH CEILING AND INSTALLED PER MANUFACTURER'S RECOMMENDATIONS. PROVIDE ALL PARTS AND ACCESSORIES, ETC. FOR A COMPLETE SYSTEM. VERIFY ROUGH IN DIMENSIONS PRIOR TO ORDERING.
Q	BEACON	CDT–24NB–55–5K–2X2–UNV–YK–FV–BBT	S	LED	–	MS	–	12	4100	84	120/277	ARCHITECTURAL FLOODLIGHT

ALL FLUORESCENT BALLASTS SHALL BE ELECTRONIC 10%≤ THD, UOI.

SEISMIC MOUNTING NOTES: SEE E003. EACH PENDANT FIXTURE SHALL HAVE ONE ZINC COATED, HIGH STRENGTH, STEEL ROPE CABLE WITH CONNECTIONS. DESIGNED FOR CABLE SERVICE RUN BETWEEN FIXTURE AND STRUCTURE ABOVE. EACH RECESSED TROFFER SHALL HAVE INDIVIDUAL TIE STRINGERS AND BOLTED CONNECTION TO THE GRID OR FLANGE.

ALL "EQUAL" ALTERNATE MANUFACTURERS ARE SUBJECT TO APPROVAL BY ENGINEER, 10 DAYS PRIOR TO BID. PROVIDE INTERIOR/EXTERIOR BUILDING PHOTOMETRIC LAYOUT WITH "EQUAL" ALTERNATE FIXTURES.

2 FIXTURE SCHEDULE - ELECTRICAL

PANELBOARD FBG1 (2 SECTION) SCHEDULE

300A MAIN CIRCUIT BREAKER — 208Y/120V, 3PH, 4W

LOAD SERVED	LOAD (VA) A	LOAD (VA) B	LOAD (VA) C	BKR. SIZE	CKT. NO.	CKT. NO.	BKR. SIZE	LOAD (VA) A	LOAD (VA) B	LOAD (VA) C	LOAD SERVED
REVOLVING DOOR	1000			20	1	2	20	900			RECEPTACLES
-		1000		-	3	4	20		900		RECEPTACLES
SPARE				20	5	6	20			720	RECEPTACLES
SLIDING DOOR	700			20	7	8	20	900			RECEPTACLES
SLIDING DOOR		1400		20	9	10	20		900		RECEPTACLES
SLIDING DOOR			1400	20	11	12	20			900	RECEPTACLES
SLIDING DOOR	1400			20	13	14	20	900			RECEPTACLES
SLIDING DOOR		1400		20	15	16	20		900		RECEPTACLES
SLIDING DOOR			1400	20	17	18	20			1080	RECEPTACLES
SPARE				20	19	20	20	900			RECEPTACLES
ICE MAKER		1000		20	21	22	20		900		RECEPTACLES
MICROWAVE			1000	20	23	24	20				SPARE
SUMP PUMP REC.	1200			20	25	26	20	1080			RECEPTACLES
RECEPTACLES		900		20	27	28	20		720		RECEPTACLES
RECEPTACLES			900	20	29	30	20			1260	RECEPTACLES
RECEPTACLES	1080			20	31	32	20	1080			RECEPTACLES
RECEPTACLES		900		20	33	34	20		1080		RECEPTACLES
RECEPTACLES			1260	20	35	36	20			900	RECEPTACLES
RECEPTACLES	900			20	37	38	20	900			RECEPTACLES
RECEPTACLES		900		20	39	40	20		720		RECEPTACLES
REFRIDGERATOR			1000	20	41	42	20			720	RECEPTACLES
COFFEE MAKER	1000			20	43	44	20	1200			VAV BOXES
COFFEE MAKER		1000		20	45	46	20		1200		VAV BOXES
COFFEE MAKER			1000	20	47	48	20			1200	VAV BOXES
COFFEE MAKER	1000			20	49	50	20				SPARE
COFFEE MAKER		1000		20	51	52	20				SPARE
COFFEE MAKER			1000	20	53	54	20				SPARE
					55	56	20				SPARE
					57	58	20				SPARE
					59	60	20				SPARE
					61	62	20				SPARE
					63	64					
					65	66					
					67	68					
					69	70					
					71	72					
					73	74					
					75	76					
					77	78					
					79	80					
					81	82					
					83	84					
SUBTOTAL	8280	9500	8960					7860	7320	6780	

TOTALS — PHASE A: 16140 — PHASE B: 16820 — PHASE C: 15740 — TOTAL: 48700 VA — TOTAL AMPS: 162.41

PANELBOARD DG13 SCHEDULE

175A MAIN CIRCUIT BREAKER — 208Y/120V, 3PH, 4W

LOAD SERVED	LOAD (VA) A	LOAD (VA) B	LOAD (VA) C	BKR. SIZE	CKT. NO.	CKT. NO.	BKR. SIZE	LOAD (VA) A	LOAD (VA) B	LOAD (VA) C	LOAD SERVED
1A-HWUH1	100			15	1	2	20	900			RECEPTACLES
1A-AHU4		250		20	3	4	20		900		RECEPTACLES
1A-AHU5			250	20	5	6	20			900	RECEPTACLES
SPARE				20	7	8	20	900			RECEPTACLES
SPARE				20	9	10	20		1080		RECEPTACLES
SLIDING DOOR			700	20	11	12	20			900	RECEPTACLES
SLIDING DOOR	700			20	13	14	20	900			RECEPTACLES
SLIDING DOOR		700		20	15	16	20		900		RECEPTACLES
RECEPTACLES			1080	20	17	18	20			720	RECEPTACLES
COPIER	1000			20	19	20	20	900			RECEPTACLES
RECEPTACLES		540		20	21	22	20		900		RECEPTACLES
SPARE				20	23	24	20			900	RECEPTACLES
SPARE				20	25	26	20	1440			RECEPTACLES
SPARE				20	27	28	20		1080		RECEPTACLES
MICROWAVE			1000	20	29	30	20			1000	RECEPTACLES
RECEPTACLES	720				31	32	20	1440			RECEPTACLES
SPRKLR ALARM		1200		20	33	34	20		1080		RECEPTACLES
					35	36	20			900	RECEPTACLES
					37	38	20	900			RECEPTACLES
					39	40	20		1080		RECEPTACLES
					41	42	20			720	RECEPTACLES

TOTALS — PHASE A: 9900 — PHASE B: 9710 — PHASE C: 9070 — TOTAL: 28680 VA — TOTAL AMPS: 95.64

PANELBOARD ADG1 SCHEDULE

100A MAIN CIRCUIT BREAKER — 480Y/277V, 3PH, 4W

LOAD SERVED	LOAD (VA) A	LOAD (VA) B	LOAD (VA) C	BKR. SIZE	CKT. NO.	CKT. NO.	BKR. SIZE	LOAD (VA) A	LOAD (VA) B	LOAD (VA) C	LOAD SERVED
LIGHTS	680			20	1	2	15/3	390			AIR CURTAIN
LIGHTS		517		20	3	4	-		390		-
LIGHTS			487	20	5	6	-			390	-
LIGHTS	643			20	7	8	20	780			LIGHTS
LIGHTS		675		20	9	10	20		330		LIGHTS
LIGHTS			658	20	11	12	20				SPARE
LIGHTS	470			20	13	14	20				SPARE
LIGHTS		1216		20	15	16	20				SPARE
LIGHTS			658	20	17	18	20				SPARE
LIGHTS	1576			20	19	20	20				SPARE
LIGHTS		896		20	21	22	20				SPARE
LIGHTS			960	20	23	24	20				SPARE
LIGHTS	480			20	25	26	20				SPARE
					27	28	20				SPARE
					29	30	20				SPARE
					31	32					
					33	34					
					35	36					
					37	38					
					39	40					
					41	42					

TOTALS — PHASE A: 5019 — PHASE B: 4024 — PHASE C: 3153 — TOTAL: 12196 VA — TOTAL AMPS: 17.62

PANELBOARD AD13 SCHEDULE

400A MAIN CIRCUIT BREAKER — 480Y/277V, 3PH, 4W

LOAD SERVED	LOAD (VA) A	LOAD (VA) B	LOAD (VA) C	BKR. SIZE	CKT. NO.	CKT. NO.	BKR. SIZE	LOAD (VA) A	LOAD (VA) B	LOAD (VA) C	LOAD SERVED
LIGHTS	1600			20	1	2	60/3	7500			1A-AHU4
LIGHTS		846		20	3	4	-		7500		-
LIGHTS			534	20	5	6	-			7500	-
LIGHTS	705			20	7	8	45/3	5850			1A-AHU4
LIGHTS		564		20	9	10	-		5850		-
LIGHTS			658	20	11	12	-			5850	-
LIGHTS	542			20	13	14	20/3	3050			1A-RF4
LIGHTS		470		20	15	16	-		3050		-
EXT. ROOF LGTS			330	20	17	18	-			3050	-
LIGHTS	500			20	19	20	70/3	9450			1A-AHU5
SPARE				20	21	22	-		9450		-
SPARE				20	23	24	-			9450	-
SPARE				30/3	25	26	100/3	11100			ELEV. (SHUNT-TRIP)
-				-	27	28	-		11100		-
-				-	29	30	-			11100	-
AIR COMPRESS.	936			20/3	31	32	100/3	4539			PANEL "ADG1"
-		936		-	33	34	-		4024		-
-			936	-	35	36	-			3153	-
PANEL "FBG1"	16140			125/3	37	38	70/3	10700			PANEL "DG13"
-		16820		-	39	40	-		10210		-
-			16240	-	41	42	-			9070	-

TOTALS — PHASE A: 72612 — PHASE B: 70820 — PHASE C: 67871 — TOTAL: 211303 VA — TOTAL AMPS: 305.35

3 PANEL SCHEDULES - ELECTRICAL

FULLY SPRINKLERED

Revisions: | Date:

CONSULTANTS:

Allen&Hoshall
engineering since 1915
1661 International Drive Memphis, TN 38120
901 820 0820 fax 901 683 1001
www.allenhoshall.com

SEAL: ROBERT HERD — REGISTERED ENGINEER — No. 022646 — STATE OF TENNESSEE

ARCHITECT/ENGINEERS:

brg3s architects
11 W. Huling Avenue
Memphis, Tennessee 38103
t 901.260.9600
f 301.531.8042
w brg3s.com

DRAWING TITLE: SINGLE LINE DIAGRAM & FIXTURE SCHEDULE
SCALE: NONE
APPROVED PROJECT DIRECTOR:

PROJECT TITLE: VA BUILDING 1A ENTRANCE EXPANSION
LOCATION: VAMC, Memphis, Tennessee
DATE: January 27, 2014 — CHECKED: RTH — DRAWN: FJW

PROJECT NUMBER: 61660
BUILDING NUMBER: 1A
DRAWING NUMBER: E002
DWG. OF

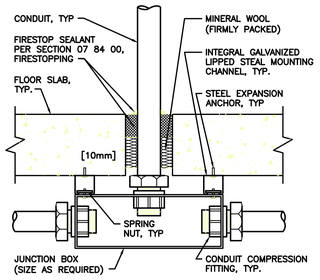

1 FLOOR SLAB PENETRATION DETAIL

NTS

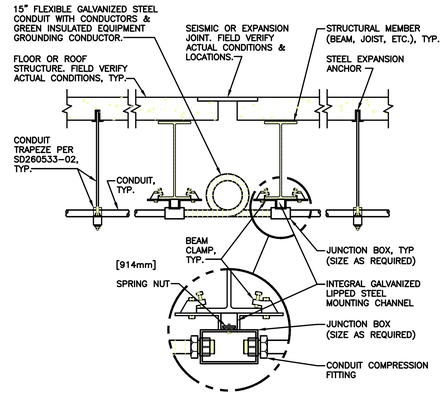

2 CONDUIT JOINT CROSSING DETAIL

NTS

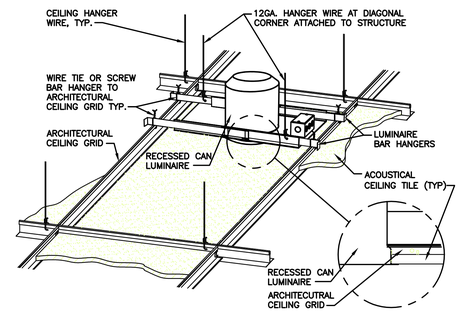

3 DOWNLIGHT MOUNTING - LAY-IN CEILING

NTS

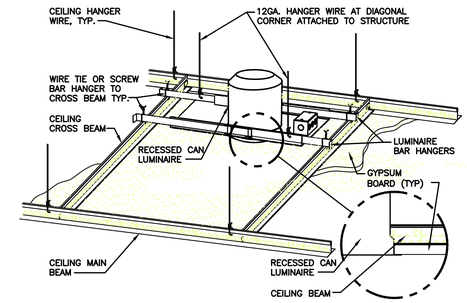

4 DOWNLIGHT MOUNTING - GYPBOARD CEILING

NTS

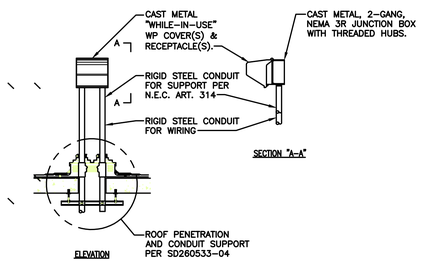

5 RECEPTACLE ROOF MOUNTING DETAIL

NTS

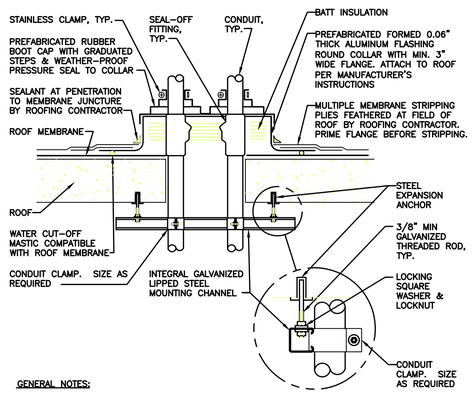

GENERAL NOTES:

1. MAINTAIN A MINIMUM CLEARANCE OF 12" [308mm] ON ALL SIDES OF ROOF PENETRATION FROM WALLS, CURBS, AND OTHER PROJECTIONS TO FACILITATE PROPER FLASHING.
2. FLANGES OF ADJACENT FLASHINGS SHALL NOT BE CUT OR OVERLAPPED.
3. VERIFY ROOF & STRUCTURAL SYSTEM WITH ARCHITECT.
4. COORDINATE FLASHING INSTALLATION WITH ROOFING CONTRACTOR TO ENSURE PROPER METHODS & MATERIALS ARE USED TO MAINTAIN ROOF WARRANTY.

6 ROOF PENETRATION DETAIL

NTS

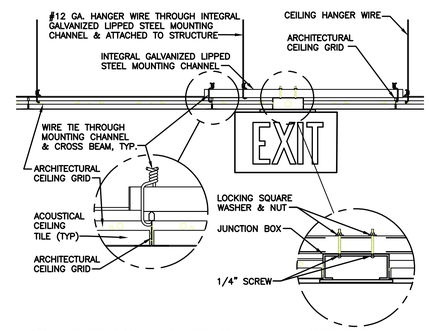

7 EXIT SIGN MOUNTING - LAY-IN CEILING

NTS

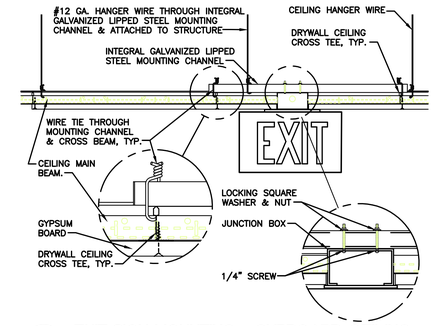

8 EXIT SIGN MOUNTING - GYPBOARD CEILING

NTS

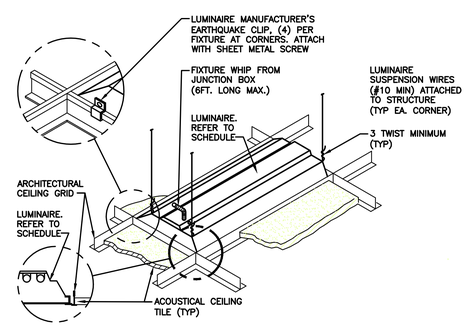

9 LUMINAIRE MOUNTING - LAY-IN CEILING

NTS

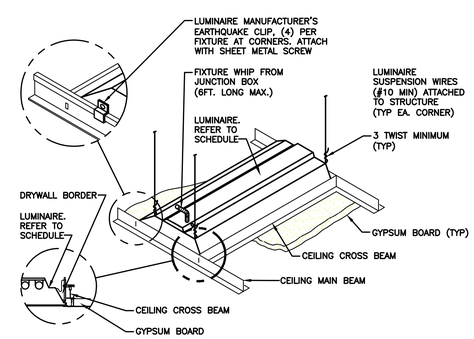

10 LUMINAIRE MOUNTING - GYPBOARD CEILING

NTS

FULLY SPRINKLERED

Revisions:	Date:

CONSULTANTS:

Allen&Hoshall
engineering since 1915
1661 International Drive Memphis, TN 38120
901 820 0820 fax 901 683 1001
www.allenhoshall.com

SEAL:

ROBERT HERO REGISTERED ENGINEER No. 022646 STATE OF TENNESSEE

ARCHITECT/ENGINEERS:

brg3s architects
11 W. Huling Avenue
Memphis, Tennessee 38103
t 901.260.9600
f 301.531.8042
w brg3s.com

DRAWING TITLE: DETAILS
SCALE: NONE
APPROVED PROJECT DIRECTOR:

PROJECT TITLE: VA BUILDING 1A ENTRANCE EXPANSION
LOCATION: VAMC, Memphis, Tennessee
DATE: January 27, 2014 | CHECKED: RTH | DRAWN: FJW

PROJECT NUMBER: 61660
BUILDING NUMBER: 1A
DRAWING NUMBER: E003
DWG. OF

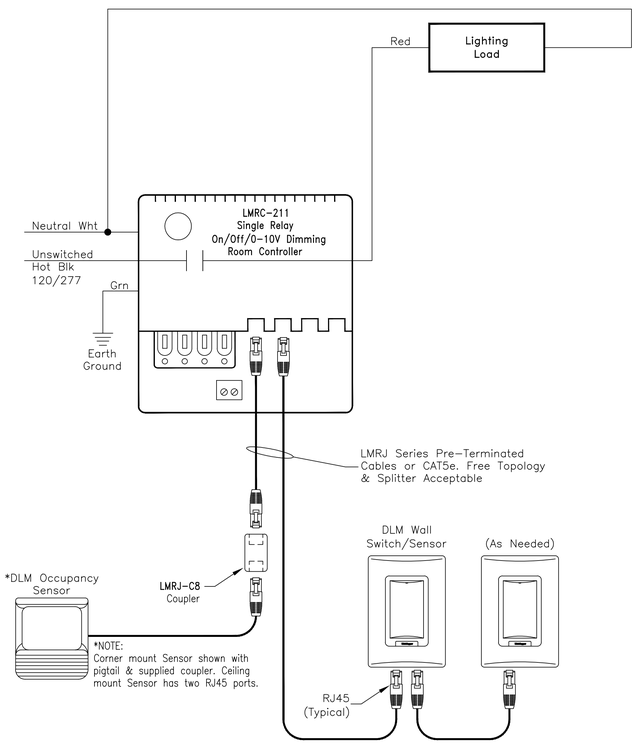

DEVICES ARE PRESET FOR PLUG n' GO™ OPERATION,
ADJUSTMENT IS OPTIONAL.
Sequence of Operation: In this configuration the LMRC-211 defaults to manual-on/automatic-off operation. Enhanced room controllers support up to 64 loads and 48 devices per DLM local network. For full operational details, adjustments and more features of the product, see the DLM System Installation Guide at www.wattstopper.com

LMRC-211 Single Relay
Wiring Diagram

1 DIMMING WIRING DIAGRAM

NTS

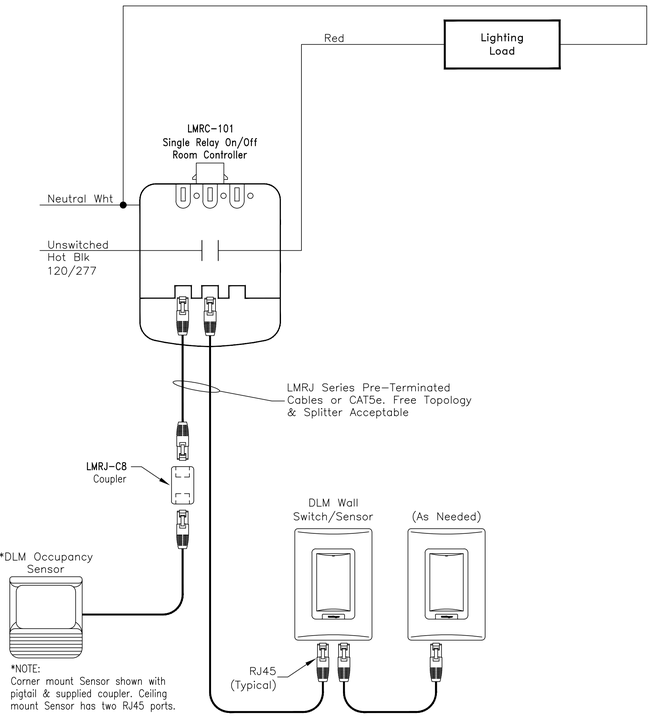

DEVICES ARE PRESET FOR PLUG n' GO™ OPERATION,
ADJUSTMENT IS OPTIONAL.
Sequence of Operation: In this configuration The LMRC-101 defaults to manual-on/automatic off. Maximum of 4 room controllers, controlling up to 8 loads and up to 24 communicating devices per DLM local network. For full operational details, adjustments and more features of the product, see the DLM System Installation Guide at www.wattstopper.com

LMRC-101
Single Relay Wiring Diagram

2 OCCUPANCY SENSOR WIRING DIAGRAM

NTS

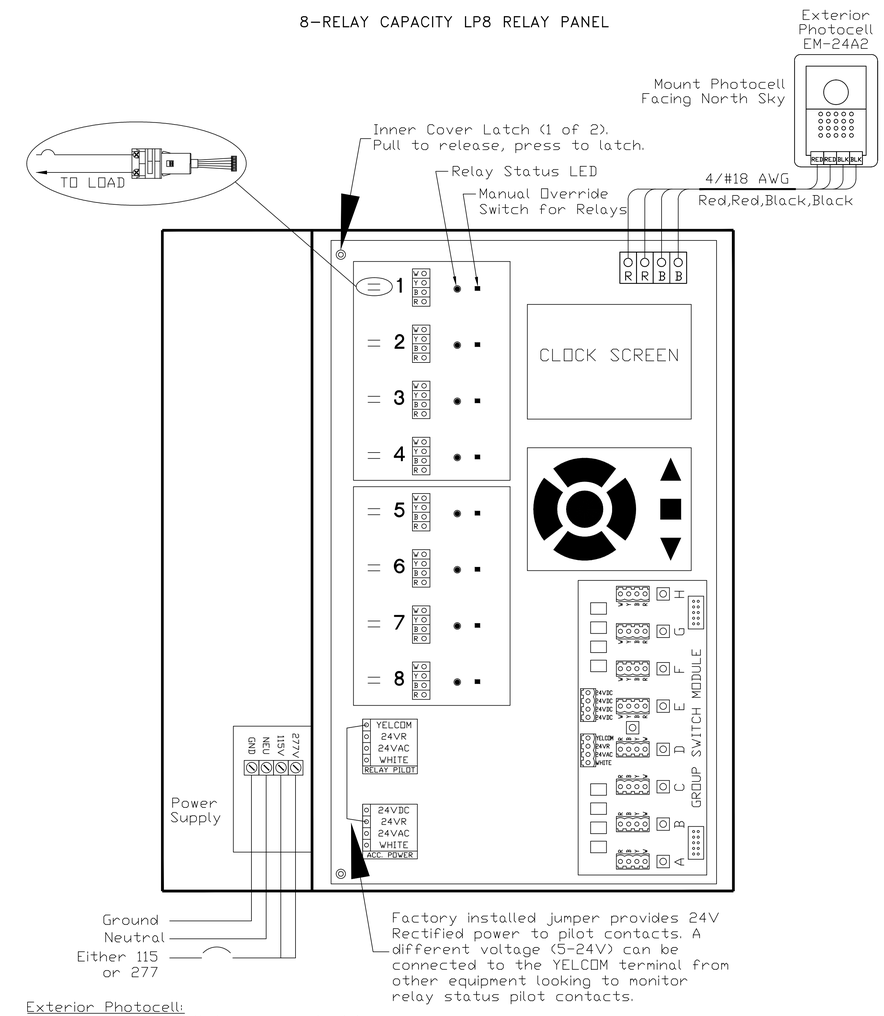

Exterior Photocell:
When dark, photocell turns on relay(s) assigned to channels utilizing exterior lighting scenarios. When light, relay turns off.

Power Output:
LP Relay Panels have 800mA @ 24VDC/VAC/VR available to power devices. Maximum number of devices depends on power consumption of models used.

LP Relay Panel
Interior Layout/Power Connections

1 'LCP-1' TYPICAL WIRING DIAGRAM

NTS

FULLY SPRINKLERED

Revisions:	Date:

CONSULTANTS:

Allen&Hoshall
engineering since 1915
1661 International Drive Memphis, TN 38120
901 820 0820 fax 901 683 1001
www.allenhoshall.com

SEAL:

ROBERT HEAD REGISTERED ENGINEER NO. 022616 STATE OF TENNESSEE

ARCHITECT/ENGINEERS:

brg3s architects
11 W. Huling Avenue
Memphis, Tennessee 38103
t 901.260.9600
f 301.531.8042
w brg3s.com

DRAWING TITLE: LIGHTING CONTROL WIRING DIAGRAMS
SCALE: NONE

APPROVED PROJECT DIRECTOR:

PROJECT TITLE: VA BUILDING 1A ENTRANCE EXPANSION

LOCATION: VAMC, Memphis, Tennessee

DATE: January 27, 2014 | CHECKED: RTH | DRAWN: FJW

PROJECT NUMBER: 61660

BUILDING NUMBER: 1A

DRAWING NUMBER: E004

DWG. OF

1 GROUND FLOOR DEMOLTION PLAN
SCALE: 1/8" = 1'

GENERAL NOTES:

1. ALL ITEMS SHOWN ON DEMO PLAN ARE EXISTING. CONTRACTOR SHALL REMOVE ONLY THOSE DEVICES AND EQUIPMENT SHOWN TO BE REMOVED INCLUDING ASSOCIATED CIRCUITS, UOI TO REMAIN. CONTRACTOR SHALL CAREFULLY REMOVE INDICATED NURSE CALL, INTERCOM, FIRE ALARM AND SECURITY EQUIPMENT AND STORE IN SAFE LOCATION AS DIRECTED BY OWNER'S REPRESENTATIVE. MAINTAIN CONTINUITY OF ELECTRICAL SERVICE TO ALL EXISTING DEVICES TO REMAIN. PROVIDE CIRCUIT EXTENSIONS AS REQUIRED.

2. ALL INFORMATION SHOWN ON THIS SHEET REPRESENTS EXISTING SITE CONDITIONS AS BEST UNDERSTOOD AT TIME OF SURVEY. CONTRACTOR SHALL VERIFY EXISTING CONDITIONS.

3. DISCONNECT AND DEMO CIRCUITRY FOR ALL MECHANICAL EQUIPMENT INDICATED TO BE REMOVED ON MECHANICAL DEMO SHEETS, UOI.

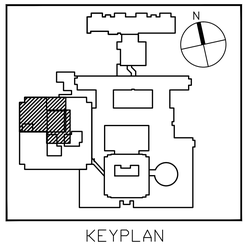

KEYPLAN

NORTH

FULLY SPRINKLERED

Revisions: Date:

CONSULTANTS:

Allen&Hoshall
engineering since 1915
1661 International Drive Memphis, TN 38120
901 820 0820 fax 901 683 1001
www.allenhoshall.com

SEAL:

ROBERT HERD
REGISTERED ENGINEER
No. 022648
STATE OF TENNESSEE

ARCHITECT/ENGINEERS:

brg3s architects
11 W. Huling Avenue
Memphis, Tennessee 38103
t 901.260.9600
f 301.531.8042
w brg3s.com

DRAWING TITLE:
GROUND FLOOR DEMOLITION PLAN - ELECTRICAL
SCALE: 1/8" = 1'

APPROVED PROJECT DIRECTOR:

PROJECT TITLE:
VA BUILDING 1A
ENTRANCE EXPANSION

LOCATION:
VAMC, Memphis, Tennessee

DATE: January 27, 2014
CHECKED: RTH
DRAWN: FJW

PROJECT NUMBER: 61660
BUILDING NUMBER: 1A
DRAWING NUMBER: ED-101
DWG. OF

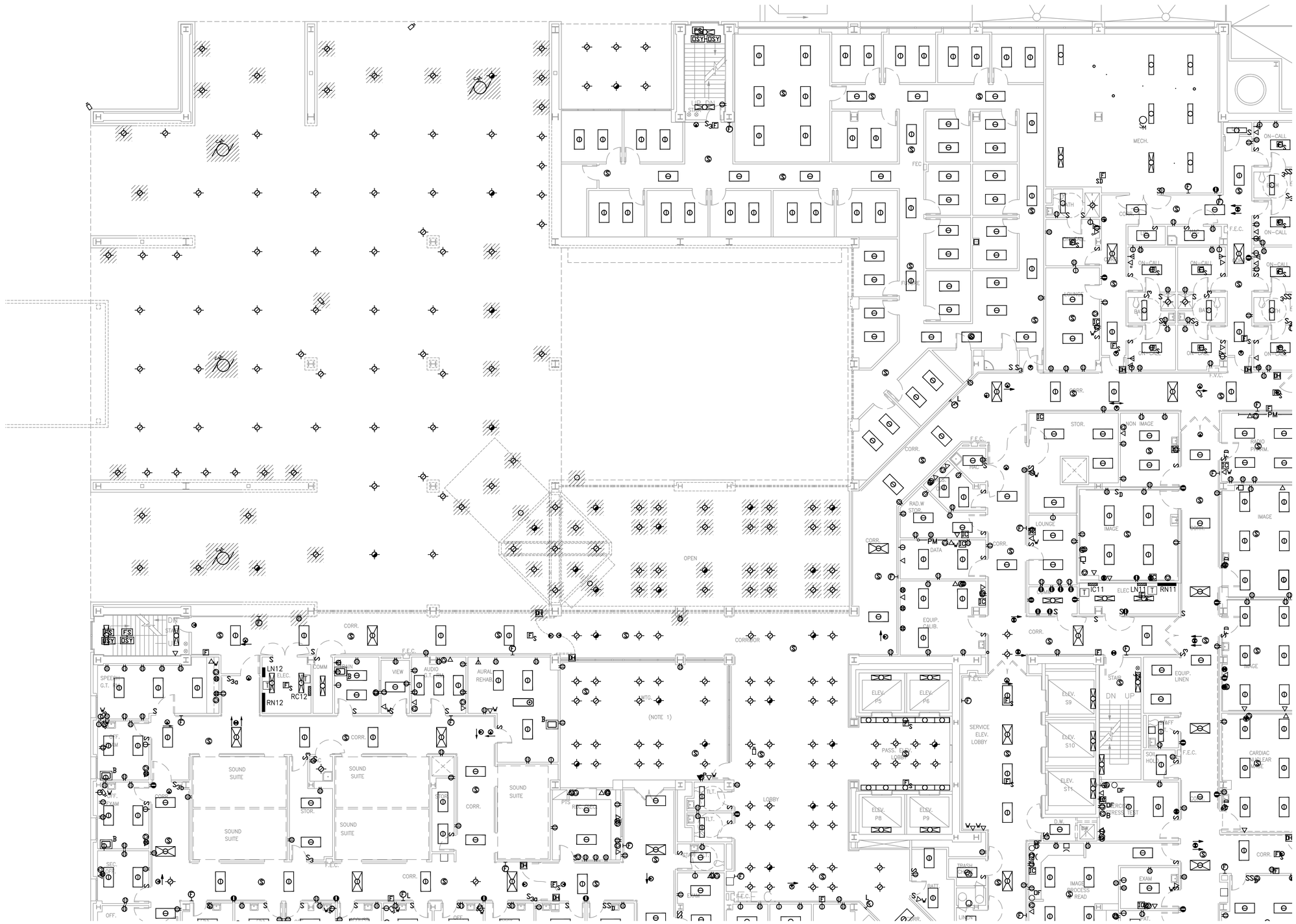

1 1st FLOOR DEMOLTION PLAN
SCALE: 1/8" = 1'

GENERAL NOTES:

1. ALL ITEMS SHOWN ON DEMO PLAN ARE EXISTING. CONTRACTOR SHALL REMOVE ONLY THOSE DEVICES AND EQUIPMENT SHOWN TO BE REMOVED INCLUDING ASSOCIATED CIRCUITS, UOI TO REMAIN. CONTRACTOR SHALL CAREFULLY REMOVE INDICATED NURSE CALL, INTERCOM, FIRE ALARM AND SECURITY EQUIPMENT AND STORE IN SAFE LOCATION AS DIRECTED BY OWNER'S REPRESENTATIVE. MAINTAIN CONTINUITY OF ELECTRICAL SERVICE TO ALL EXISTING DEVICES TO REMAIN. PROVIDE CIRCUIT EXTENSIONS AS REQUIRED.

2. ALL INFORMATION SHOWN ON THIS SHEET REPRESENTS EXISTING SITE CONDITIONS AS BEST UNDERSTOOD AT TIME OF SURVEY. CONTRACTOR SHALL VERIFY EXISTING CONDITIONS.

3. DISCONNECT AND DEMO CIRCUITRY FOR ALL MECHANICAL EQUIPMENT INDICATED TO BE REMOVED ON MECHANICAL DEMO SHEETS, UOI.

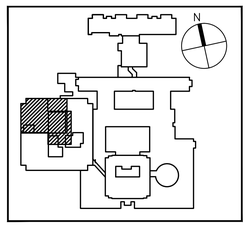

KEYPLAN

NORTH

FULLY SPRINKLERED

Revisions: Date:

CONSULTANTS:

Allen&Hoshall
engineering since 1915
1661 International Drive Memphis, TN 38120
901 820 0820 fax 901 683 1001
www.allenhoshall.com

SEAL:

ROBERT HERD REGISTERED ENGINEER No. 022946 STATE OF TENNESSEE

ARCHITECT/ENGINEERS:

brg3s architects
11 W. Huling Avenue
Memphis, Tennessee 38103
t 901.260.9600
f 301.531.8042
w brg3s.com

DRAWING TITLE: 1st FLOOR DEMOLTION PLAN - ELECTRICAL
SCALE: 1/8" = 1'

APPROVED PROJECT DIRECTOR:

PROJECT TITLE: VA BUILDING 1A ENTRANCE EXPANSION

LOCATION: VAMC, Memphis, Tennessee

DATE: January 27, 2014 | CHECKED: RTH | DRAWN: FJW

PROJECT NUMBER: 61660

BUILDING NUMBER: 1A

DRAWING NUMBER: ED-102

DWG. OF

GENERAL NOTES:

1. COORDINATE ALL FIXTURE LOCATIONS WITH LANDSCAPE DRAWINGS.
2. ALL CIRCUITS SHOWN ARE DIAGRAMMATIC. CONTRACTOR SHALL CIRCUIT TO FIRST AVAILABLE CIRCUIT IN DESIGNATED PANEL.

REFERENCED NOTES:

1. ROUTE CIRCUIT THROUGH LIGHTING CONTROL PANEL ("LCP-1") LOCATED NEXT TO PANEL "FBG1".
2. LIGHTING CONTROL PANEL "LCP-1" - WATTSTOPPER "LP8F-8-115", 8-RELAY, RECESSED MOUNT PANEL OR EQUAL - PROVIDE 120V CONNECTION TO CONTROL PANEL. PROVIDE AND INSTALL "EM-24A2" EXTERIOR PHOTOCELL WITH PANEL.
3. CONTRACTOR SHALL RELOCATE EXISTING LIGHT POLE AND LED FIXTURE HEAD AS INDICATED ON THIS DRAWING. CONTRACTOR SHALL PROVIDE A NEW FOUNDATION FOR POLE. SEE FOUNDATION DETAIL BELOW. CONTRACTOR SHALL RECONNECT TO EXISTING CIRCUITRY, PROVIDING EXTENSIONS OF MATCHING CIRCUITRY AS REQUIRED. COORDINATE WITH CIVIL DEMOLITION DRAWINGS FOR EXACT LOCATION OF POLE MOUNTED FIXTURES TO BE REMOVED.
4. CONTRACTOR SHALL REMOVE EXISTING SIGNAGE IN THIS LOCATION. CONTRACTOR SHALL CONNECT NEW SIGNAGE TO EXISTING CIRCUITRY, PROVIDING EXTENSIONS OF MATCHING CIRCUITRY AS REQUIRED. COORDINATE WITH CIVIL DRAWINGS FOR EXACT LOCATIONS OF SIGNAGE TO BE REMOVED AND SIGNAGE TO BE INSTALLED.
5. PROVIDE CONCRETE FOUNDATION FOR BOLLARD PER MANUFACTUER RECOMMENDATIONS. COORDINATE WITH MANUFACTURER FOR PLACEMENT OF 12V LED DRIVER.

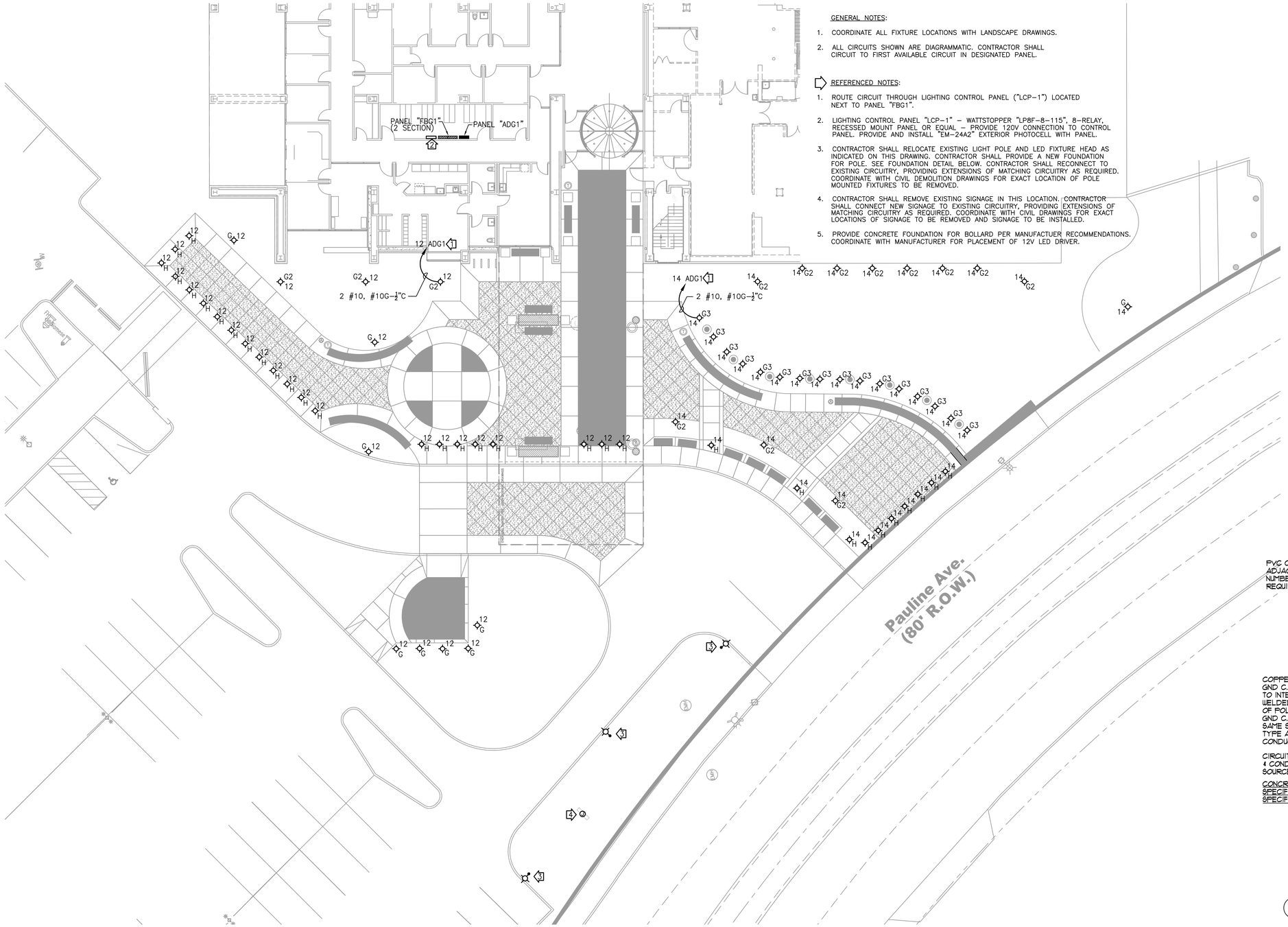

1 SITE PLAN - LIGHTING
SCALE: 3/32" = 1'-0"

NORTH

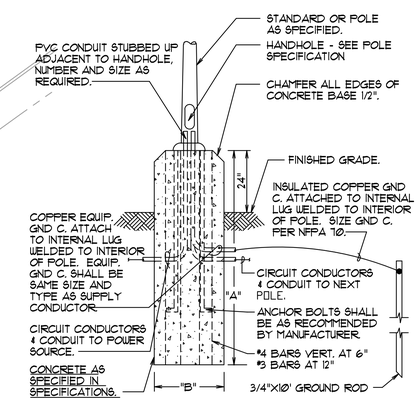

LEGEND
GND C. - GROUNDING CONDUCTOR

POLE HT.	A	B
8' - 20'	36"	24"
21' - 30'	36"	24"
31' - 40'	102"	30"

2 BOLT-DOWN POLE FOUNDATION
SCALE: NONE

FULLY SPRINKLERED

Revisions: Date:

CONSULTANTS:

Allen&Hoshall
engineering since 1915
1661 International Drive Memphis, TN 38120
901 820 0820 fax 901 683 1001
www.allenhoshall.com

SEAL:

ROBERT HERD REGISTERED ENGINEER NO. 027486 STATE OF TENNESSEE

ARCHITECT/ENGINEERS:

brg3s architects
11 W. Huling Avenue
Memphis, Tennessee 38103
t 901.260.9600
f 301.531.8042
w brg3s.com

DRAWING TITLE: SITE PLAN - LIGHTING
SCALE: 1/8" = 1'
APPROVED PROJECT DIRECTOR:

PROJECT TITLE: VA BUILDING 1A ENTRANCE EXPANSION
LOCATION: VAMC, Memphis, Tennessee
DATE: January 27, 2014
CHECKED: RTH
DRAWN: FJW

PROJECT NUMBER: 61660
BUILDING NUMBER: 1A
DRAWING NUMBER: ES-100
DWG. OF

GENERAL NOTES:

1. ALL CIRCUITS SHOWN ARE DIAGRAMMATIC. CONTRACTOR SHALL CIRCUIT TO FIRST AVAILABLE CIRCUIT IN DESIGNATED PANEL.
2. PROVIDE 20/1 BREAKER FOR NEW CIRCUITS TO EXISTING PANELS, UOI.

REFERENCED NOTES:

1. ALL COVE LIGHTING SHALL BE TYPE "P", TYPICAL OF ALL SHOWN.
2. ROUTE THROUGH LIGHTING CONTROL PANEL ("LCP-1") NEXT TO PANEL "FBG1". SEE ALSO ES-100.
3. COORDINATE MOUNTING HEIGHTS AND EXACT LOCATIONS OF ALL TYPE "M1" AND "M2" WALL SCONCES WITH ARCHITECTURAL ELEVATIONS. TYPICAL OF ALL SHOWN.

WALL RATING LEGEND
1-HOUR FIRE
1-HOUR SMOKE

NOTE:
DEDUCTIVE ALTERNATE #4 INCLUDES THE SHORTENING OF THE CANOPY. COORDINATE WITH ARCHITECTURAL PLANS FOR MORE INFORMATION.

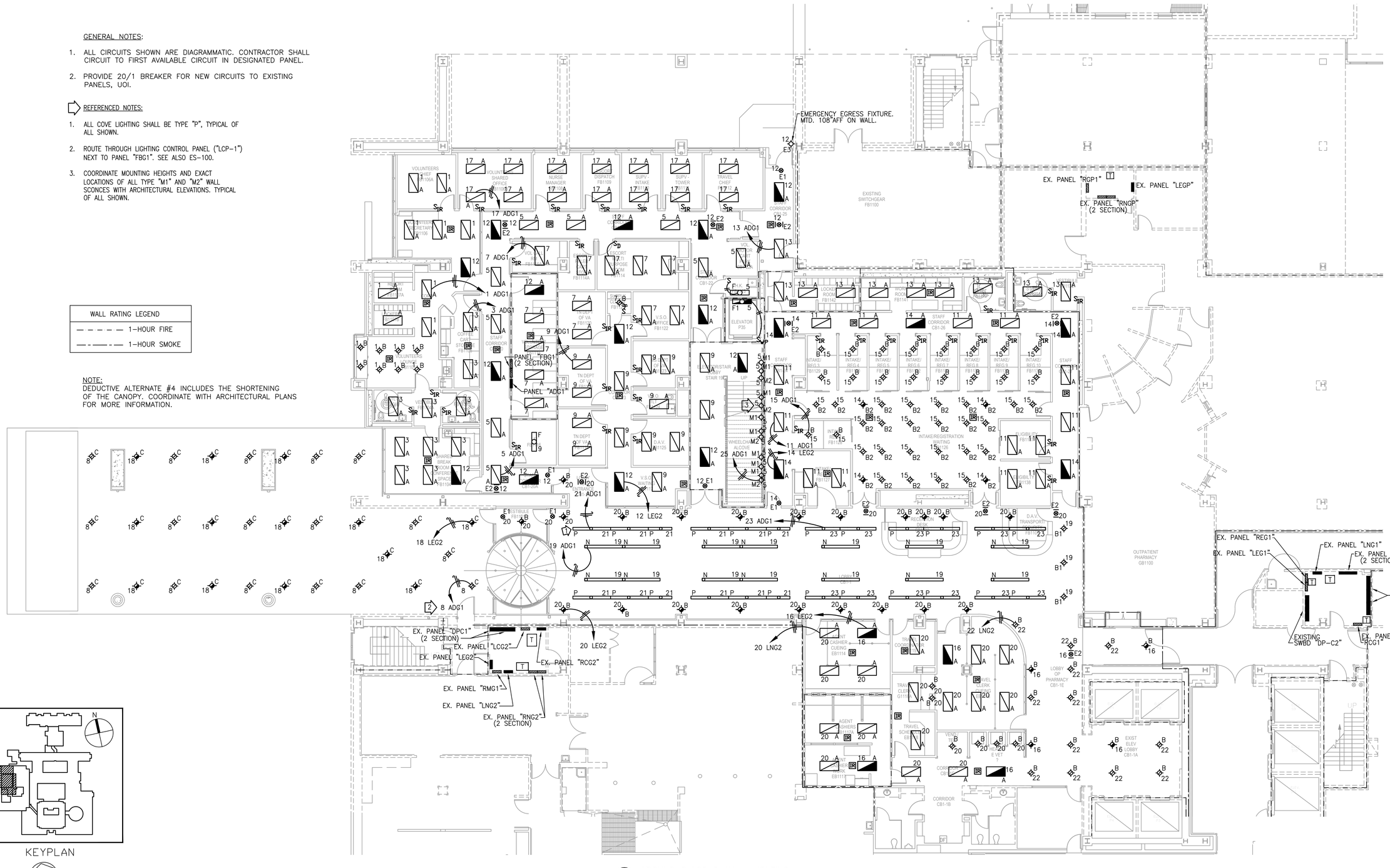

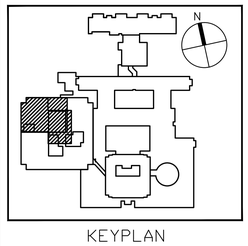

KEYPLAN

NORTH

1 GROUND FLOOR PLAN – LIGHTING
SCALE: 1/8" = 1'

FULLY SPRINKLERED

Revisions:	Date:

CONSULTANTS:

Allen&Hoshall
engineering since 1915
1661 International Drive Memphis, TN 38120
901 820 0820 fax 901 683 1001
www.allenhoshall.com

SEAL:

ROBERT HEAD REGISTERED ENGINEER NO. 092648 STATE OF TENNESSEE

ARCHITECT/ENGINEERS:

brg3s architects
11 W. Huling Avenue
Memphis, Tennessee 38103
t 901.260.9600
f 301.531.8042
w brg3s.com

DRAWING TITLE: GROUND FLOOR PLAN - LIGHTING
SCALE: 1/8" = 1'

APPROVED PROJECT DIRECTOR:

PROJECT TITLE: VA BUILDING 1A ENTRANCE EXPANSION

LOCATION: VAMC, Memphis, Tennessee

DATE: January 27, 2014 | CHECKED: RTH | DRAWN: FJW

PROJECT NUMBER: 61660

BUILDING NUMBER: 1A

DRAWING NUMBER: EL-101

DWG. OF

GENERAL NOTES:

1. ALL CIRCUITS SHOWN ARE DIAGRAMMATIC. CONTRACTOR SHALL CIRCUIT TO FIRST AVAILABLE CIRCUIT IN DESIGNATED PANEL.
2. PROVIDE 20/1 BREAKER FOR ALL NEW CIRCUITS TO EXISTING PANELS, UOI.

REFERENCED NOTES:

1. ROUTE CIRCUIT THROUGH LIGHTING CONTROL PANEL ("LCP-1") NEXT TO PANEL "FBG1" LOCATED ON GROUND FLOOR. SEE ALSO SHEET "ES-100".
2. PROVIDE NEW CERAMIC-BASE FIXTURE MOUNTED 6" ABOVE DOOR HEADER. INSTALL SCREW-TYPE, SELF-BALLASTED, COMPACT FLUORESCENT BULB IN FIXTURE.
3. EXISTING CAN FIXTURES ARE TO REMAIN ON EXISTING CIRCUIT(S). EXISTING SWITCH LEG FOR CAN FIXTURES ARE TO BE DEMOLISHED AND CAN DOWNLIGHT FIXTURES ARE TO BE CONTROLLED FROM A SINGLE-POLE, SNAP SWITCH LOCATED NEXT TO NEW DOOR SHOWN ON PLANS. CONTRACTOR IS TO REMOVE (1) OF THE COMPACT FLUORESCENT BULBS FROM FIXTURES.
4. REMOVE EXISTING FIXTURES FROM EMERGENCY CIRCUIT AND CONNECT FIXTURES TO NORMAL POWER CIRCUIT THAT IS CURRENTLY SERVING AREA. FIXTURES ARE TO BE CONTROLLED BY SNAP-SWITCH SERVING AREA.
5. COORDINATE MOUNTING HEIGHTS AND EXACT LOCATIONS OF ALL TYPE "M1" AND "M2" WALL SCONCES WITH ARCHITECTURAL ELEVATIONS. TYPICAL OF ALL SHOWN.

WALL RATING LEGEND
1-HOUR FIRE
1-HOUR SMOKE

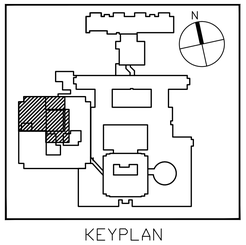

KEYPLAN

NORTH

1 1st FLOOR PLAN - LIGHTING
SCALE: 1/8" = 1'

FULLY SPRINKLERED

Revisions:	Date:

CONSULTANTS:

Allen&Hoshall
engineering since 1915
1661 International Drive Memphis, TN 38120
901 820 0820 fax 901 683 1001
www.allenhoshall.com

SEAL:

ROBERT HERD REGISTERED ENGINEER No. 022618 STATE OF TENNESSEE

ARCHITECT/ENGINEERS:

brg3s architects
11 W. Huling Avenue
Memphis, Tennessee 38103
t 901.260.9600
f 301.531.8042
w brg3s.com

DRAWING TITLE: 1st FLOOR PLAN - LIGHTING
SCALE: 1/8" = 1'

APPROVED PROJECT DIRECTOR:

PROJECT TITLE: VA BUILDING 1A ENTRANCE EXPANSION

LOCATION: VAMC, Memphis, Tennessee

DATE: January 27, 2014 | CHECKED: RTH | DRAWN: FJW

PROJECT NUMBER: 61660

BUILDING NUMBER: 1A

DRAWING NUMBER: EL-102

DWG. OF

GENERAL NOTES:

1. ALL CIRCUITS SHOWN ARE DIAGRAMMATIC. CONTRACTOR SHALL CIRCUIT TO FIRST AVAILABLE CIRCUIT IN DESIGNATED PANEL.

2. PROVIDE 20/1 BREAKER FOR ALL NEW CIRCUITS TO EXISTING PANELS, UOI.

REFERENCED NOTES:

1. ROUTE CIRCUIT THROUGH LIGHTING CONTROL PANEL ("LCP–1") NEXT TO PANEL "FBG1" LOCATED ON GROUND FLOOR. SEE ALSO SHEET "ES–100".

2. EXISTING CAN FIXTURES ARE TO REMAIN ON EXISTING CIRCUIT(S). EXISTING SWITCH LEG FOR CAN FIXTURES ARE TO BE DEMOLISHED AND CAN DOWNLIGHT FIXTURES ARE TO BE CONTROLLED FROM A SINGLE–POLE, SNAP SWITCH LOCATED NEXT TO NEW DOOR SHOWN ON PLANS. CONTRACTOR IS TO REMOVE (1) OF THE COMPACT FLUORESCENT BULBS FROM FIXTURES.

3. REMOVE EXISTING FIXTURES FROM EMERGENCY CIRCUIT AND CONNECT FIXTURES TO NORMAL POWER CIRCUIT THAT IS CURRENTLY SERVING AREA. FIXTURES ARE TO BE CONTROLLED BY SNAP–SWITCH SERVING AREA.

4. COORDINATE MOUNTING HEIGHTS AND EXACT LOCATIONS OF ALL TYPE "M1" AND "M2" WALL SCONCES WITH ARCHITECTURAL ELEVATIONS. TYPICAL OF ALL SHOWN.

WALL RATING LEGEND
1–HOUR FIRE
1–HOUR SMOKE

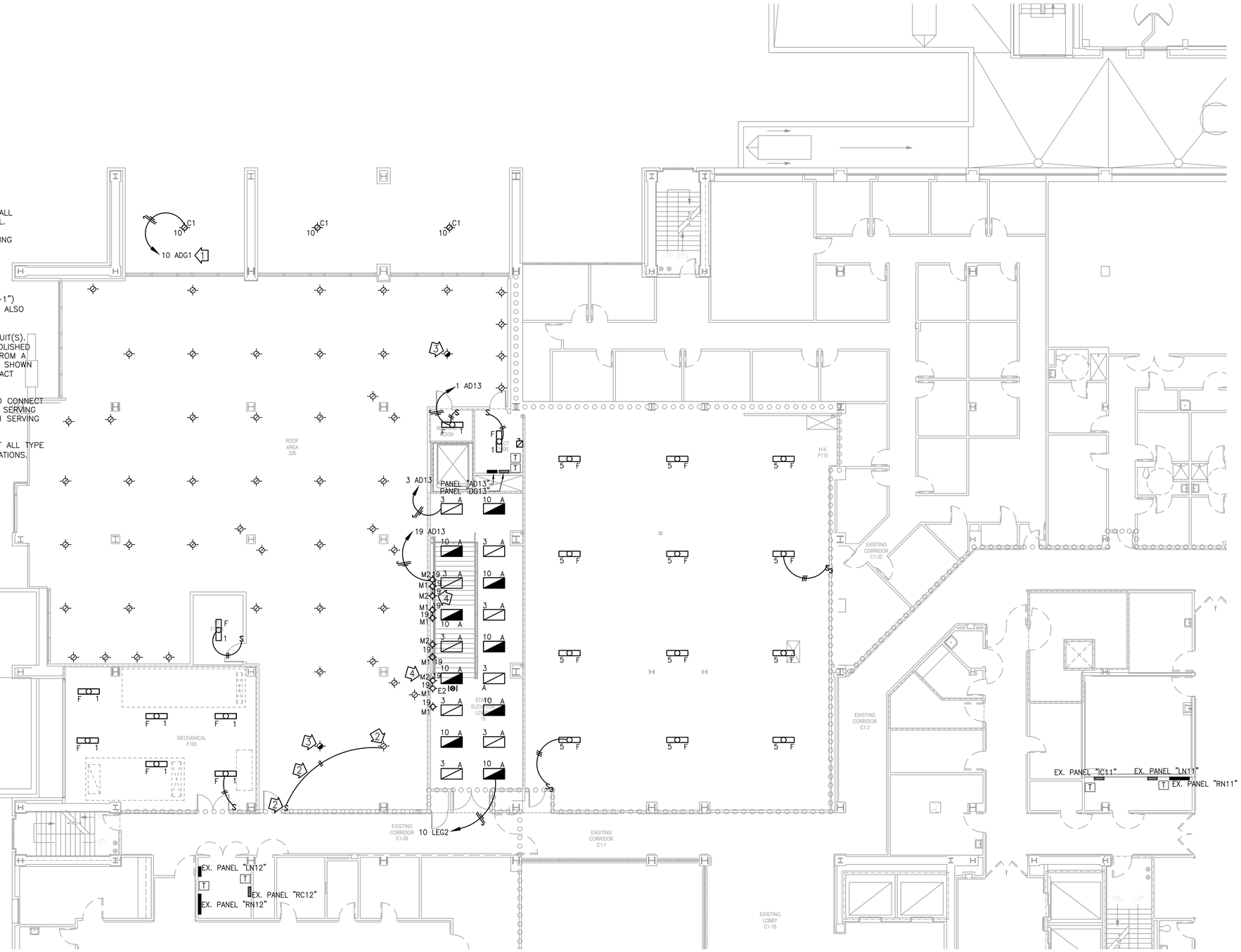

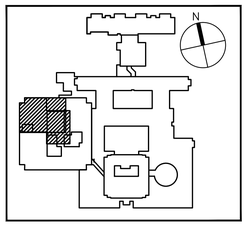

KEYPLAN

NORTH

1 1st FLOOR PLAN – LIGHTING
SCALE: 1/8" = 1'

FULLY SPRINKLERED

Revisions:	Date:

CONSULTANTS:

Allen&Hoshall
engineering since 1915
1661 International Drive Memphis, TN 38120
901 820 0820 fax 901 683 1001
www.allenhoshall.com

SEAL:

ROBERT HERD REGISTERED ENGINEER No. 022066 STATE OF TENNESSEE

ARCHITECT/ENGINEERS:

brg3s architects
11 W. Huling Avenue
Memphis, Tennessee 38103
t 901.260.9600
f 301.531.8042
w brg3s.com

DRAWING TITLE: 1st FLOOR PLAN - LIGHTING - Alternate #3
SCALE: 1/8" = 1'

APPROVED PROJECT DIRECTOR:

PROJECT TITLE: VA BUILDING 1A ENTRANCE EXPANSION

LOCATION: VAMC, Memphis, Tennessee

DATE: January 27, 2014 | CHECKED: RTH | DRAWN: FJW

PROJECT NUMBER: 61660

BUILDING NUMBER: 1A

DRAWING NUMBER: EL-102A3

DWG. OF

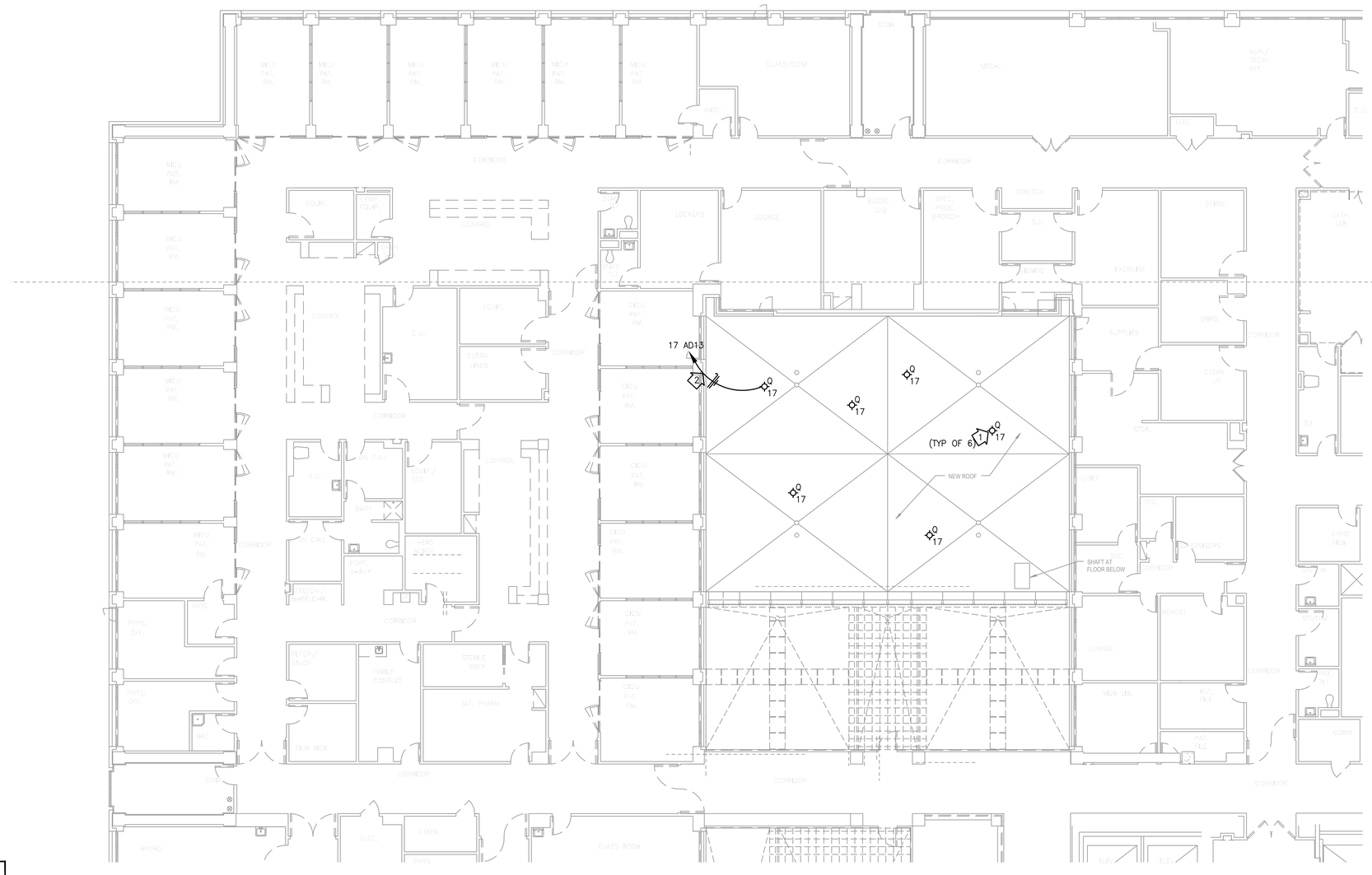

GENERAL NOTES:

1. TYPE "Q" FIXTURE(S) SHOWN ON THIS SHEET SHALL BE MOUNTED ON WEATHERPROOF JUNCTION BOX AND AND SECURED TO THE NEW ROOF AND AIMED UP AT FABRIC STRUCTURE ABOVE. DO NOT AIM FIXTURE INTO WINDOWS AND INTO PAITIENT CARE AREAS ON THE UPPER FLOORS SURROUNDING NEW ROOF. ROUTE CONDUITS FOR FIXTURE IN CEILING SPACE BELOW ROOF.

2. FINAL PLACEMENT OF FIXTURE(S) SHALL BE MOUNTED IN THE BEST POSSIBLE LOCATION FOR LIGHTING THE FABRIC STRUCTURE ABOVE. COORDINATE LOCATION IN FIELD AND WITH ARCHITECTURAL PLANS.

REFERENCE NOTES:

1. DEDUCTIVE ALTERNATE #2 SHOULD INCLUDE THE REMOVAL OF THESE FIXTURES AND ANY RELATED CIRCUITRY, CONDUIT, CONTROLS, ETC. FROM BASE BID.

2. ROUTE CIRCUIT THROUGH LIGHTING CONTROL PANEL ("LCP-1") NEXT TO PANEL "FBG1" LOCATED ON GROUND FLOOR. SEE ALSO SHEET "ES-100".

1 2ND FLOOR PLAN – ROOF LIGHTING
SCALE: 1/8" = 1'

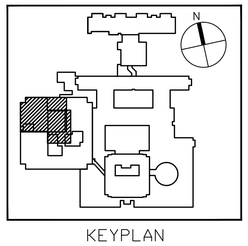

KEYPLAN

NORTH

FULLY SPRINKLERED

Revisions:	Date:

CONSULTANTS:

Allen&Hoshall
engineering since 1915
1661 International Drive Memphis, TN 38120
901 820 0820 fax 901 683 1001
www.allenhoshall.com

SEAL:

ROBERT HEID REGISTERED ENGINEER NO. 022616 STATE OF TENNESSEE

ARCHITECT/ENGINEERS:

brg3s architects
11 W. Huling Avenue
Memphis, Tennessee 38103
t 901.260.9600
f 301.531.8042
w brg3s.com

DRAWING TITLE: 2ND FLOOR PLAN - ROOF LIGHTING
SCALE: 1/8" = 1'

APPROVED PROJECT DIRECTOR:

PROJECT TITLE: VA BUILDING 1A ENTRANCE EXPANSION

LOCATION: VAMC, Memphis, Tennessee

DATE: January 27, 2014 | CHECKED: RTH | DRAWN: FJW

PROJECT NUMBER: 61660

BUILDING NUMBER: 1A

DRAWING NUMBER: EL-103

DWG. OF

GENERAL NOTES:

1. ALL CIRCUITS SHOWN ARE DIAGRAMMATIC. CONTRACTOR SHALL CIRCUIT TO FIRST AVAILABLE CIRCUIT IN DESIGNATED PANEL.
2. COORDINATE HEIGHT OF ALL DEVICES WITH ARCHITECTURAL ELEVATIONS.
3. CIRCUIT HOMERUNS SHARING THE SAME CONDUIT CANNOT SHARE THE SAME NEUTRAL. A SEPARATE NEUTRAL MUST BE PROVIDED FOR EACH HOMERUN.
4. PROVIDE 20/1 BREAKER FOR NEW CIRCUITS TO EXISTING PANELS, UOI.

REFERENCE NOTES:

1. SPEAKER/MICROPHONE COMBINATION MTD. IN WINDOW. COORDINATE EXACT POWER REQUIREMENTS WITH WINDOW MANUFACTURER.
2. AIR CURTAIN – PROVIDE ELECTRICAL CONNECTION TO AIR CURTAIN AS INDICATED. ELECTRICAL CONTRACTOR SHALL PROVIDE AND INSTALL A DOOR SWITCH AT THIS LOCATION WITH WHICH TO INTERLOCK THE AIR CURTAIN. COORDINATE EXACT LOCATION AND REQUIREMENTS WITH MECHANICAL CONTRACTOR.
3. CONTRACTOR SHALL PROVIDE 120V CONNECTION TO VAV BOXES AS REQUIRED. CONTRACTOR SHALL USE CIRCUITS 44, 46, AND 48 IN PANEL "FBG1" TO FEED VAV BOXES SERVING THIS FLOOR. PROVIDE A 20A CIRCUIT BREAKER FOR EACH CIRCUIT. COORDINATE WITH MECHANICAL CONTRACTOR FOR EXACT LOCATION OF VAV BOXES.
4. AUTOMATIC COILING DOOR – PROVIDE 120V CONNECTION TO AUTOMATIC COILING DOOR. CONTRACTOR SHALL COORDINATE WITH FIRE ALARM DRAWINGS.
5. ELECTRICAL CONNECTION FOR AUTOMATIC DOOR. ROUTE CONTROL WIRING OVER TO PUSHPLATE LOCATED IN ROOM. SEE COMMUNICATION PLANS.

WALL RATING LEGEND
1-HOUR FIRE
1-HOUR SMOKE

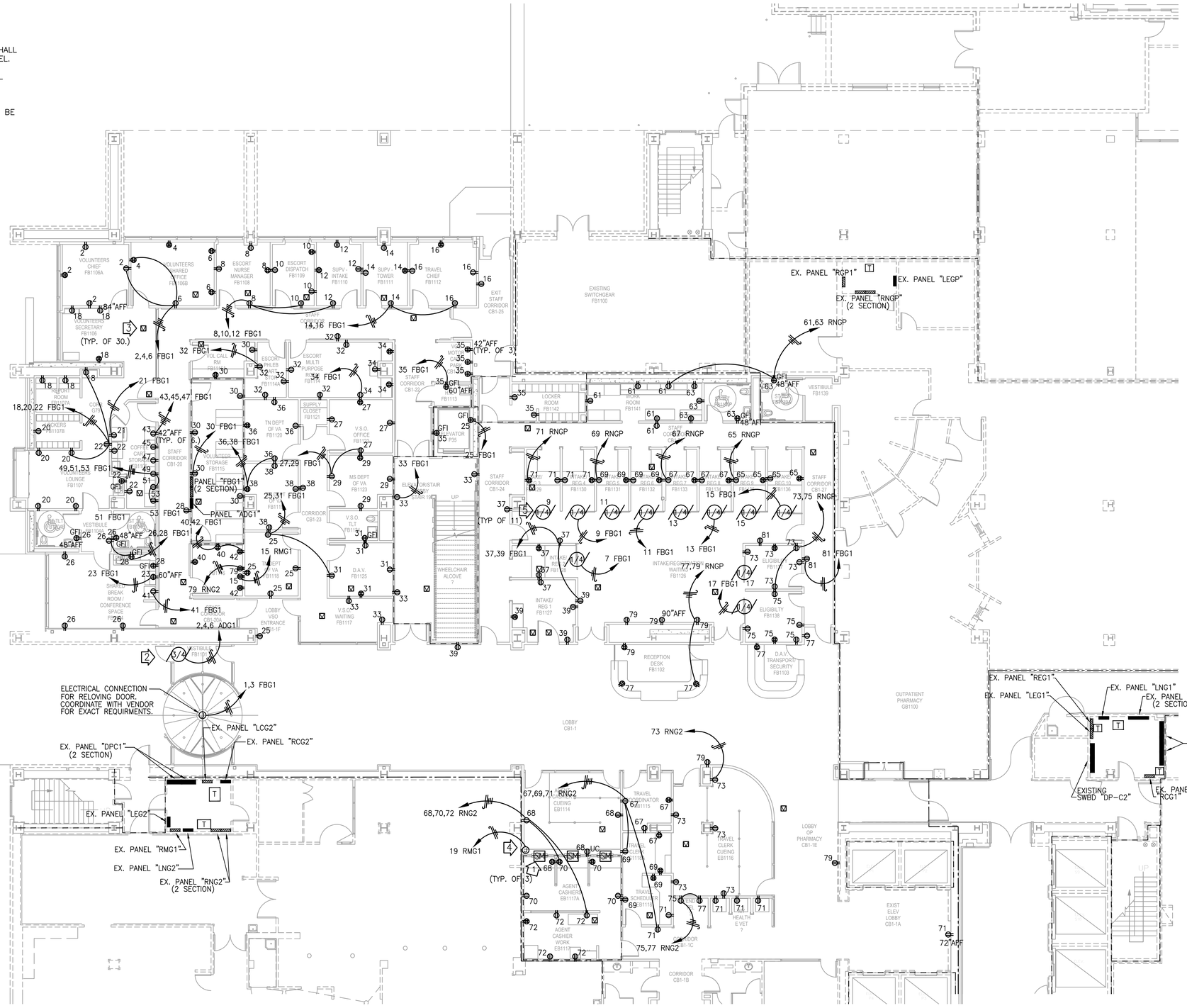

1 GROUND FLOOR PLAN – POWER
SCALE: 1/8" = 1'

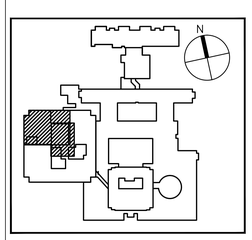

KEYPLAN

NORTH

FULLY SPRINKLERED

Revisions:	Date:

CONSULTANTS:

Allen&Hoshall
engineering since 1915
1661 International Drive Memphis, TN 38120
901 820 0820 fax 901 683 1001
www.allenhoshall.com

SEAL:

ROBERT HERD REGISTERED ENGINEER No. 022249 STATE OF TENNESSEE

ARCHITECT/ENGINEERS:

brg3s architects
11 W. Huling Avenue
Memphis, Tennessee 38103
t 901.260.9600
f 301.531.8042
w brg3s.com

DRAWING TITLE: GROUND FLOOR PLAN - POWER
SCALE: 1/8" = 1'

APPROVED PROJECT DIRECTOR:

PROJECT TITLE: VA BUILDING 1A ENTRANCE EXPANSION

LOCATION: VAMC, Memphis, Tennessee

DATE: January 27, 2014 | CHECKED: RTH | DRAWN: FJW

PROJECT NUMBER: 61660

BUILDING NUMBER: 1A

DRAWING NUMBER: EP-101

DWG. OF

GENERAL NOTES:

1. ALL CIRCUITS SHOWN ARE DIAGRAMMATIC. CONTRACTOR SHALL CIRCUIT TO FIRST AVAILABLE CIRCUIT IN DESIGNATED PANEL.
2. COORDINATE HEIGHT OF ALL DEVICES WITH ARCHITECTURAL ELEVATIONS.
3. CIRCUIT HOMERUNS SHARING THE SAME CONDUIT CANNOT SHARE THE SAME NEUTRAL. A SEPARATE NEUTRAL MUST BE PROVIDED FOR EACH HOMERUN.
4. PROVIDE HEAT TRACE FOR PLUMBING PIPING THAT IS EXPOSED TO EXTERIOR TEMPERATURES. COORDINATE WITH PLUMBING AND FIRE PROTECTION PLANS FOR MORE DETAILS. CIRCUIT HEAT TRACE BACK TO NEAREST 120/208V PANEL WITH AN AVAILABLE 120V/1P CIRCUIT.
5. PROVIDE 20/1 BREAKER FOR NEW CIRCUITS TO EXISTING PANELS, UOI.

REFERENCED NOTES:

1. DISCONNECT AND TRANSFORMER FOR NEW PANEL "FBG1" ON GROUND FLOOR. SEE SINGLE-LINE DIAGRAM ON E002 FOR DETAILS.
2. 100A/3P SHUNT-TRIP FOR ELEVATOR.
3. CONTRACTOR SHALL PROVIDE 120V CONNECTION TO VAV BOXES AS REQUIRED. CONTRACTOR SHALL USE CIRCUITS 33 AND 35 IN PANEL "DG13" TO FEED VAV BOXES SERVING THIS FLOOR. PROVIDE A 20A CIRCUIT BREAKER FOR EACH CIRCUIT. COORDINATE WITH MECHANICAL CONTRACTOR FOR EXACT LOCATION OF VAV BOXES.
4. ELECTRICAL CONNECTION FOR AUTOMATIC DOOR. ROUTE CONTROL WIRING OVER TO PUSHPLATE LOCATED IN ROOM. SEE COMMUNICATION SHEETS.

WALL RATING LEGEND
— — — — — 1-HOUR FIRE
— · — — · — 1-HOUR SMOKE

NOTE:
DEDUCTIVE ALTERNATE #1 SHALL INCLUDE THE REMOVAL OF THE ELEVATOR AND ALL ASSOCIATED COMPONENTS, CIRCUITS, AND MATERIALS FROM BASE BID.

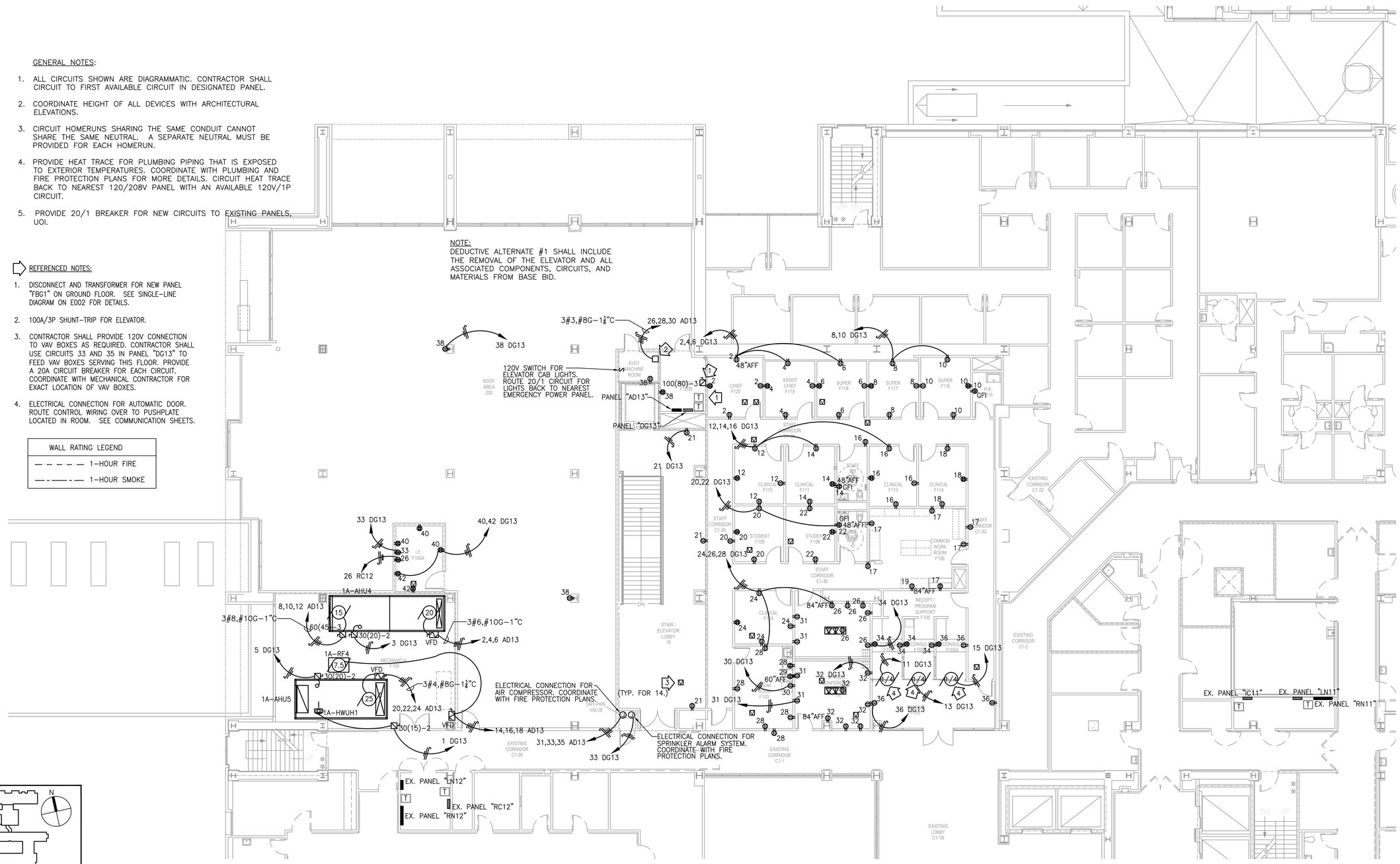

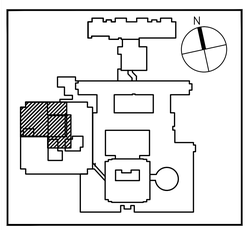

KEYPLAN

NORTH

1 1st FLOOR PLAN - POWER
SCALE: 1/8" = 1'

FULLY SPRINKLERED

Revisions:	Date:

CONSULTANTS:

Allen&Hoshall
engineering since 1915
1661 International Drive Memphis, TN 38120
901 820 0820 fax 901 683 1001
www.allenhoshall.com

SEAL:

ROBERT HERD REGISTERED ENGINEER NO. 022648 STATE OF TENNESSEE

ARCHITECT/ENGINEERS:

brg3s architects
11 W. Huling Avenue
Memphis, Tennessee 38103
t 901.260.9600
f 301.531.8042
w brg3s.com

DRAWING TITLE: 1st FLOOR PLAN - POWER
SCALE: 1/8" = 1'

APPROVED PROJECT DIRECTOR:

PROJECT TITLE: VA BUILDING 1A ENTRANCE EXPANSION

LOCATION: VAMC, Memphis, Tennessee

DATE: January 27, 2014 | CHECKED: RTH | DRAWN: FJW

PROJECT NUMBER: 61660

BUILDING NUMBER: 1A

DRAWING NUMBER: EP-102

DWG. OF

GENERAL NOTES:

1. ALL CIRCUITS SHOWN ARE DIAGRAMMATIC. CONTRACTOR SHALL CIRCUIT TO FIRST AVAILABLE CIRCUIT IN DESIGNATED PANEL.
2. COORDINATE HEIGHT OF ALL DEVICES WITH ARCHITECTURAL ELEVATIONS.
3. CIRCUIT HOMERUNS SHARING THE SAME CONDUIT CANNOT SHARE THE SAME NEUTRAL. A SEPARATE NEUTRAL MUST BE PROVIDED FOR EACH HOMERUN.
4. PROVIDE HEAT TRACE FOR PLUMBING PIPING THAT IS EXPOSED TO EXTERIOR TEMPERATURES. COORDINATE WITH PLUMBING AND FIRE PROTECTION PLANS FOR MORE DETAILS. CIRCUIT HEAT TRACE BACK TO NEAREST 120/208V PANEL WITH AN AVAILABLE 120V/1P CIRCUIT.
5. PROVIDE 20/1 BREAKER FOR NEW CIRCUITS TO EXISTING PANELS, UOI.

REFERENCED NOTES:

1. DISCONNECT AND TRANSFORMER FOR NEW PANEL "FBG1" ON GROUND FLOOR. SEE SINGLE-LINE DIAGRAM ON E002 FOR DETAILS.
2. 100A/3P SHUNT-TRIP FOR ELEVATOR.
3. CONTRACTOR SHALL PROVIDE 120V CONNECTION TO VAV BOXES AS REQUIRED. CONTRACTOR SHALL USE CIRCUIT 33 IN PANEL "DG13" TO FEED VAV BOXES SERVING THIS FLOOR. PROVIDE A 20A CIRCUIT BREAKER FOR THE CIRCUIT. COORDINATE WITH MECHANICAL CONTRACTOR FOR EXACT LOCATION OF VAV BOXES.

WALL RATING LEGEND
1-HOUR FIRE
1-HOUR SMOKE

NOTE:
DEDUCTIVE ALTERNATE #1 SHALL INCLUDE THE REMOVAL OF THE ELEVATOR AND ALL ASSOCIATED COMPONENTS, CIRCUITS, AND MATERIALS FROM BASE BID.

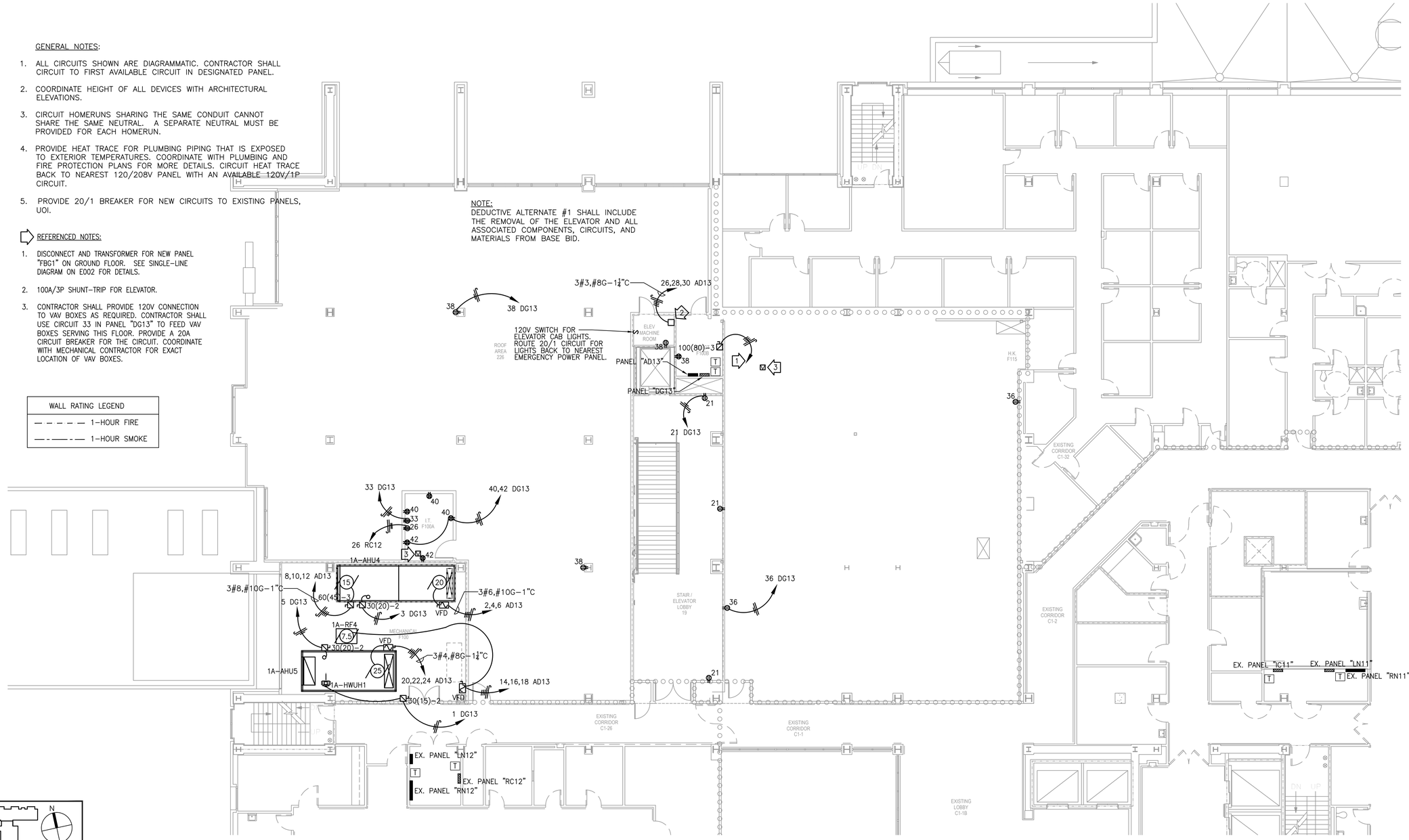

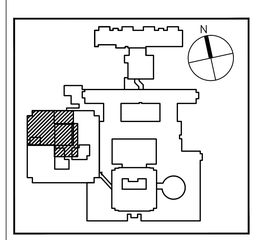

KEYPLAN

NORTH

1 1st FLOOR PLAN - POWER
SCALE: 1/8" = 1'

FULLY SPRINKLERED

Revisions:	Date:

CONSULTANTS:

Allen&Hoshall
engineering since 1915
1661 International Drive Memphis, TN 38120
901 820 0820 fax 901 683 1001
www.allenhoshall.com

SEAL:

ROBERT HERD REGISTERED ENGINEER No. 022616 STATE OF TENNESSEE

ARCHITECT/ENGINEERS:

brg3s architects
11 W. Huling Avenue
Memphis, Tennessee 38103
t 901.260.9600
f 301.531.8042
w brg3s.com

DRAWING TITLE: 1st FLOOR PLAN - POWER - Alternate #3
SCALE: 1/8" = 1'

APPROVED PROJECT DIRECTOR:

PROJECT TITLE: VA BUILDING 1A ENTRANCE EXPANSION

LOCATION: VAMC, Memphis, Tennessee

DATE: January 27, 2014 | CHECKED: RTH | DRAWN: FJW

PROJECT NUMBER: 61660

BUILDING NUMBER: 1A

DRAWING NUMBER: EP-102A3

DWG. OF

GENERAL NOTES:

1. COORDINATE HEIGHT OF ALL DEVICES WITH ARCHITECTURAL ELEVATIONS.
2. PA SPEAKER SYSTEM: APPROXIMATE LOCATION AND QUANTITY SHOWN FOR PA SPEAKERS. CONTRACTOR SHALL ACQUIRE LAYOUT FROM NICHOLS FIRE & SECURITY. PROVIDE ALL SPEAKERS, WIRE, AMPLIFIERS, ETC FOR A COMPLETE SYSTEM.
3. COORDINATE FINAL LOCATIONS OF ALL INTERCOM STATIONS, CUEING INDICATORS, SPEAKERS, SECURITY CAMERAS, AND PUSHPLATES WITH OWNER, PRIOR TO ROUGH–IN.

REFERENCE NOTES:

1. COMPUTER CONTROLLED CAMERA, MTD. 48" AFF. ROUTE CAT6 CABLE OVER TO COMPUTER IN ROOM.
2. CUEING INDICATOR, MTD. 90" AFF.
3. CUEING INDICATOR, CEILING MTD.
4. MOTION DETECTOR FOR SECURITY SYSTEM, MTD. IN CELING.
5. SPEAKER/MICROPHONE COMBINATION MTD. IN WINDOW. COORDINATE EXACT POWER REQUIREMENTS WITH WINDOW MANFUCATURER.
6. SECURITY CAMERA SHALL BE PELCO IS150–CHV9 OR APPROVED EQUAL. ROUTE (1) CAT 6 CABLE TO EXISTING CCTV SYSTEM DVR IN EXISTING COMMUNICATION ROOM. PROVIDE WALL MOUNT IF NECESSARY.
7. PUSHPLATE FOR SLIDING DOOR CONTROL.
8. NEW I.T. CLOSET – CONTRACTOR SHALL PROVIDE DATA CABLES, FIBER, PATCH PANELS, RACKS, AND CONNECTIONS AS NECESSARY TO PROVIDE A COMPLETE AND FUNCTIONING COMMUNICATIONS SYSTEM THAT IS INTEGRATED WITH EXISTING COMMUNICATIONS SYSTEM. COORDINATE WITH REPRESENTATIVE FROM VA I.T. DEPARTMENT FOR EXACT CABLE TYPES, QUANTITIES, AND INTEGRATION POINTS. ROUTE ALL DATA CABLES ON THIS FLOOR BACK TO THIS DATA CLOSET. PROVIDE STI EASY PATH FIRE PENETRATION NO. E2D33FWS OR APPROVED EQUAL. INSTALL PER MANUFACTURER'S RECOMMENDATIONS. PROVIDE MULTIPLE WHERE NEEDED BY NUMBER OF CABLES.
9. AIPHONE AX SERIES SERURITY AND COMMUNICATIONS SYSTEM OR APPROVED EQUAL. MAIN MONITOR STATION MOUNTED ON WALL TO PROVIDE 2–WAY VOICE COMMUNICATION TO AIPHONE DOOR STATIONS AT ENTRANCE. PROVIDE ALL NECESSARY WIRING, POWER SUPPLIES, AND ACCESSORIES FOR A COMPLETE FUNCTIONING SYSTEM. COORDINATE EXACT LOCATION OF UNIT IN AGENT CASHIER'S WORK AREA WITH OWNER'S REPRESENTATIVE.
10. CONTRACTOR SHALL PROVIDE AN AIPHONE AX SERIES DOOR STATION. CONTRACTOR SHALL INSTALL UNIT AND INTERCONNECT IT WITH THE MASTER MONITOR STATION.

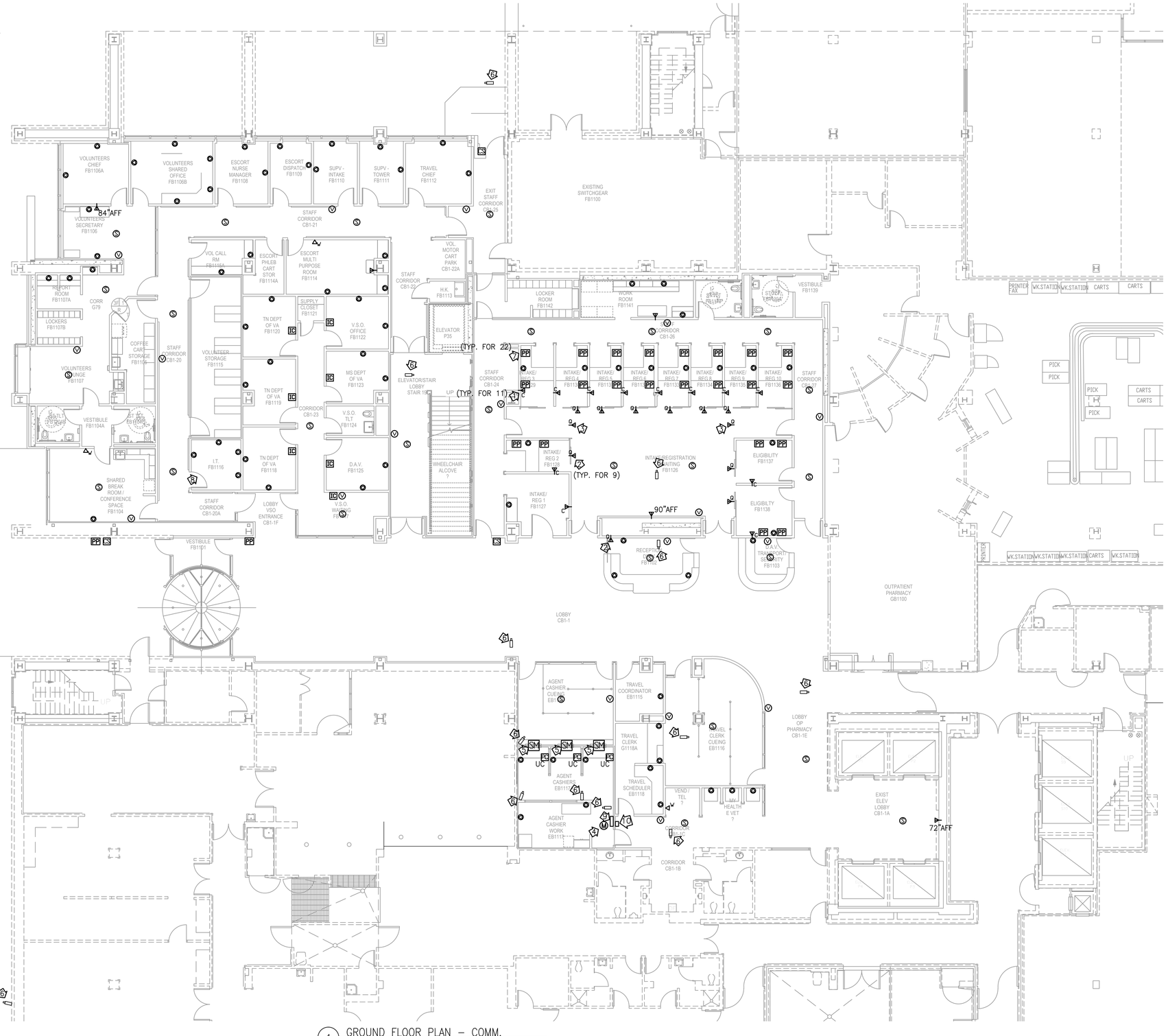

WALL RATING LEGEND

— — — — —	1–HOUR FIRE
—·—·—	1–HOUR SMOKE

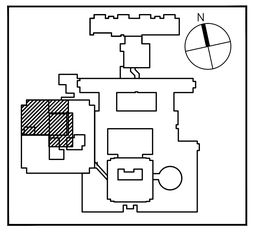

KEYPLAN

NORTH

1 GROUND FLOOR PLAN – COMM.
SCALE: 1/8" = 1'

FULLY SPRINKLERED

Revisions:	Date:

CONSULTANTS:

Allen&Hoshall
engineering since 1915
1661 International Drive Memphis, TN 38120
901 820 0820 fax 901 683 1001
www.allenhoshall.com

SEAL:

ROBERT HERD REGISTERED ENGINEER No. 022646 STATE OF TENNESSEE

ARCHITECT/ENGINEERS:

brg3s architects
11 W. Huling Avenue
Memphis, Tennessee 38103
t 901.260.9600
f 301.531.8042
w brg3s.com

DRAWING TITLE: GROUND FLOOR PLAN - COMMUNICATIONS
SCALE: 1/8" = 1'

APPROVED PROJECT DIRECTOR:

PROJECT TITLE: VA BUILDING 1A ENTRANCE EXPANSION

LOCATION: VAMC, Memphis, Tennessee

DATE: January 27, 2014 | CHECKED: RTH | DRAWN: FJW

PROJECT NUMBER: 61660

BUILDING NUMBER: 1A

DRAWING NUMBER: EC-101

DWG. OF

GENERAL NOTES:

1. COORDINATE HEIGHT OF ALL DEVICES WITH ARCHITECTURAL ELEVATIONS.
2. PA SPEAKER SYSTEM: APPROXIMATE LOCATION AND QUANTITY SHOWN FOR PA SPEAKERS. CONTRACTOR SHALL ACQUIRE LAYOUT FROM NICHOLS FIRE & SECURITY. PROVIDE ALL SPEAKERS, WIRE, AMPLIFIERS, ETC FOR A COMPLETE SYSTEM.

REFERENCE NOTES:

1. SECURITY CAMERA SHALL BE PELCO IS150-CHV9 OR APPROVED EQUAL. ROUTE (1) CAT 6 CABLE TO EXISTING CCTV SYSTEM DVR IN EXISTING COMMUNICATION ROOM.
2. NEW I.T. CLOSET – CONTRACTOR SHALL PROVIDE DATA CABLES, FIBER, PATCH PANELS, RACKS, AND CONNECTIONS AS NECESSARY TO PROVIDE A COMPLETE AND FUNCTIONING COMMUNICATIONS SYSTEM THAT IS INTEGRATED WITH EXISTING COMMUNICATIONS SYSTEM. COORDINATE WITH REPRESENTATIVE FROM VA I.T. DEPARTMENT FOR EXACT CABLE TYPES, QUANTITIES, AND INTEGRATION POINTS. ROUTE ALL DATA CABLES ON THIS FLOOR BACK TO THIS DATA CLOSET. PROVIDE STI EASY PATH FIRE PENETRATION NO. E2D33FWS OR APPROVED EQUAL. INSTALL PER MANUFACTURER'S RECOMMENDATIONS. PROVIDE MULTIPLE WHERE NEEDED BY NUMBER OF CABLES.
3. DATA CONNECTION FOR ELEVATOR CAB TELEPHONE.
4. PUSH PLATE FOR DOOR CONTROL.

WALL RATING LEGEND
— — — — — 1-HOUR FIRE
—·—·— 1-HOUR SMOKE

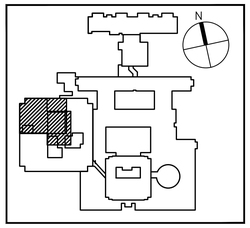

KEYPLAN

NORTH

1 1st FLOOR PLAN – COMM.
SCALE: 1/8" = 1'

FULLY SPRINKLERED

Revisions:	Date:

CONSULTANTS:

Allen&Hoshall
engineering since 1915
1661 International Drive Memphis, TN 38120
901 820 0820 fax 901 683 1001
www.allenhoshall.com

SEAL:

ROBERT HERD REGISTERED ENGINEER No. 022646 STATE OF TENNESSEE

ARCHITECT/ENGINEERS:

brg3s architects
11 W. Huling Avenue
Memphis, Tennessee 38103
t 901.260.9600
f 301.531.8042
w brg3s.com

DRAWING TITLE: 1st FLOOR PLAN - COMMUNICATIONS
SCALE: 1/8" = 1'

APPROVED PROJECT DIRECTOR:

PROJECT TITLE: VA BUILDING 1A ENTRANCE EXPANSION

LOCATION: VAMC, Memphis, Tennessee

DATE: January 27, 2014 | CHECKED: RTH | DRAWN: FJW

PROJECT NUMBER: 61660

BUILDING NUMBER: 1A

DRAWING NUMBER: EC-102

DWG. OF

GENERAL NOTES:

1. COORDINATE HEIGHT OF ALL DEVICES WITH ARCHITECTURAL ELEVATIONS.
2. PA SPEAKER SYSTEM: APPROXIMATE LOCATION AND QUANTITY SHOWN FOR PA SPEAKERS. CONTRACTOR SHALL ACQUIRE LAYOUT FROM NICHOLS FIRE & SECURITY. PROVIDE ALL SPEAKERS, WIRE, AMPLIFIERS, ETC FOR A COMPLETE SYSTEM.

REFERENCE NOTES:

1. SECURITY CAMERA SHALL BE PELCO IS150-CHV9 OR APPROVED EQUAL. ROUTE (1) CAT-6 DATA CABLE TO EXISTING CCTV SYSTEM DVR IN EXISTING COMMUNICATION ROOM.
2. NEW I.T. CLOSET – CONTRACTOR SHALL PROVIDE CAT-6 DATA CABLES, SM FIBER, PATCH PANELS, RACKS, AND CONNECTIONS AS NECESSARY TO PROVIDE A COMPLETE AND FUNCTIONING COMMUNICATIONS SYSTEM THAT IS INTEGRATED WITH EXISTING COMMUNICATIONS SYSTEM. COORDINATE WITH REPRESENTATIVE FROM VA I.T. DEPARTMENT FOR EXACT CABLE TYPES, QUANTITIES, AND INTEGRATION POINTS LOCATED IN BUILDING 6. ROUTE ALL DATA CABLES ON THIS FLOOR BACK TO THIS DATA CLOSET. PROVIDE STI EASY PATH FIRE PENETRATION NO. E2D33FWS OR APPROVED EQUAL. INSTALL PER MANUFACTURER'S RECOMMENDATIONS. PROVIDE MULTIPLE WHERE NEEDED BY NUMBER OF CABLES.
3. DATA CONNECTION FOR ELEVATOR CAB TELEPHONE.

WALL RATING LEGEND
1-HOUR FIRE
1-HOUR SMOKE

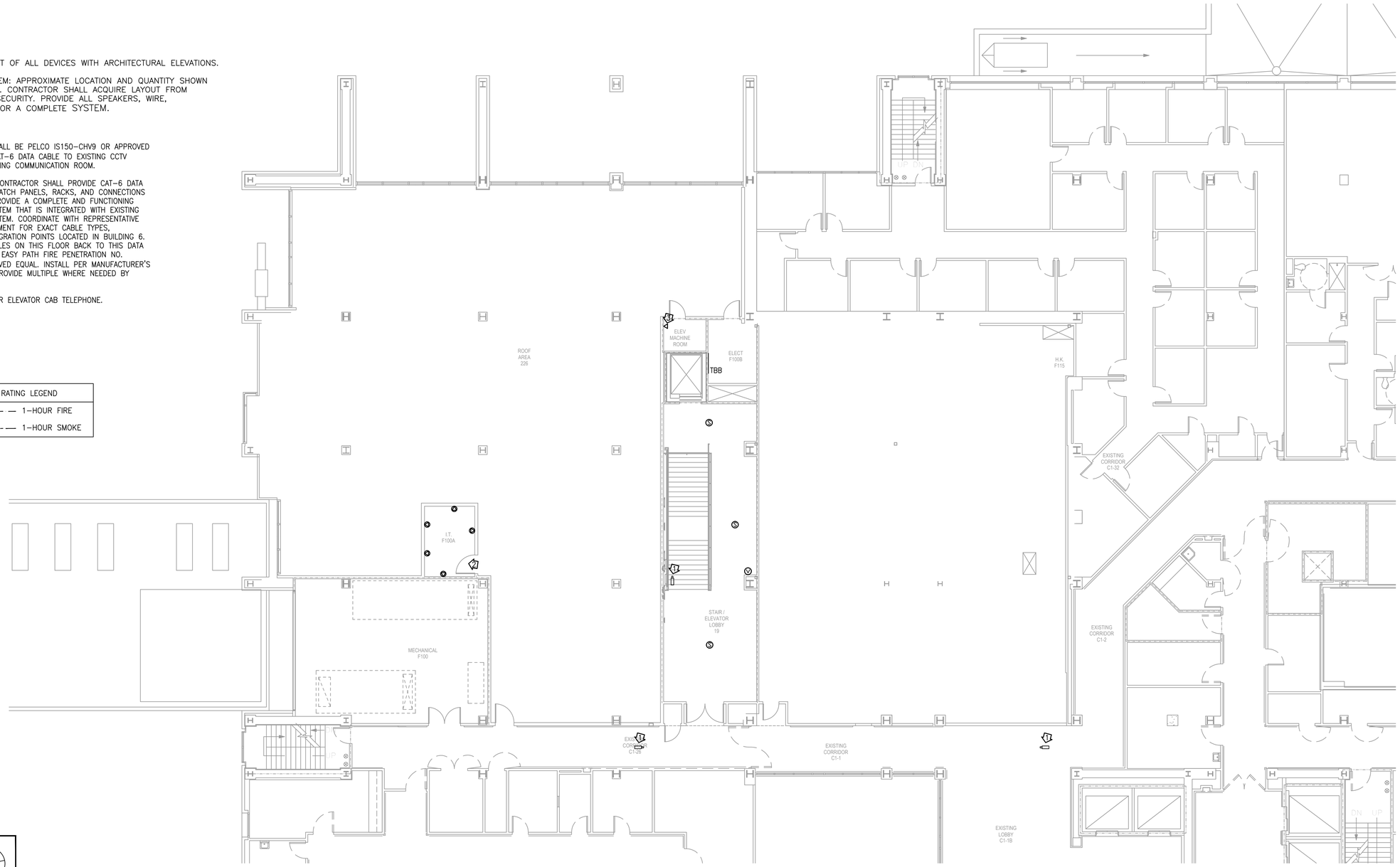

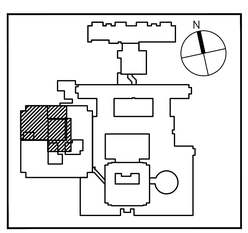

KEYPLAN

NORTH

1 1st FLOOR PLAN – COMM.
SCALE: 1/8" = 1'

FULLY SPRINKLERED

Revisions:	Date:

CONSULTANTS:

Allen&Hoshall
engineering since 1915
1661 International Drive Memphis, TN 38120
901 820 0820 fax 901 683 1001
www.allenhoshall.com

SEAL:

ROBERT HEND REGISTERED ENGINEER No. 022849 STATE OF TENNESSEE

ARCHITECT/ENGINEERS:

brg3s architects
11 W. Huling Avenue
Memphis, Tennessee 38103
t 901.260.9600
f 301.531.8042
w brg3s.com

DRAWING TITLE: 1ST FLOOR PLAN - COMMUNICATIONS - Alternate #3
SCALE: 1/8" = 1'
APPROVED PROJECT DIRECTOR:

PROJECT TITLE: VA BUILDING 1A ENTRANCE EXPANSION
LOCATION: VAMC, Memphis, Tennessee
DATE: January 27, 2014
CHECKED: RTH
DRAWN: PJW

PROJECT NUMBER: 61660
BUILDING NUMBER: 1A
DRAWING NUMBER: EC-102A3
DWG. OF