VETERANS AFFAIRS NORTHERN CALIFORNIA HEALTH CARE SYSTEM
INSTALL NEW HIGH EFFICIENCY WATER COOLER CHILLER NO. 1

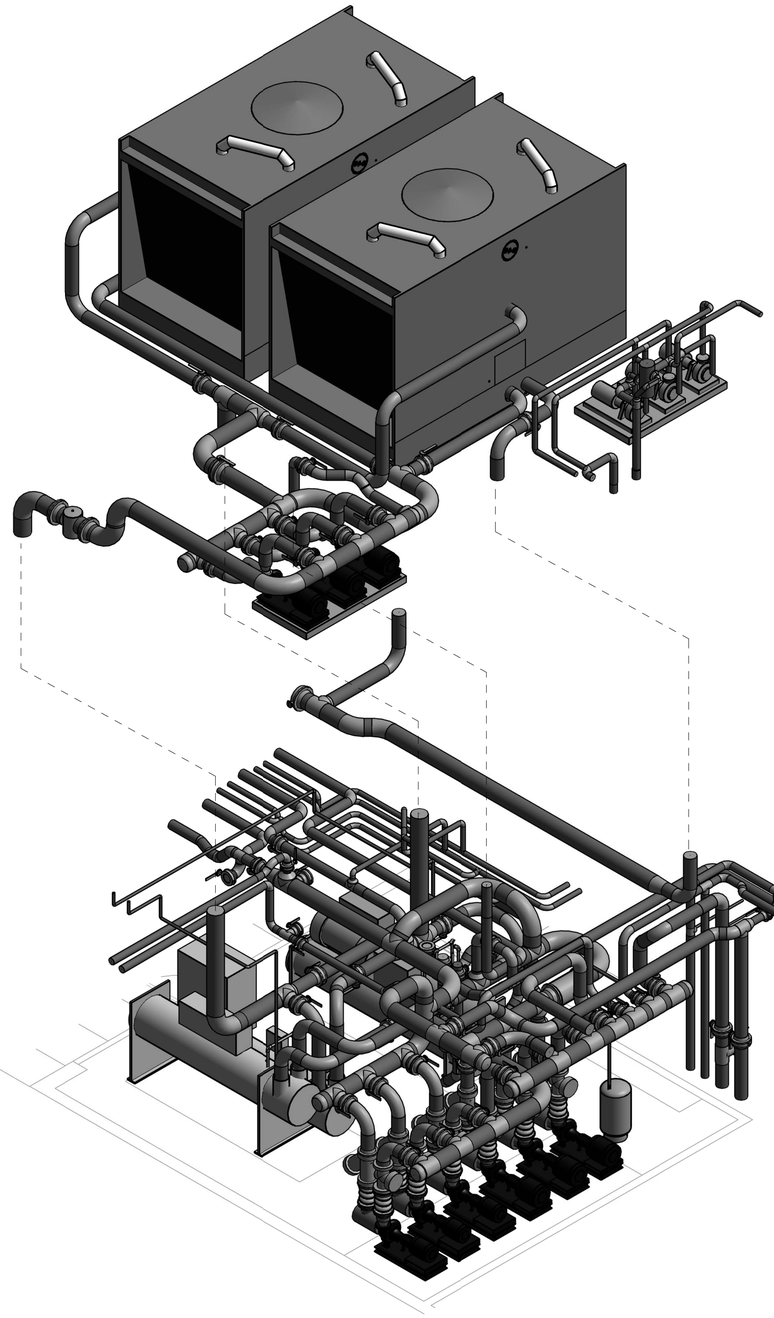

BUILDING 702 CHILLER ROOM AND ROOF 3D ISOMETRIC

VA Mather Chiller Design - Drawing List			DESIGN DEVELOPMENT 6/17/2014	CONSTRUCTION DOCUMENTS 6/30/2014	CONFORMED CONST. DOCS 7/11/2014
SHEET NUMBER	SHEET TITLE	SCALE	100% DD	100% CD	100% CD
G-000	COVER SHEET	NONE	X	X	X
A-001	ROOF PENETRATION DETAILS	1"=1'-0"		X	X
S-001	GENERAL NOTES AND TYPICAL DETAILS	NONE		X	X
702-S-101	FOUNDATION AND ROOF FRAMING PLANS	1/8"=1'-0"		X	X
S-501	DETAILS	NONE		X	X
M-001	MECHANICAL LEGEND, SYMBOLS AND ABBREVIATIONS	NONE	X	X	X
MS-101	MECHANICAL OVERALL SITE PLAN	1"=20'-0"	X	X	X
702-MD-101	MECHANICAL DEMOLITION PLAN - PHASE 0 - BLDG 702 - LEVEL 1	1/4"=1'-0"	X	X	X
702-MH-101	MECHANICAL HVAC NEW WORK PLAN - PHASE 0 -BLDG 702 - LEVEL 1	1/4"=1'-0"		X	X
702-MD-111	MECHANICAL DEMOLITION PLAN - PHASE 1 - BLDG 702 - LEVEL 1	1/4"=1'-0"	X	X	X
702-MD-112	MECHANICAL DEMOLITION PLAN - PHASE 1 - BLDG 702 - ROOF	1/4"=1'-0"	X	X	X
702-MH-111	MECHANICAL HVAC NEW WORK PLAN - PHASE 1 - BLDG 702 - LEVEL 1	1/4"=1'-0"	X	X	X
702-MH-112	MECHANICAL HVAC NEW WORK PLAN - PHASE 1 - BLDG 702 - ROOF	1/4"=1'-0"	X	X	X
702-MD-121	MECHANICAL DEMOLITION PLAN - PHASE 2 - BLDG 702 - LEVEL 1	1/4"=1'-0"	X	X	X
702-MD-122	MECHANICAL DEMOLITION PLAN - PHASE 2 - BLDG 702 - ROOF	1/4"=1'-0"	X	X	X
702-MH-121	MECHANICAL HVAC NEW WORK PLAN - PHASE 2 - BLDG 702 - LEVEL 1	1/4"=1'-0"	X	X	X
702-MH-122	MECHANICAL HVAC NEW WORK PLAN - PHASE 2 - BLDG 702 - ROOF	1/4"=1'-0"	X	X	X
702-MD-131	MECHANICAL DEMOLITION PLAN - PHASE 3 - BLDG 702 - LEVEL 1	1/4"=1'-0"	X	X	X
702-MH-131	MECHANICAL HVAC NEW WORK PLAN - PHASE 3 - BLDG 702 - LEVEL 1	1/4"-1'-0"	X	X	X
702-MD-141	MECHANICAL DEMOLITION PLAN - PHASE 4 - BLDG 702 - LEVEL 1	1/4"-1'-0"		X	X
702-MD-142	MECHANICAL DEMOLITION PLAN - PHASE 4 - BLDG 702 - ROOF	1/4"-1'-0"	X	X	X
702-MH-141	MECHANICAL HVAC NEW WORK PLAN - PHASE 4 - BLDG 702 - LEVEL 1	1/4"-1'-0"		X	X
702-MH-142	MECHANICAL HVAC NEW WORK PLAN - PHASE 4 - BLDG 702 - ROOF	1/4"-1'-0"	X	X	X
702-MH-151	MECHANICAL HVAC PIPE ANCHORAGE PLAN - BLDG 702 - LEVEL 1	1/4"-1'-0"		X	X
702-MH-152	MECHANICAL HVAC PIPE ANCHORAGE PLAN - BLDG 702 - ROOF	1/4"-1'-0"		X	X
702-MH-301	MECHANICAL HVAC SECTIONS - BLDG 702	1/4"=1'-0"	X	X	X
MH-501	MECHANICAL HVAC DETAILS - BLDG 702	NONE	X	X	X
MH-502	MECHANICAL HVAC DETAILS - BLDG 702	NONE	X	X	X
MD-601	MECHANICAL DEMOLITION DIAGRAM - BLDG 702,703	NONE	X	X	X
MH-601	MECHANICAL HVAC DIAGRAM - BLDG 702,703	NONE	X	X	X
MH-602	MECHANICAL HVAC SCHEDULES - BLDG 702	NONE	X	X	X
MI-601	MECAHNICAL HVAC CONTROLS DIAGRAM - BLDG 702, 703	NONE		X	X
E-001	ELECTRICAL SYMBOLS AND ABBREVIATIONS	NONE	X	X	X
ES-101	ELECTRICAL OVERALL SITE PLAN	1"=20'-0"	X	X	X
701-ED-101	ELECTRICAL DEMOLITION PLAN - BLDG 701 - LEVEL 1	1/4"=1'-0"	X	X	X
702-ED-101	ELECTRICAL DEMOLITION PLAN - BLDG 702 - LEVEL 1	1/4"=1'-0"	X	X	X
702-ED-102	ELECTRICAL DEMOLITION PLAN - BLDG 702 - ROOF	1/4"=1'-0"	X	X	X
701-EP-101	ELECTRICAL POWER PLAN - BLDG 701 - LEVEL 1	1/4"=1'-0"	X	X	X
702-EP-101	ELECTRICAL POWER PLAN - BLDG 702 - LEVEL 1	1/4"=1'-0"	X	X	X
702-EP-102	ELECTRICAL POWER PLAN - BLDG 702 - ROOF	1/4"=1'-0"	X	X	X
E-501	ELECTRICAL DETAILS	NONE	X	X	X
ED-601	ELECTRICAL DEMOLITION POWER SINGLE LINE DIAGRAM	NONE	X	X	X
EP-601	ELECTRICAL POWER SINGLE LINE DIAGRAM	NONE	X	X	X
EP-602	ELECTRICAL SCHEDULES	NONE	X	X	X

DESIGN APPROVAL

138 CHIEF ENGINEER	DATE
BUILDING SERVICE REP	DATE
001/SVD ASSOC DIRECTOR	DATE
001/EBD ASSOC DIRECTOR	DATE
11 CHIEF OF STAFF	DATE
118 ASSOC DIRECTOR PC/NURSING	DATE
00 DIRECTOR	DATE

DEPARTMENT OF VETERANS AFFAIRS
MATHER CAMPUS
10535 HOSPITAL WAY
MATHER, CA 95655

VA PROJECT NO : 612A4-14-006

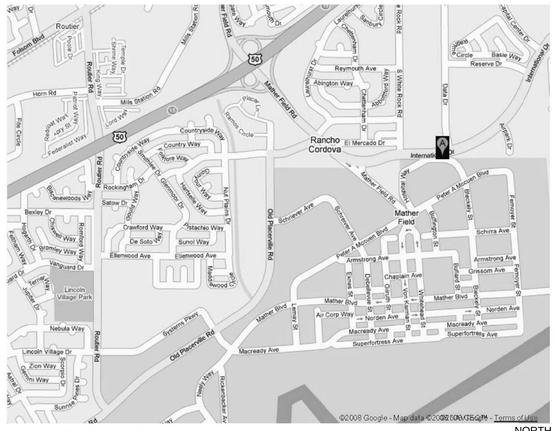

VICINITY MAP

NORTH

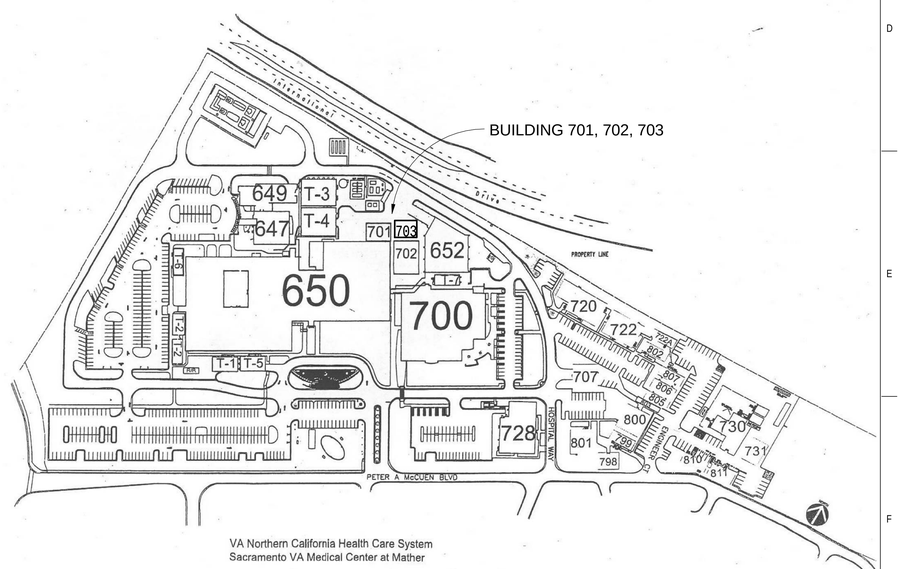

CAMPUS MAP

NORTH

VA CONTACT

DEPARTMENT OF VETERANS AFFAIRS
HADI JANBAKHSHZADEH, COR
150 MUIR ROAD, AB4
MARTINEZ, CA 94553
TEL: 925.372.2228

ARCHITECT

HILLIARD ARCHITECTS, INC.
MIKE HILLIARD, AIA, NCARB, LEED AP
251 POST STREET, SUITE 620
SAN FRANCISCO, CA 94108
TEL: 415.989.6400
FAX: 415.989.3056

STRUCTURAL ENGINEER

BUEHLER & BUEHLER STRUCTURAL ENGINEERS, INC.
600 Q STREET, SUITE 200
SACRAMENTO, CA 95811
TEL: 916.443.0303
FAX: 916.443.0313

MECHANICAL ENGINEER

AFFILIATED ENGINEERS, INC.
123 MISSION STREET, 7TH FLOOR
SAN FRANCISCO, CA 94105
TEL: 415.764.3746
FAX: 415.746.3701

COST ESTIMATOR

TBD CONSULTANTS
GORDON BEVERIDGE, PRINCIPAL
111 PINE STREET, SUITE 1315
SAN FRANCISCO, CA 94111
TEL: 415.981.9430
FAX: 415.981.9434

7/10/2014 9:23:36 AM HILLIARD ARCHITECTS INC. COPYRIGHT

Revisions:	Date
CONFORMED CONST. DOCUMENTS	07.11.14
CONSTRUCTION DOCUMENTS	06.30.14
DESIGN DEVELOPMENT 2	06.13.14

VA FORM 08-6231

CONSULTANTS:

Affiliated Engineers®

Affiliated Engineers W, Inc.
123 Mission Street, 7th Floor
San Francisco, California 94105
415.764.3700

ARCHITECT/ENGINEERS:

Hilliard ARCHITECTS

251 Post Street, Suite 620
San Francisco, CA 94108
Tel 415 989 6400
www.HilliardArchitects.com

Drawing Title: COVER SHEET

Approved: Project Director

Project Title: Install New High Efficiency Water Cooled Chiller No. 1

Location: VANCHCS; MATHER, CA

Date: 7.11.2014 | Checked: AEI | Drawn: AEI

Project Number: 612A4-14-006

Building Number: 701,702,703

Drawing Number: G-000

Dwg. of

Office of Construction and Facilities Management

Department of Veterans Affairs

GENERAL NOTES

1. THE CONTRACTOR IS RESPONSIBLE FOR OBTAINING ALL NECESSARY PERMITS AND APPROVALS REQUIRED FROM REGULATING AGENCIES BEFORE STARTING ANY WORK.

2. THE CONTRACTOR SHALL BE SOLELY AND COMPLETELY RESPONSIBLE FOR THE WORKING CONDITIONS AT THE JOB SITE, INCLUDING THE SAFETY OF ALL PERSONS AND PROPERTY

3. THE CONTRACTOR SHALL MAINTAIN THE PREMISES IN A CLEAN AND ORDERLY MANNER. PATHS OF TRAVEL SHALL NOT BE BLOCKED. THE CONTRACTOR SHALL LEAVE AREA CLEAN AND FREE OF DEBRIS AT THE END OF EACH WORK DAY.

4. THE CONTRACTOR SHALL BE RESPONSIBLE FOR REMOVING ALL LEFT OVER MATERIALS, DEBRIS, TOOLS AND EQUIPMENT USED IN THE CONSTRUCTION AT THE END OF THE PROJECT.

5. CONTRACTOR TO COORDINATE ALL WORK OF ALL TRADES AND WORKING TIME AND METHODS WITH THE VA TO INSURE MINIMUM DISTURBANCE TO THE BUILDING FUNCTIONS WILL OCCUR.

6. OTHER AREAS OF BUILDING WILL REMAIN OCCUPIED DURING CONSTRUCTION. WORK MAY NEED TO BE PERFORMED OUTSIDE REGULAR BUSINESS HOURS IF DEEMED DISRUPTIVE BY THE COR. COSTS ASSOCIATED WITH THIS REQUIREMENT SHALL BE INCLUDED IN THE BASE BID AND WILL NOT BE BILLABLE SEPARATELY TO THE GOVERNMENT.

7. THE CONTRACTOR IS RESPONSIBLE FOR CHECKING FIELD CONDITIONS PRIOR TO COMMENCEMENT OF WORK. THE CONTRACTOR SHALL REPORT ANY PROBLEMS TO THE VA COR. CHANGES RESULTING FROM CONDITIONS ARISING IN THE FIELD WHICH ARE NOT BROUGHT TO THE ATTENTION OF THE VA COR WILL NOT RESULT IN ANY ADDITIONAL COST TO THE GOVERNMENT.

8. LOCATIONS OF ALL UTILITY LINES (DUCTS, PIPES, CONDUITS, AND OTHER OVERHEAD OBSTRUCTIONS) SHOWN ARE APPROXIMATE. COORDINATE ALL SUPPORT SYSTEMS SO AS NOT TO INTERFERE WITH EACH OTHER. PROVIDE ADDITIONAL BRACING AS NECESSARY TO COMPLETE THE INSTALLATION AT NO INCREASE TO THE CONTRACT SUM.

9. WHERE EXISTING FIREPROOFING WERE REMOVED FOR THE NEW CONSTRUCTION, PROVIDE NEW FIREPROOFING AS REQUIRED TO PATCH EXISTING FIREPROOFING. PATCH WORK SHALL MATCH EXISTING ADJACENT AREA IN CONSTRUCTION, MATERIAL, TYPE, AND FIRE RESISTIVE RATINGS.

10. IN ALL CONSTRUCTION AREAS, SEAL ALL PENETRATIONS SUCH AS DUCTS, CONDUITS, PIPES, ETC. AT FIRE RESISTIVE RATED PARTITIONS AND FLOOR/CEILING ASSEMBLIES, WHETHER SHOWN OR NOT AT NO CHANGE TO THE CONTRACT SUM. USE SEALANT TYPE TO MAINTAIN PROPER FIRE RESISTIVE RATING OF THE PENETRATED ASSEMBLIES. ALL PENETRATIONS AT FIRE RESISTIVE RATED PARTITIONS OR FLOOR/CEILING ASSEMBLIES SHALL BE IN ACCORDANCE WITH THE APPROPRIATE U.L. LISTED APPROVED SYSTEMS.

11. DO NOT SCALE THE DRAWINGS. WRITTEN DIMENSIONS SHALL TAKE PRECEDENCE OVER SCALED DIMENSIONS. IF ANY DISCREPANCIES OR OMISSIONS IN THE DIMENSIONS ARE DISCOVERED, THE CONTRACTOR SHALL NOTIFY THE CONTRACTING OFFICER IMMEDIATELY. ANY WORK DONE WITHOUT PROPER NOTIFICATION BEING GIVEN TO THE CONTRACTING OFFICER IS THE SOLE RESPONSIBILITY OF THE CONTRACTOR.

12. ANY DAMAGE DONE BY THE CONTRACTOR TO ADJACENT BUILDINGS AND SITEWORK SHALL BE REPAIRED TO ORIGINAL CONDITION AND FUNCTION. ALL SUCH PATCHING AND REPAIR SHALL BE DONE AT THE CONTRACTOR'S EXPENSE.

13. MATCH EXISTING INSULATION AND ROOFING.

14. CONTRACTOR TO HAVE PRE-ROOFING CONFERENCE WITH ROOFING FOREMAN, SHEET METAL FORMAN, VA COR AND ARCHITECTIN ATTENDANCE. CONTRACTOR TO DISTRIBUTE PRE-ROOFING CONFERENCE REPORT TO ALL PARTIES.

15.REPORT TO INCLUDE LIST OF ALL MATERIALS TO BE USED, SEQUENCE OF WORK AND BY WHICH CREWS TO ACCOMPLISH ROOFING.

APPLICABLE CODES & STANDARDS

ALL CONSTRUCTION WORK SHALL CONFORM TO THE MOST CURRENT EDITION OF ALL APPLICABLE LOCAL, STATE AND FEDERAL CODES AND GUIDELINES. REFER TO THE VA TECHNICAL INFORMATION LIBRARY AT HTTP://WWW.CFM.VA.GOV/TIL/ FOR FURTHER INFORMATION. THE FOLLOWING PRIMARY CODES/REQUIREMENTS/GUIDES MUST BE FOLLOWED:

INTERNATIONAL BUILDING CODE (IBC)

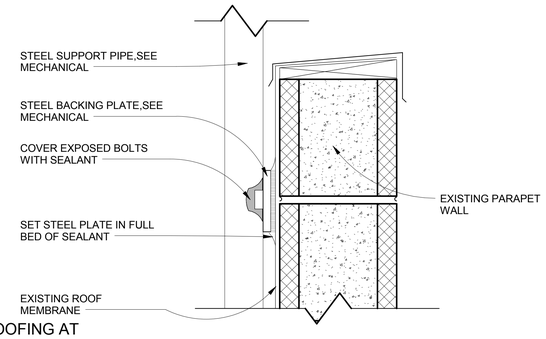

13 WATER PROOFING AT PARAPET WALL
3" = 1'-0"

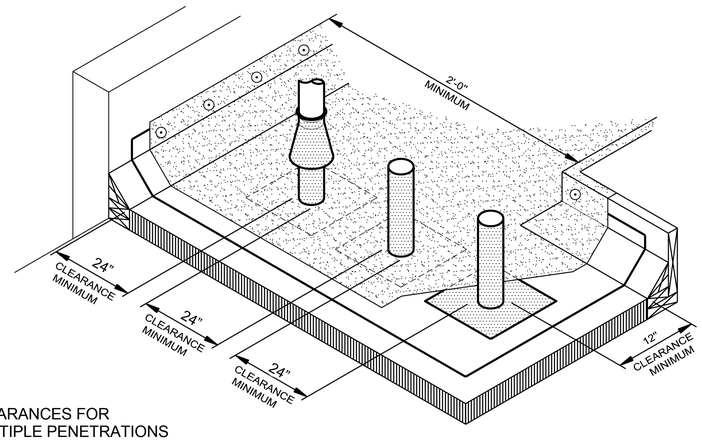

22 CLEARANCES FOR MULTIPLE PENETRATIONS
6" = 1'-0"

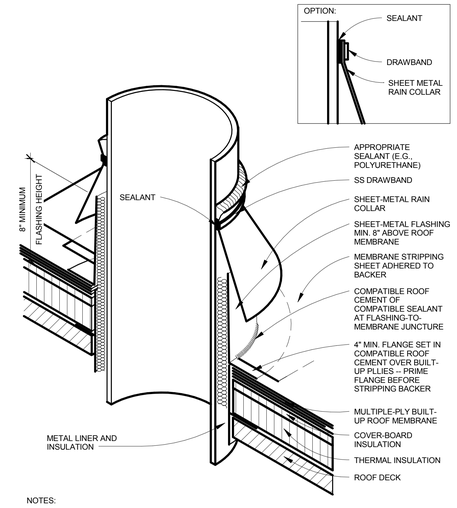

NOTES:

1. THIS DETAIL ALLOWS THE OPENING TO BE COMPLETED BEFORE THE STACK IS PLACED.

2. THE CLEARANCE NECESSARY BETWEEN THE OPTIONAL INSULATION AND METAL LINER AND THE STACK WILL DEPEND ON THE TEMPERATURE OF THE MATERIAL HANDLED BY THE STACK.

25 ISOMETRIC - ISOLATED STACK FLASHING -- SHEET METAL
1" = 1'-0"

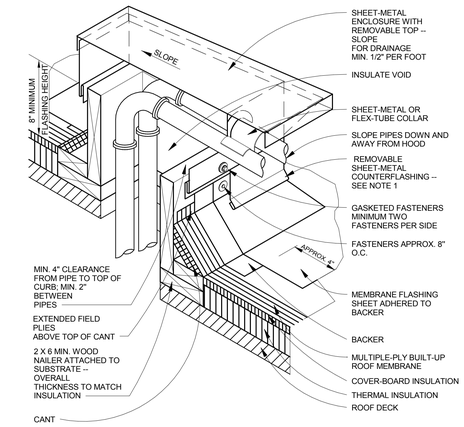

NOTES:

1. WHERE THE SHEET-METAL ENCLOSURE OVERLAPS THE BASE FLASHING AT LEAST 3 INCHES, THE REMOVABLE SHEET-METAL COUNTERFLASHING IS NOT REQUIRED.

27 BUR ISOMETRIC - FLASHING AT SHEET METAL ENCLOSURE FOR PIPING THROUGH METAL ROOF DECK
1" = 1'-0"

NOTES:

1. THIS DETAIL ALLOWS THE OPENING TO BE COMPLETED BEFORE THE STACK IS PLACED.

2. THE CLEARANCE NECESSARY BETWEEN THE INSULATION AND METAL LINER AND THE STACK WILLL DEPEND ON THE TEMPERATURE OF THE MATERIAL HANDLED BY THE STACK.

(FILE BUR-18BS)

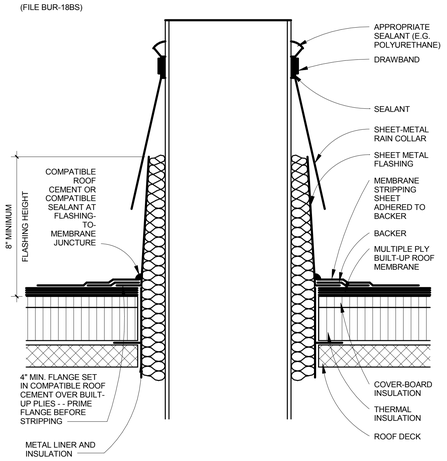

50 ISOLATED STACK FLASHING -- SHEET METAL
1" = 1'-0"

NOTE:
MAXIMUM OF 3 PENETRATIONS FOR ANY 10' X 10' AREA

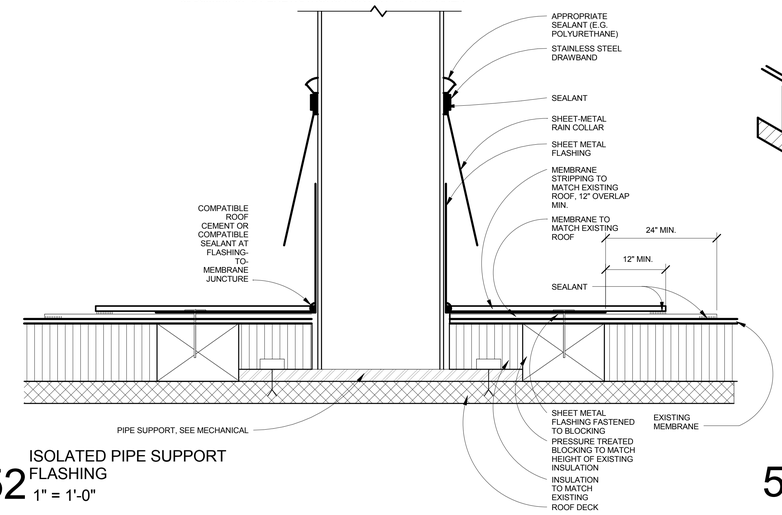

52 ISOLATED PIPE SUPPORT FLASHING
1" = 1'-0"

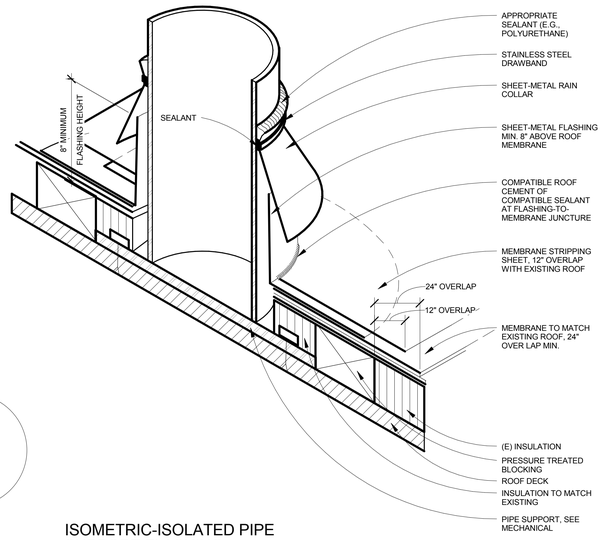

55 ISOMETRIC-ISOLATED PIPE SUPPORT FLASHING
1" = 1'-0"

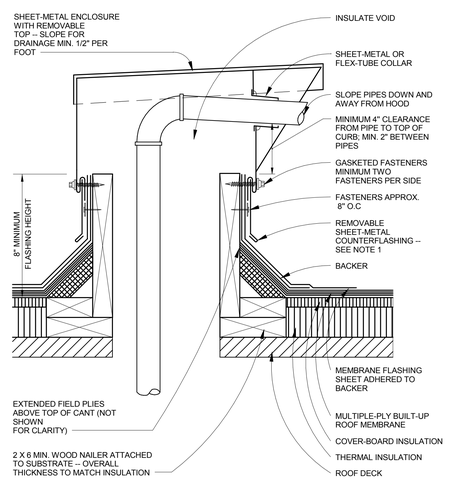

NOTES:
1. WHERE THE SHEET-METAL ENCLOSURE OVERLAPS THE BASE FLASHING AT LEAST 3 INCHES, THE REMOVABLE SHEET-METAL COUNTERFLASHING IS NOT REQUIRED. (FILE BUR-17S)

57 BUR_FLASHING AT SHEET METAL ENCLOSURE FOR PIPING THROUGH ROOF DECK
1" = 1'-0"

HILLIARD ARCHITECTS INC. COPYRIGHT

7/11/2014 5:16:30 PM

Revisions:	Date

CONSULTANTS:

ARCHITECT/ENGINEERS:

Hilliard ARCHITECTS
251 Post Street, Suite 620
San Francisco, CA 94108
Tel 415 989 6400
www.HilliardArchitects.com

Drawing Title: ROOF PENETRATION DETAILS

Approved: Project Director

Project Title: INSTALL NEW HIGH EFFICIENCY WATER COOLED CHILLER

Location: VA MATHER

Date: 07.11.2014 | Checked: HAI | Drawn: HAI

Project Number: 612A4-14-006

Building Number: 702

Drawing Number: A-001

Dwg. of

Office of Construction and Facilities Management

Department of Veterans Affairs

VA FORM 08-6231

GENERAL NOTES/TYPICAL DETAILS

APPLICABLE TO ALL DRAWINGS UNLESS NOTED OR SHOWN OTHERWISE

GENERAL NOTES

100SN001-1

1. Interpretation of Drawings & Specifications
   a. Where specifications have been prepared for this project, they are arranged in several sections, but such separation shall not be considered as the limits of the work required of any separate trade. The terms and conditions of such limitations are wholly between the contractor and his subcontractors.
   b. In general, the working details will indicate dimensions, position and kind of construction, and the specifications, qualities and methods. Any work indicated on the working details and not mentioned in the specifications, or vice versa, shall be furnished as though fully set forth in both. Work not particularly detailed, marked or specified, shall be identical or similar to like cases of construction that are detailed, marked or specified. If conflicts occur on drawings and/or specifications, the most expensive materials or methods will prevail.
   c. Should an error appear in the working details or specifications or in work done by others affecting this work, the Contractor shall notify the Architect at once and in writing. If the Contractor proceeds with the work so affected without having given such written notice and without receiving the necessary approval, decision or instructions in writing from the Owner, then he shall have no valid claim against the Owner, for the cost of so proceeding and shall make good any resulting damage or defect. No verbal approval, decision, or instruction shall be valid or be the basis for any claim against the Owner, its officers, employees or agents. The foregoing includes typical errors in the specifications or notational errors in the working details where the interpretation is doubtful or where the error is sufficiently apparent as to place a reasonably prudent contractor on notice that, should he elect to proceed, he is doing so at his own risk.
2. Construction shall conform to all applicable codes and regulations.
3. Shop Drawing Note:
   a. When not addressed by division 1 of the specifications, paper format Structural Shop Drawings shall be submitted in the form of three copies minimum of each sheet. Where submittals are electronic, format shall be PDF.
   b. The purpose of Shop Drawing submittals by the Contractor is to demonstrate to the Structural Engineer that he understands the design concept by indicating which material he intends to furnish and install, and by detailing the fabrication and installation methods he intends to use on a stand alone set of documents. Duplication of design documents for the purpose of shop drawings is not acceptable.
   c. Prior to fabrication, Shop Drawings shall be submitted for review by the Structural Engineer. Shop Drawing submittals shall include, but are not necessarily limited to, structural steel, reinforcing steel, & glue-laminated beams.
   d. Prior to submission the Contractor shall review all submittals for conformance with the Contract Documents and shall stamp submittals as being "Reviewed for Conformance".
   e. Shop Drawing submittals processed by the Structural Engineer are not Change Orders.
   f. Any detail on the Shop Drawings that deviates from the Contract Documents shall clearly be marked with the note "This is a change".
   g. Shop drawings or calculations submitted for review that require resubmittal for re-review shall be billed hourly for such time to the General Contractor. Re-review will not proceed without written approval from the General Contractor for additional engineering review services.
4. Safety Note:
   a. It is the Contractors responsibility to comply with the pertinent sections, as they apply to this project, of the "Construction Safety Orders" issued by the State of California latest edition, and all OSHA requirements.
   b. The Contractor shall be responsible for adequate design and construction of all forms and shoring required. Shoring indications (location, direction, duration, etc.) are only shown on the Structural dwgs when required to implement the design intent of the final work product. Determination whether shoring is required for temporary or intermediate conditions during construction is wholly the responsibility of the contractor.
   c. The Owner and the Structural Engineer do not accept any responsibility for the Contractor's failure to comply with these requirements.
5. The contractor shall notify the Architect and Structural Engineer where a conflict or discrepancy occurs between the Structural drawings and any other portion of the Contract Documents or existing field conditions. Such notification shall be given in due time so as not to affect the construction schedule. In case of a conflict between Structural drawings and specifications the more restrictive condition shall take precedence unless written approval has been given for the least restrictive. Contractor shall verify all dimensions with Architectural prior to commencing any work.
6. When construction attaches to or is within an existing building, a complete set of drawings of the existing building shall be kept on the job site. Contractor to obtain these drawings from the Owner (if they are available).
7. Contractor shall provide an allowance equal to 2% of the bid for structural steel, misc. iron and reinforcing steel to be used at the discretion of the Structural Engineer. Unused amount to revert to the Owner upon completion of the job.
8. Any substitutions for structural members, hardware or details shall be reviewed by the Architect and Structural Engineer. Such review will be billed on a time and materials basis to the General Contractor with no guarantee that the substitution will be allowed.
9. Do not scale drawings. Contact the Architect or Structural Engineer for any dimensions not shown.
10. These drawings are not complete until reviewed and accepted by local Building Officials and the Owner and signed by the Structural Engineer.

ABBREVIATIONS

100SN003-1

AB	Anchor Bolt	MI	Malleable Iron
abv	Above	mtl	Metal
blw	Below	(n)	New
bof	Bottom of Footing	NIC	Not in Contract
brg	Bearing	NS	Near Side
btwn	Between	nts	Not to Scale
cc	Center to Center	NW	Normal Weight
CJ	Construction Joint	OH	Opposite Hand
clr	Clear	OSB	Oriented Strand Board
CMU	Concrete Masonry Unit	pc	Piece
cont	Continuous	PJP	Partial Joint Penetration
contr	Contractor	PT	Pressure Treated
CP	Complete Joint Penetration	rein	Reinforcing
csk	Countersink	rwd	Redwood
DF	Douglas Fir	SC	Slip Critical
DL	Dead Load	shtg	Sheathing
do	Ditto	sim	Similar
dwg	Drawing	SJ	Slab Control Joint
(e)	Existing	SMS	Sheet Metal Screw
EF	Each Face or Edge Fastener	SP	Structural Panel
EJ	Expansion Joint	stfnr	Stiffener
Elev	Elevation	stgrd	Staggered
EN	Edge Nailing	stl	Steel
eos	Edge of Slab	t&b	Top & Bottom
eq	Equal	t&g	Tongue & Groove
EW	Each Way	thrd	Threaded
EWEF	Each Way Each Face	tn	Toe Nail
FB	Face of Block(or Brick) or Flat Bar	to	Top of
FC	Face of Concrete or Framing Clip(Simpson A35 uno)	toc	Top of Concrete (slab uno)
FF	Finish Floor	tof	Top of Footing or Top of Framing
FS	Face of Stud or Far Side	tos	Top of Steel
FT	Fire Treated	tow	Top of Wall
ga	Gauge or gage	uno	Unless Noted Otherwise
glb	Glued Laminated Beam	VIF	Verify In Field
HDG	Hot Dipped Galvanized	w/	with
hdr	Header	w/o	without
HSB	High Strength Bolt	wp	Work Point
HSS	Hollow Structural Section	WS	Wood Screw
ht	Height	WWF	Welded Wire Fabric
jh	Joist Hanger	℄	Centerline
LL	Live Load	PL	Plate
LLH	Long Leg Horizontal	WF	Wide Flange
LLV	Long Leg Vertical	#	Number or Pounds
LS	Lag Screw	sq	Square
LW	Light Weight	∅	Round or Diameter
LWIC	Light Weight Insulating Conc	(symbol)	Cont Wood in Section
MB	Machine Bolt	(symbol)	Wood Blocking in Section
mfr	Manufacturer	(a)	"member" above
		(b)	"member" below

DESIGN CRITERIA

100SN002-1

1. Codes and Standards
   2013 California Building Code (CBC)
   ASCE 7-10
   ACI 318-11
   AISC 360-10, 341-10, 358-10
   TMS 402-11/ACI 530-11/ASCE 5-11
   TMS 602-08/ACI 530.1-08/ASCE 6-08
   2012 NDS, 2008 SDPWS
2. Vertical loads
   Roof Live Load = 20 psf
4. Lateral loads
   Seismic:
   Site Class D
   Ss = 0.548 ; Sds = 0.498
   S1 = 0.261 ; Sd1 = 0.327
   I_P = 1.5 per ASCE 7-10 sect 13.1.3
   Risk Category: IV
   Seismic Design Category: D
   Seismic Force Resisting System: (e) Masonry Bearing Walls
   Wind:
   V_{ult} = 115 mph ; V_{asd} = 89 mph
   Risk Category: IV
   Exposure Category: C
   GCpi = ±0.18

STATEMENT OF STRUCTURAL SPECIAL INSPECTIONS AND TESTING

100SN004-1

1. Special inspections and testing shall be provided by an inspection agency, employed by the owner, and qualified by the building official to inspect the particular type of construction. Tests and inspections, as required by sections 110, 1704, 1705.10, 1705.11 and 1705.12 of the 2013 CBC, shall be performed during construction on the types of work listed below:

	Inspections/Testing
■ Structural Steel Construction	Section 1705.2.1
□ Steel Construction other than Structural Steel	Section 1705.2.2
□ Cold-formed Steel Trusses Spanning ≥ 60 ft	Section 1705.2.2.2
■ Concrete Construction	Section 1705.3
□ Masonry Construction-Level A	Section 1705.4
■ Masonry Construction-Level B	Section 1705.4
□ Masonry Construction-Level C	Section 1705.4
□ Prefabricated Wood Structural Elements	Section 1705.5
□ High Load Diaphragm	Section 1705.5.1
□ Metal-Plate-Connected Wood Trusses Spanning ≥ 60 ft	Section 1705.5.2
□ Soils	Section 1705.6
□ Driven Deep Foundations	Section 1705.7
□ Cast-in-place Deep Foundations	Section 1705.8
□ Helical Pile Foundations	Section 1705.9
■ Post-Installed Anchors	See Drilled-In Anchor Notes

Lateral Force-Resisting System:

	Inspections/Testing
□ Structural Steel	Section 1705.11.1 & Section 1705.12
□ Structural Wood	Section 1705.11.2
□ Cold-Formed Steel Light-Frame Construction	Section 1705.11.3
□ Concrete Reinforcement	Section 1705.12.1

2. Inspections shall be continuous or periodic as noted for the individual material or component inspection sections and tables noted above.
3. The special inspector shall submit inspection reports to the building official and the design professional in responsible charge. The reports shall indicate whether work inspected conformed to the Construction Documents. Any discrepancies shall be immediately brought to the attention of the Contractor for correction. If discrepancies are not corrected, they shall be brought to the attention of the building official and the design professional in responsible charge.
4. All Special Inspection Agencies / Individuals and Shop Fabricators shall be approved by the building official prior to commencement of work.
5. Testing and inspection records shall be retained until completion of construction.
6. The Contractor shall submit a written statement to the building official acknowledging responsibility for construction of the main lateral-force resisting system prior to commencement of that work as required by section 1704.4 of the 2013 CBC.
7. All soils and foundation excavation inspections shall be by the Geotechnical Engineer of Record.
8. For testing and inspection requirements for non-structural materials and components, see construction documents and comply with chapter 17 of the 2013 CBC.
9. Special inspections and testing of the lateral force resisting system shall be performed as noted above.

CONCRETE

300SN001-1

1. Structural concrete shall attain 28 day compressive strength as required in note #28. Maximum slump shall not exceed 4 inches.
2. Concrete mix designs shall be prepared by a registered Civil Engineer, reviewed by Owner's testing laboratory and submitted to the Structural Engineer for review.
3. Cementitious materials:
   Cement shall conform to ASTM C-150 type II or V.
   Fly ash shall conform to ASTM C-618. Max. quantity of fly ash shall be as given in specs (15% max uno).
4. Concrete aggregates shall conform to ASTM C-33 for normal weight concrete and ASTM C-330 for lightweight concrete.
5. Non-shrink grout or drypack shall consist of a premixed nonmetallic formula.
6. Reinforcing steel shall conform to ASTM A-615 Grade 60 for #3 and larger, except reinforcing steel to be welded shall conform to ASTM A-706. Contractor shall submit rebar mill certificates.
7. All preheating and welding of reinforcing bars shall be done in accordance with AWS D1.4 latest edition and shall be continuously inspected by a qualified laboratory. Contractor shall furnish WPS for all rebar welding to the laboratory.
8. Reinforcing steel shall be fabricated according to "Manual of Standard Practice for Reinforced Concrete Construction".
9. Wire fabric shall conform to ASTM A-185.
10. Dimensions shown for location of reinforcing are to the face of bars listed and denote clear coverage. Non-prestressed, cast-in-place concrete coverage shall be as follows, uno:
    Concrete deposited directly against ground (except slabs)--- 3"
    Concrete exposed to ground or weather but placed in forms:
    #5 and smaller---------------------------- 1-1/2"
    #6 and larger---------------------------- 2"
    Beams & Columns (ties)------------------------ 1-1/2"
    Beams & Columns (main reinforcing)---------------- 2"
    Cast-In-Place Walls (exterior face & soil side)--------- see above
    Cast-In-Place Walls (interior face-#11 & smaller)------- 3/4"
    Tilt-Up Walls------------------------------- see details
    Slabs (on forms)---------------------------- 3/4"
    Slabs (on ground)-------------------- 2" clear from top uno
11. Splices in continuous reinforcement shall be lapped uno, see schedule this sheet. Splices in adjacent bars shall be greater than 5'-0" apart. Splice continuous bars in soil-bearing grade beams, structural slabs on grade and mat foundations as follows uno: top bars at centerline of support; bottom bars at mid-span. Splice continuous bars in elevated slabs and beams, etc. as follows uno: top bars at mid-span; bottom bars at centerline of support. All bars size #14 and larger shall be continuous for full length shown or spliced with mechanical couplers as noted in details. Splices in WWF shall be 1-1/2 meshes wide.
12. The minimum clear spacing between parallel bars in a layer shall not be less than the larger of bar diameter, 1", or 33% greater than the maximum aggregate size (nominal), whichever is greatest. This requirement also applies to the clear spacing between different layers of parallel bars and to the clear distance between a contact lap splice and adjacent splices or bars.
13. All hooks shall be standard hooks unless otherwise shown or noted. At walls, provide hooks at ends of all reinforcing at ends, corners and intersections, uno.
14. Construction joints shall be made rough and all laitance removed from the surface. Concrete may be roughened by chipping the entire surface, sand blasting, or raking the surface to provide 1/4" deep deformations.
15. Remove all debris from forms before casting any concrete.
16. Reinforcing, dowels, bolts, anchors, sleeves, etc. to be embedded in concrete shall be securely positioned before placing concrete.
17. Anchor bolts (AB's) cast in concrete or masonry for wall sill and ledger\applications shall be headed bolts with cut threads conforming to ASTM A307, uno. Refer to "Wood" notes for additional requirements for bolts in contact with pressure treated or fire retardant material. Refer to 'Structural Steel' note for requirements for anchor rods (AR's) cast in concrete for column base plate and steel embed applications.
18. Walls shall be cast in horizontal layers of 2'-0" maximum depth.
19. Concrete in walls, piers or columns shall set at least 2 hours before placing concrete in beams, spandrels, or slabs supported thereon.
20. Horizontal wall bars in multi-curtain cast in place walls shall be staggered.
21. Dowel all vertical reinforcing in walls and columns from foundation with same size bar.
22. Consolidate concrete placed in forms by mechanical vibrating equipment supplemented by hand-spading, rodding or tamping. Use equipment and procedures for consolidation of concrete in accordance with the recommended practices of ACI 309 to suit the type of concrete and project conditions. Concrete shall not be dropped through reinforcing steel (as in walls) so as to cause segregation of aggregates. In such cases hoppers and chutes or trunks of variable lengths shall be used so that the free unconfined fall of concrete shall not exceed 6 feet.
23. No wood spreaders allowed. No wood stakes allowed in areas to be concreted.
24. Additional reinforcing in precast or tilt-up panels required for lifting stresses shall be supplied by Contractor.
25. Provide #5 x 4'-0" diagonal reinforcing at top and bottom of slab at all re-entrant corners typical. This applies to slab on grade, concrete over metal deck, and elevated structural slab conditions.
26. All saw cutting shall be done after initial set has occurred to avoid tearing or damage by the saw blade, but before initial shrinkage has occurred.
27. Notify Structural Engineer a minimum of 48 hours before placing any concrete.
28. CONCRETE STRENGTHS & MIX PROPERTIES:

	item	f'c @ 28 days	max aggr. size	weight	max w/cm* ratio
a.	Slab on grade	3500 psi	1"	NW	0.45
b.	Site & Miscellaneous	2500 psi	1"	NW	0.60

* w/cm = Water : Cementitious material ratio

A / S-001 REINFORCEMENT LAP SPLICE SCHEDULE

300SN002-1

ACI 318 CBC/IBC

(All lengths shown are in inches.)

fc' = 3500 psi conc

Splice Class	Reinf Location	#3	#4	#5	#6	#7	#8	#9	#10	#11
B	Top	18	35	43	52	75	86	97	109	121
	Other	14	27	33	40	58	66	75	84	93

Notes:
1. Schedule applies to normal weight concrete with uncoated, Grade 60 reinforcing steel for #4 bars and larger (values for #3 bars based on Grade 40).
2. Top reinforcement is horizontal reinforcement located such that more than 12 inches of fresh concrete is cast in the member below the splice.
3. When lightweight concrete is used, multiply lap lengths by 1.30.
4. Where clear spacing of bars being spliced is less than 2 bar dia. OR where clear cover of bars being spliced is less than 1 bar dia., multiply lap lengths by 1.50, uno.
5. Where notes #3 AND #4 occur, multiply lap lengths by 2.00, uno.
6. Where Class A lap splice is noted in detail, divide lengths above by 1.30.

STRUCTURAL STEEL

500SN001-1

1. Fabrication, erection and materials shall conform with the AISC Specification for Structural Steel Buildings, the AISC Seismic Provisions for Structural Steel Buildings, and the International Building Code, latest editions.
2. Structural Steel wide flange shapes shall conform with ASTM A992. All other Structural Steel rolled shapes (channels, angles, etc) and plates shall conform with ASTM A36, uno.
3. Steel Pipe shall conform to ASTM A53, Types E or S, Grade B.
4. All Hollow Structural Sections (HSS) shall conform to ASTM A500, Grade B.
5. All structural steel shall receive a minimum of one shop coat of red primer paint. Do not paint areas to be field welded, fireproofed, galvanized, to receive slip-critical high strength bolts, or to be embedded in concrete. Provide additional painting as noted in the specifications.
6. All structural steel shall be erected plumb and true to line. Temporary bracing shall be installed and shall be left in place until other means are provided to adequately brace the structure. Contractor responsible for reviewing all base plate and support conditions during erection and bracing as required. See AISC and OSHA requirements.
7. Place non-shrink grout under all base plates before adding vertical load.
8. Structural steel below grade shall have 3 inches minimum of concrete cover.
9. Bolted connections shall consist of unfinished bolts conforming to ASTM A307 unless noted otherwise. Where high strength bolts are indicated, bolts conforming to ASTM A325 or ASTM A490 as needed shall be provided. Anchor rods cast in concrete or masonry shall be headed bolts with cut thread, full diameter body style conforming to ASTM F1554 gr. 36, 55 (weldable per S1 Supplementary Requirements), or 105 as indicated on drawings. All bolted connections and base plates shall have standard cut washers unless noted otherwise. Washers for base plates shall conform to ASTM F844 unless noted otherwise, and shall be placed at top and bottom of plate.
10. "Slip-critical" bolted connections:
    a. "Slip-critical" connections (A325SC design values with special inspection) are required at all braced frame connections, at all connections along chord lines and drag lines (as noted on plans), and uno, at all bolts in oversized or slotted holes.
    b. The special inspector must be present during installation and tightening operation of "slip-critical" connections.
11. Provide 1/2" diameter stitch bolts and ring fills, spaced at not more than 2'-0" on center for all double angle members.
12. At wood to steel parallel contact, bolt with 1/2" diameter bolts at maximum 24"cc.
13. Holes for unfinished bolts shall be of the same nominal diameter of the bolt plus 1/16". Use standard AISC gage and pitch for bolts except as noted otherwise.
14. Welding shall be done by the electric arc process in accordance with American Welding Society Standards, using only certified welders. All groove welds shall have complete penetration unless noted otherwise. All exposed welds shall be ground smooth. All electrodes for welding shall comply with AWS code, E70 series minimum.
15. Weld lengths called for on plans are the net effective lengths required.
16. Minimum fillet welds: 3/16" @ t < 1/2"
    1/4" @ t < 3/4"
    5/16" @ t > 3/4"
17. Welding Procedure Specifications (WPS) for shop and field prequalified weld joints and weld joints qualified by test shall be prepared for review prior to fabrication. All welding procedure items such as base metals, welding processes, filler metals and joint details that meet the requirements of AWS D1.1 Section 5.1 shall be considered as prequalified. Any change or substitution that is beyond the range or tolerance or requirements for prequalification shall be qualified by test per AWS D1.1 Section 5 part B. Qualification testing is required when the depth of a partial penetration or complete penetration weld is 2" or greater.
18. For nondestructive testing of welded connections excluding primary members of moment resisting frames:
    a. Welded connections shall be tested by nondestructive methods for compliance with AISC J2, and job specifications. Ultrasonic Testing shall be in accordance with AWS D1.1, ASTM E164 and ASME Section V. Radiography shall be in accordance with AWS D1.1, ASTM E94 and E99, and ASME Section V. This testing shall be part of the special inspection requirements of IBC Section 1704.3 performed by an approved independent testing laboratory as follows:
       1. Base metal thicker than 1 inch when subject to through thickness weld shrinkage strains.
       2. All complete joint penetration groove or butt welds.
       3. All partial joint penetration groove welds when used in column splices.
    b. Any material discontinuities shall be accepted or rejected on the basis of defect rating in accordance with the (larger reflector) criteria of AISC J2.

HOLLOW CONCRETE UNIT MASONRY (BLOCK)

410SN001-1

1. Concrete block units shall conform to ASTM C-90 . Compressive strength of units to be 1000 psi for gross area and 1900 psi for net area. F'm = 1500 psi. F'm shall be verified in accordance with section 2105.2.2.1.2 of the 2010 CBC. Concrete block units shall be lightweight, fully grouted concrete block units not to exceed 115 pcf.
2. Mortar shall be type S proportioned to attain a 28 day compressive strength of 1800 psi. Use a minimum of 1 part Portland cement to 1/4 - 1/2 part hydrated lime with sand at 2-1/2 to 3 times combined volume of cement and lime.
3. Grout shall be proportioned to attain a 28 day compressive strength of 2000 psi. Use a minimum of 1 part Portland cement to 3 parts sand. Add 1 lb. of Sika Grout Aid, or equal, per 100 lb. of cementitious material. 1 to 2 parts of pea gravel shall be used where the least clear cell dimension exceeds 2 inches. Not more than 5% of the pea gravel shall pass the No. 8 sieve and 100% shall pass the 3/8" sieve. When required, grout strength shall be verified in accordance with section 2105.2.2.1.2 of the 2010 CBC.
4. Reinforcing steel shall conform to ASTM A-615 Grade 60 for #4 and larger, Grade 40 for #3 and smaller.
5. Minimum rebar clearance to face shell is one bar diameter or 1/2", whichever is greater.
6. Before block is placed on concrete, thoroughly clean concrete of all laitance and all loose material. Roughen as in a concrete construction joint.
7. Concrete block masonry shall be built to preserve the unobstructed vertical continuity of the cells. All head and end joints shall be solidly filled with mortar for a distance in from the face of the wall or unit not less than the thickness of the longitudinal face shells. Bond shall be provided by lapping successive courses or by equivalent mechanical anchorage.
8. Vertical cells shall have vertical alignment sufficient to maintain a clear unobstructed continuous vertical cell.
9. Low-lift grouted construction shall conform to 2010 CBC Section 2104A.5.2.2. High-lift grouted construction shall conform to 2010 CBC Section 2104A.5.1.2.3.
10. Clean out openings shall be provided at the bottoms of all cells to be filled at each lift or pour of grout where such lift or pour of grout is in excess of 4'-0" in height. Any overhanging mortar or other obstruction or debris shall be removed from inside of such cells. The clean outs shall be sealed after inspection and before grouting. Mechanically vibrate all grout pours.
11. Vertical reinforcing shall be held in position at top and bottom and at intervals not to exceed 192 bar diameters.
12. Thoroughly clean all cells and bond beams of mortar before grouting.
13. All cells shall be filled solidly with grout. All grouting shall be done under the continuous observation of a qualified inspector where indicated on plans.
14. When grouting is stopped for one hour or longer, horizontal construction joints shall be formed by stopping the pour of grout 1-1/2" below the top of the uppermost unit.
15. Every vertical bar in walls shall be lapped per #22 below with a dowel of the same size extending from the foundation. Locate vertical reinforcing at centerline of wall unless shown or noted otherwise. Carry each dowel to within 3" of the bottom of the foundation and terminate with 90 degree hook. Dowels shall be straight and plumb.
16. Place all horizontal bars in bond beam units. When 2 bars are used, stagger laps minimum of 5'-0".
17. Provide 2 - #5 bars with matching footing dowels (full height of wall at jambs and extending a minimum of 2'-0" past edges of openings at head and sill) each side of all openings and each end of all walls, unless noted otherwise on drawings.
18. All embedded items (bolts, straps, etc.) shall be secured in place prior to grouting. Cut a hole in the face shell to attain a minimum of 1" grout all around embedded items.
19. Single conduits (3/4" max) may be placed in vertical cells not containing vert. rebar. No horizontal conduits allowed in wall construction.
20. Anchor bolts cast in masonry shall be headed bolts with cut threads conforming to ASTM A307, ASTM A36, or ASTM F/554 as indicated on drawings. Bent bar anchor bolts shall not be permitted.
21. Use open end block for all stack bond construction.
22. All rebar shall be lap spliced as follows (uno):

Bar Type	Lap Length	Notes
Vertical bars	48d	Splices for multiple bars in the same
Horizontal bars	48d	cell must be stgrd 24" or lapped 62d
Jamb bars	72d	Splices for multiple bars in the same
Chord bars/Drag Bars	72d	cell must be stgrd 24" or lapped 94d
Vertical bars @ ends & corners	72d	

a. where epoxy coated rebar is used, multiply lap lengths by 1.50.
b. at retaining wall conditions, vertical reinforcing to have 72d lap typ.

DRILLED-IN ANCHORS

305SN001-1

1. For concrete construction, epoxy anchors shall be Hilti HIT-HY 200 per ESR-3013, Hilti HIT-RE500-SD per ESR-2322, Simpson SET-XP per ESR-2508, or Powers Pure 110 per ESR-3298 for thr'd rod & rebar. Expansion anchors shall be Hilti KB-TZ per ESR-1917, Simpson Strong-Bolt 2 per ESR-3037, or Powers Power-Stud+ SD2 per ESR-2502. Screw anchors shall be Hilti KWIK HUS-EZ (KH-EZ) per ESR-3027, Simpson Titen HD per ESR-2713, or Powers Wedgebolt+ per ESR-2526.
2. For masonry construction, epoxy anchors shall be Hilti HIT HY 150 MAX per ESR-1967, Simpson SET per ESR-1772, or Powers T308+ per ESR-3149 for thrd'd rod & rebar. Expansion anchors shall be Hilti Kwik Bolt 3 (KB3) per ESR-1385, Simpson Wedge-All per ESR-1396, or Powers Power-Stud+ per ESR-2966. Screw anchors shall be Hilti HUS-H per ESR-2369, Simpson Titen HD per ESR-1056, or Powers Wedgebolt+ per ESR-1678.
3. Anchor type, size & embedment shall be indicated in drawings. Post-installed anchors for repair shall be evaluated on a case by case basis. Notify Structural Engineer for repairs.
4. Anchors shall be installed in accordance with the requirements given in the ICC report.
5. Unless noted otherwise anchors have been designed for special inspection. Provide Special Inspection as indicated in the ICC report.
6. When installing drilled-in anchors in existing concrete or masonry, use care and caution to avoid cutting or damaging existing reinforcing bars. Do not install anchors in prestressed concrete elements.
7. Anchors installed from the bottom into metal deck with concrete shall be installed in the center of the low flute of the decking unless noted otherwise in ICC report. The decking shall have a minimum thickness of 20 gauge. The minimum thickness of the concrete above the high flute of the metal deck shall be as indicated in the ICC report. See ICC report for additional requirements, including minimum dimensions for flute width and depth.
8. Adhesive anchors shall be installed in concrete having a minimum age of 21 days at the time of anchor installation per ACI 318, appendix D.
9. Installer certification and inspection is required for horizontal and upwardly inclined adhesive anchors subjected to sustained tension loading in accordance with ACI 318, appendix D.
10. The inspection of the anchors shall be done by a qualified inspection agency and a report of the inspection results shall be submitted to the governing agency and Architect/Structural Engineer.

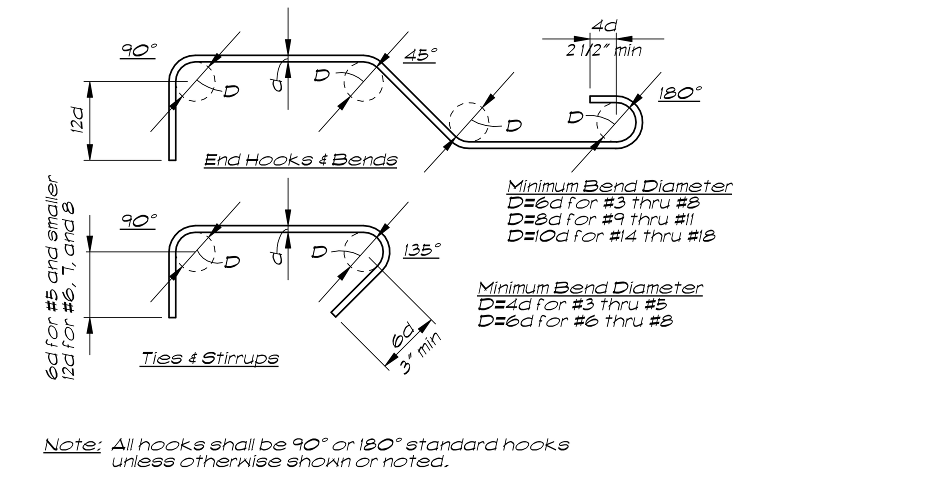

Note: All hooks shall be 90° or 180° standard hooks unless otherwise shown or noted.

Standard Rebar Hooks and Bends 1 / S-001

300SD001-12

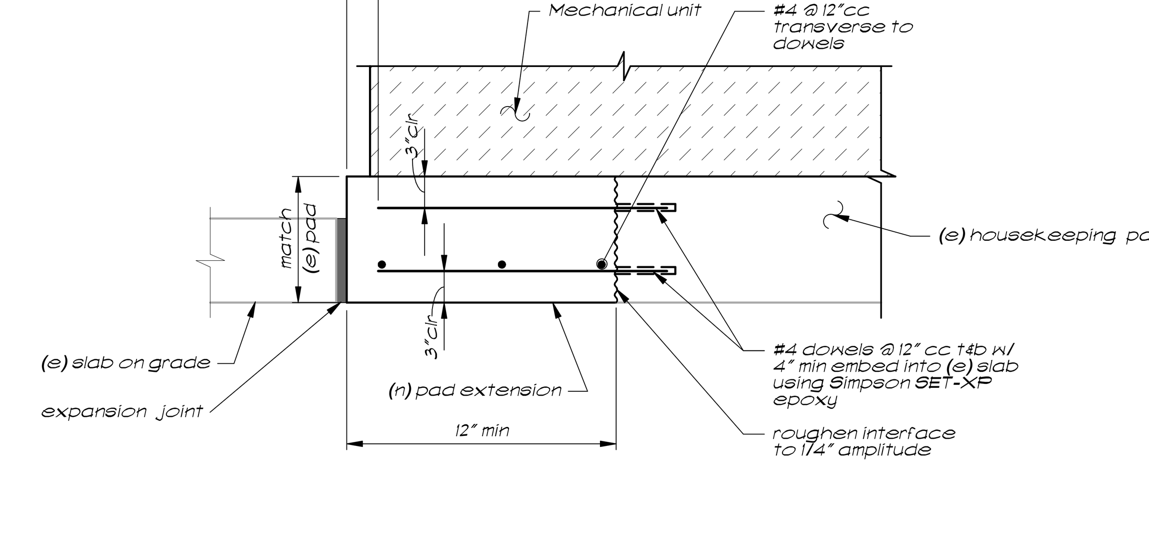

Detail 2 / S-001 — 1" = 1'-0"

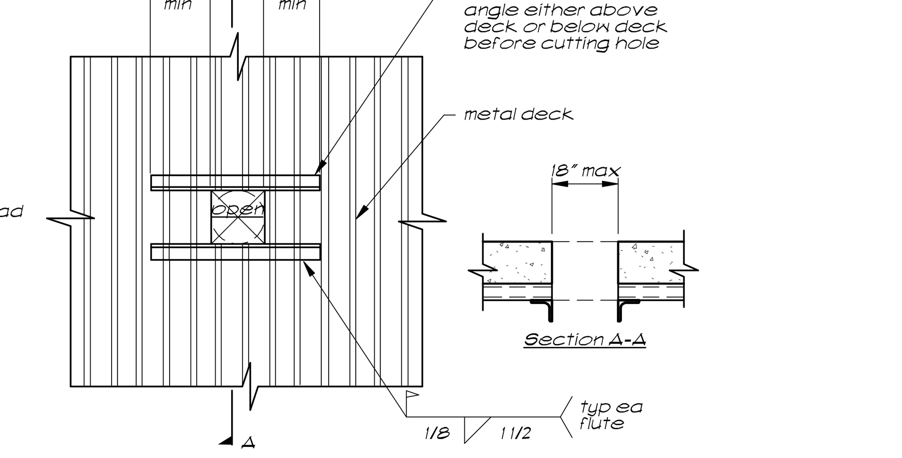

Note: Applies at holes from 6" to 18" wide in metal deck without concrete

Detail 3 / S-001

Structural Sheet Index	
T02-S-101	Foundation & Roof Framing Plans
S-001	General Notes & Typical Details
S-501	Details

CONSULTANTS:

Buehler & Buehler Structural Engineers, Inc.

ARCHITECT/ENGINEERS:

Hilliard ARCHITECTS
251 Post Street, Suite 620
San Francisco, CA 94108
Tel 415 989 6400
www.HilliardArchitects.com

Revisions: | Date

Drawing Title: General Notes & Typical Details

Approved: Project Director

Project Title: Install New High Efficiency Water Cooled Chiller (Bid Package No 1)

Location: VANCHCS; MATHER, CA

Date: 7.11.2014 | Checked: JDH | Drawn: SMS

Project Number: 612A4-14-006

Building Number: 701,702,703

Drawing Number: S-001

Dwg. of

Office of Construction and Facilities Management

Department of Veterans Affairs

HILLIARD ARCHITECTS INC. COPYRIGHT

7/8/2014 1:19:48 PM

VA FORM 08-6231

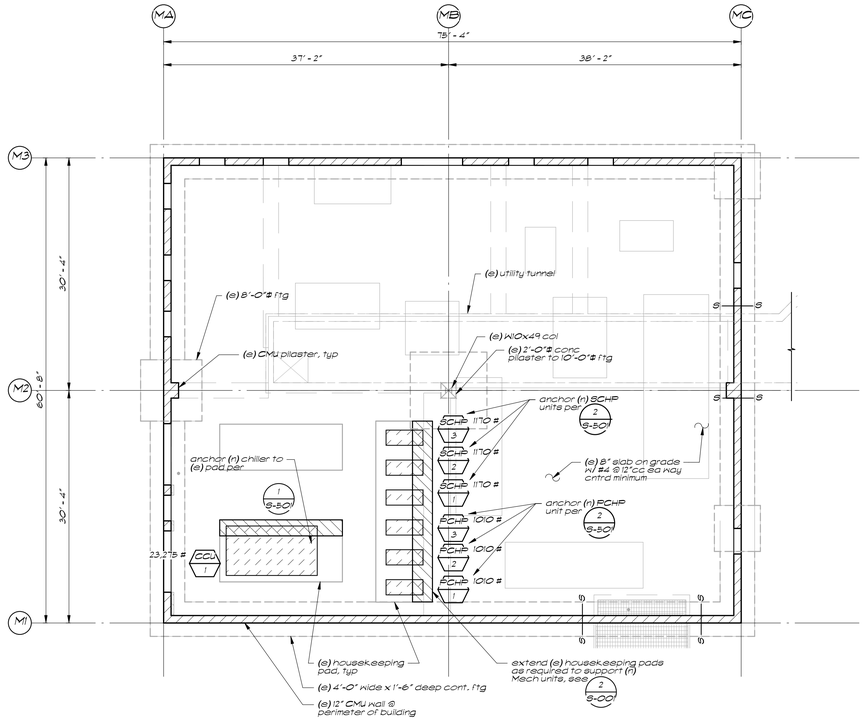

Foundation Plan — 1/8" = 1'-0"
Building 702

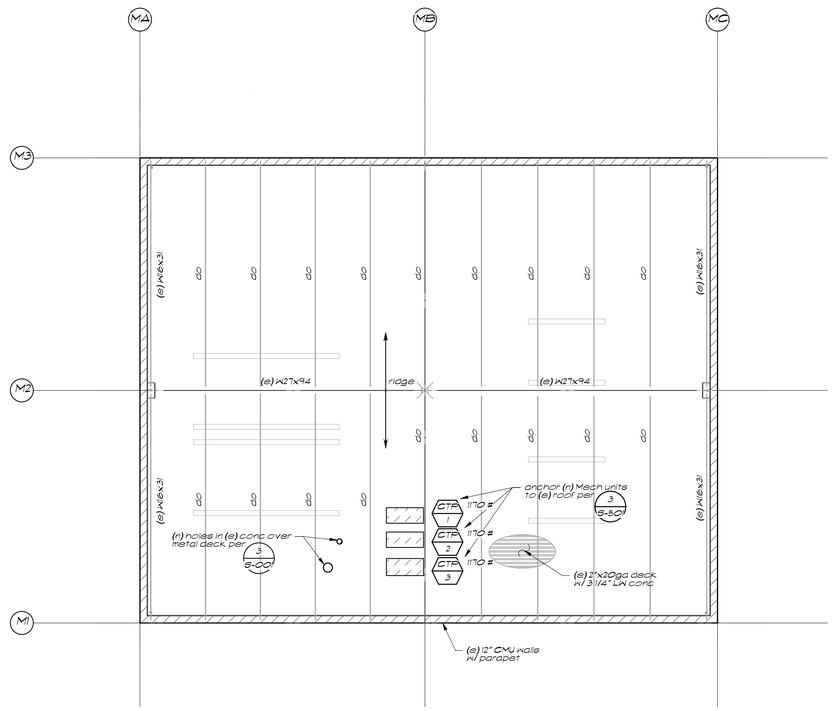

Roof Framing Plan — 1/8" = 1'-0"
Building 702

HILLIARD ARCHITECTS INC. COPYRIGHT

7/9/2014 1:19:47 PM

Revisions:	Date

CONSULTANTS:

Buehler & Buehler Structural Engineers, Inc.
5 Third Street, Suite 1125, San Francisco, CA 94103
tel 415.495.1635 fax 415.495.1639
Sacramento . Phoenix . San Francisco

REGISTERED PROFESSIONAL ENGINEER JOHN D. HARVEY No. 14600 STRUCTURAL STATE OF CALIFORNIA

ARCHITECT/ENGINEERS:

Hilliard ARCHITECTS
251 Post Street, Suite 620
San Francisco, CA 94108
Tel 415 989 6400
www.HilliardArchitects.com

Drawing Title: **Foundation& Roof Framing Plans**

Approved: Project Director

Project Title: **Install New High Efficiency Water Cooled Chiller (Bid Package No 1)**

Location: VANCHCS; MATHER, CA

Date: 7.11.2014 | Checked: Checker | Drawn: Author

Project Number: 612A4-14-006

Building Number: 701,702,703

Drawing Number: 702-S-101

Dwg. of

Office of Construction and Facilities Management

Department of Veterans Affairs

VA FORM 08-6231

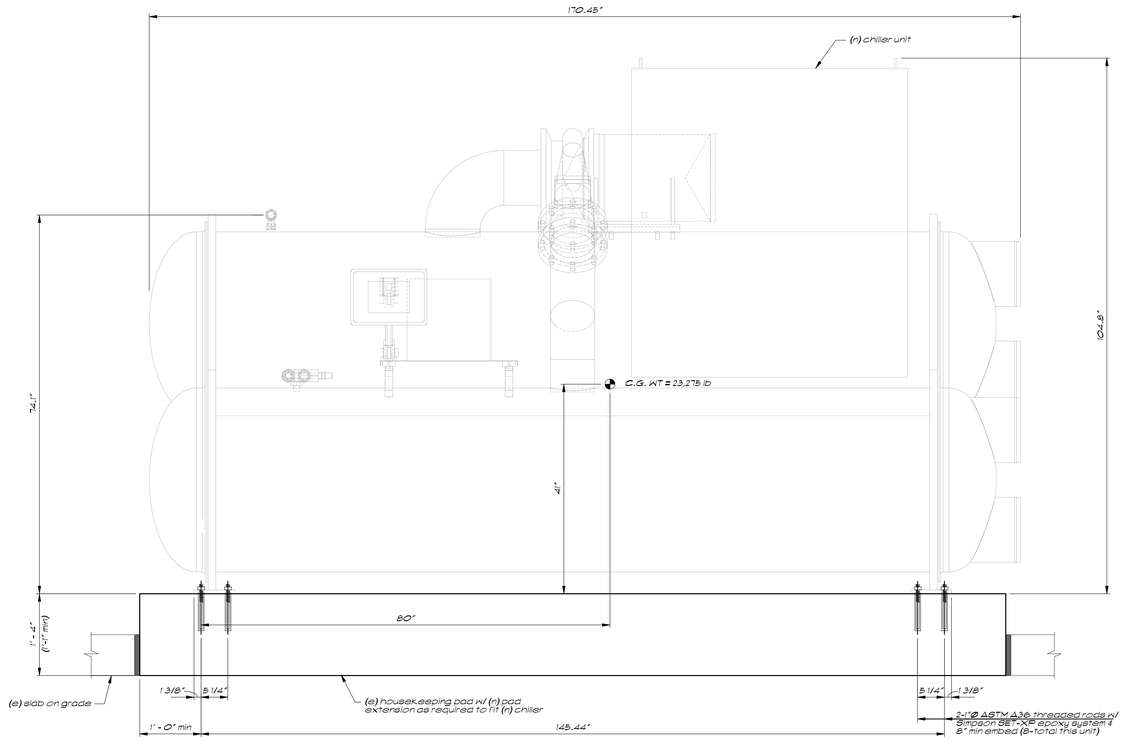

Front Elevation

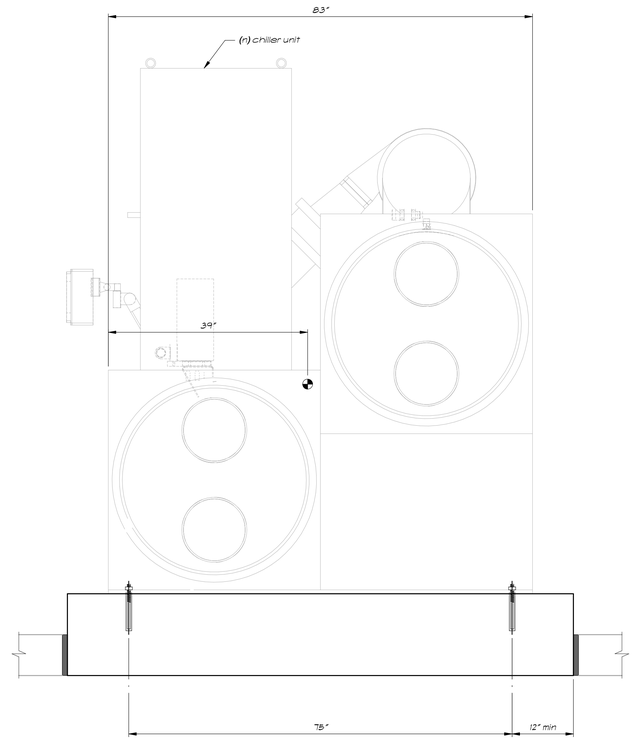

Side Elevation

Chiller Unit

Detail 1/S-50 — 1" = 1'-0"

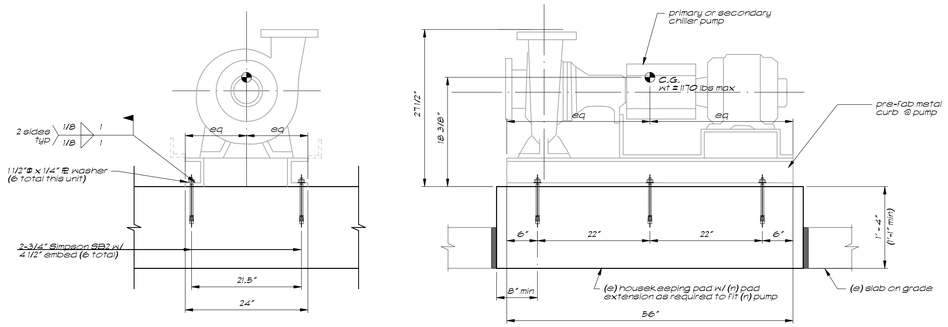

Side Elevation

Front Elevation

Primary or Secondary Chiller Pump

Detail 2/S-50

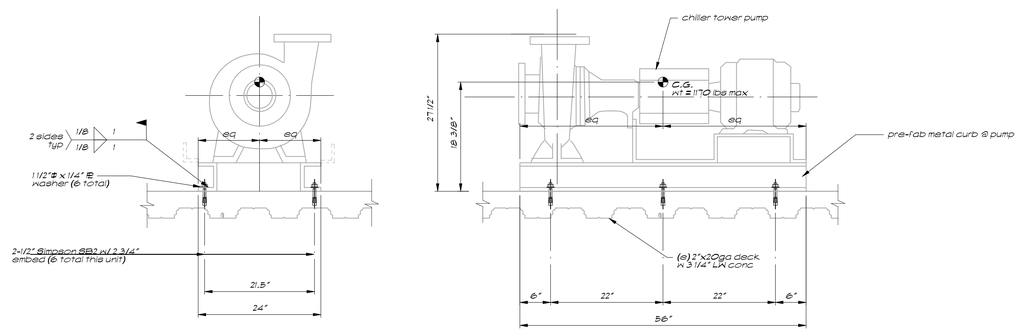

Side Elevation

Front Elevation

Chiller Tower Pumps

Detail 3/S-50

HILLIARD ARCHITECTS INC. COPYRIGHT

7/9/2014 1:19:48 PM

Revisions:	Date

CONSULTANTS:

Buehler & Buehler Structural Engineers, Inc.
5 Third Street, Suite 1125, San Francisco, CA 94103
tel 415.495.1635 fax 415.495.1639
Sacramento . Phoenix . San Francisco

REGISTERED PROFESSIONAL ENGINEER JOHN D. HARVEY No. 4600 STRUCTURAL STATE OF CALIFORNIA

ARCHITECT/ENGINEERS:

Hilliard ARCHITECTS
251 Post Street, Suite 620
San Francisco, CA 94108
Tel 415 989 6400
www.HilliardArchitects.com

Drawing Title	Details
Approved: Project Director	
Project Title	Install New High Efficiency Water Cooled Chiller (Bid Package No 1)
Location	VANCHCS; MATHER, CA
Date	7.11.2014
Checked	Checker
Drawn	Author
Project Number	612A4-14-006
Building Number	701,702,703
Drawing Number	S-501
Dwg.	of

Office of Construction and Facilities Management

Department of Veterans Affairs

VA FORM 08-6231

MECHANICAL LEGEND, SYMBOLS AND ABBREVIATIONS

MECHANICAL ABBREVIATIONS

A/E	ARCHITECT / ENGINEER
AAV	AUTOMATIC AIR VENT
ACCH	AIR COOLED CHILLER
ACD	AUTOMATIC CONTROL DAMPER,MODULATING
ACD-TP	AUTOMATIC CONTROL DAMPER,TWO POSITION
AD	ACCESS DOOR
AFF	ABOVE FINISHED FLOOR
AHU	AIR-HANDLING UNIT
AMP	AMPERGE
AP	ACCESS PANEL
APD	AIR PRESSURE DROP
ARI	AIR CONDITIONING AND REFRIGERATION INSTITUTE
AS	AIR SEPARATOR
BDD	BACKDRAFT DAMPER
BFP	BACKFLOW PREVENTER
BHP	BRAKE HORSEPOWER
BTU	BRITISH THERMAL UNIT
BTUH	BRITISH THERMAL UNIT PER HOUR
CENT	CENTRIFICAL
CFH	CUBIC FEET PER HOUR
CFM	CUBIC FEET PER MINUTE
CFT	CUBIC FEET
CFP	CHEMICAL FEED PUMP
CH	CHILLER
CHP	CHILLED WATER PUMP
PCHP	PRIMARY CHILLED WATER PUMP
SCHP	SECONDARY CHILLED WATER PUMP
CHW	CHILLER WATER
CHR	CHILLED WATER RETURN
CHS	CHILLED WATER SUPPLY
CI	CAST IRON
CM	CUBIC METER
CM/S	CUBIC METER PER SECOND
CO	CLEAN OUT
COP	COEFFICIENT OF PERFORMANCE
CT	COOLING TOWER
CW	COLD WATER (POTABLE)
CWCC	CHILLED WATER COOLING COIL
CWP	CONDENSER WATER PUMP
CWR	CONDENSER WATER RETURN (TO COOLING TOWER)
CWS	CONDENSER WATER SUPPLY (FROM COOLING TOWER)
C	CENTIGRADE (CELCIUS)
CC	COOLING COIL
CCD	COOLING COIL CONDENSATE DRAIN
EA	EXHAUST AIR
ECC	ENGINEERING CONTROL CENTER
EDH	ELECTRIC DUCT HEATER
EER	ENERGY EFFICIENCY RATIO
EF	EXHAUST FAN
EG	EXHAUST GRILLE
ENT	ENTERING
ESP	EXTERNAL STATIC PRESSURE
ET	EXPANSION TANK
EWT	ENTERING WATER TEMPERATURE
EX.	EXISTING
F	FAHRENHEIT
FD	FLOOR DRAIN
FD	FIRE DAMPER
FF	FINAL FILTER
FHX	FLUE GAS/FEEDWATER HEAT EXCHANGER
FPM	FEET PER MINUTE
FPS	FEET PER SECOND
FS	FLOW SWITCH
GA	GAUGE
GAL	GALLONS
GPD	GALLONS PER DAY
GPH	GALLONS PER HOUR
GPM	GALLONS PER MINUTE
GS	GALVANIZED STEEL
HB	HOSE BIBB
HD	HEAD
HOA	HAND/OFF/AUTOMATIC
HP	HEAT PUMP
HP	HORSEPOWER
HVD	HOISTWAY VENT DAMPER
HX	HEAT EXCHANGER
HZ	HERTZ
W	WATTS
WCCH	WATER COOLED CHILLER
WCHP	WATER COOLED HEAT PUMPS
WF	WATER FILTER
WFCV	WATER FLOW CONTROL VALVE
WFM	WATER FLOWMETER
WFMD	WATER FLOW MEASURING DEVICE
WG	WATER GAGE
WPD	WATER SIDE PRESSURE DROP
YR	YEAR

'	FEET
"	INCH
@	AT
Ø	DIAMETER
(SAD)	SEE ARCHITECTURAL DRAWINGS
(SED)	SEE ELECTRICAL DRAWINGS
(SCD)	SEE CIVIL DRAWINGS
(SPD)	SEE PLUMBING DRAWINGS
(SSD)	SEE STRUCTURAL DRAWINGS

PIPING SYSTEMS

CHS	CHILLED WATER SUPPLY
CHR	CHILLED WATER RETURN
CHSR	CHILLED WATER SUPPLY/RETURN
SGCHS	SURGERY CHILLED WATER SUPPLY
SGCHR	SURGERY CHILLED WATER RETURN
SGCHS/R	SURGERY CHILLED WATER SUPPLY/RETURN
CWS	CONDENSER WATER SUPPLY
CWR	CONDENSER WATER RETURN
CWS/R	CONDENSER WATER SUPPLY/RETURN
V	VENT
SCW	SOFTENED COLD WATER
CHEM	CHEMICAL TREATMENT FEED LINE
CW	COLD WATER

CONTROLS

- TEMPERATURE SENSOR
- THERMOSTAT
- FLOW SENSOR
- EMERGENCY POWER OFF SWITCH
- PRESSURE SENSOR
- OXYGEN SENSOR
- HORN
- STROBE

VALVES

- BUTTERFLY VALVE
- GATE VALVE - THREADED/FLANGED
- GLOBE VALVE- THREADED/FLANGED
- BALL VALVE
- SHUTOFF VALVE (BUTTERFLY VALVE FOR 3" AND LARGER. BALL VALVE FOR 2 1/2" AND SMALLER)
- GAUGE VALVE (BALL TYPE)
- BALANCING VALVE
- SPRING CHECK VALVE
- SWING CHECK VALVE
- 2-WAY SOLENOID VALVE (XX)
- 2-WAY CONTROL VALVE (VALVE BODY AS SPECIFIED) (XX)
- 3-WAY MIXING VALVE WITH ARROW INDICATING FAIL POSITION
- DRAIN VALVE
- DRAIN VALVE WITH CAP
- REDUCED PRESSURE BACKFLOW PREVENTER (RPBP)
- PRESSURE RELIEF VALVE(RV) OR SAFETY VALVE (SV)
- VACUUM RELIEF/VACUUM BREAKER
- FLOAT OPERATED VALVE
- FCV — FLOW CONTROL VALVE
- 3-WAY DIVERTING VALVE WITH ARROW INDICATING FAIL POSITION

(XX) DEFINES FAIL POSITION OR NORMAL POSITION.
FC = FAIL CLOSED (CONTROL VALVE OR DAMPER)
FO = FAIL OPEN (CONTROL VALVE OR DAMPER)
NC = NORMALLY CLOSED (CONTROL VALVE OR DAMPER)
NO = NORMALLY OPEN (CONTROL VALVE OR DAMPER)

PIPING SPECIALITIES

- WATER SYSTEM PIPELINE STRAINER WITH 3/4" BRASS HOSE ADAPTOR AND PIPE
- WYE STRAINER (WITH BALL VALVE & HOSE CONNECTION
- SUCTION DIFFUSER WITH STRAINER AND DRAIN
- DUPLEX STRAINER
- BASKET STRAINER
- FLANGE
- UNION
- 2" AND SMALLER, CAP OR PLUG 2 1/2" AND LARGER, BLIND FLANGE
- PIPE FLEXIBLE CONNECTION
- SHOCK SUPPRESSOR (WITH BALL VALVE)
- RISE OR DROP IN PIPE
- THERMOMETER
- PRESSURE GAUGE (WITH BALL VALVE)
- FLOW SENSOR
- FLOW SWITCH
- AUTOMATIC AIR VENT (WITH BALL VALVE)
- MANUAL AIR VENT
- TEST PLUG (PRESSURE/TEMP.)
- CONCENTRIC OR ECCENTRIC REDUCER
- CONCENTRIC REDUCER
- ECCENTRIC REDUCER
- DIRECTION OF PITCH (DOWN)
- DIRECTION OF FLOW
- FM — FLOW METER

ACTUATORS

- MANUAL
- 2-POSITION
- MODULATING
- S — SOLENOID
- M — ELECTRIC MOTOR DRIVEN

PIPING

SINGLE / DOUBLE

- ELBOW DOWN
- ELBOW UP
- BOTTOM CONNECTION (45° OR 90°)
- TOP CONNECTION (45° OR 90°)
- 45° PIPE RISE(R) OR DROP(D)
- TEE (REFER TO SPECIFICATION FOR SIDE, TOP OR BOTTOM TEE) — N/A
- EXISTING PIPING TO REMAIN
- EXISTING PIPING TO BE REMOVED
- FLOW DIRECTION DESIGNATION
- LINE CONTINUATION BREAK

DUCTWORK SYMBOLS

- VANED ELBOW (PROVIDE ALL SQUARE OR RECTANGULAR ELBOWS WITH VANES EVEN IF SYMBOL IS MISSING)
- VANED ELBOW (SHORT RADIUS)
- STANDARD RADIUS ELBOW (LONG RADIUS)
- 10x8 — NEW DUCT (INSIDE DIMENSIONS: WIDTH x DEPTH)
- EXISTING DUCT TO REMAIN
- EXISTING DUCT TO BE REMOVED
- LIMIT OF DEMOLITION

SPECIAL DESIGNATION

- CH 1 — EQUIPMENT (CHILLER INDICATED)
- A/15B-6 OR 6/15B-6 — DETAIL REFERENCE (TOP= DETAIL NO., BOTTOM=SHEET NO. IN DETAIL MANUAL)
- PLAN CONTINUATION REFERENCE
- X / XXX — DETAIL REFERENCE (TOP=DETAIL NO., BOTTOM=DRAWING NO. SHOWN ON)
- X — REVISION REFERENCE
- X — GENERAL OR SPECIAL NOTES REFERENCE
- ALTERNATE BOUNDARY
- MATCH LINE
- SCOPE OF WORK
- PACKAGED EQUIPMENT

MISCELLANEOUS

- POINT OF NEW CONNECTION TO EXISTING
- POINT OF DISCONNECTION TO EXISTING
- VIBRATION ISOLATOR
- ELEVATION MARKER

PROJECT DESCRIPTION

REPLACE 430 TON CHILLER NO. 1 WITH NEW 700 TON HIGH EFFICIENCY CHILLER. INCREASE SIZE OF PRIMARY CHILLED WATER AND CONDENSER WATER LOOP PUMPS AND PIPING TO ACCOMMODATE LARGER 700 TON CHILLER NO. 1 FLOW RATES AND FUTURE 700 TON REPLACEMENT OF CHILLER NO. 2. INCREASE SIZE OF SECONDARY CHILLED WATER PUMPS AND PIPING TO ACCOMMODATE FUTURE INCREASE IN CHILLED WATER DEMAND. ACCOMPLISH SCOPE OF WORK WITHOUT MAJOR OUTAGE OF CHILLED WATER SERVICES (SEE PHASING NOTES BELOW).

DEDUCTIVE ALTERNATES

DEDUCTIVE ALTERNATE NO. 1: COOLING TOWER EQUALIZER AND SWEEPER PIPING
DO NOT INSTALL COOLING TOWER EQUALIZER HEADER IN THE CHILLER ROOM SHOWN ON SHEET 702-MH-141. DO NOT INSTALL THE COOLING TOWER EQUALIZER BRANCH FOR EACH COOLING TOWER BETWEEN THE COOLING TOWER ISOLATION VALVE ON ROOF LEVEL (SHEET 702-MH-142) AND THE COOLING TOWER EQUALIZER HEADER. INSTALL A BLIND FLANGE ON THE COOLING TOWER ISOLATION VALVE INSTEAD. DO NOT INSTALL ASSOCIATED PIPE SUPPORT AND SEISMIC BRACING, ROOF PENETRATIONS, OR WALL PENETRATIONS.

DEDUCTIVE ALTERNATE NO. 2:
DO NOT DEMOLISH SECONDARY CHILLED WATER PUMPS SCHP-1, 2, 3 SHOWN ON SHEET 702-MD-121. DO NOT INSTALL SECONDARY CHILLED WATER PUMPS SCHP-1, 2, 3 SHOWN ON SHEET 702-MH-121. INSTALL NEW 10" CHS PUMP DROPS (TYP 3) AND CONNECT TO SECONDARY CHILLED WATER PUMPS. DO NOT INSTALL NEW 14"CHS SECONDARY CHILLED WATER SUPPLY HEADER SHOWN ON SHEET 702-MH-121. DO NOT DEMOLISH EXISTING 10"CHS SECONDARY CHILLED WATER SUPPLY HEADER AND BRANCHES TO BUILDING DISTRIBUTION SHOWN ON SHEET 702-MD-131. DO NOT PROVIDE TEMPORARY HOSE FOR PHASING SECONDARY BRANCHES SHOWN ON SHEET 702-MD-131. DO NOT ISOLATE BUILDINGS, DEMOLISH PIPE SEGMENTS AND INSTALL PHASING VALVES FOR BRANCHES TO BUILDING DISTRIBUTION SHOWN ON SHEETS 702-MD-101 AND 702-MH-101. DO NOT INSTALL NEW CONNECTIONS BETWEEN NEW SECONDARY CHILLED WATER SUPPLY HEADER AND BRANCHES TO BUILDING DISTRIBUTION SHOWN ON 702-MH-131.

DEDUCTIVE ALTERNATE NO. 3
DO NOT DEMOLISH PRIMARY CHILLED WATER PUMPS PCHP-2, 3 SHOWN ON SHEETS 702-MD-111 AND 702-MD-121. DO NOT INSTALL PRIMARY CHILLED WATER PUMPS PCHP-2, 3 SHOWN ON SHEETS 702-MH-111 AND 702-MH-121. DO NOT DEMOLISH CONDENSER WATER PUMPS CTP-2,3 SHOWN ON SHEETS 702-MD-112 AND 702-MD-122. DO NOT INSTALL NEW CONDENSER WATER PUMPS CTP-2,3 SHOWN ON SHEETS 702-MH-112 AND 702-MH-122.

GENERAL NOTES

1. THE FIRST FIGURE OF DUCT SIZE INDICATES DIMENSION OF FACE SHOWN OR INDICATED. DUCT SIZES ARE NET INSIDE DIMENSIONS.
2. FOR TYPICAL WATER PIPING CONNECTIONS TO EQUIPMENT, SEE STANDARD EQUIPMENT DETAILS.
3. SEISMIC PROVISIONS REQUIRED - SEE SPECS.
4. ALL PRESSURES LISTED ARE GAGE PRESSURE UNLESS OTHERWISE NOTED
5. NOTES SHOWN ON INDIVIDUAL SHEETS ARE DESIGNATED WITH A DIAMOND SURROUNDING THE NOTE NUMBER (SHEET NOTE) OR WITHOUT THE DIAMOND (GENERAL NOTE). WITH THE DIAMOND, THE NOTE APPLIES TO A SPECIFIC LOCATION ON THE SHEET AND WITHOUT THE DIAMOND, THE NOTE APPLIES TO THE ENTIRE SHEET.
6. WORK SHOWN WITHIN THE MATCH LINES OF EACH SHEET PERTAINS TO THOSE PARTICULAR SHEETS, UNLESS OTHERWISE NOTED. FOR WORK SHOWN BEYOND THE MATCH LINES ON EACH SHEET, REFER TO OTHER SHEETS.
7. DARK LINEWORK INDICATES NEW CONSTRUCTION, LIGHTER LINEWORK INDICATES EXISTING WORK TO REMAIN.
8. ALL ELEVATIONS NOTED ARE RELATIVE TO FINISHED FLOOR ELEVATION.
9. VERIFY ALL EQUIPMENT CONNECTIONS WITH MANUFACTURER'S CERTIFIED DRAWINGS. PROVIDE TRANSITIONS FOR FINAL CONNECTION TO EQUIPMENT. FIELD VERIFY ALL DIMENSIONS PRIOR TO FABRICATION OF WORK.
10. PROVIDE 3/8" BLOW-OFF VALVE AND 1/2" TO HOSE THREAD ADAPTER ON ALL STRAINERS.
11. PROVIDE UNIONS OR FLANGES ON EACH SIDE OF CONTROL VALVES. EVERY PIPING ASSEMBLY SHALL BE MADE SO AS TO MAKE EVERY VALVE AND PIECE OF EQUIPMENT EASILY REMOVABLE.
12. PROVIDE 1" AIR GAP AT ALL DRAIN CONNECTIONS.
13. MAINTAIN EXISTING UTILITY SERVICES FOR MEDICAL CENTER, SUCH AS ELECTRICITY, HEATING WATER, AND CHILLED WATER AT ALL TIMES. PROVIDE TEMPORARY FACILITIES, LABOR, MATERIALS, EQUIPMENT, CONNECTIONS, AND UTILITIES TO ASSURE UNINTERRUPTED SERVICES. WHERE NECESSARY TO CUT EXISTING WATER, CONDUITS, WIRES, CABLES, ETC. OF UTILITY SERVICES, THEY SHALL BE CUT AND CAPPED AT SUITABLE PLACES WHERE SHOWN. NO UTILITY SERVICE MAY BE INTERRUPTED WITHOUT PRIOR APPROVAL OF RESIDENT ENGINEER. CONTRACTOR SHALL SUBMIT A REQUEST TO INTERRUPT SERVICES TO RESIDENT ENGINEER, IN WRITING, 48 HOURS IN ADVANCE OF PROPOSED INTERRUPTION. REQUEST SHALL STATE REASON, DATE, EXACT TIME OF, AND APPROXIMATE DURATION OF SUCH INTERRUPTION. CONTRACTOR WILL BE ADVISED OF APPROVAL OF REQUEST, OR OF WHICH OTHER DATE AND/OR TIME SUCH INTERRUPTION WILL CAUSE LEAST INCONVENIENCE TO OPERATIONS OF MEDICAL CENTER. INTERRUPTION TIME APPROVED BY MEDICAL CENTER MAY OCCUR AT OTHER THAN CONTRACTOR'S NORMAL WORKING HOURS. MAJOR INTERRUPTIONS OF ANY SYSTEM MUST BE REQUESTED, IN WRITING, AT LEAST 15 CALENDAR DAYS PRIOR TO THE DESIRED TIME AND SHALL BE PERFORMED AS DIRECTED BY THE RESIDENT ENGINEER. THE CENTRAL ENERGY CENTER CHILLED WATER CAPACITY SHALL BE 700 TON MINIMUM FROM OCTOBER THROUGH MARCH AND 1290 TON MINIMUM FROM APRIL THROUGH SEPTEMBER UNLESS A MAJOR INTERRUPTION OF SYSTEM IS APPROVED BY RESIDENT ENGINEER. SUCH INTERRUPTIONS MAY BE DURING WEEKENDS OR HOLIDAYS AND LIMITED IN DURATION. IN ORDER TO MINIMIZE DISRUPTIONS TO SYSTEM, WORK SHALL BE PERFORMED IN PHASES AS SHOWN ON THE DRAWINGS AND DESCRIBED BELOW:

PHASE 0: MAKE-READY; PRIOR TO REMOVING CHILLER 1 FROM SERVICE, DISABLE CHILLERS 2 AND 3 ONE AT A TIME AND ADD PHASING VALVES IN THE CHILLED AND CONDENSER WATER PIPING TO FACILITATE FUTURE SWITCHOVER.

PHASE 1: REMOVE CHILLER 1 AND ASSOCIATED PUMPS AND PIPING. INSTALL NEW CHILLER 1, PUMPS, PIPING, CHILLED WATER RETURN HEADER, AND CONDENSER WATER SUPPLY HEADER.

PHASE 2: SWITCHOVER CHILLERS 2 AND 3 AND BUILDING DISTRIBUTION LOOPS TO NEW RETURN HEADER (SCHEDULE INTERRUPTIONS PER PARAGRAPH ABOVE). INSTALL NEW CHILLED WATER SUPPLY HEADER AND SECONDARY CHILLED WATER PUMPS.

PHASE 3: COORDINATE WITH OWNER MEANS FOR TEMPORARY COOLING. PROVIDE TEMPORARY CONNECTIONS TO SUPPLY BUILDING WITH PRIMARY CHILLED WATER PUMPS IN BLDG 703. SWITCHOVER SECONDARY CHILLED WATER PUMPS AND BUILDING DISTRIBUTION LOOPS TO NEW CHILLED WATER SUPPLY HEADER.

PHASE 4: COORDINATE WITH OWNER MEANS FOR TEMPORARY COOLING. DISABLE COOLING TOWER 1 AND 2, REMOVE EXISTING CONDENSER WATER PIPING AND INSTALL NEW CONDENSER WATER RETURN HEADER AND CONDENSER WATER PUMP SUCTION HEADER.

APPLICABLE CODES AND ORDINANCES

2013 CALIFORNIA BUILDING CODE-PART 2, TITLE 24, CCR
2013 CALIFORNIA MECHANICAL CODE-PART 4, TITLE 24, CCR
2013 CALIFORNIA ELECTRICAL CODE-PART 3, TITLE 24, CCR
2013 CALIFORNIA PLUMBING CODE-PART 5, TITLE 24, CCR
2013 CALIFORNIA FIRE CODE-PART 9, TITLE 24, CCR
US DEPARTMENT OF VETERANS AFFAIRS STANDARDS FOR CONSTRUCTION

7/10/2014 9:23:43 AM HILLIARD ARCHITECTS INC. COPYRIGHT

Revisions:	Date
CONFORMED CONST. DOCUMENTS	07.11.14
CONSTRUCTION DOCUMENTS	06.30.14
DESIGN DEVELOPMENT 2	06.13.14

VA FORM 08-6231

CONSULTANTS:
Affiliated Engineers
Affiliated Engineers W, Inc.
123 Mission Street, 7th Floor
San Francisco, California 94105
415.764.3700

ARCHITECT/ENGINEERS:
Hilliard ARCHITECTS
251 Post Street, Suite 620
San Francisco, CA 94108
Tel 415 989 6400
www.HilliardArchitects.com

Drawing Title: MECHANICAL LEGEND, SYMBOLS AND ABBREVIATIONS
Approved: Project Director
Project Title: Install New High Efficiency Water Cooled Chiller No. 1
Location: VANCHCS; MATHER, CA
Date: 7.11.2014
Checked: AEI
Drawn: AEI
Project Number: 612A4-14-006
Building Number: 702
Drawing Number: M-001
Dwg. of

Office of Construction and Facilities Management
Department of Veterans Affairs

1 MECHANICAL OVERALL SITE PLAN

1" = 50'-0"

Revisions:	Date
CONFORMED CONST. DOCUMENTS	07.11.14
CONSTRUCTION DOCUMENTS	06.30.14
DESIGN DEVELOPMENT 2	06.13.14

CONSULTANTS:

Affiliated Engineers W, Inc.
123 Mission Street, 7th Floor
San Francisco, California 94105
415.764.3700

ARCHITECT/ENGINEERS:

Hilliard ARCHITECTS
251 Post Street, Suite 620
San Francisco, CA 94108
Tel 415 989 6400
www.HilliardArchitects.com

Drawing Title: MECHANICAL OVERALL SITE PLAN

Approved: Project Director

Project Title: Install New High Efficiency Water Cooled Chiller No. 1

Location: VANCHCS; MATHER, CA

Date: 7.11.2014 | Checked: AEI | Drawn: AEI

Project Number: 612A4-14-006

Building Number: 702

Drawing Number: MS-101

Dwg. of

Office of Construction and Facilities Management

Department of Veterans Affairs

7/10/2014 9:24:59 AM HILLIARD ARCHITECTS INC. COPYRIGHT

VA FORM 08-6231

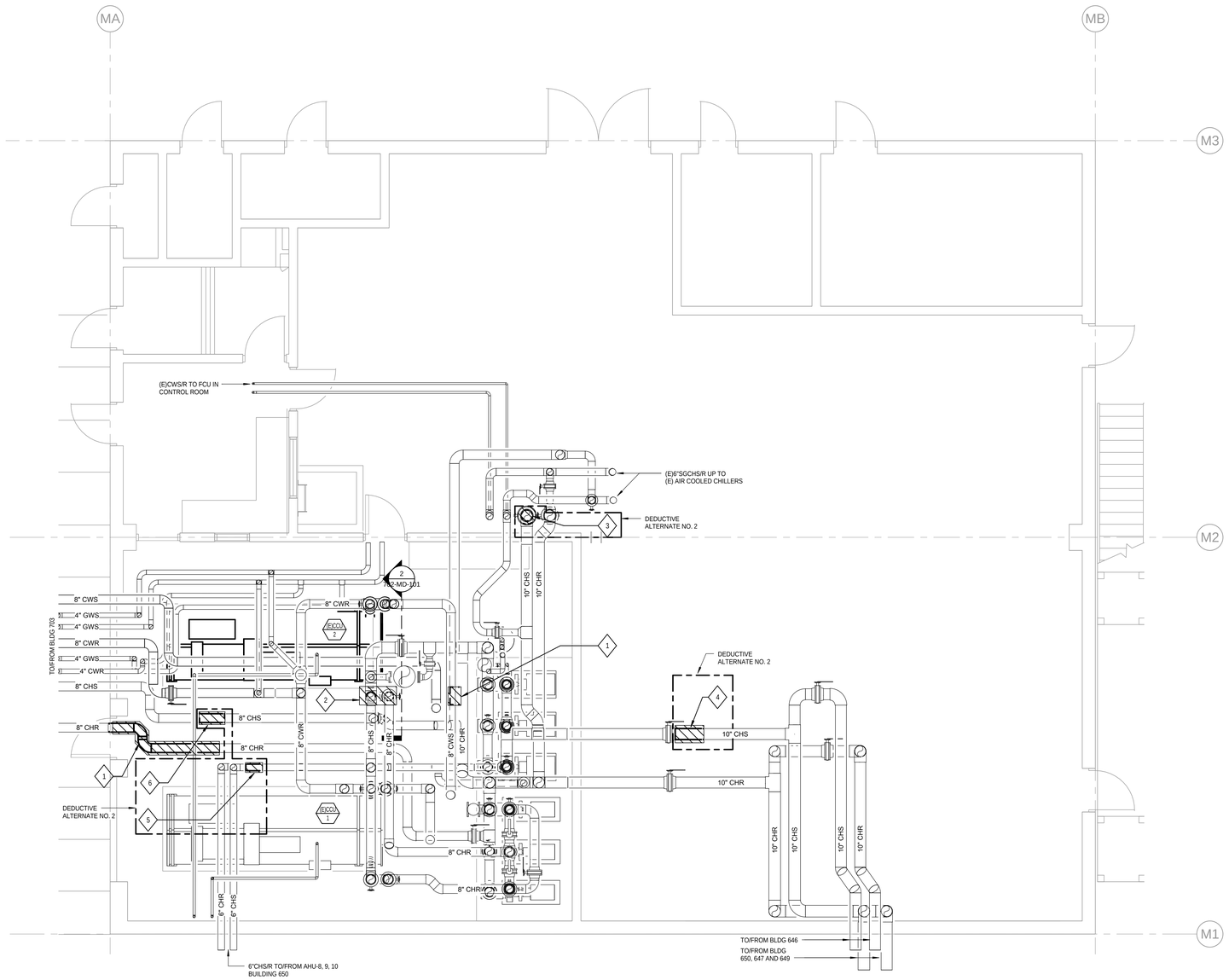

1 MECHANICAL DEMOLITION PLAN PHASE 0 - BLDG 702 - LEVEL 1

1/4" = 1'-0"

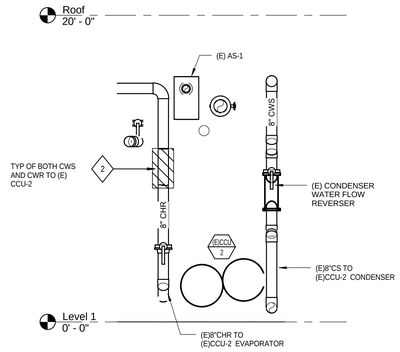

2 MECHANICAL DEMOLITION PHASE 0 SECTION 10"CWS/R

1/4" = 1'-0"

(TYPICAL OF BOTH CWS AND CWR TO (E)CCU-2

DEMOLITION SHEET NOTES

1. AFTER SHUTTING DOWN (E) CH-3 IN BLDG 703, AND ISOLATING (E)8"CHR PIPE USING THE APPROPRIATE VALVES, DEMOLISH THE INDICATED SECTION OF (E)"8"CHR.
2. AFTER SHUTTING DOWN (E) CCU-2, AND ISOLATING (E)10"CHR AND (E)10"CHS PIPES USING THE APPROPRIATE VALVES, DEMOLISH THE INDICATED SECTION ON (E)10"CHR AND 10"CHS PIPE. THIS OPERATION IS TO BE PERFORMED OB BOTH CHILLED WATER DROPS TO (E)CCU-2.
3. SCHEDULE OUTAGE OF BLDG 700 CHILLED WATER SUPPLY. DEMOLISH SHORT SECTION OF (E)8"CHS PIPE FOR INSTALLATION OF (N) TEE WITH BUTTERFLY VALVE. INSTALL (N) TEE AND VALVE BELOW EXISTING ISOLATION VALVE. TO BE PRICED SEPARATELY AS DEDUCTIVE ALTERNATE NO. 2.
4. SCHEDULE OUTAGE OF BLDG 650 AND 646 CHILLED WATER SUPPLY. REMOVE SHORT SECTION OF (E)8"CHS PIPE FOR INSTALLATION OF (N) TEE WITH BUTTERFLY VALVE. TO BE PRICED SEPARATELY AS DEDUCTIVE ALTERNATE NO. 2.
5. SCHEDULE OUTAGE OF BLDG 650 (AHU-8, 9, 10) CHILLED WATER SUPPLY. REMOVE SHORT SECTION OF (E)6"CHS PIPE FOR INSTALLATION OF (N) TEE, PIPING AND TWO (N) BUTTERFLY VALVES. TO BE PRICED SEPARATELY AS DEDUCTIVE ALTERNATE NO. 2.
6. AFTER SHUTTING DOWN (E) CH-3 IN BLDG 703, AND ISOLATING (E)8"CHR PIPE USING THE APPROPRIATE VALVES, DEMOLISH THE INDICATED SECTION OF (E)"8"CHR. TO BE PRICED SEPARATELY AS DEDUCTIVE ALTERNATE NO. 2.

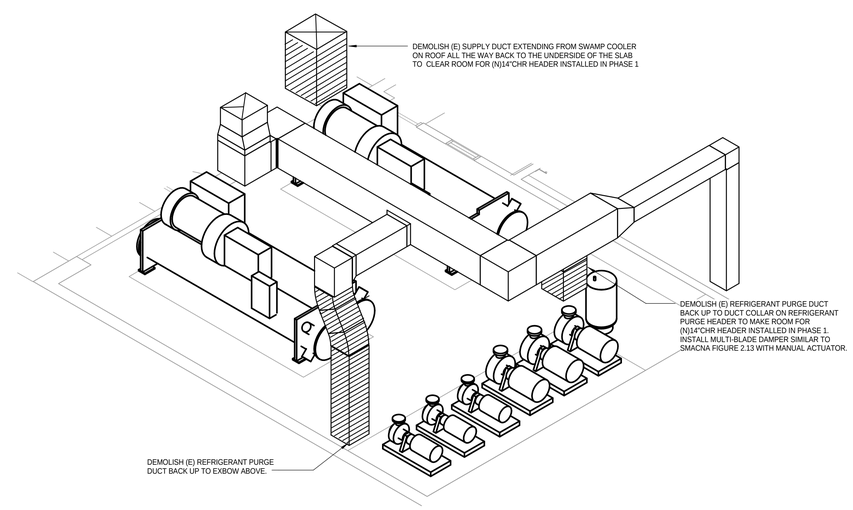

3 BLDG 702 CHILLER ROOM DUCT DEMOLITION

NORTH

Revisions:	Date
CONFORMED CONST. DOCUMENTS	07.11.14
CONSTRUCTION DOCUMENTS	06.30.14
DESIGN DEVELOPMENT 2	06.13.14

CONSULTANTS:

Affiliated Engineers W, Inc.
123 Mission Street, 7th Floor
San Francisco, California 94105
415.764.3700

ARCHITECT/ENGINEERS:

Hilliard ARCHITECTS
251 Post Street, Suite 620
San Francisco, CA 94108
Tel 415 989 6400
www.HilliardArchitects.com

Drawing Title: MECHANICAL DEMOLITION PLAN PHASE 0 - BLDG 702 - LEVEL 1

Approved: Project Director

Project Title: Install New High Efficiency Water Cooled Chiller No. 1

Location: VANCHCS; MATHER, CA

Date: 7.11.2014 | Checked: AEI | Drawn: AEI

Project Number: 612A4-14-006

Building Number: 702

Drawing Number: 702-MD-101

Dwg. of

Office of Construction and Facilities Management

Department of Veterans Affairs

HILLIARD ARCHITECTS INC. COPYRIGHT

7/10/2014 9:19:04 AM

VA FORM 08-6231

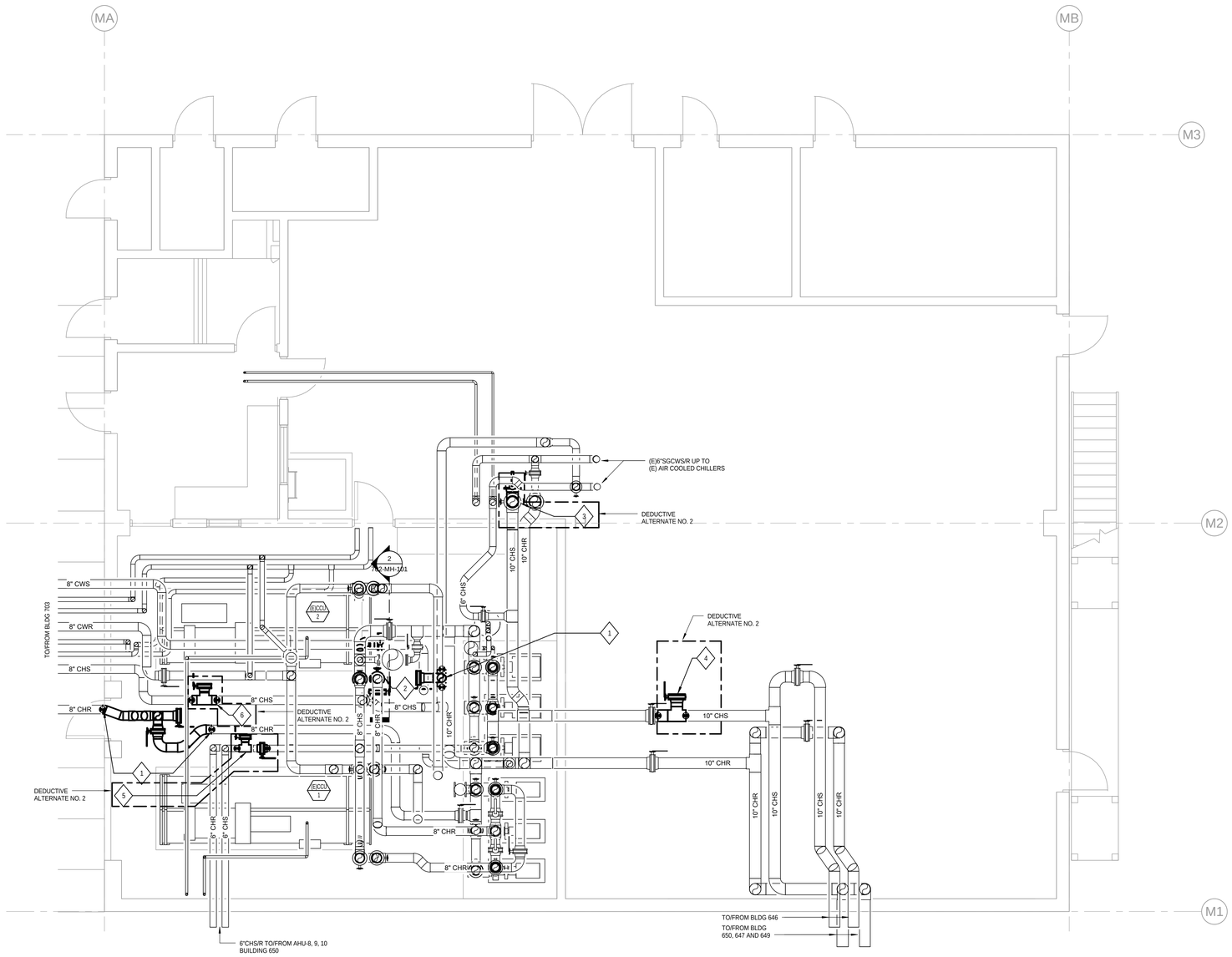

1 MECHANICAL HVAC NEW WORK PLAN PHASE 0 - BLDG 702 - LEVEL 1

1/4" = 1'-0"

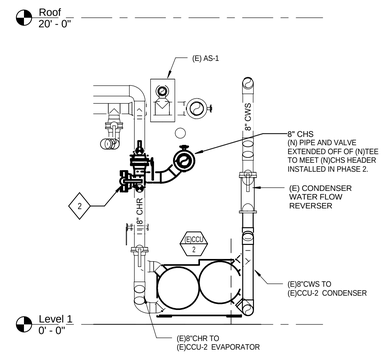

2 MECHANICAL NEW WORK PHASE 0 SECTION 10"CWS/R

1/4" = 1'-0"

NEW WORK SHEET NOTES

1. AFTER SHUTTING DOWN (E)CH-3, INSTALL (N) PIPE TEE AND ASSOCIATED VALVES. CONNECT TO EXISTING AS SHOWN. RE-START (E)CH-3. LOCK BRANCH VALVE CLOSED AND INSTALL BLIND FLANGE (TYPICAL).
2. INSTALL (N) PIPE TEE AND TWO (N) VALVES ON BOTH CHILLED WATER DROPS TO (E)CCU-2. WITH (N) LATERAL VALVES CLOSED, AND VALVE IN VERTICAL OPEN, RE-START (E)CCU-2. LOCK BRANCH VALVE CLOSED AND INSTALL BLIND FLANGE.
3. DURING SCHEDULED OUTAGE OF BLDG 700, INSTALL (N) 8" PIPE TEE AND (N) BUTTERFLY VALVE IN VERTICAL OF (E)8"CHS PIPE, AS SHOWN. INSTALL (N) TEE AND VALVE BELOW (DOWNSTREAM) OF (E) ISOALTION VALVE IN VERTICAL PORTION OF (E)8"CWS PIPE. LOCK BRANCH VALVE CLOSED AND INSTALL BLIND FLANGE. TO BE PRICED SEPARATELY AS DEDUCTIVE ALTERNATE NO. 2.
4. DURING SCHEDULED OUTAGE OF BLDG 650, 647, 649 AND 646, INSTALL (N) PIPE TEE AND (2) VALVES IN HORIZONTAL (E)6"CHS PIPE, AS SHOWN. LOCK BRANCH VALVE CLOSED AND INSTALL BLIND FLANGE. TO BE PRICED SEPARATELY AS DEDUCTIVE ALTERNATE NO. 2.
5. DURING SCHEDULED OUTAGE OF BLDG 650 (AHU-8, 9, 10) INSTALL (N) TEE AND TWO (N) VALVES, AS SHOWN. LOCK BRANCH VALVE CLOSED AND INSTALL BLIND FLANGE. TO BE PRICED SEPARATELY AS DEDUCTIVE ALTERNATE NO. 2.
6. AFTER SHUTTING DOWN (E)CH-3, INSTALL (N) PIPE TEE AND ASSOCIATED VALVES. CONNECT TO EXISTING AS SHOWN. RE-START (E)CH-3. LOCK BRANCH VALVE CLOSED AND INSTALL BLIND FLANGE (TYPICAL). TO BE PRICED SEPARATELY AS DEDUCTIVE ALTERNATE NO. 2.

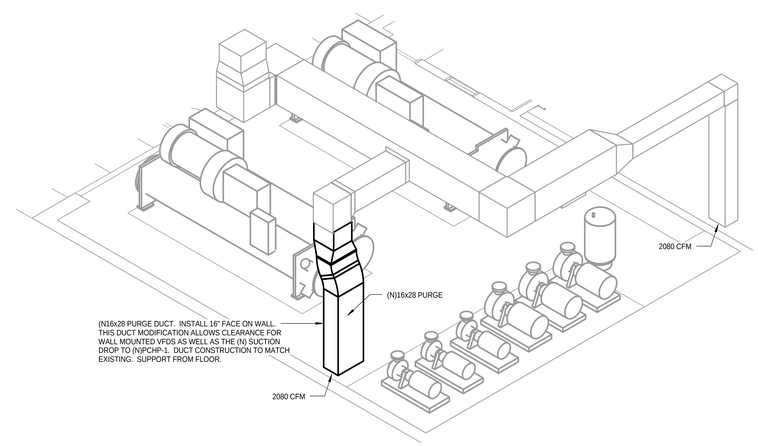

3 BLDG 702 CHILLER ROOM DUCT NEW WORK

NORTH

Revisions:	Date
CONFORMED CONST. DOCUMENTS	07.11.14
CONSTRUCTION DOCUMENTS	06.30.14

CONSULTANTS:

Affiliated Engineers W, Inc.
123 Mission Street, 7th Floor
San Francisco, California 94105
415.764.3700

ARCHITECT/ENGINEERS:

Hilliard ARCHITECTS
251 Post Street, Suite 620
San Francisco, CA 94108
Tel 415 989 6400
www.HilliardArchitects.com

Drawing Title: MECHANICAL HVAC NEW WORK PLAN PHASE 0 - BLDG 702 - LEVEL 1

Approved: Project Director

Project Title: Install New High Efficiency Water Cooled Chiller No. 1

Location: VANCHCS; MATHER, CA

Date: 7.11.2014 | Checked: AEI | Drawn: AEI

Project Number: 612A4-14-006

Building Number: 702

Drawing Number: 702-MH-101

Dwg. of

Office of Construction and Facilities Management

Department of Veterans Affairs

HILLIARD ARCHITECTS INC. COPYRIGHT

7/10/2014 9:21:03 AM

VA FORM 08-6231

DEMOLITION SHEET NOTES

1. AFTER ISOLATING ALL PIPES SERVING IT, SHUT DOWN AND DEMOLISH (E) CCU-1.
2. DEMOLISH (E)PCHP-1 AND (E)PCHP-3 ALONG WITH THEIR ASSOCIATED DISCHARGE PIPES, INCLUDING CROSS-CONNECT BETWEEN (E)PCHP-1 AND (E) PCHP-3 . PRIOR TO DEMOLITION, SUCTION DROPS TO (E)PCHP-1 AND (E)PCHP-3 TO BE VALVED OFF USING EXISTING VALVES AT SUCTION DIFFUSER. DEMOLITION OF (E)PCHP-3 TO BE PRICED SEPARATELY AS DEDUCTIVE ALTERNATE NO. 3.
3. DEMOLISH PRIMARY CHILLER PUMP DISCHARGE HEADER BACK TO (E)CCU-1, AS SHOWN.
4. DEMOLISH (E)10"CWS BETWEEN (E)CT-1 AND (E)CCU-1 CONDENSER BARREL CONNECTION. DEMOLISH (E)10"CWR FROM CONDENSER BARREL UP TO (E) CONDENSER WATER FLOW REVERSER. DEMOLISH (E) CONDENSER WATER FLOW REVERSER.

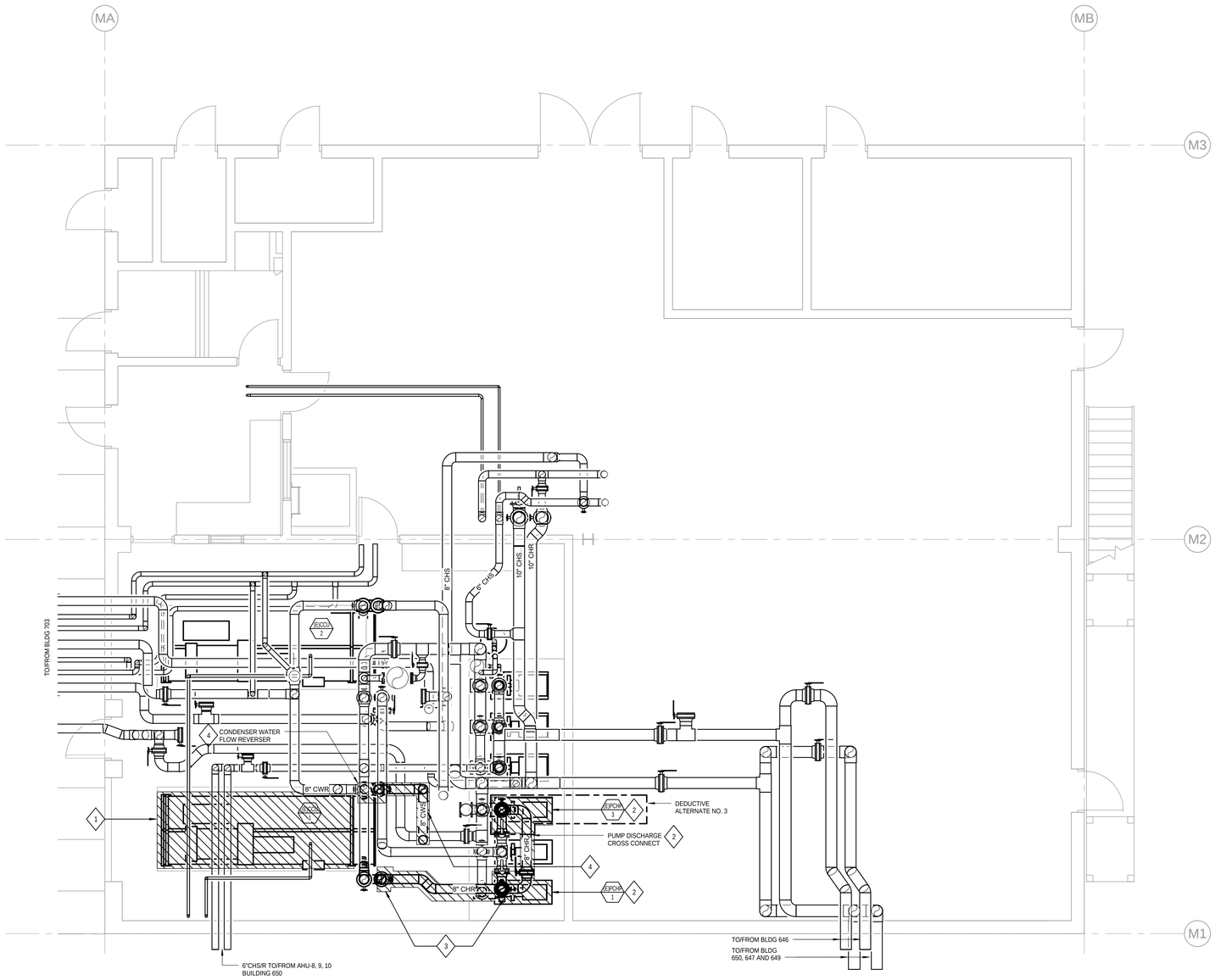

1 MECHANICAL DEMOLITION PLAN PHASE 1 - BLDG 702 - LEVEL 1
1/4" = 1'-0"

NORTH

7/10/2014 9:19:26 AM HILLIARD ARCHITECTS INC. COPYRIGHT

Revisions:	Date
CONFORMED CONST. DOCUMENTS	07.11.14
CONSTRUCTION DOCUMENTS	06.30.14
DESIGN DEVELOPMENT 2	06.13.14

CONSULTANTS:

Affiliated Engineers®

Affiliated Engineers W, Inc.
123 Mission Street, 7th Floor
San Francisco, California 94105
415.764.3700

ARCHITECT/ENGINEERS:

Hilliard ARCHITECTS

251 Post Street, Suite 620
San Francisco, CA 94108
Tel 415 989 6400
www.HilliardArchitects.com

Drawing Title: MECHANICAL DEMOLITION PLAN PHASE 1 - BLDG 702 - LEVEL 1

Approved: Project Director

Project Title: Install New High Efficiency Water Cooled Chiller No. 1

Location: VANCHCS; MATHER, CA

Date: 7.11.2014 | Checked: AEI | Drawn: AEI

Project Number: 612A4-14-006

Building Number: 702

Drawing Number: 702-MD-111

Dwg. of

Office of Construction and Facilities Management

Department of Veterans Affairs

VA FORM 08-6231

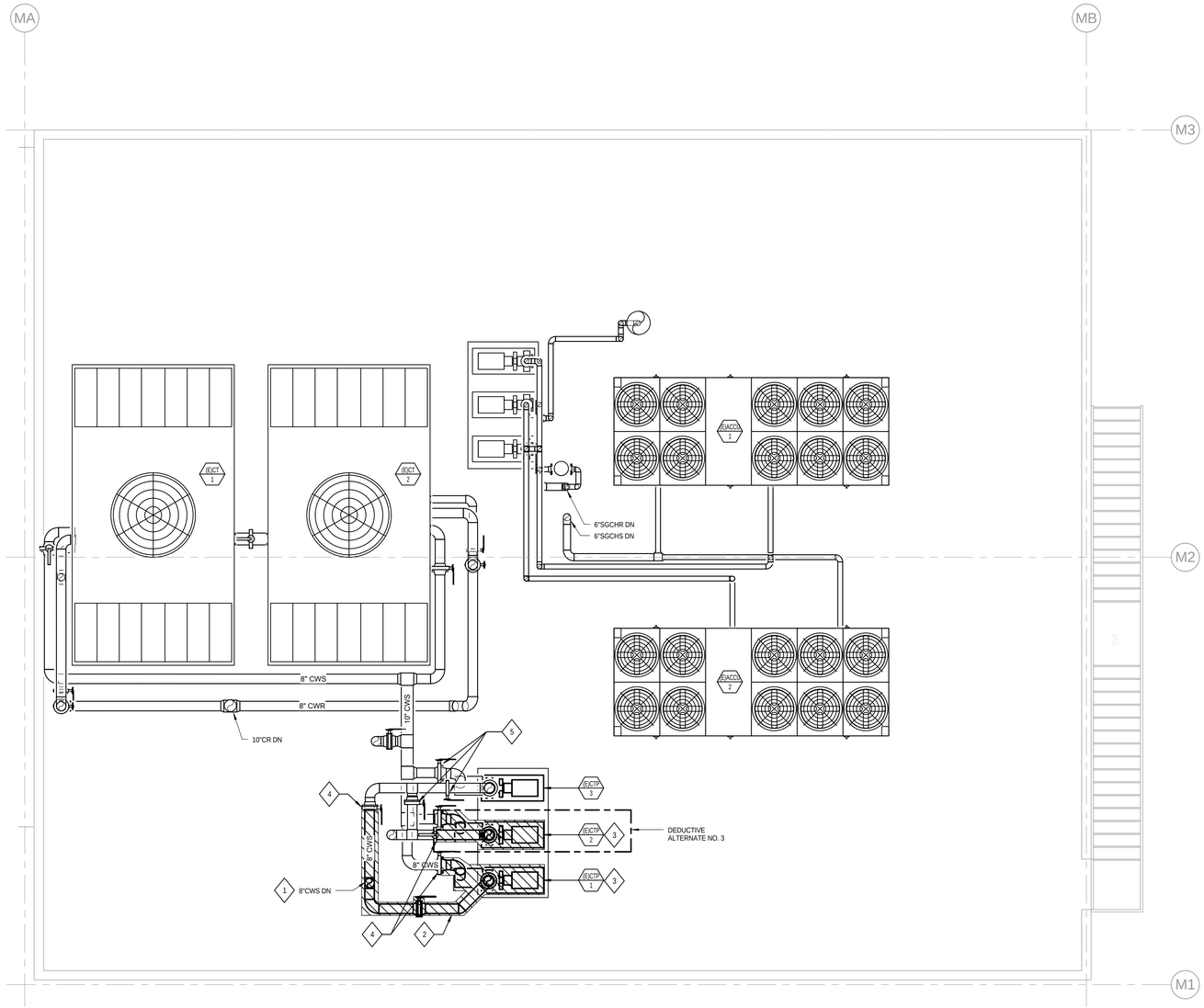

DEMOLITION SHEET NOTES

1. DEMOLISH (E)8"CWS DOWN THRU ROOF TO ITS CONNECTION WITH (E) CONDENSER BARREL FLOW REVERSER.
2. DEMOLISH (E)8"CWS PUMP DISCHARGE HEADER FROM VALVE BACK TO (E) CTP-1, AS SHOWN.
3. DEMOLISH (E)CTP-2 AND (E)CTP-1 WITH ASSOCIATED SUCTION PIPING UP TO VALVE, AS SHOWN. DEMOLITION OF (E)CTP-2 TO BE PRICED SEPARATELY AS DEDUCTIVE ALTERNATE NO. 3.
4. PRIOR TO START OF ANY DEMOLITION WORK SHOWN ON THIS DRAWING, CLOSE THESE (E) VALVES.
5. ENSURE THESE THREE VALVES ASSOCIATED WITH (E)CTP-3 ARE FULLY OPEN.

1 MECHANICAL DEMOLITION PLAN PHASE 1 - BLDG 702 - ROOF

1/4" = 1'-0"

NORTH

HILLIARD ARCHITECTS INC. COPYRIGHT

7/10/2014 9:19:36 AM

Revisions:	Date
CONFORMED CONST. DOCUMENTS	07.11.14
CONSTRUCTION DOCUMENTS	06.30.14
DESIGN DEVELOPMENT 2	06.13.14

CONSULTANTS:

Affiliated Engineers
Affiliated Engineers W, Inc.
123 Mission Street, 7th Floor
San Francisco, California 94105
415.764.3700

ARCHITECT/ENGINEERS:

Hilliard ARCHITECTS
251 Post Street, Suite 620
San Francisco, CA 94108
Tel 415 989 6400
www.HilliardArchitects.com

Drawing Title: MECHANICAL DEMOLITION PLAN PHASE 1 - BLDG 702 - ROOF

Approved: Project Director

Project Title: Install New High Efficiency Water Cooled Chiller No. 1

Location: VANCHCS; MATHER, CA

Date: 7.11.2014 | Checked: AEI | Drawn: AEI

Project Number: 612A4-14-006

Building Number: 702

Drawing Number: 702-MD-112

Dwg. of

Office of Construction and Facilities Management

Department of Veterans Affairs

VA FORM 08-6231

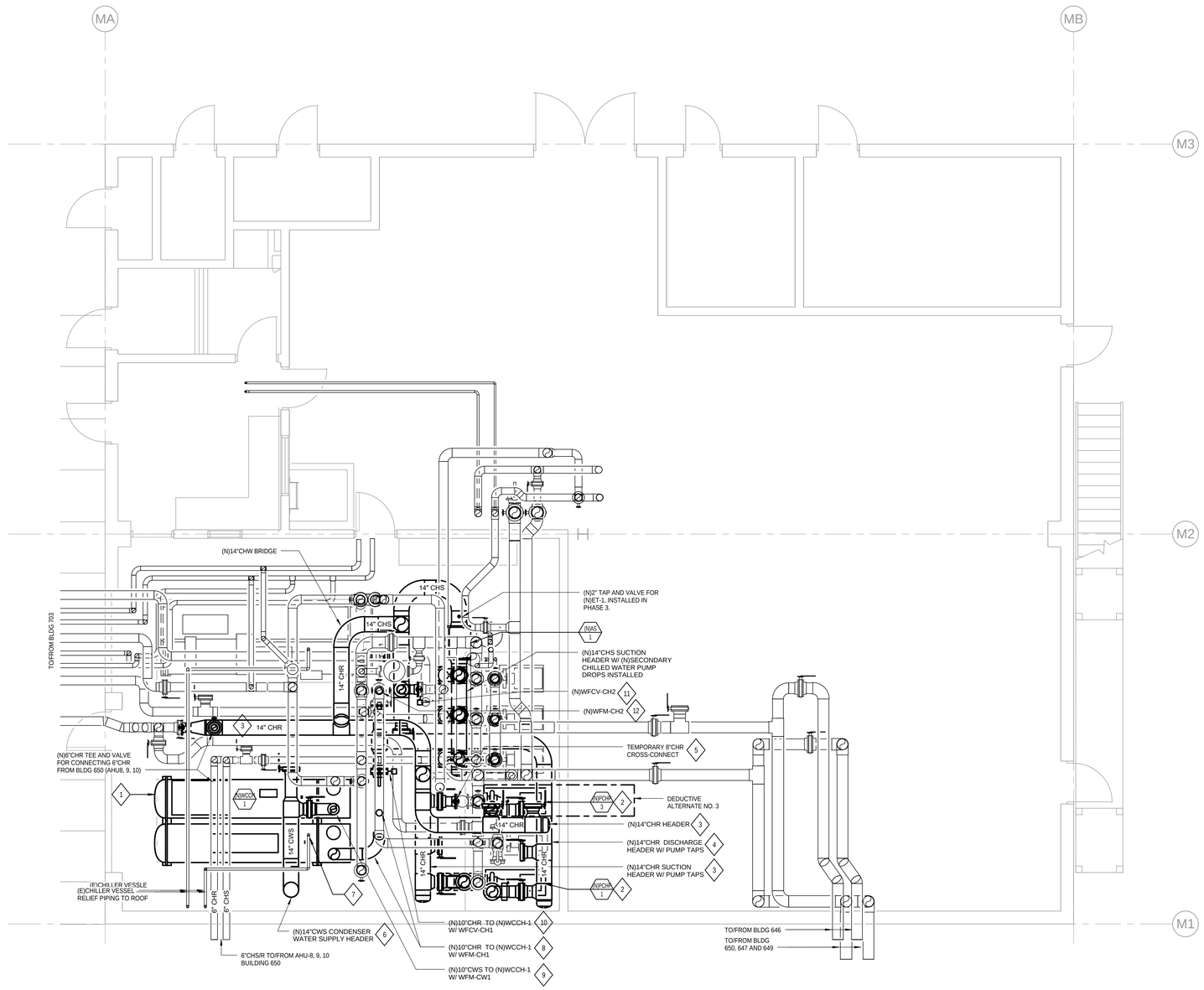

1 MECHANICAL HVAC NEW WORK PLAN PHASE 1 - BLDG 702 - LEVEL 1

1/4" = 1'-0"

NEW WORK SHEET NOTES

1. INSTALL (N)WCCH-1 CHILLER ONTO EXISTING EQUIPMENT PAD.
2. INSTALL (N)PCHP-1 AND (N)PCHP-3 ONTO EXISTING EQUIPMENT PAD. (N)PCHP-3 TO BE PRICED SEPARATELY AS DEDUCTIVE ALTERNATE NO. 3.
3. INSTALL (N)14"CHR CHILLED WATER RETURN HEADER.
4. INSTALL (N) PCHP DISCHARGE HEADER TO FROM (N) PUMPS TO (N)WCCH-1.
5. INSTALL TEMPORARY CROSS-CONNECT, CONNECTING (N)CHR SUCTION HEADER TO (E)CHR SUCTION HEADER AT (E) 8" GATE VALVE.
6. INSTALL (N)14"CWS HEADER. CONNECT (N)10"CWS DROP TO (N)WCCH-1.
7. ONCE (N)WCCH-1 IS INSTALLED, RE-CONNECT VESSEL RELIEF VALVES TO (E) CHILLER RELIEF PIPING TO ROOF.
8. INSTALL (N) WATER FLOW METER WFM-CH1 ON (N)10"CHR PIPE, AS SHOWN.
9. INSTALL (N) WATER FLOW METER WFM-CW1 ON (N)10"CWR PIPE, AS SHOWN.
10. INSTALL (N) WATER FLOW CONTROL VALVE WFCV-CH1 ON (N)10"CHR PIPE, AS SHOWN.
11. INSTALL (N) WATER FLOW CONTROL VALVE WFCV-CH2 ON (N)8"CHS PIPE, AS SHOWN.
12. INSTALL (N) WATER FLOW METER WFM-CH2 ON (N)10"CHR PIPE DROP TO (E) CCU-2, AS SHOWN.

HILLIARD ARCHITECTS INC. COPYRIGHT

7/10/2014 9:21:17 AM

Revisions:	Date
CONFORMED CONST. DOCUMENTS	07.11.14
CONSTRUCTION DOCUMENTS	06.30.14
DESIGN DEVELOPMENT 2	06.13.14

CONSULTANTS:

AEI Affiliated Engineers®

Affiliated Engineers W, Inc.
123 Mission Street, 7th Floor
San Francisco, California 94105
415.764.3700

ARCHITECT/ENGINEERS:

Hilliard ARCHITECTS

251 Post Street, Suite 620
San Francisco, CA 94108
Tel 415 989 6400
www.HilliardArchitects.com

Drawing Title: MECHANICAL HVAC NEW WORK PLAN PHASE 1 - BLDG 702 - LEVEL 1

Approved: Project Director

Project Title: Install New High Efficiency Water Cooled Chiller No. 1

Location: VANCHCS; MATHER, CA

Date: 7.11.2014 | Checked: AEI | Drawn: AEI

Project Number: 612A4-14-006

Building Number: 702

Drawing Number: 702-MH-111

Dwg. of

Office of Construction and Facilities Management

Department of Veterans Affairs

VA FORM 08-6231

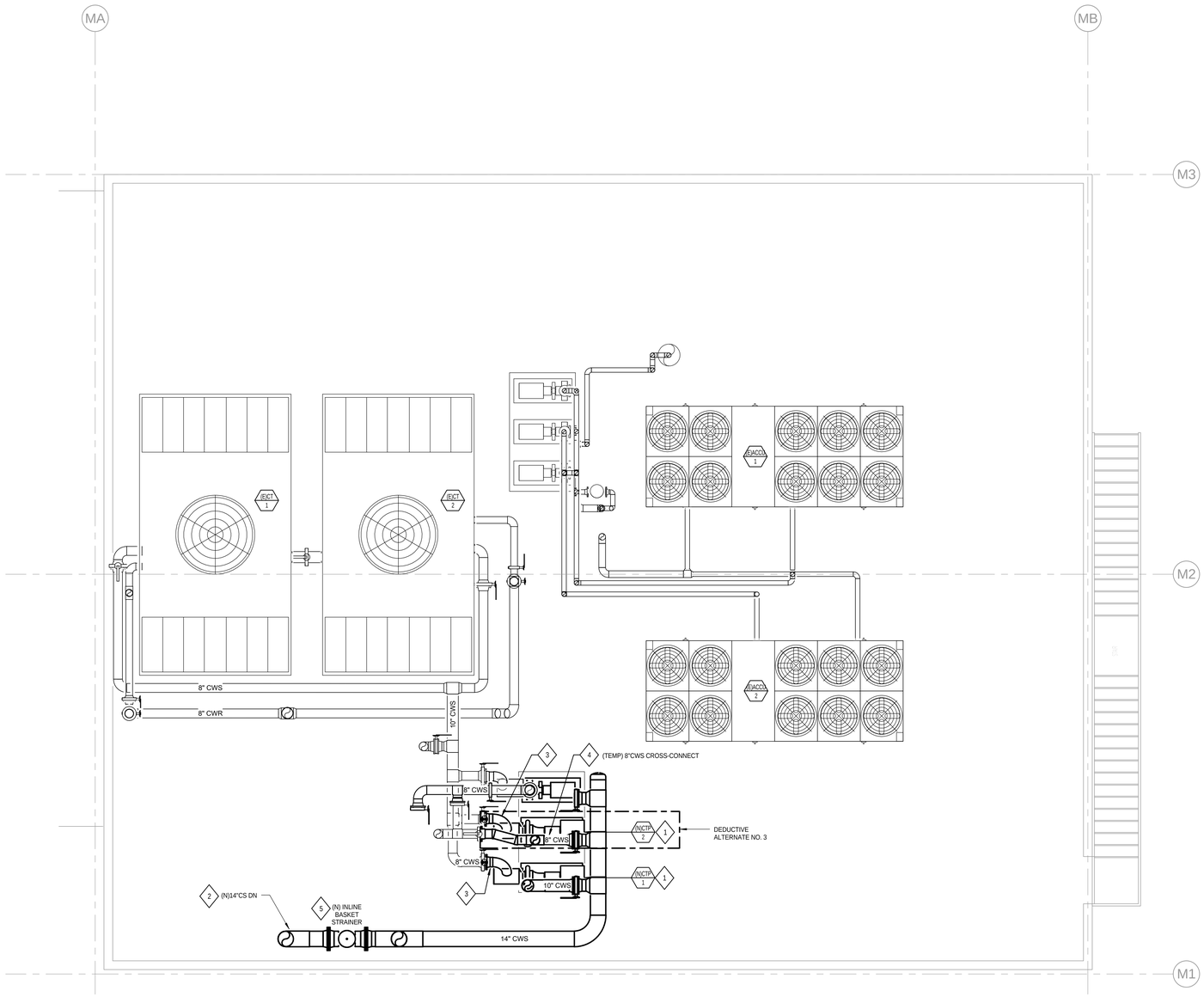

NEW WORK SHEET NOTES

1. INSTALL NEW COOLING TOWER PUMPS (N)CTP-2 AND (N)CTP-1 ON EXISTING EQUIPMENT PAD. (N)CTP-2 TO BE PRICED SEPARATELY AS DEDUCTIVE ALTERNATE NO. 3.
2. INSTALL (N)14"CWS PUMP DISCHARGE HEADER WITH (3) VALVED PUMP TAPS DOWN THRU (N) ROOOF PENETRATION.
3. INSTALL (TEMPORARY) (N)8"CWS PUMP SUCTION PIPING TO (N)CTP-2 AND (N)CTP-1. THIS PIPING WILL BE REMOVED WHEN NEW COOLING TOWER PUMP SUCTION HEADER AND ASSOCIATED PIPING IS INSTALLED IN PHASE 4.
4. INSTALL TEMPORARY 8" CROSS CONNECT BETWEEN (N) 14"CWS DISCHARGE HEADER AND (E) PUMP SUCTION HEADER.
5. INSTALL (N) INLINE BASKET STRAINER ON (N)14"CWS PIPE.

1 MECHANICAL HVAC NEW WORK PLAN PHASE 1 - BLDG 702 - ROOF

1/4" = 1'-0"

NORTH

7/10/2014 9:21:27 AM HILLIARD ARCHITECTS INC. COPYRIGHT

Revisions:	Date
CONFORMED CONST. DOCUMENTS	07.11.14
CONSTRUCTION DOCUMENTS	06.30.14
DESIGN DEVELOPMENT 2	06.13.14

CONSULTANTS:

Affiliated Engineers®

Affiliated Engineers W, Inc.
123 Mission Street, 7th Floor
San Francisco, California 94105
415.764.3700

ARCHITECT/ENGINEERS:

Hilliard ARCHITECTS

251 Post Street, Suite 620
San Francisco, CA 94108
Tel 415 989 6400
www.HilliardArchitects.com

Drawing Title: MECHANICAL HVAC NEW WORK PLAN PHASE 1 - BLDG 702 - ROOF

Approved: Project Director

Project Title: Install New High Efficiency Water Cooled Chiller No. 1

Location: VANCHCS; MATHER, CA

Date: 7.11.2014 | Checked: AEI | Drawn: AEI

Project Number: 612A4-14-006

Building Number: 702

Drawing Number: 702-MH-112

Dwg. of

Office of Construction and Facilities Management

Department of Veterans Affairs

VA FORM 08-6231

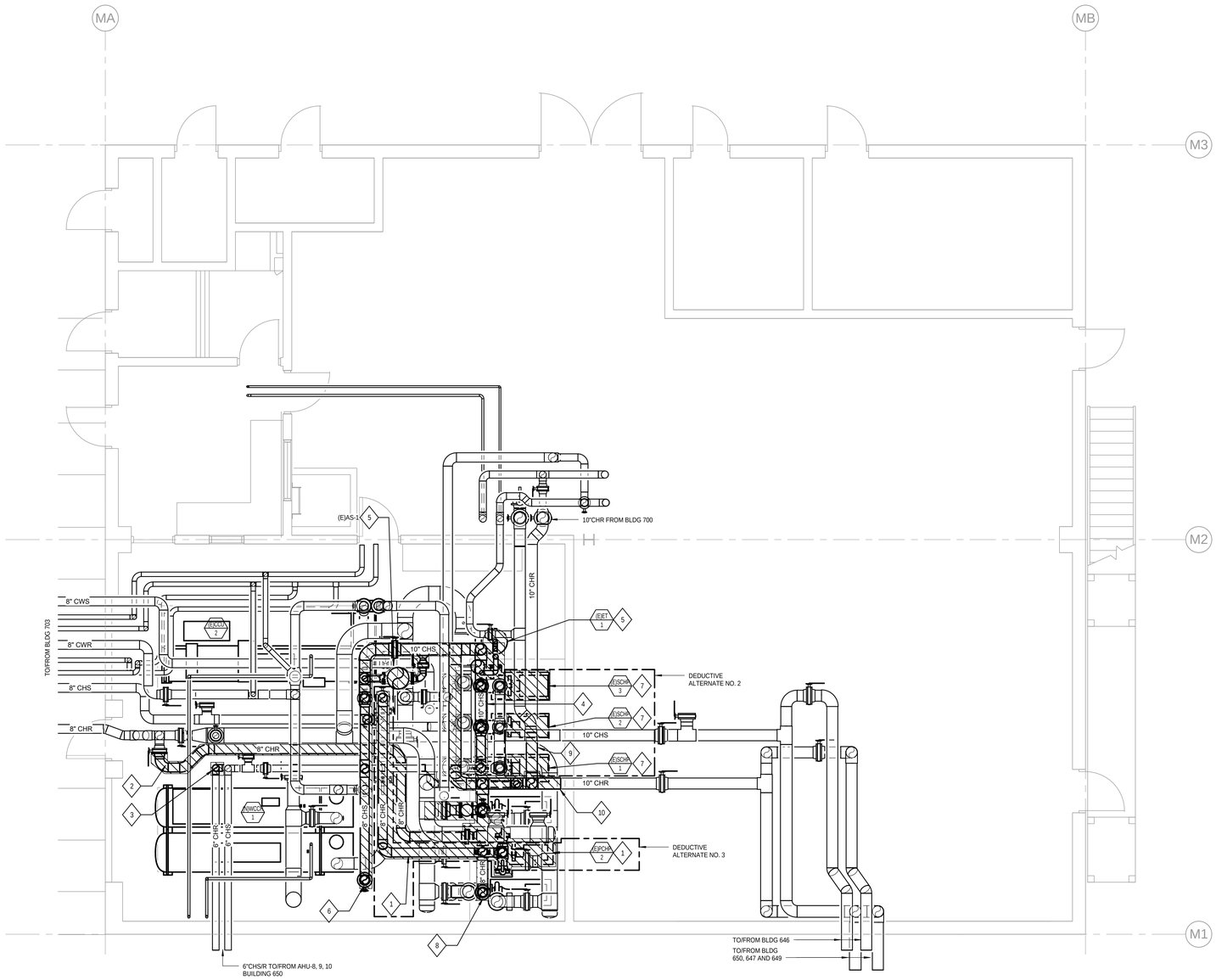

1 MECHANICAL DEMOLITION PLAN PHASE 2 - BLDG 702 - LEVEL 1

1/4" = 1'-0"

DEMOLITION SHEET NOTES

1. DEMOLISH (E)PCHP-2 AND IT'S ASSOCIATED CHR PIPE UP TO ISOLATION VALVE AT (E)CCU-2 . THIS DEMOLITION WORK TO BE PRICED SEPARATELY AS DEDUCTIVE ALTERNATE NO. 3
2. DEMOLISH (E)8"CHR RETURN FROM BLDG 703.
3. SCHEDULE OUTAGE OF BLDG 650 (AHU-8, 9, 10). DEMOLISH (E)6"CHR FROM BLDG 650 (AHU-8, 9, 10).
4. DEMOLISH (E) SECONDARY CHILLED WATER PIPING, AS SHOWN.
5. DEMOLISH (E)AS-1 AND (E) ET-1.
6. DEMOLISH (E)10"CHS DROP THAT PREVIOUSLY SERVED (E)CCU-1.
7. DEMOLISH (E)SCHP-1, (E)SCHP-2 AND (E)SCHP-3 ONE AT A TIME. AS EACH NEW PUMP IS INSTALLED, CONNECT (N)SCHP PUMP TO (N) SECONDARY CHILLED WATER SUCTION HEADER AND (E) SECONDARY CHILLED WATER DISCHARGE HEADER. THIS DEMOLITION WORK TO BE PROCED SEPARATELY AS DEDUCTIVE ALTERNATE NO. 2.
8. DEMOLISH (E)CHR PRIMARY CHILLED WATER PUMP RETURN HEADER.
9. SCHEDULE OUTAGE OF BLDG 700. DEMOLISH (E)10"CHR FROM BLDH 700.
10. SCHEDULE OUTAGE OF BLDG 650 AND 646. DEMOLISH (E)10"CHR FROM BLDH 650/646.

NORTH

HILLIARD ARCHITECTS INC. COPYRIGHT

7/10/2014 9:19:50 AM

Revisions:	Date
CONFORMED CONST. DOCUMENTS	07.11.14
CONSTRUCTION DOCUMENTS	06.30.14
DESIGN DEVELOPMENT 2	06.13.14

VA FORM 08-6231

CONSULTANTS:

Affiliated Engineers®
Affiliated Engineers W, Inc.
123 Mission Street, 7th Floor
San Francisco, California 94105
415.764.3700

ARCHITECT/ENGINEERS:

Hilliard ARCHITECTS
251 Post Street, Suite 620
San Francisco, CA 94108
Tel 415 989 6400
www.HilliardArchitects.com

Drawing Title	MECHANICAL DEMOLITION PLAN PHASE 2 - BLDG 702 - LEVEL 1
Approved: Project Director	
Project Title	Install New High Efficiency Water Cooled Chiller No. 1
Location	VANCHCS; MATHER, CA
Date	7.11.2014
Checked	AEI
Drawn	AEI
Project Number	612A4-14-006
Building Number	702
Drawing Number	702-MD-121
Dwg. of	

Office of Construction and Facilities Management

Department of Veterans Affairs

DEMOLITION SHEET NOTES

1. DEMOLISH (E)CTP-3. TO BE PRICED SEPARATELY AS DEDUCTIVE ALTERNATE NO. 3
2. DEMOLISH SUCTION AND DISCHARGE PIPING ASSOCIATED WITH (E)CTP-3, AS SHOWN. TO BE PRICED SEPARATELY AS DEDUCTIVE ALTERNATE NO. 3.

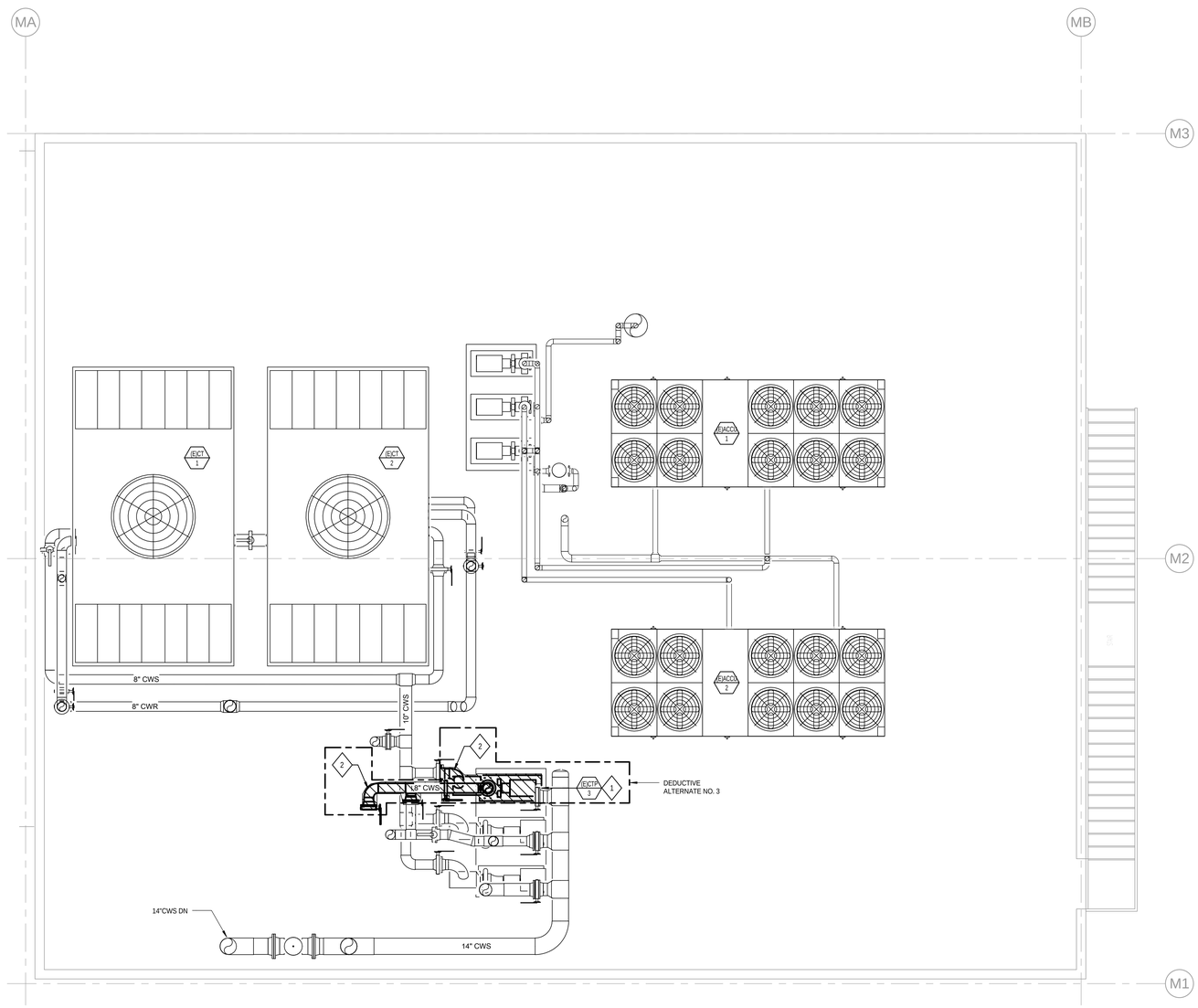

1 MECHANICAL DEMOLITION PLAN PHASE 2 - BLDG 702 - ROOF

1/4" = 1'-0"

NORTH

HILLIARD ARCHITECTS INC. COPYRIGHT

7/10/2014 9:20:01 AM

Revisions:	Date
CONFORMED CONST. DOCUMENTS	07.11.14
CONSTRUCTION DOCUMENTS	06.30.14
DESIGN DEVELOPMENT 2	06.13.14

CONSULTANTS:

Affiliated Engineers

Affiliated Engineers W, Inc.
123 Mission Street, 7th Floor
San Francisco, California 94105
415.764.3700

ARCHITECT/ENGINEERS:

Hilliard ARCHITECTS

251 Post Street, Suite 620
San Francisco, CA 94108
Tel 415 989 6400
www.HilliardArchitects.com

Drawing Title: MECHANICAL DEMOLITION PLAN PHASE 2 - BLDG 702 - ROOF

Approved: Project Director

Project Title: Install New High Efficiency Water Cooled Chiller No. 1

Location: VANCHCS; MATHER, CA

Date: 7.11.2014 | Checked: AEI | Drawn: AEI

Project Number: 612A4-14-006

Building Number: 702

Drawing Number: 702-MD-122

Dwg. of

Office of Construction and Facilities Management

Department of Veterans Affairs

VA FORM 08-6231

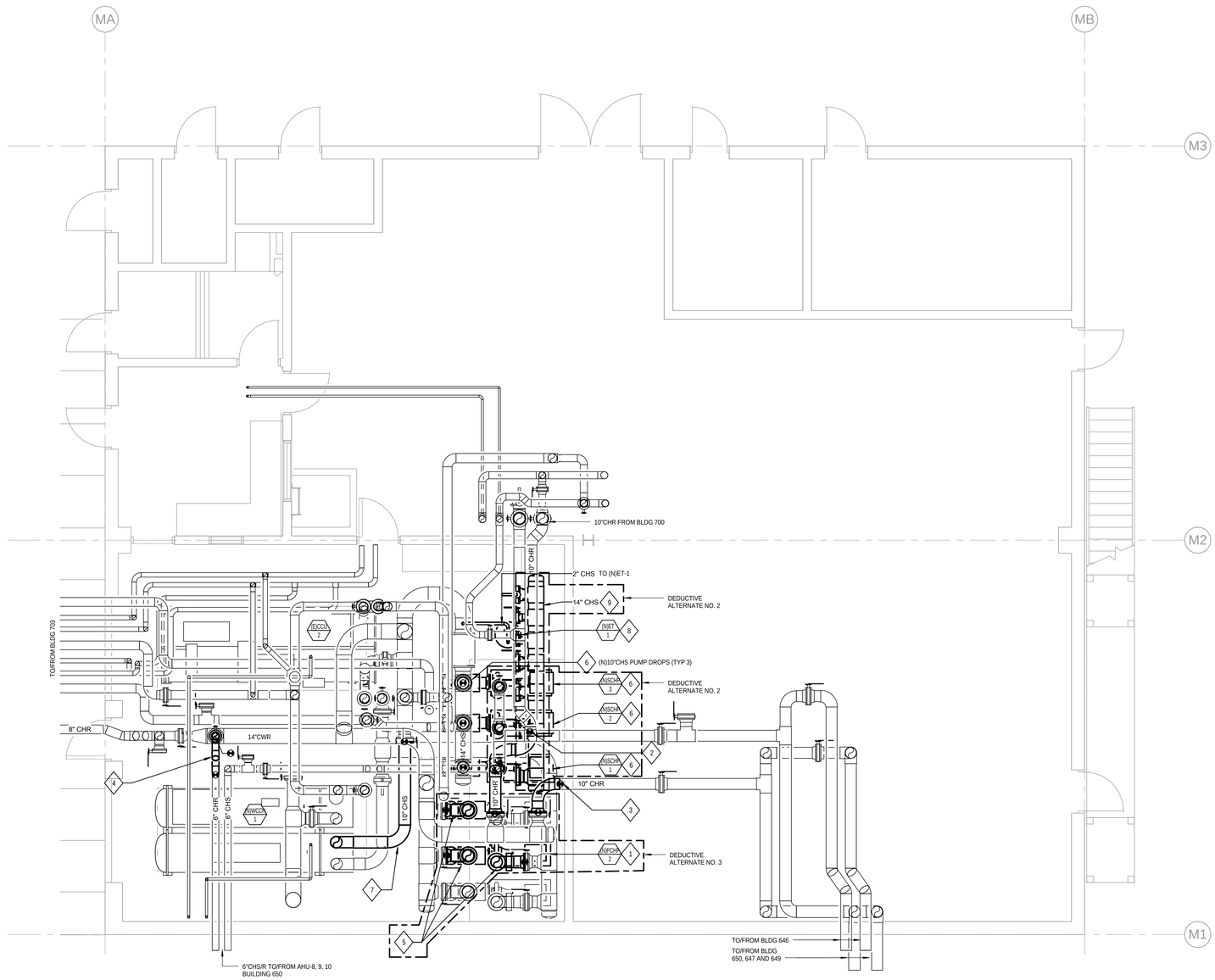

1 MECHANICAL HVAC NEW WORK PLAN PHASE 2 - BLDG 702 - LEVEL 1

1/4" = 1'-0"

NEW WORK SHEET NOTES

1. INSTALL (N)PCHP-2 ON EXISTING EQUIPMENT PAD. TO BE PRICED SEPARATELY AS DEDUCTIVE ALTERNATE NO. 3.
2. CONNECT (E)10"CHR PIPE FROM BLDG 700 TO NEW TAP ON (N)14"CWR HEADER.
3. CONNECT (E)10"CHR PIPE FROM BLDG650 AND 646 TO NEW TAP ON (N)14"CHR HEADER.
4. CONNECT (E)6"CHR PIPE FROM BLDG 650 (AHU-8, 9, 10) TO NEW TAP ON (N) 14"CHR HEADER.
5. INSTALL (N) 10"CHR PUMP SUCTION AND DISCHARGE PIPING AT PRIMARY CHILLED WATER PUMPS PCHP-2 AND PCHP-3, AS SHOWN. TO BE PRICED SEPARATELY AS DEDUCTIVE ALTERNATE NO. 3.
6. INSTALL (N)SCHP-1, (N)SCHP-2 AND (N)SCHP-3 ONE AT A TIME. AS EACH (N) PUMP IS INSTALLED, CONNECT (N)SCHP PUMP TO (N) SECONDARY CHILLED WATER SUCTION HEADER AND (E) SECONDARY CHILLED WATER DISCHARGE HEADER. INSTALLATION OF PUMPS TO BE PRICED SEPARATELY AS DEDUCTIVE ALTERNATE NO. 2.
7. INSTALL (N)10"CHR PIPE BETWEEN VALVE INSTALLED AT THE END OF (N) SECONDARY CHILLED WATER SUPPLY HEADER IN PHASE 1 AND (N)WCCH-1.
8. INSTALL (N)ET-1 IN PLACE OF DEMOLISHED UNIT.
9. INSTALL (N)14"CHS SECONDARY CHILLED WATER PUMP DISCHARGE HEADER. TO BE PRICED SEPARATELY AS DEDUCTIVE ALTERNATE NO. 2.

NORTH

7/10/2014 9:21:41 AM HILLIARD ARCHITECTS INC. COPYRIGHT

Revisions:	Date
CONFORMED CONST. DOCUMENTS	07.11.14
CONSTRUCTION DOCUMENTS	06.30.14
DESIGN DEVELOPMENT 2	06.13.14

CONSULTANTS:

AEI Affiliated Engineers®
Affiliated Engineers W, Inc.
123 Mission Street, 7th Floor
San Francisco, California 94105
415.764.3700

ARCHITECT/ENGINEERS:

Hilliard ARCHITECTS
251 Post Street, Suite 620
San Francisco, CA 94108
Tel 415 989 6400
www.HilliardArchitects.com

Drawing Title	MECHANICAL HVAC NEW WORK PLAN PHASE 2 - BLDG 702 - LEVEL 1
Approved: Project Director	
Project Title	Install New High Efficiency Water Cooled Chiller No. 1
Location	VANCHCS; MATHER, CA
Date	7.11.2014
Checked	AEI
Drawn	AEI
Project Number	612A4-14-006
Building Number	702
Drawing Number	702-MH-121
Dwg. of	

Office of Construction and Facilities Management

Department of Veterans Affairs

VA FORM 08-6231

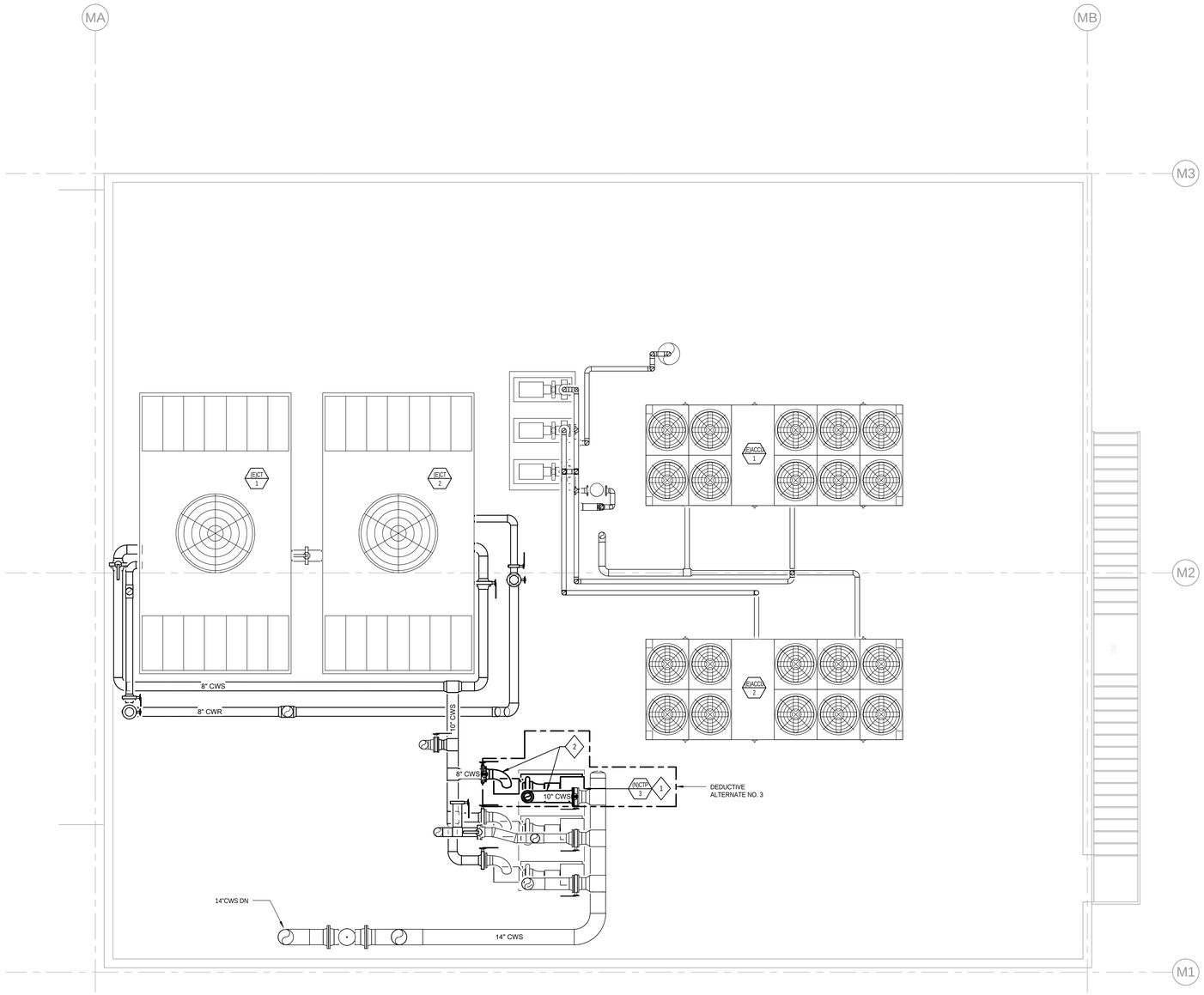

NEW WORK SHEET NOTES

1. INSTALL (N)CTP-3 ON EXISTING EQUIPMENT PAD. TO BE PRICED SEPARATELY AS DEDUCTIVE ALTERNATE NO. 3.
2. INSTALL (TEMP) SUCTION AND DISCHARGE PIPING, AS SHOWN. THESE PIPES WILL BE REMOVED WHEN THE FINAL SUCTION AND DISCHARGE HEADERS ARE INSTALLED. TO BE PRICED SEPARATELY AS DEDUCTIVE ALTERNATE NO. 3.

1 MECHANICAL HVAC NEW WORK PLAN PHASE 2 - BLDG 702 - ROOF

1/4" = 1'-0"

NORTH

HILLIARD ARCHITECTS INC. COPYRIGHT

7/10/2014 9:21:49 AM

Revisions:	Date
CONFORMED CONST. DOCUMENTS	07.11.14
CONSTRUCTION DOCUMENTS	06.30.14
DESIGN DEVELOPMENT 2	06.13.14

VA FORM 08-6231

CONSULTANTS:

Affiliated Engineers
Affiliated Engineers W, Inc.
123 Mission Street, 7th Floor
San Francisco, California 94105
415.764.3700

ARCHITECT/ENGINEERS:

Hilliard ARCHITECTS
251 Post Street, Suite 620
San Francisco, CA 94108
Tel 415 989 6400
www.HilliardArchitects.com

Drawing Title	MECHANICAL HVAC NEW WORK PLAN PHASE 2 - BLDG 702 - ROOF
Approved: Project Director	
Project Title	Install New High Efficiency Water Cooled Chiller No. 1
Location	VANCHCS; MATHER, CA
Date	7.11.2014
Checked	AEI
Drawn	AEI
Project Number	612A4-14-006
Building Number	702
Drawing Number	702-MH-122
Dwg. of	

Office of Construction and Facilities Management

Department of Veterans Affairs

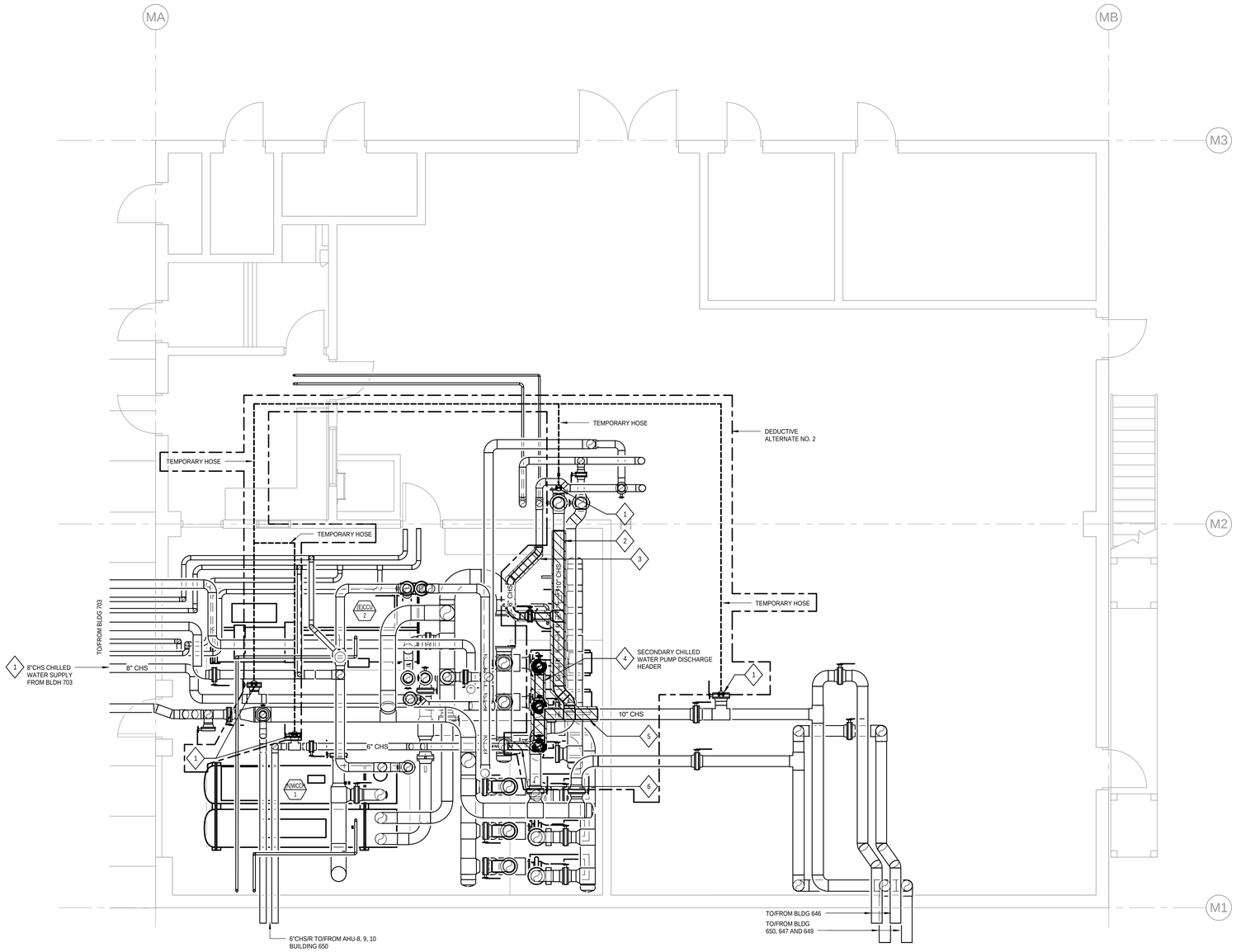

1 MECHANICAL DEMOLITION PLAN PHASE 3 - BLDG 702 - LEVEL 1

1/4" = 1'-0"

DEMOLITION SHEET NOTES

1. PRIOR TO PERFORMING DEMOLITION SCOPE SHOWN, CONNECT TEMPORARY CHILLED WATER SUPPLY FROM BLDG 703 PRIMARY CHILLED WATER PUMPS TO SUPPLY OF BLDG 650, 646, AHU-8, 9, 10, AND BLDG 700 SO THAT THE SECONDARY SUPPLY HEADER CAN BE REPLACED WITHOUT INTERRUPTION OF CHILLED WATER SERVICE.
2. DEMOLISH (E)10"CHS SECONDARY CHILLED WATER SUPPLY TO BLDG 700.
3. DEMOLISH (E) 6"CHS SECONDARY CHILLED WATER SUPPLY TO SURGURY.
4. DEMOLISH (E)SECONDARY CHILLED WATER PUMP DISCHARGE HEADER.
5. DEMOLISH (E)10"CHS SECONDARY CHILLED WATER SUPPLY TO BLDG 650 AND 646.
6. DEMOLISH (E)6"CHS SECONDARY CHILLED WATER SUPPLY TO BLDG 650 (AHU-8, 9, 10).

DEDUCTIVE ALTERNATES

1. ALL SCOPE ON THIS SHEET TO BE PRICED SEPARATELY AS DEDUCTIVE ALTERNATE NO. 2

NORTH

Revisions:	Date
CONFORMED CONST. DOCUMENTS	07.11.14
CONSTRUCTION DOCUMENTS	06.30.14
DESIGN DEVELOPMENT 2	06.13.14

CONSULTANTS:

AEI Affiliated Engineers®
Affiliated Engineers W, Inc.
123 Mission Street, 7th Floor
San Francisco, California 94105
415.764.3700

ARCHITECT/ENGINEERS:

Hilliard ARCHITECTS
251 Post Street, Suite 620
San Francisco, CA 94108
Tel 415 989 6400
www.HilliardArchitects.com

Drawing Title: MECHANICAL DEMOLITION PLAN PHASE 3 - BLDG 702 - LEVEL 1

Approved: Project Director

Project Title: Install New High Efficiency Water Cooled Chiller No. 1

Location: VANCHCS; MATHER, CA

Date: 7.11.2014 | Checked: AEI | Drawn: AEI

Project Number: 612A4-14-006

Building Number: 702

Drawing Number: 702-MD-131

Dwg. of

Office of Construction and Facilities Management

Department of Veterans Affairs

VA FORM 08-6231

7/10/2014 9:20:16 AM HILLIARD ARCHITECTS INC. COPYRIGHT

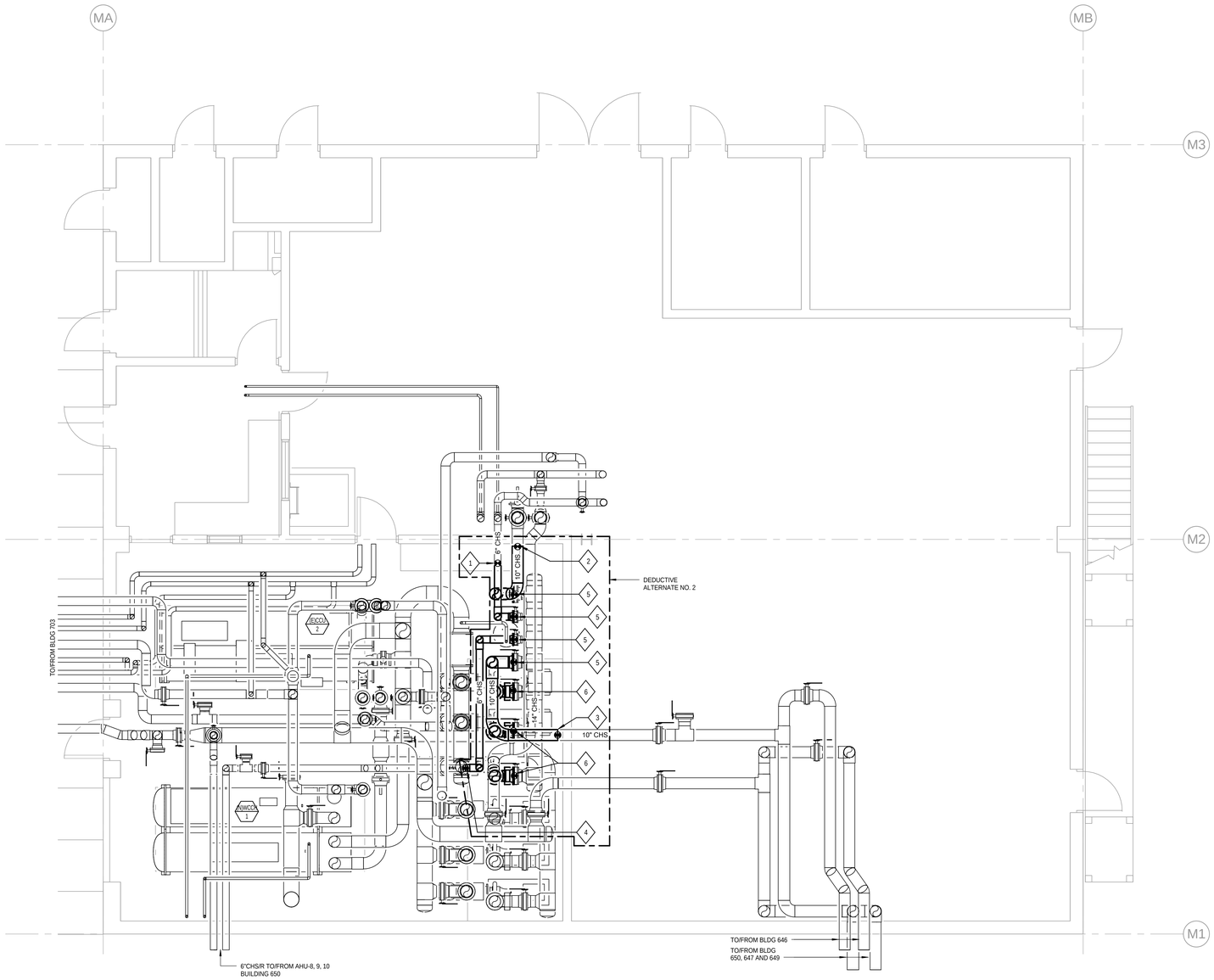

1 MECHANICAL HVAC NEW WORK PLAN PHASE 3 - BLDG 702 - LEVEL 1

1/4" = 1'-0"

NEW WORK SHEET NOTES

1. CONNECT (E)6"CHS FROM SURGERY TO (N) 6"CHS PIPE STUB.
2. CONNECT (E)10"CWS FROM BLDG 700 TO (N) 10"CHS PIPE STUB.
3. CONNECT (E)10"CHS FROM BLDG 650 AND 646 TO (N)10"CHS PIPE STUB.
4. CONNECT (E)6"CHS FROM BLDG 650 (AHU-8, 9, 10) TO (N) 6"CHS PIPE STUB.
5. CONNECT (N) PIPE STUBS TO SECONDARY CHILLED WATER SUPPLY HEADER TAPS.
6. INSTALL (N) PUMP DISCHARGE PIPING CONNECTING (N)SCHP TO (N) 14"CHS PUMP DISCHARGE HEADER (TYPICAL 3 PUMPS)

DEDUCTIVE ALTERNATES

1. ALL SCOPE ON THIS SHEET TO BE PRICED SEPARATELY AS DEDUCTIVE ALTERNATE NO. 2

NORTH

HILLIARD ARCHITECTS INC. COPYRIGHT

7/10/2014 9:22:02 AM

Revisions:	Date
CONFORMED CONST. DOCUMENTS	07.11.14
CONSTRUCTION DOCUMENTS	06.30.14
DESIGN DEVELOPMENT 2	06.13.14

CONSULTANTS:

Affiliated Engineers
Affiliated Engineers W, Inc.
123 Mission Street, 7th Floor
San Francisco, California 94105
415.764.3700

ARCHITECT/ENGINEERS:

Hilliard ARCHITECTS
251 Post Street, Suite 620
San Francisco, CA 94108
Tel 415 989 6400
www.HilliardArchitects.com

Drawing Title	MECHANICAL HVAC NEW WORK PLAN PHASE 3 - BLDG 702 - LEVEL 1
Approved: Project Director	
Project Title	Install New High Efficiency Water Cooled Chiller No. 1
Location	VANCHCS; MATHER, CA
Date	7.11.2014
Checked	AEI
Drawn	AEI
Project Number	612A4-14-006
Building Number	702
Drawing Number	702-MH-131
Dwg. of	

Office of Construction and Facilities Management

Department of Veterans Affairs

VA FORM 08-6231

DEMOLITION SHEET NOTES

1. DEMOLISH (E) CONDENSER WATER PIPING FROM ROOF BACK TO (E) CONDENSER WATER FLOW REVERSER, AS SHOWN.
2. DEMOLISH (E) CONDENSER WATER FLOW REVERSER. EXISTING PIPE BETWEEN (E) CONDENSER WATER FLOW REVERSER AND (E)CCU-2 TO REMAIN. (N) CONDENSER WATER PIPING INSTALLED IN PHASE 4 WILL CONNECT TO THESE REMAINIG PIPES TO SERVE (E)CCU-2.
3. DEMOLISH (E) 8"CWR CONDENSER WATER PIPING PREVIOUSLY SERVING CCU-1, AS SHOWN

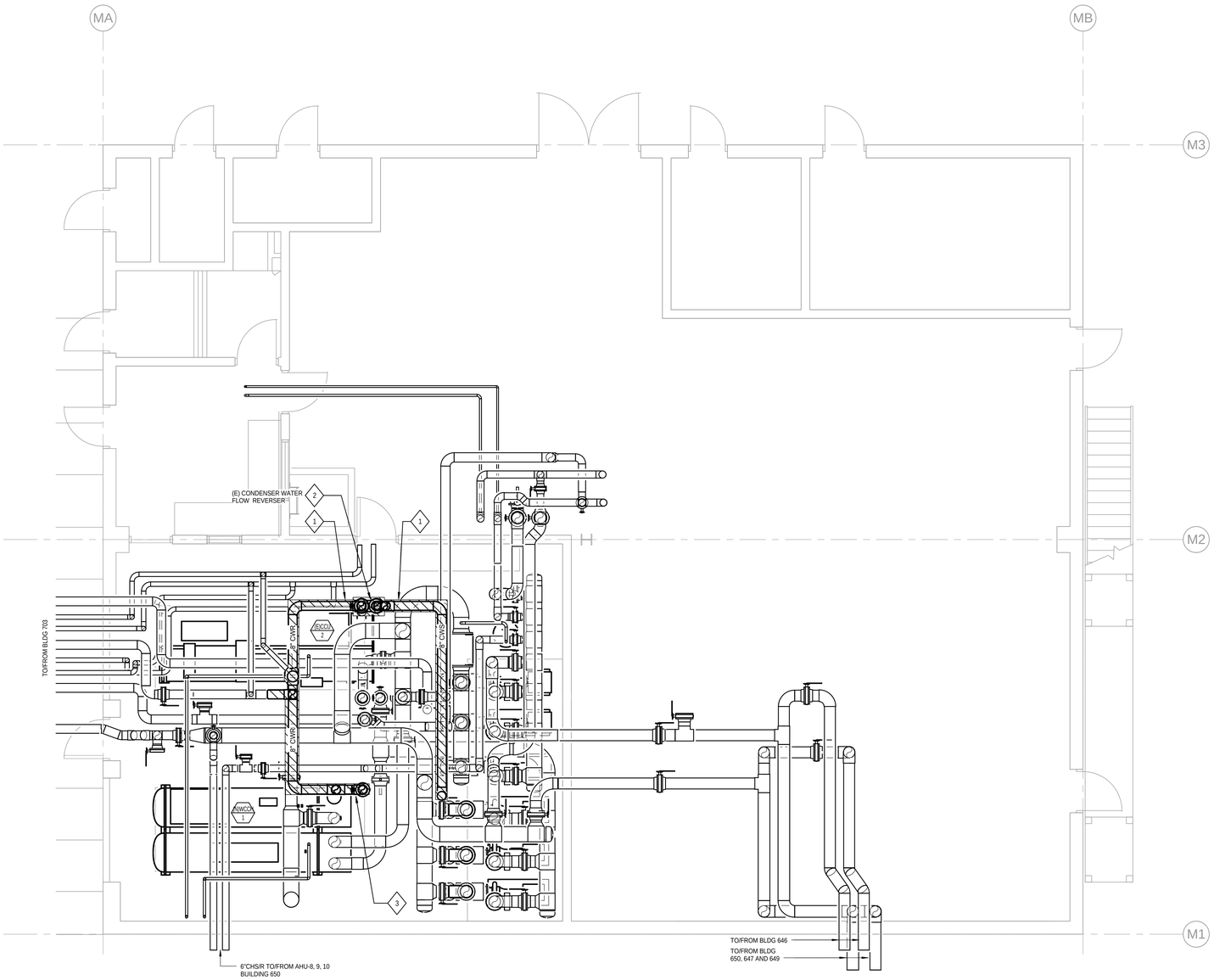

1 MECHANICAL DEMOLITION PLAN PHASE 4 - BLDG 702 - LEVEL 1

1/4" = 1'-0"

NORTH

Revisions:	Date
CONFORMED CONST. DOCUMENTS	07.11.14
CONSTRUCTION DOCUMENTS	06.30.14

CONSULTANTS:

Affiliated Engineers®

Affiliated Engineers W, Inc.
123 Mission Street, 7th Floor
San Francisco, California 94105
415.764.3700

ARCHITECT/ENGINEERS:

Hilliard ARCHITECTS

251 Post Street, Suite 620
San Francisco, CA 94108
Tel 415 989 6400
www.HilliardArchitects.com

Drawing Title: MECHANICAL DEMOLITION PLAN - PHASE 4 - BLDG 702 - LEVEL 1

Approved: Project Director

Project Title: Install New High Efficiency Water Cooled Chiller No. 1

Location: VANCHCS; MATHER, CA

Date: 7.11.2014 | Checked: AEI | Drawn: AEI

Project Number: 612A4-14-006

Building Number: 702

Drawing Number: 702-MD-141

Dwg. of

Office of Construction and Facilities Management

Department of Veterans Affairs

HILLIARD ARCHITECTS INC. COPYRIGHT

7/10/2014 9:48:53 AM

VA FORM 08-6231

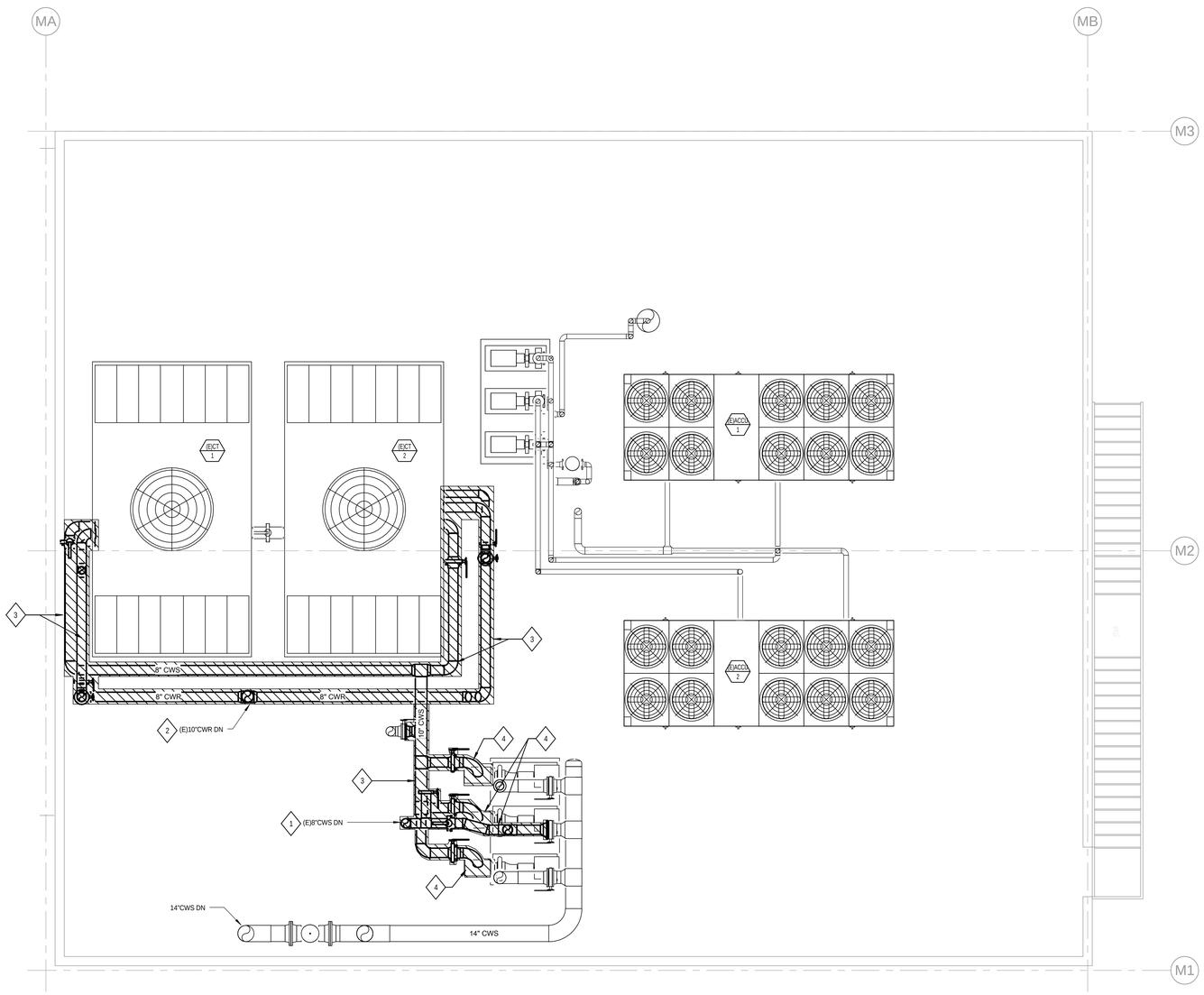

1 MECHANICAL DEMOLITION PLAN PHASE 4 - BLDG 702 - ROOF

1/4" = 1'-0"

DEMOLITION SHEET NOTES

1. DEMOLISH (E)8"CWS DOWN THRU ROOF.
2. DEMOLISH (E)10"CWR DOWN THRU ROOF.
3. DEMOLISH (E) CONDENSER WATER PIPING BACK TO (E)CT-1 AND (E)CT-2 AS SHOWN.
4. DEMOLISH (TEMP) PHASE 1 CROSS-CONNECT AND (TEMP) PHASE 2 PUMP SUCTION PIPING AS SHOWN.

NORTH

HILLIARD ARCHITECTS INC. COPYRIGHT

7/10/2014 9:28:59 AM

Revisions:	Date
CONFORMED CONST. DOCUMENTS	07.11.14
CONSTRUCTION DOCUMENTS	06.30.14
DESIGN DEVELOPMENT 2	06.13.14

VA FORM 08-6231

CONSULTANTS:

Affiliated Engineers®

Affiliated Engineers W, Inc.
123 Mission Street, 7th Floor
San Francisco, California 94105
415.764.3700

ARCHITECT/ENGINEERS:

Hilliard ARCHITECTS

251 Post Street, Suite 620
San Francisco, CA 94108
Tel 415 989 6400
www.HilliardArchitects.com

Drawing Title: MECHANICAL DEMOLITION PLAN PHASE 4 - BLDG 702 - ROOF

Approved: Project Director

Project Title: Install New High Efficiency Water Cooled Chiller No. 1

Location: VANCHCS; MATHER, CA

Date: 7.11.2014 | Checked: AEI | Drawn: AEI

Project Number: 612A4-14-006

Building Number: 702

Drawing Number: 702-MD-142

Dwg. of

Office of Construction and Facilities Management

Department of Veterans Affairs

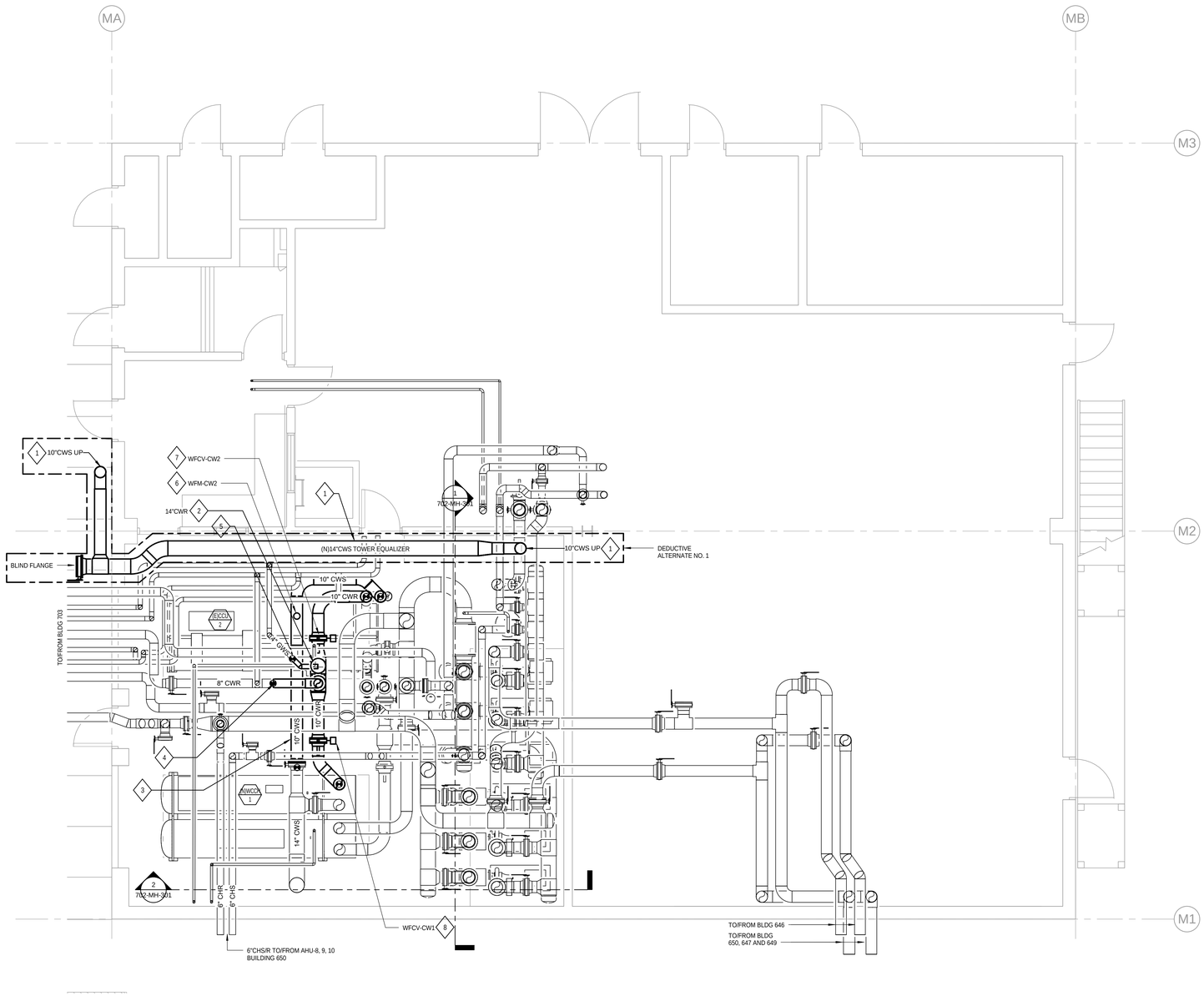

DEMOLITION SHEET NOTES

1. INSTALL (N)14"CWS TOWER EQUALIZER IN CHILLER ROOM. CAP WITH (N) BUTTERFLY VALVE. LOCK VALVE IN CLOSED POSITION AND INSTALL BLIND FLANGE. TO BE PRICED SEPARATELY AS DEDUCTIVE ALTERNATE NO. 1
2. INSTALL (N)14"CWR PIPE FROM ROOF, DOWN INTO CHILLER ROOM AND CONNECTO TO (E)CCU-2 AND (N)WCCH-1.
3. INSTALL (N)10"CWS PIPE TO (E)CCU-2, EXTENDING OFF (N)14"CWS HEADER AND VALVE INSTALLED IN PHASE 1.
4. CONNECT (E)8"CWR FROM BLDG 703 TO NEW 14"CWR HEADER.
5. CONNECT (E)4"GWS PIPE TO (N)14"CWS HEADER.
6. INSTALL WATER FLOW METER WFM-CW2 ON (N)10"CWS PIPE, AS SHOWN.
7. INSTALL WATER FLOW CONTROL VALVE WFCV-CW2 ON (N)10"CWR PIPE, AS SHOWN.
8. INSTALL WATER FLOW CONTROL VALVE WFCV-CW1 ON (N)10"CWR PIPE, AS SHOWN.

1 MECHANICAL HVAC NEW WORK PLAN PHASE 4 - BLDG 702 - LEVEL 1

1/4" = 1'-0"

NORTH

7/10/2014 9:26:55 AM HILLIARD ARCHITECTS INC. COPYRIGHT

Revisions:	Date
CONFORMED CONST. DOCUMENTS	07.11.14
CONSTRUCTION DOCUMENTS	06.30.14

CONSULTANTS:

Affiliated Engineers®

Affiliated Engineers W, Inc.
123 Mission Street, 7th Floor
San Francisco, California 94105
415.764.3700

ARCHITECT/ENGINEERS:

Hilliard ARCHITECTS

251 Post Street, Suite 620
San Francisco, CA 94108
Tel 415 989 6400
www.HilliardArchitects.com

Drawing Title: MECHANICAL HVAC NEW WORK PLAN - PHASE 4 - BLDG 702 - LEVEL 1

Approved: Project Director

Project Title: Install New High Efficiency Water Cooled Chiller No. 1

Location: VANCHCS; MATHER, CA

Date: 7.11.2014 | Checked: AEI | Drawn: AEI

Project Number: 612A4-14-006

Building Number: 702

Drawing Number: 702-MH-141

Dwg. of

Office of Construction and Facilities Management

Department of Veterans Affairs

VA FORM 08-6231

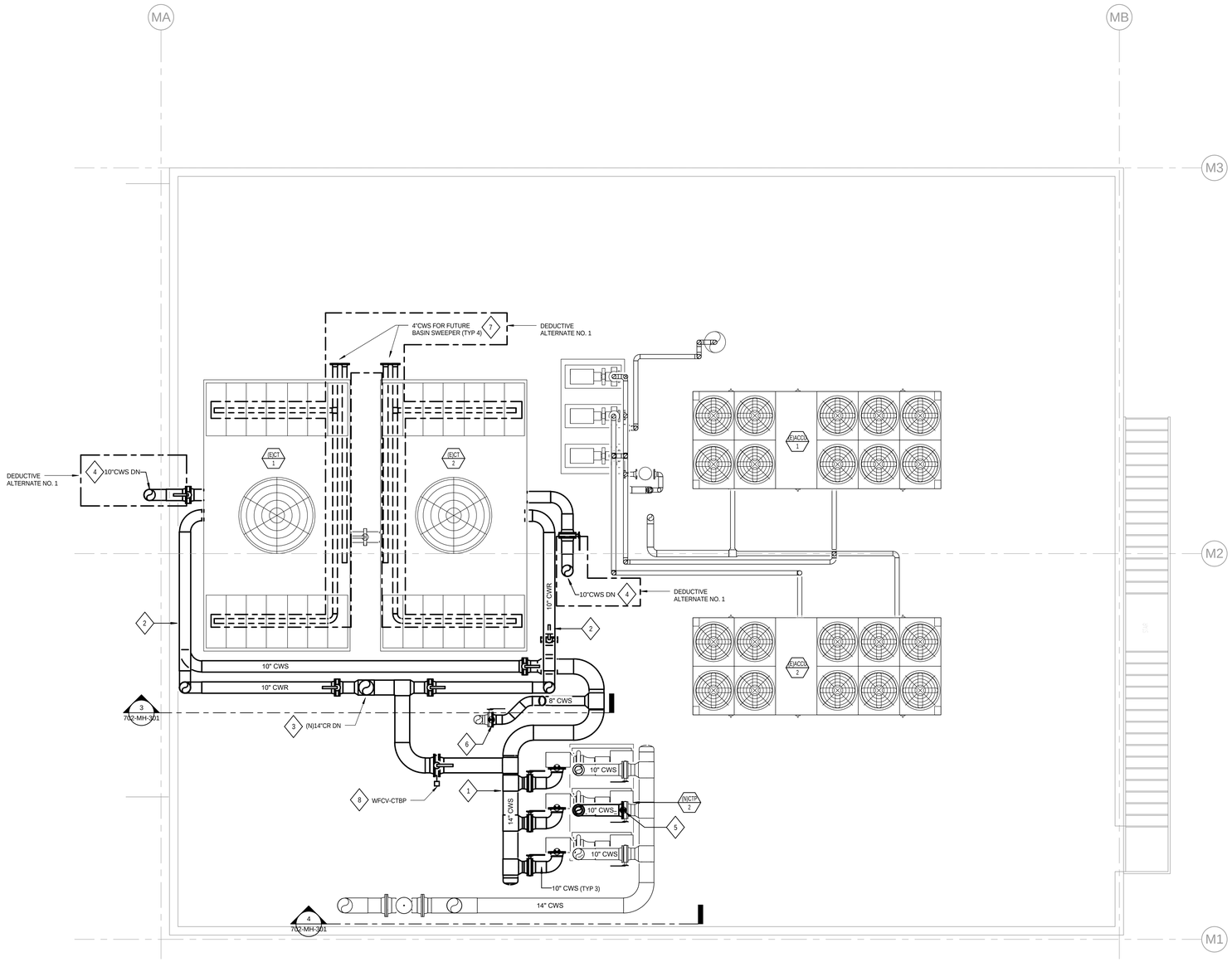

NEW WORK SHEET NOTES

1. INSTALL (N)14"CWS SUCTION HEADER WITH ASSOCIATED SUCTION PIPES TO CT PUMPS.
2. INSTALL NEW CONDENSER WATER PIPING TO COOLING TOWER.
3. INSTALL (N)14"CWR PIPE DROP DOWN THRU ROOF TO SERVE CONDENSER BARREL OF CHILLERS.
4. INSTALL (N)10"CWR EQUALIZER PIPES (TYP 2). TO BE PRICED SEPARATELY AS DEDUCTIVE ALTERNATE NO. 1. INSTALL BLIND FLANGE ON VALVE IF DEDUCTIVE ALTERNATE NO. 1 IS SELECTED.
5. INSTALL (N)10"CWS DISCHARGE PIPE ON (N)CTP-2.
6. CONNECT TO (E)8"CWS BYPASS SERVING CT-3 IN BLDG 703.
7. INSTALL BASIN SWEEPER PIPING SYSTEM FOR FUTURE TOWER FILTRATION SKID. TO BE PRICED SEPARATELY AS DEDUCTIVE ALTERNATE NO. 1.
8. INSTALL (N) CONTROL VALVE WFCV-CTBP ON 14" COOLING TOWER BYPASS PIPE.

1 MECHANICAL HVAC NEW WORK PLAN PHASE 4 - BLDG 702 - ROOF

1/4" = 1'-0"

NORTH

HILLIARD ARCHITECTS INC. COPYRIGHT

7/10/2014 9:22:22 AM

Revisions:	Date
CONFORMED CONST. DOCUMENTS	07.11.14
CONSTRUCTION DOCUMENTS	06.30.14
DESIGN DEVELOPMENT 2	06.13.14

VA FORM 08-6231

CONSULTANTS:

Affiliated Engineers®
Affiliated Engineers W, Inc.
123 Mission Street, 7th Floor
San Francisco, California 94105
415.764.3700

ARCHITECT/ENGINEERS:

Hilliard ARCHITECTS
251 Post Street, Suite 620
San Francisco, CA 94108
Tel 415 989 6400
www.HilliardArchitects.com

Drawing Title: MECHANICAL HVAC NEW WORK PLAN PHASE 4 - BLDG 702 - ROOF

Approved: Project Director

Project Title: Install New High Efficiency Water Cooled Chiller No. 1

Location: VANCHCS; MATHER, CA

Date: 7.11.2014 | Checked: AEI | Drawn: AEI

Project Number: 612A4-14-006

Building Number: 702

Drawing Number: 702-MH-142

Dwg. of

Office of Construction and Facilities Management

Department of Veterans Affairs

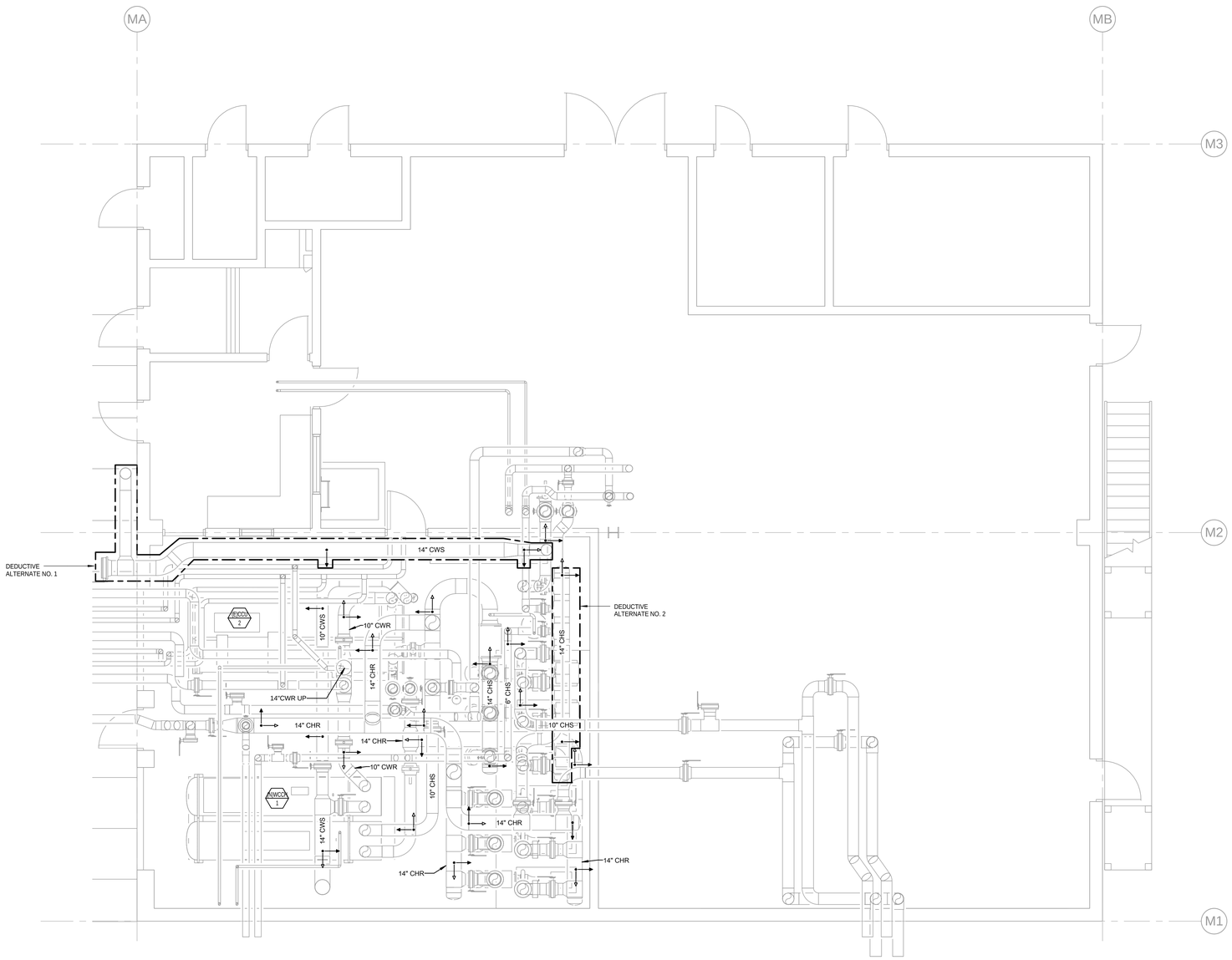

GENERAL NOTES

1. PIPE ANCHORAGE SYMBOLS:
   - TRANSVERSE AND LONGITUDINAL
   - TRANSVERSE ONLY
2. SEE DWG NO MH-501 AND MH-502 FOR PIPE ANCHORAGE DETAILS.

1 MECHANICAL HVAC PIPE ANCHORAGE PLAN - BLDG 702 - LEVEL 1

1/4" = 1'-0"

NORTH

Revisions:	Date
CONFORMED CONST. DOCUMENTS	07.11.14
CONSTRUCTION DOCUMENTS	06.30.14

CONSULTANTS:

Affiliated Engineers W, Inc.
123 Mission Street, 7th Floor
San Francisco, California 94105
415.764.3700

ARCHITECT/ENGINEERS:

Hilliard Architects
251 Post Street, Suite 620
San Francisco, CA 94108
Tel 415 989 6400
www.HilliardArchitects.com

Drawing Title	MECHANICAL HVAC PIPE ANCHORAGE PLAN - BLDG 702 - LEVEL 1
Approved: Project Director	
Project Title	Install New High Efficiency Water Cooled Chiller No. 1
Location	VANCHCS; MATHER, CA
Date	7.11.2014
Checked	AEI
Drawn	AEI
Project Number	612A4-14-006
Building Number	702
Drawing Number	702-MH-151
Dwg. of	

Office of Construction and Facilities Management

Department of Veterans Affairs

7/10/2014 9:22:37 AM HILLIARD ARCHITECTS INC. COPYRIGHT

VA FORM 08-6231

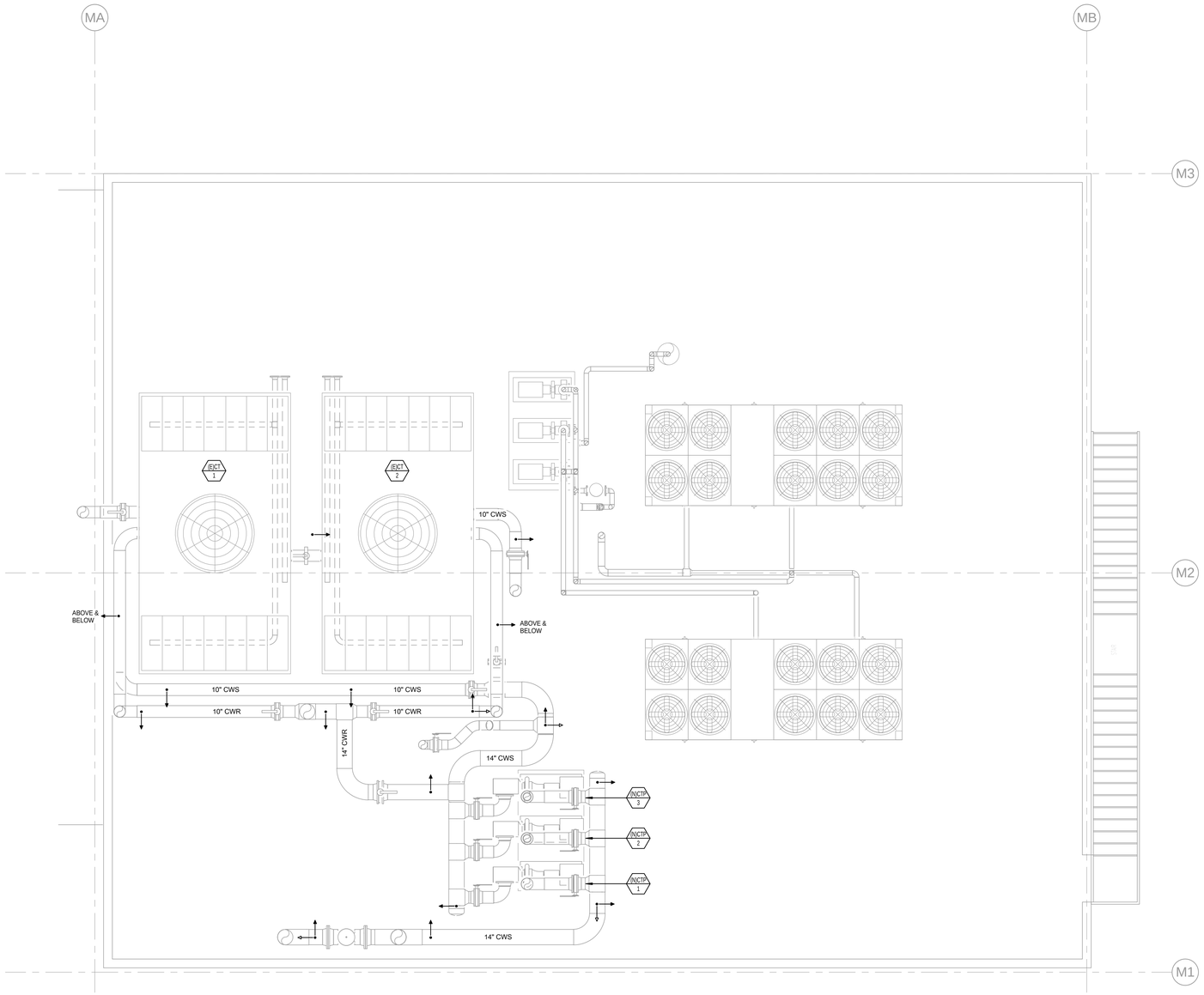

1 MECHANICAL HVAC PIPE ANCHORAGE PLAN - BLDG 702 - ROOF

1/4" = 1'-0"

GENERAL NOTES

1. PIPE ANCHORAGE SYMBOLS:
   - TRANSVERSE AND LONGITUDINAL
   - TRANSVERSE ONLY
2. SEE DWG NO MH-501 AND MH-502 FOR PIPE ANCHORAGE DETAILS.

NORTH

Revisions:	Date
CONFORMED CONST. DOCUMENTS	07.11.14
CONSTRUCTION DOCUMENTS	06.30.14

CONSULTANTS:

Affiliated Engineers®

Affiliated Engineers W, Inc.
123 Mission Street, 7th Floor
San Francisco, California 94105
415.764.3700

ARCHITECT/ENGINEERS:

Hilliard ARCHITECTS

251 Post Street, Suite 620
San Francisco, CA 94108
Tel 415 989 6400
www.HilliardArchitects.com

Drawing Title: MECHANICAL HVAC PIPE ANCHORAGE PLAN - BLDG 702 - ROOF

Approved: Project Director

Project Title: Install New High Efficiency Water Cooled Chiller No. 1

Location: VANCHCS; MATHER, CA

Date: 7.11.2014 | Checked: AEI | Drawn: AEI

Project Number: 612A4-14-006

Building Number: 702

Drawing Number: 702-MH-152

Dwg. of

Office of Construction and Facilities Management

Department of Veterans Affairs

VA FORM 08-6231

7/10/2014 9:22:47 AM HILLIARD ARCHITECTS INC. COPYRIGHT

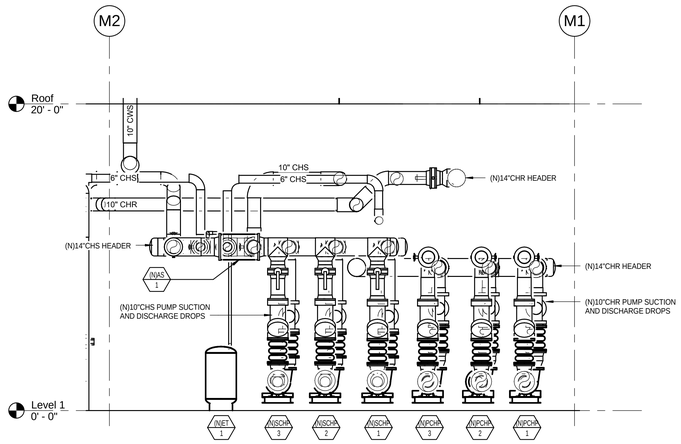

1 MECHANICAL HVAC SECTION - PUMPS IN CHILLER ROOM

1/4" = 1'-0"

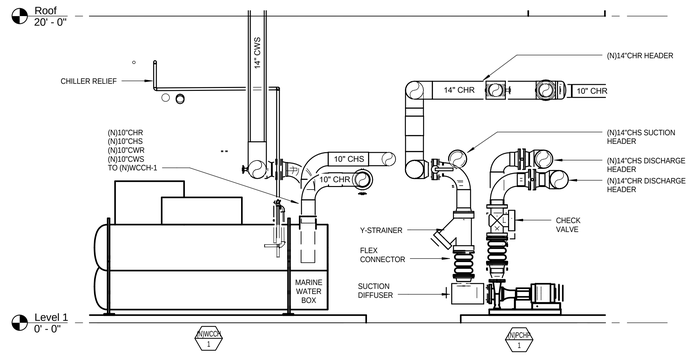

2 MECHANICAL HVAC SECTION - CHILLER AND HEADERS

1/4" = 1'-0"

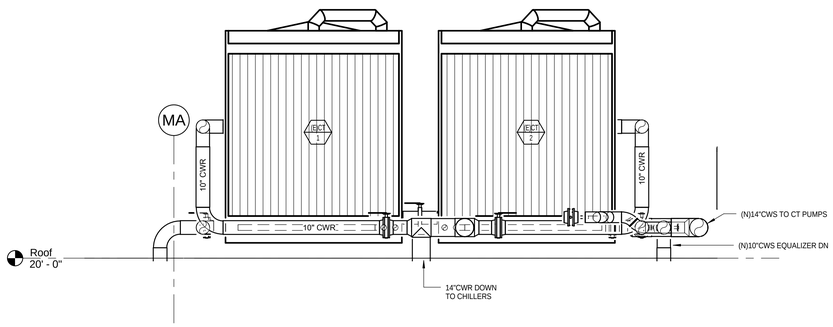

3 MECHANICAL HVAC SECTION - COOLING TOWER PIPING

1/4" = 1'-0"

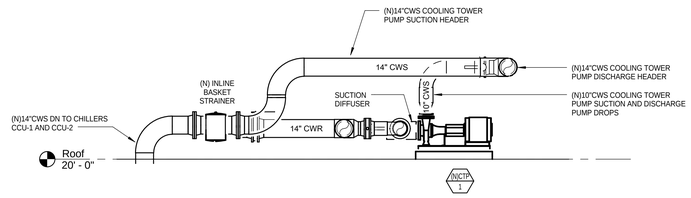

4 MECHANICAL HVAC SECTION - COOLING TOWER PUMPS

1/4" = 1'-0"

Revisions:	Date
CONFORMED CONST. DOCUMENTS	07.11.14
CONSTRUCTION DOCUMENTS	06.30.14
DESIGN DEVELOPMENT 2	06.13.14

CONSULTANTS:

Affiliated Engineers W, Inc.
123 Mission Street, 7th Floor
San Francisco, California 94105
415.764.3700

ARCHITECT/ENGINEERS:

Hilliard ARCHITECTS
251 Post Street, Suite 620
San Francisco, CA 94108
Tel 415 989 6400
www.HilliardArchitects.com

Drawing Title: MECHANICAL HVAC SECTIONS - BLDG 702

Approved: Project Director

Project Title: Install New High Efficiency Water Cooled Chiller No. 1

Location: VANCHCS; MATHER, CA

Date: 7.11.2014 | Checked: AEI | Drawn: AEI

Project Number: 612A4-14-006

Building Number: 702

Drawing Number: 702-MH-301

Dwg. of

Office of Construction and Facilities Management

Department of Veterans Affairs

VA FORM 08-6231

7/10/2014 9:23:01 AM HILLIARD ARCHITECTS INC. COPYRIGHT

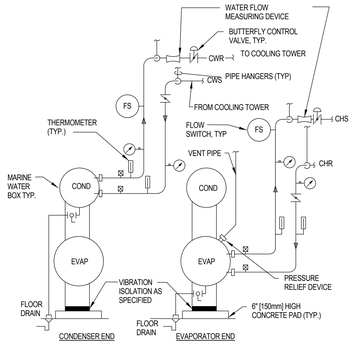

NOTE:

1. DRAIN ALL LOW POINTS OF SYSTEMS TO NEAREST FLOOR DRAIN.
2. PROVIDE MARINE WATER BOXES FOR BOTH CONDENSER AND EVAPORATOR.
3. COLLECT VENT PIPES FROM ALL REFRIGERANT PRESSURE RELIEF DEVICES AND EXTEND TO EXTERIOR OF BUILDING IN ACCORDANCE WITH ASHRAE STANDARD 15. HEADER SIZE TO EQUAL OR EXCEED TOTAL AREA OF DEVICES CONNECTED TO THE HEADER.
4. PROVIDE MODULATING BUTTERFLY VALVES ON BOTH CHWR & CWR. VALVES CONTROLLED BY ECC.
5. FOR PIPING 6" AND BELOW, MECHANICAL COUPLINGS ARE OPTIONAL. ABOVE 6", WELDED PIPE WITH FLANGES IS THE ONLY APPROVED JOINING METHOD.

10 WATER COOLED CHILLER - PIPING CONNECTIONS

NTS

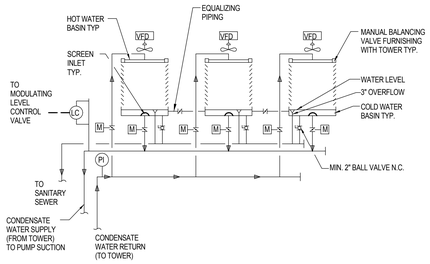

NOTE:

1. THE BASINS SHALL BE INTERCONNECTED BY FLUMES. EACH CELL SHALL BE PROVIDED WITH ITS OWN SUMP AND ANTI-CAVITATION PLATE.

7 MULTIPLE CELL COOLING TOWER - PIPING CONNECTIONS

NTS

DESIGNERS NOTES:
1. IF TOWER IS INSTALLED MORE THAN 5 FT [1500 MM] ABOVE THE ROOF OR GRADE PROVIDE A PLATFORM AROUND THE PERIMETER.
2. PROVIDE ACCESS FOR ALL ELEVATED VALVES AND CONTROL DEVICES AND TO EACH FAN MOTOR.
3. SEE HVAC DESIGN MANUAL.
4. COORDINATE WITH ELECTRICAL ON BASIN HEATER.

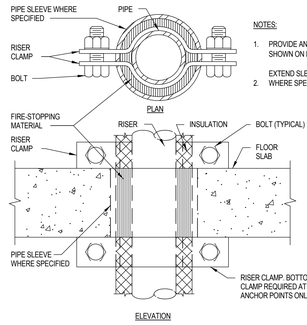

NOTES:

1. PROVIDE ANCHORS ONLY WHERE SHOWN ON DRAWINGS.
2. EXTEND SLEEVE ABOVE FLOOR WHERE SPECIFIED.

4 SUPPORT/ANCHOR FOR PIPE RISERS

NTS

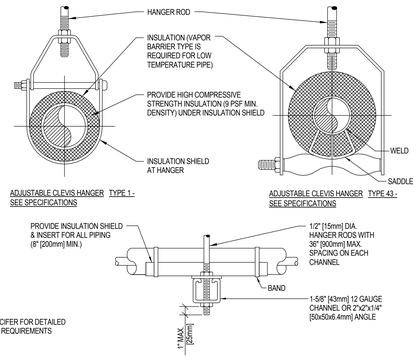

NOTES:
SEE SPECIFER FOR DETAILED HANGER REQUIREMENTS

SIDE VIEW TRAPEZE HANGER FOR UP TO 1000 LB. [453KG] UNIFORM LOAD

MAXIMUM PIPE/TUBING SUPPORT SPACING																			
NOM. SIZE	IN. [mm]	THRU 3/4 THRU [20]	1 [25]	1 1/4 [32]	1 1/2 [40]	2 [50]	2 1/2 [65]	3 [75]	4 [100]	5 [125]	6 [150]	8 [200]	10 [250]	12 [300]	14 [350]	16 [400]	18 [450]	20 [500]	24 [600]
PIPE	FT. [mm]	7 [2100]	7 [2100]	7 [2100]	9 [2700]	10 [3000]	11 [3400]	12 [3700]	14 [4100]	16 [4900]	17 [5200]	19 [5800]	22 [6700]	23 [7000]	25 [7600]	27 [8200]	28 [8500]	30 [9100]	32 [9600]
TUBING	FT. [mm]	5 FT [1500]	6 [1800]	7 [2100]	8 [2400]	8 [2400]	9 [2700]	10 [3000]	12 [3700]	13 [4000]	14 [4100]	16 [4900]	-	-	-	-	-	-	-

NOTE: FOR TRAPEZE HANGER TAKE SPACING OF SMALLEST SIZE ON TRAPEZE.

DESIGNER'S NOTE:
SHOW ON THE DRAWINGS OTHER SPECIFIED AND SPECIAL PIPE SUPPORTS WHERE REQUIRED.

1 PIPE HANGERS

NTS

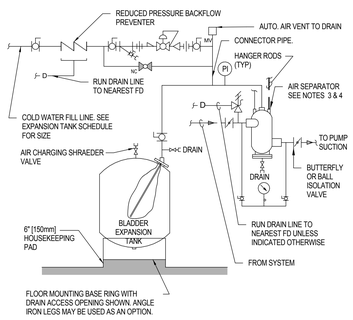

NOTE:

1. SEE EXPANSION TANK SYSTEM SCHEDULE FOR COMPONENT SIZES.

   FOR HOT WATER SYSTEMS 2" [50mm] AND SMALLER AND CHILLED WATER SYSTEMS USE IN-LINE AIR PURGER IN LIEU OF AIR SEPARATOR.

   SET PRESSURE REDUCING VALVE SO PRESSURE AT HIGHEST POINT IN SYSTEM
3. HAS A MINIMUM OF 4 PSIG [28kPa].

11 FLOOR MOUNTED EXPANSION TANK - PIPING CONNECTIONS

NTS

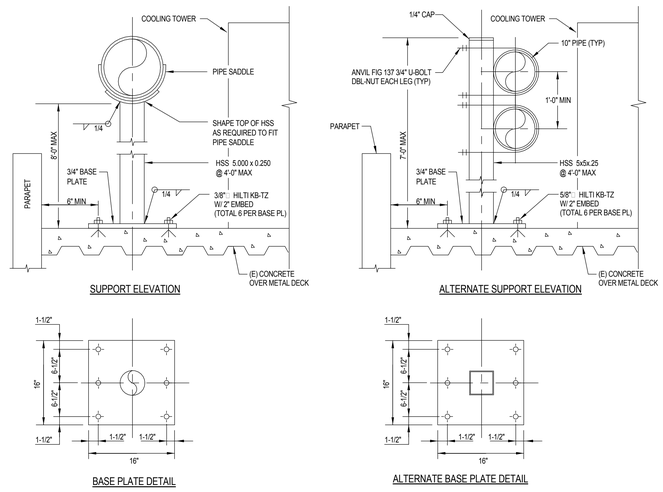

8 PIPE SUPPORT ON ROOF - ALTERNATE

NTS

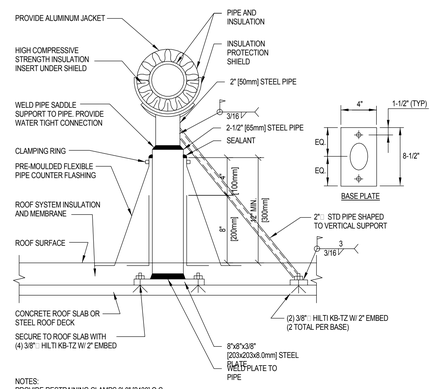

NOTES:
PROVIDE RESTRAINING CLAMPS 8'-0" [2438] O.C.

5 DETAIL FOR SUPPORTING PIPE ON ROOF

NTS

PIPE ANCHOR SCHEDULE																
D		L		P		T		E		N		S		BOLT PATTERN
IN	MM	IN	MM	IN	MM	IN	MM	IN	MM	IN	MM	IN	MM			
6"	152	8 1/4"	216	3/4"	19	3/8"	10	1/2"	6	4"	102	3/4"	22			
8"	203	10"	254	3/4"	19	1/2"	13	1/2"	6	4"	102	3/4"	22			
10"	254	12"	305	3/4"	19	1/2"	13	1/2"	6	4"	102	3/4"	22			
12"	305	14"	356	3/4"	19	1/2"	13	1/2"	6	4"	102	3/4"	22			
14"	356	16"	406	3/4"	19	1/2"	13	1/2"	13	4"	102	3/4"	22			
16"	406	18"	457	3/4"	19	1/2"	13	1/2"	13	4"	102	3/4"	22			
18"	457	20"	508	1"	25	5/8"	16	1/2"	13	6"	152	1"	25			

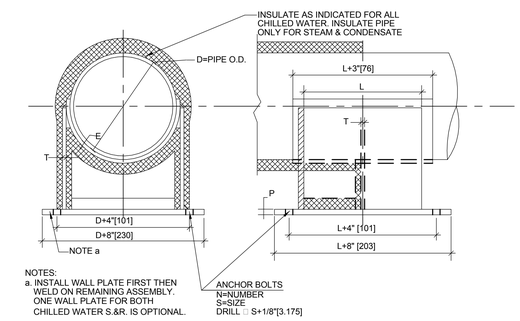

NOTES:
a. INSTALL WALL PLATE FIRST THEN WELD ON REMAINING ASSEMBLY. ONE WALL PLATE FOR BOTH CHILLED WATER S.&R. IS OPTIONAL.

2 LARGE PIPE ANCHOR 6" -18"

NTS

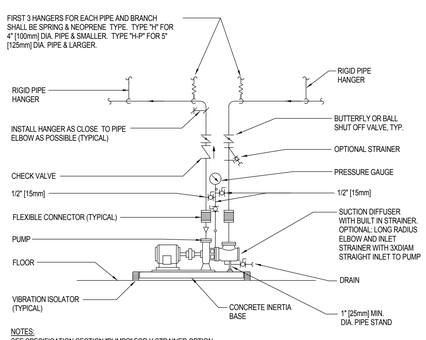

NOTES:
SEE SPECIFICATION SECTION "PUMPS" FOR Y STRAINER OPTION

12 SINGLE SUCTION FLOOR-MOUNTED PUMPS - CONNECTIONS WITH FLEXIBLE CONNECTORS

NTS

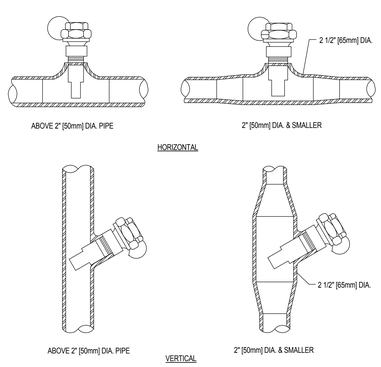

9 INSTALLATION OF THERMOMETER WELLS

NTS

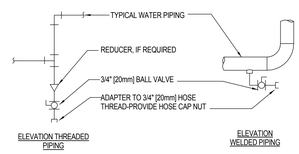

TYPICAL CHILLED AND HOT WATER PIPING DRAIN VALVE CONNECTIONS

NOTES:
1. DRAIN ALL LOW POINTS AS INDICATED ABOVE.

2. WHERE SCALE POCKETS ARE SHOWN ON PIPE RISER DIAGRAMS AND/OR PLANS LOCATE DRAIN AT BOTTOM OF SCALE POCKET.

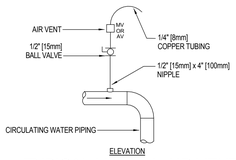

TYPICAL MANUAL AIR VENT

NOTES:
1. VENT ALL HIGH POINTS INDICATED ABOVE.
2. IF AUTOMATIC AIR VENTS ARE USED, PIPE DISCHARGE TO DRAIN.

6 DRAIN VALVE AND AIR VENT CONNECTIONS (HYDRONIC SYSTEMS)

NTS

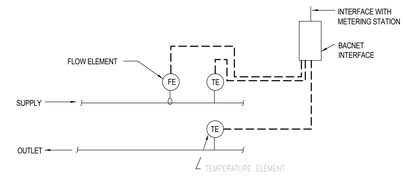

NOTE:

1. MAINTAIN UPSTREAM AND DOWN STREAM DISTANCES RECOMMENDED BY METER MANUFACTURES

3 WATER FLOW MEASURING STATION (WITH BTU METER)

NTS

Revisions:	Date
CONFORMED CONST. DOCUMENTS	07.11.14
CONSTRUCTION DOCUMENTS	06.30.14
DESIGN DEVELOPMENT 2	06.13.14

CONSULTANTS:

Affiliated Engineers®

Affiliated Engineers W, Inc.
123 Mission Street, 7th Floor
San Francisco, California 94105
415.764.3700

ARCHITECT/ENGINEERS:

Hilliard ARCHITECTS

251 Post Street, Suite 620
San Francisco, CA 94108
Tel 415 989 6400
www.HilliardArchitects.com

Drawing Title: MECHANICAL HVAC DETAILS - BLDG 702

Approved: Project Director

Project Title: Install New High Efficiency Water Cooled Chiller No. 1

Location: VANCHCS; MATHER, CA

Date: 7.11.2014 | Checked: AEI | Drawn: AEI

Project Number: 612A4-14-006

Building Number: 702

Drawing Number: MH-501

Dwg. of

Office of Construction and Facilities Management

Department of Veterans Affairs

VA FORM 08-6231

7/10/2014 9:24:07 AM HILLIARD ARCHITECTS INC. COPYRIGHT

	Wedge		Sleeve		Shell	
Diameter (in.)	Load (lb)	Torque[10] (ft-lb)	Load (lb)	Torque[10] (ft-lb)	Load (lb)	Torque[10] (ft-lb)
1/4	800	10	400	4	1000	----
5/16	----	----	400	5	1400	----
3/8	1100	25	700	10	1800	----
1/2	2000	50	900	20	2700	----
5/8	2300	80	1100	45	3700	----
3/4	3700	150	1400	90	5400	----
7/8	5800	250	----	----	----	----

Table 8-2 Test Values - Hardrock or Lightweight Concrete

NOTES:

1. Anchor diameter refers to the thread size for the WEDGE & SHELL categories and to the anchor outside diameter for the sleeve category.
2. Apply proof test loads to WEDGE & SLEEVE anchors without removing the nut if possible. If not, remove nut and install a threaded coupler to the same tightness of the original nut using a torque wrench and apply load.
3. For SLEEVE/SHELL internally threaded categories, verify that the anchor is not prevented from withdrawing by a baseplate or other fixtures. If restraint is found, loosen and shim or remove fixture(s) prior to testing.
4. Reaction loads from test fixtures may be applied close to the anchor being tested, provided the anchor is not restrained from withdrawing by the fixture(s).
5. SHELL type anchors should be tested as follows:
   a. Visually inspect 25% for full expansion as evidenced by the location of the expansion plug in the anchor body. Plug location of a fully expanded anchor should be as recommended by the manufacturer, or in the absence of such recommendation, as determined on the job site following the manufacturer's installation instructions;
   b. Proof load 5% as indicated in the table above, but not less than three anchors per day for each different person or crew installing anchors;
   c. Test 50% of the installed anchors per 2624(d).
6. Test equipment is to be calibrated by an approved testing laboratory in accordance with standard recognized procedures.
7. Torque test values for SHELL type anchors are omitted due to a lack of data. Torque testing can occur on an individual basis when test procedures are submitted and approved by the enforcement agency. Tabulated values may be forthcoming once the enforcement agency has more data to evaluate the feasibility of standard torque values.
8. The following criteria apply for the acceptance of installed anchors:
   HYDRAULIC RAM METHOD: The anchor should have no observable movement at the applicable test load. For wedge and sleeve type anchors, a practical way to determine observable movement is that the washer under the nut becomes loose.
   TORQUE WRENCH METHODS: The applicable test torque must be reached within the following limits:
   Wedge or Sleeve Type: One-half (½) turn of the nut.
   One-quarter (¼) turn of the nut for the 3/8 in. sleeve anchor only.
9. Testing should occur 24 hours minimum after installation of the subject anchors.
10. The test torque shall not exceed the manufacturer's recommended installation torque.
11. Table courtesy of California Office of Statewide Health Planning and Development (OSHPD).

Pipe Size[1] (in.)	Max. Wt. (lb per ft)	Brace Spacing (ft) note[2]	Brace Spacing (ft) note[3]	Vertical Hangers[4] Angles (in.)	Transverse Braces Angles (Cable Size) (in.)	Longitudinal Braces Angles[5] (Cable Size) (in.)	Bolt Size[6] (in.)	Connection Type to Structural Member[7]	Rod Size (in.)	Max. Length for Rods (in.)
2½	7.9	40	80	2×2×16ga	2½×2½×16ga (¼ in. cable)	2½×2½×16ga (¼ in. cable)	⅜	A	½	25
3	10.8	40	80	2×2×16ga	2½×2½×16ga (¼ in. cable)	2½×2½×16ga (¼ in. cable)	⅜	B	½	25
4	16.3	40	80	2×2×16ga	2½×2½×16ga (¼ in. cable)	2½×2½×16ga (¼ in. cable)	⅜	C	⅝	31
5	23.3	40	80	2×2×16ga	2½×2½×16ga (¼ in. cable)	2½×2½×12ga (¼ in. cable)	⅜	D	⅝	31
6	31.5	40	80	2×2×16ga	2½×2½×16ga (¼ in. cable)	2½×2½×12ga (¼ in. cable)	½	E	¼	37
8	50.3	40	80	2×2×16ga	2½×2½×12ga (¼ in. cable)	2½×2½×12ga (¼ in. cable)	½	F	⅞	43
10	74.7	40	80	2×2×16ga	2½×2½×12ga (¼ in. cable)	2½×2½×12ga (¼ in. cable)	⅝	G	⅞	43
12	98.6	40	40	2½×2½×12ga	3×3×12ga (⅜ in. cable)	3×3×12ga (¼ in. cable)	½	F	⅞	43
14	122	40	40	2½×2½×12ga	4×4×12ga (⅜ in. cable)	3×3×12ga (¼ in. cable)	⅝	F	⅞	43
16	159	40	40	2½×2½×12ga	3×3×¼ (¼ in. cable)	3×3×12ga (⅜ in. cable)	¾	G	⅞	43

Table 6-7 Schedule for Bracing Pipes and Conduit, SHL B

NOTES:

1. Applies to pipe conduit.
2. Transverse brace spacing.
3. Longitudinal brace spacing.
4. The vertical hanger in the schedule is required in addition to the hanger rod only when the maximum length for rods is exceeded.
5. See general requirements for longitudinal diagonal brace requirement.
6. Place standard flat washers between sheet metal angles and nut.
7. See Table 8-1 for "Connection Type" to structural supporting members.
8. Framing Channel may be used as an alternative to the structural members in the table.

Type	Max. Load Capacity (lb)[2]	Expansion Anchors to Concrete[3,4,5] (in.)	Machine Bolt End of Brace (in.)	Spreader Size (in.)	Machine Bolt at Wood[6] (in.)	Hollow Core Plank Rod (in.)	Angle to Supporting Structural Member[7]
A	1040	½	⅜	C4×5.4	½	⅜	3½×2½×3(x0 ft, 3 in. LLH
B	1415	⅝	⅜	C4×5.4	⅝	⅜	5×3×3(x0 ft, 3 in. LLH
C	1586	2–½	½	C5×6.7	¾	⅜	2–4×3×3(x0 ft, 4 in. LLH
D	2020	2–⅝	½	C6×8.5	note[8]	½	2–5×3×3(x0 ft, 4 in. LLH
E	2870	2–¾	⅝	C8×11.5	note[8]	½	2–6×3½×3(x0 ft, 4 in. LLH
F	4600	4–⅝	¾	C9×13.4	note[8]	note[8]	2–5×3×3(x0 ft, 10 in. LLH
G	7040	4–¾	⅞	C10×15.3	note[8]	note[8]	2–6×3½×½x0 ft, 11½ in. LLH
H	9240	4–⅞	1	C12×20.7	note[8]	note[8]	2–8×4×¾×1 ft, 1½ in. LLH

Table 8-1 Schedule for Typical Connections to Structural Supporting Members[1]

NOTES:

1. It is the responsibility of the mechanical engineer to provide sufficient mechanical data to the structural engineer so that the structural engineer can design the structure to support the weight of the mechanical system.
2. Maximum load capacity is for general information only and the maximum member force in the bracing system used in this manual. A designer may use this force to design a special connection if required.
3. For slabs less than 5 in. thick, thin slab inserts may be used.
4. Expansion anchors will be installed per the requirements given in the latest governing authority research report for the specific anchor. Also, see the requirements in Chapter 3 of these guidelines.
5. For essential facilities, 50% of the expansion type anchors (alternate anchors in any group arrangement) will be proof tested in accordance with Table 8-2. If any anchor fails, the immediately adjacent anchors must then also be tested.
6. Machine bolts into 6x wood members unless shown otherwise on the details.
7. LLH = long leg horizontal.
8. Must be engineered individually.

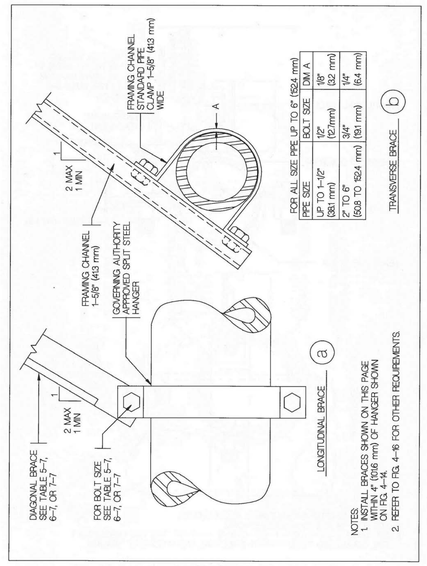

FIGURE 4-17 ALTERNATE BRACING FOR PIPES

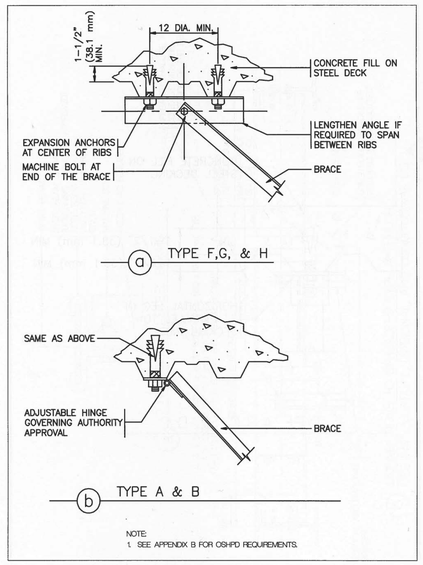

FIGURE 8-6 CONNECTIONS TO CONCRETE FILL ON STEEL DECK

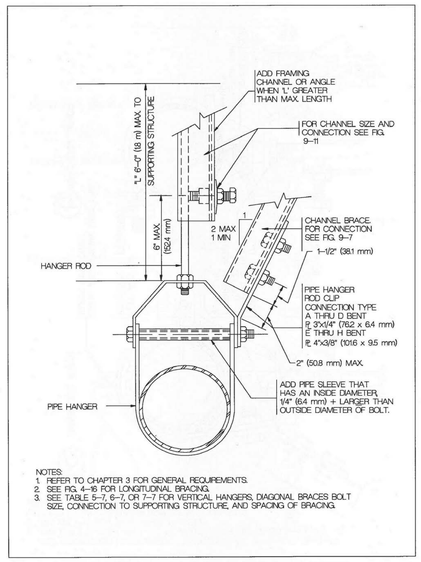

FIGURE 4-14 STRUT BRACING FOR PIPES

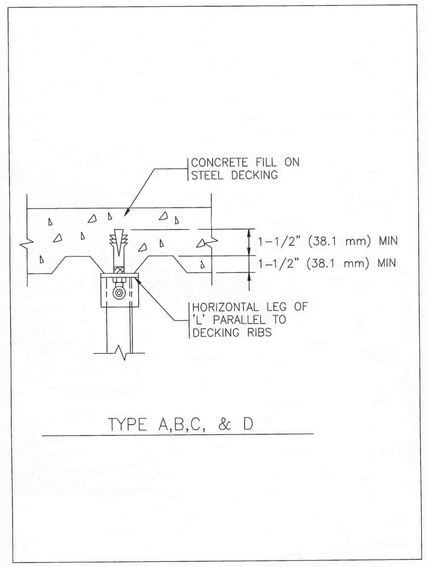

FIGURE 8-7 CONNECTIONS TO CONCRETE

7/10/2014 9:24:25 AM HILLIARD ARCHITECTS INC. COPYRIGHT

Revisions:	Date
CONFORMED CONST. DOCUMENTS	07.11.14
CONSTRUCTION DOCUMENTS	06.30.14
DESIGN DEVELOPMENT 2	06.13.14

CONSULTANTS:

Affiliated Engineers®

Affiliated Engineers W, Inc.
123 Mission Street, 7th Floor
San Francisco, California 94105
415.764.3700

ARCHITECT/ENGINEERS:

Hilliard ARCHITECTS

251 Post Street, Suite 620
San Francisco, CA 94108
Tel 415 989 6400
www.HilliardArchitects.com

Drawing Title: MECHANICAL HVAC DETAILS - BLDG 702

Approved: Project Director

Project Title: Install New High Efficiency Water Cooled Chiller No. 1

Location: VANCHCS; MATHER, CA

Date: 7.11.2014 | Checked: AEI | Drawn: AEI

Project Number: 612A4-14-006

Building Number: 702

Drawing Number: MH-502

Dwg. of

Office of Construction and Facilities Management

Department of Veterans Affairs

VA FORM 08-6231

GENERAL NOTES

1. PHASING OF DEMOLITION WORK IS NOT INDICATED ON THIS DIAGRAM. REFER TO INDIVIDUAL DEMOLITION SHEETS FOR ACTUAL PHASING SEQUENCE.

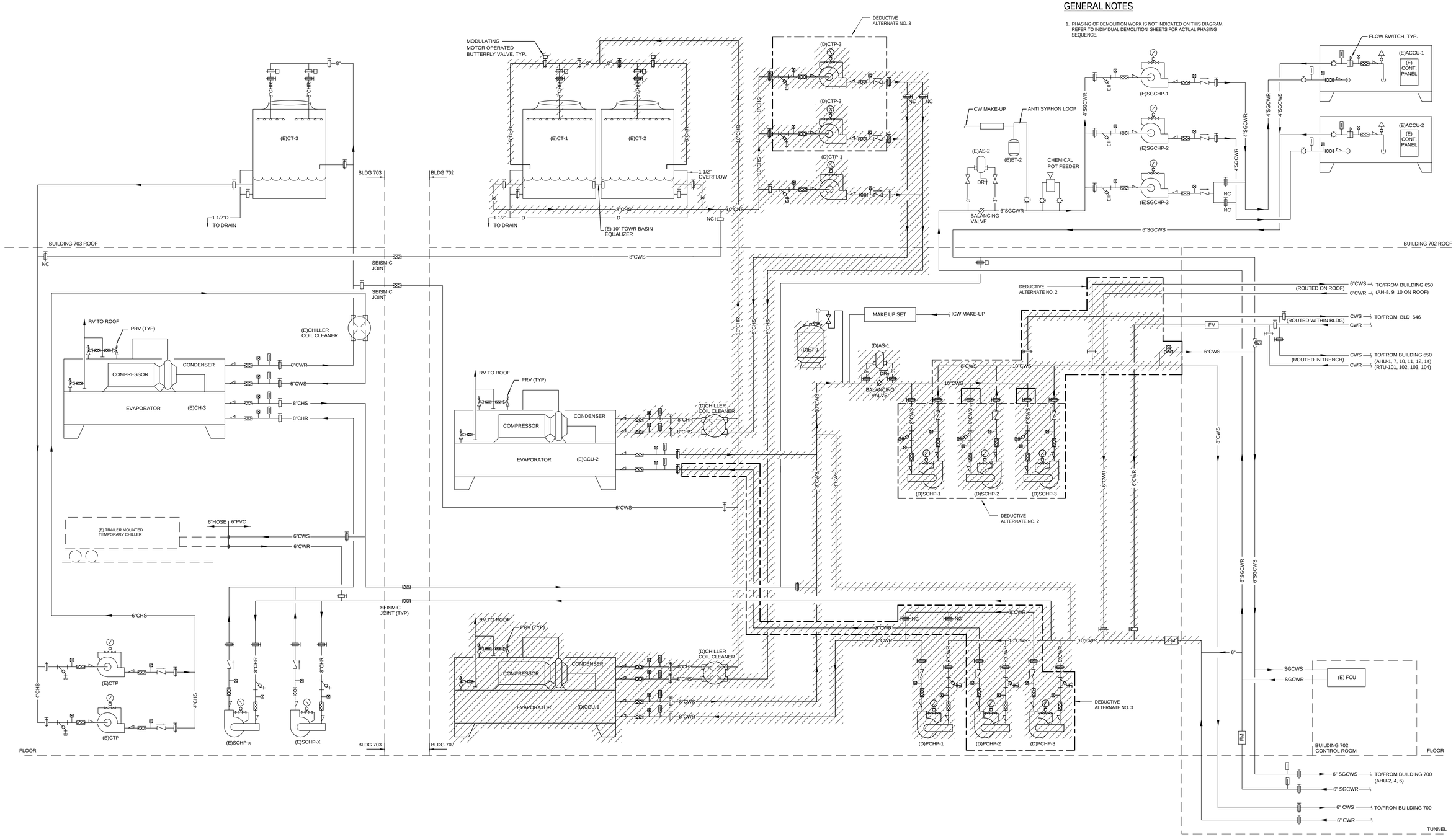

1 MECHANICAL PIPING DEMOLITION DIAGRAM - BLDG 702, 703

12" = 1'-0"

Revisions:	Date
CONFORMED CONST. DOCUMENTS	07.11.14
CONSTRUCTION DOCUMENTS	06.30.14
DESIGN DEVELOPMENT 2	06.13.14

CONSULTANTS:

Affiliated Engineers®

Affiliated Engineers W, Inc.
123 Mission Street, 7th Floor
San Francisco, California 94105
415.764.3700

ARCHITECT/ENGINEERS:

Hilliard ARCHITECTS

251 Post Street, Suite 620
San Francisco, CA 94108
Tel 415 989 6400
www.HilliardArchitects.com

Drawing Title	MECHANICAL DEMOLITION DIAGRAM - BLDG 702, 703
Approved: Project Director	
Project Title	Install New High Efficiency Water Cooled Chiller No. 1
Project Number	612A4-14-006
Building Number	702,703
Location	VANCHCS; MATHER, CA
Date	7.11.2014
Checked	AEI
Drawn	AEI
Drawing Number	MD-601
Dwg. of	

Office of Construction and Facilities Management

Department of Veterans Affairs

HILLIARD ARCHITECTS INC. COPYRIGHT

7/10/2014 9:23:56 AM

VA FORM 08-6231

GENERAL NOTES

1. PHASING OF NEW WORK IS NOT INDICATED ON THIS DIAGRAM. REFER TO INDIVIDUAL HVAC NEW WORK SHEETS FOR ACTUAL PHASING SEQUENCE.
2. VALVES ARE NORMALLY OPEN, UNLESS DESIGNATED OTHERWISE.

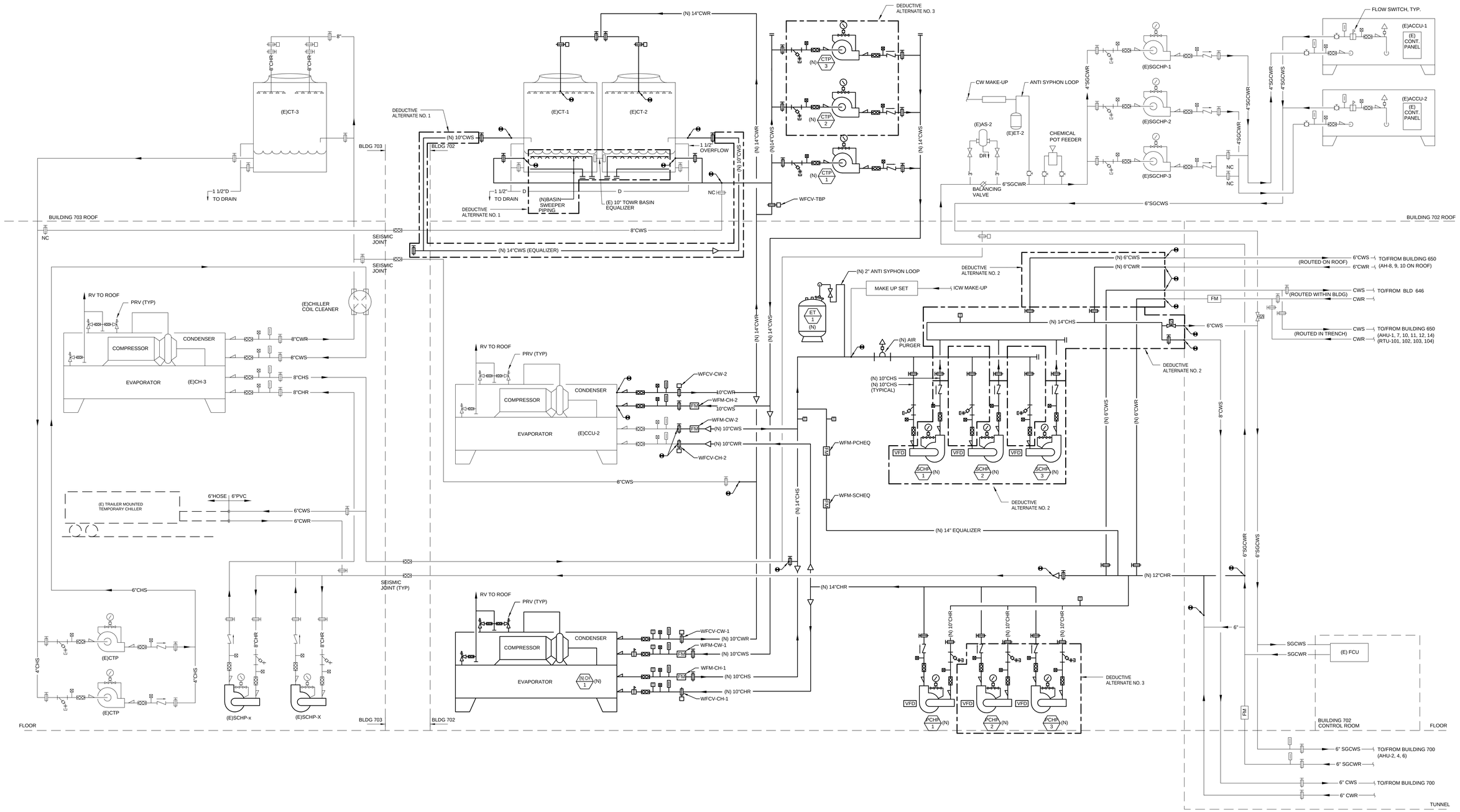

1 MECHANICAL PIPING DIAGRAM - BLDG 702, 703

12" = 1'-0"

Revisions:	Date
CONFORMED CONST. DOCUMENTS	07.11.14
CONSTRUCTION DOCUMENTS	06.30.14
DESIGN DEVELOPMENT 2	06.13.14

CONSULTANTS:

Affiliated Engineers W, Inc.
123 Mission Street, 7th Floor
San Francisco, California 94105
415.764.3700

ARCHITECT/ENGINEERS:

Hilliard Architects
251 Post Street, Suite 620
San Francisco, CA 94108
Tel 415 989 6400
www.HilliardArchitects.com

Drawing Title: MECHANICAL HVAC DIAGRAM - BLDG 702, 703

Approved: Project Director

Project Title: Install New High Efficiency Water Cooled Chiller No. 1

Location: VANCHCS; MATHER, CA

Date: 7.11.2014 | Checked: AEI | Drawn: AEI

Project Number: 612A4-14-006

Building Number: 702,703

Drawing Number: MH-601

Dwg. of

Office of Construction and Facilities Management

Department of Veterans Affairs

VA FORM 08-6231

HILLIARD ARCHITECTS INC. COPYRIGHT

7/10/2014 9:24:33 AM

COOLING TOWER SCHEDULE

MARK	LOCATION	SERVICE	TOWER TYPE	TOTAL NOMINAL CAPACITY TONS	TOTAL NOMINAL CAPACITY [kW]	# CELLS	FLOW RATE EACH CELL GPM	FLOW RATE EACH CELL [L/s]	WPD FT	WPD [kPa]	TEMPERATURE AMBIENT Wb °F	TEMPERATURE AMBIENT Wb [°C]	TEMPERATURE EWT °F	TEMPERATURE EWT [°C]	TEMPERATURE LWT °F	TEMPERATURE LWT [°C]	FAN MOTOR NO	FAN MOTOR POWER HP	FAN MOTOR POWER [kW]	FAN MOTOR PHASE	FAN MOTOR VOLT	FAN MOTOR RPM	FAN MOTOR SPEED CONTROL	SUMP HEATER TYPE	SUMP HEATER CAPACITY BTUH	SUMP HEATER CAPACITY [W]	MAX OPERATING WEIGHT LB	MAX OPERATING WEIGHT [kg]	MAX HEIGHT W/HANDRAIL FT	MAX HEIGHT W/HANDRAIL [M]	REMARKS
(E) 702-CT1	BLDG 702 ROOF	CONDENSER WATER	CROSS FLOW	537.5	[150]	1	1290	[81]	11.5	[34]	75	[24]	90	[32]	80	[27]	1	40	[30]	3	460	1775	VARIABLE	N/A		[ ]	24650	[11000]	15	[5]	BAC 33604A-2
				875	[250]		2100	[130]					95	[35]	85	[29]															
(E) 702-CT1	BLDG 702 ROOF	CONDENSER WATER	CROSS FLOW	537.5	[150]	1	1290	[81]	11.5	[34]	75	[24]	90	[32]	80	[27]	1	40	[30]	3	460	1775	VARIABLE	N/A		[ ]	24650	[11000]	15	[5]	BAC 33604A-2
				875	[250]		2100	[130]					95	[35]	85	[29]															
(E) 703-CT3	BLDG 703 ROOF	CONDENSER WATER	CROSS FLOW	537.5	[150]	1	1290	[81]		[ ]	75	[24]	90	[32]	80	[27]	1	40	[30]	3	460		VARIABLE	N/A		[ ]	25325	[11000]	17.5	[5]	ACT ACX-212-22H-1
					[ ]			[ ]		[ ]									[ ]							[ ]			[ ]		

NOTES

1. DURING PHASE 4, WHEN COOLING TOWER 1 AND 2 ARE OUT OF SERVICE, INSTALL BASIN SWEEPER PIPING SYSTEM FOR FUTURE FILTRATION SKID.

AIR COOLED CHILLER SCHEDULE

MARK	LOCATION	AREA AND/OR BLDG SERVED	TYPE	CAPACITY TONS	CAPACITY [kW]	# OF COMP	MAX kW/TON	MIN COP	MAX IPLV (kW/TON)	EVAPORATOR FLOW GPM	EVAPORATOR FLOW [L/s]	EVAPORATOR EWT °F	EVAPORATOR EWT [°C]	EVAPORATOR LWT °F	EVAPORATOR LWT [°C]	EVAPORATOR MAX WPD FT	EVAPORATOR MAX WPD [kPa]	FOULING FACTOR	CONDENSER AMBIENT OA TEMP °F	CONDENSER AMBIENT OA TEMP [°C]	ELECTRICAL COMPRESSOR MOTOR # COMP	COMPRESSOR MOTOR HP	COMPRESSOR MOTOR [kW]	COMPRESSOR MOTOR PHASE	COMPRESSOR MOTOR VOLT	CONDENSER FAN MOTORS # FANS	CONDENSER FAN MOTORS NOMINAL POWER HP	CONDENSER FAN MOTORS NOMINAL POWER [W]	CONDENSER FAN MOTORS PHASE	CONDENSER FAN MOTORS VOLT	REMARKS
(E) 702-ACCH1	BLDG 702 ROOF	SURGERY	RECIPROCATING	120	[420]	5	1.26	2.79		240	[52]	52	[11]	40	[4]		[ ]	0.0001	115	[46]	5	40	[30]	3	460	10	5	[3700]	3	460	30GTN150-621AJ
(E) 702-ACCH2	BLDG 702 ROOF	SURGERY	RECIPROCATING	120	[420]	5	1.26	2.79		240	[15]	52	[11]	40	[4]		[ ]	0.0001	115		5	40	[30]	3	460	10	5	[3700]	3	460	30GTN150-621AJ

NOTES

1. EXISTING EQUIPMENT PROVIDED FOR REFERENCE ONLY.
2. CONTROLS CONTRACTOR SHALL INTEGRATE AIR COOLED CHILLERS CONTROLS TO ECC.

WATER COOLED CHILLER SCHEDULE

MARK	LOCATION	AREA AND/OR BLDG SERVED	TYPE	CAPACITY TONS	CAPACITY [kW]	MAX kW/TON	MIN COP	MAX NPLV (kW/TON)	EVAPORATOR FLOW GPM	EVAPORATOR FLOW [L/s]	EVAPORATOR EWT °F	EVAPORATOR EWT [°C]	EVAPORATOR LWT °F	EVAPORATOR LWT [°C]	EVAPORATOR MAX WPD FT	EVAPORATOR MAX WPD [kPa]	FOULING FACTOR	CONDENSER FLOW GPM	CONDENSER FLOW [L/s]	CONDENSER EWT °F	CONDENSER EWT [°C]	CONDENSER LWT °F	CONDENSER LWT [°C]	CONDENSER MAX WPD FT	CONDENSER MAX WPD [kPa]	FOULING FACTOR	ELECTRICAL POWER MCA	PHASE	VOLT	SPEED CONTROL	REMARKS
(D) 702-CCU-1	BLDG 702	ALL	CENTRIFUGAL	430	[120]	0.55	5	0.51	860	[54]	54	[12]	42	[6]		[ ]	0.00010	1290	[81]	80	[27]	90	[32]		[ ]	0.00025	600	3	460	VFD	CARRIER 19XRV
(E) 702-CCU-2	BLDG 702	ALL	CENTRIFUGAL	430	[120]	0.55	6.4	0.45	860	[54]	54	[12]	42	[6]		[ ]	0.00010	1290	[81]	80	[27]	90	[32]		[ ]	0.00025	600	3	460	VFD	CARRIER 19XRV
(E) 703-CCU-3	BLDG 703	ALL	CENTRIFUGAL	430	[120]	.55			860	[54]	54	[12]	42	[6]		[ ]	0.00010	1290	[81]	80		90			[ ]	0.00025	423	3	460	VFD	YORK YK EQ ER Q6
(N) 702-WCCH1	BLDG 702	ALL	CENTRIFUGAL	700	[200]	.568	6.192	.336	1400	[88]	54	[12]	42	[6]	12	[36]	0.00010	2100	[130]	85		95		10	[30]	0.00025	651	3	460	VFD	DAIKIN WME0700
									1870	[120]	51	[11]	42	[6]	15	[45]															

NOTES

1. SEE SPECIFICATIONS FOR OTHER APPLICABLE ENGINEERING REQUIREMENTS.
2. "MAX kW/TON" AND "MIN COP" SPECIFIED ARE AT DESIGN CONDITION INDICATED.
3. BOTH THE EVAPORATOR AND CONDENSER SHALL BE DESIGNED FOR VARIABLE FLOW.

WATER FLOW CONTROL VALVE SCHEDULE

MARK	LOCATION	QTY	SYSTEM AND/OR SERVICE	MINIMUM FLOW COEFFICIENT [CV]	FLOW RANGE GPM	FLOW RANGE [L/s]	WATER TEMP °F	WATER TEMP [°C]	MAX INLET PRESS PSIG	MAX INLET PRESS [kPa]	MIN INLET PRESS PSIG	MIN INLET PRESS [kPa]	MAX LEAKAGE AT SHUTOFF	REMARKS
WFCV-CH1	WCCH-1	1	CHS	3500	2000	[130]	42		150	[1000]	60	[410]	BUBBLE TIGHT	BELIMO F6250-150SHP+SY4-120MFT
WFCV-CH2	WCCH-2	1	CHS	3500	2000	[130]	42		150	[1000]	60	[410]	BUBBLE TIGHT	BELIMO F6250-150SHP+SY4-120MFT
WFCV-CW1	WCCH-1	1	CWR	2-POS	2500	[160]	90		100	[690]	30	[210]	BUBBLE TIGHT	BELIMO F6250-150SHP+SY4-110
WFCV-CW2	WCCH-2	1	CWR	2-POS	2500	[160]	90		100	[690]	30	[210]	BUBBLE TIGHT	BELIMO F6250-150SHP+SY4-110
WFCV-CTBP	CT BYPASS	1	CWR	6500	4200	[260]	65		100	[690]	30	[210]	BUBBLE TIGHT	BELIMO F6350-150SHP+SY5-120MFT
						[ ]				[ ]		[ ]		

AIR SEPARATOR SCHEDULE

MARK	LOCATION	SYSTEM AND/OR SERVICE	TYPE	AIR SEPARATOR SIZE IN IN	AIR SEPARATOR SIZE IN [mm]	AIR SEPARATOR FLOW GPM	AIR SEPARATOR FLOW [L/s]	AIR SEPARATOR WPD FT	AIR SEPARATOR WPD [kPa]	BUILT-IN STRAINER REQ'D	REMARKS
AS-1	SCHP HEADER	CHS	INLINE PURGER	14	[350]	4600	[290]	5	[15]	NO	WESSELS APSS-114
					[ ]		[ ]		[ ]		

WATER FLOWMETER SCHEDULE

MARK	LOCATION	SYSTEM AND/OR SERVICE	FLUID TEMP °F	FLUID TEMP [°C]	LINE PRESSURE PSIG	LINE PRESSURE [kPa]	ACCURATE FLOW RANGE GPM	ACCURATE FLOW RANGE [L/s]	MIN ACCURACY [%]	MAX DIFF PRESS PSIG	MAX DIFF PRESS [kPa]	REMARKS
WFM-CH1	WCCH-1	CHR	54		60	[410]	2000	[130]	+/- 1%		[ ]	SPIRAX SARCO HYDRO-FLOW 3100-10-1-1-2-1
WFM-CH2	WCCH-2	CHR	54		60	[410]	2000	[130]	+/- 1%		[ ]	SPIRAX SARCO HYDRO-FLOW 3100-10-1-1-2-1
WFM-CW1	WCCH-1	CWS	85		30	[210]	2500	[160]	+/- 1%		[ ]	SPIRAX SARCO HYDRO-FLOW 3100-10-1-1-2-1
WFM-CW2	WCCH-2	CWS	85		30	[210]	2500	[160]	+/- 1%		[ ]	SPIRAX SARCO HYDRO-FLOW 3100-10-1-1-2-1
WFM-PCHEQ	CH BRIDGE	CHS/R	42/54		60	[410]	4600	[290]	+/- 1%			SPIRAX SARCO HYDRO-FLOW 3100-14-1-1-2-1
WFM-PCHEQ	CH BRIDGE	CHS/R	42/54		60	[410]	4600	[290]	+/- 1%			SPIRAX SARCO HYDRO-FLOW 3100-14-1-1-2-1

FAN SCHEDULE

MARK	LOCATION	AREA AND/OR BLDG SERVED	SYSTEM AND/OR SERVICE	AIR FLOW CFM	AIR FLOW [L/s]	TSP IN	TSP [Pa]	FAN TYPE	
(E) 702-EF1	ROOF	702	REF PURGE	4160	[2000]	0.25	[63]	UB-BLAST	---
					[ ]		[ ]		

NOTE

PURGE FAN IS EXISTING. TAB CONTRACTOR SHALL BALANCE TO 4160 CFM.

PUMP SCHEDULE

MARK	LOCATION	AREA AND/OR BLDG SERVED	SYSTEM AND/OR SERVICE	TYPE	CIRCULATING FLUID FLUID	FLOW GPM	FLOW [L/s]	HEAD FT	HEAD [kPa]	NPSH AVAILABLE FT	NPSH AVAILABLE [kPa]	TEMPERATURE °F	TEMPERATURE [°C]	SP GR	MIN % EFF	ELECTRICAL MOTOR NOMINAL POWER HP	NOMINAL POWER [kW]	PHASE	VOLT	MAX RPM	SPEED CONTROL	REMARKS
(D) 702-CHP1	BLDG 702	BLDG 702	PRIMARY CHILLED WATER	END SUCTION	CHILLED WATER	860	[54]	38	[610]	6.5	[100]	52	[11]	1	88	15	[11]	3	460	1160	CONSTANT	TACO FE-5010
(D) 702-CHP2	BLDG 702	BLDG 702	PRIMARY CHILLED WATER	END SUCTION	CHILLED WATER	860	[54]	38	[610]	6.5	[100]	52	[11]	1	88	15	[11]	3	460	1160	CONSTANT	TACO FE-5010
(D) 702-CHP3	BLDG 702	BLDG 702	PRIMARY CHILLED WATER	END SUCTION	CHILLED WATER	860	[54]	38	[610]	6.5	[100]	52	[11]	1	88	15	[11]	3	460	1160	CONSTANT	TACO FE-5010
(D) 702-CHP4	BLDG 702	ALL	SECONDARY CHILLED WATER	END SUCTION	CHILLED WATER	1200	[76]	90	[1400]	11	[180]	90	[32]	1	84.5	40	[30]	3	460	1760	VARIABLE FLOW	TACO FI-6013
(D) 702-CHP5	BLDG 702	ALL	SECONDARY CHILLED WATER	END SUCTION	CHILLED WATER	1200	[76]	90	[1400]	11	[180]	90	[32]	1	84.5	40	[30]	3	460	1760	VARIABLE FLOW	TACO FI-6013
(D) 702-CHP6	BLDG 702	ALL	SECONDARY CHILLED WATER	END SUCTION	CHILLED WATER	1200	[76]	90	[1400]	11	[180]	90	[32]	1	84.5	40	[30]	3	460	1760	VARIABLE FLOW	TACO FI-6013
(D) 702-CWP1	BLDG 702 ROOF	ALL	CONDENSER WATER	END SUCTION	CONDENSER WATER	1290	[81]	85	[1400]	13.7	[220]	85	[29]	1	87.7	40	[30]	3	460	1760	CONSTANT	TACO FE-5010
(D) 702-CWP2	BLDG 702 ROOF	ALL	CONDENSER WATER	END SUCTION	CONDENSER WATER	1290	[81]	85	[1400]	13.7	[220]	85	[29]	1	87.7	40	[30]	3	460	1760	CONSTANT	TACO FE-5010
(D) 702-CWP3	BLDG 702 ROOF	ALL	CONDENSER WATER	END SUCTION	CONDENSER WATER	1290	[81]	85	[1400]	13.7	[220]	85	[29]	1	87.7	40	[30]	3	460	1760	CONSTANT	TACO FE-5010
(E) 703-CHP1	BLDG 703	BLDG 703	PRIMARY CHILLED WATER	END SUCTION	CHILLED WATER	860	[54]	50	[800]	4.5	[72]	90	[32]	1	62	15	[11]	3	460	1750	CONSTANT	TACO FI-5009
(E) 703-CHP2	BLDG 703	BLDG 703	PRIMARY CHILLED WATER	END SUCTION	CHILLED WATER	860	[54]	50	[800]	4.5	[72]	90	[32]	1	62	15	[11]	3	460	1750	CONSTANT	TACO FI-5009
(E) 703-CWP1	BLDG 703	BLDG 703	CONDENSER WATER	END SUCTION	CONDENSER WATER	1290	[81]	90	[1400]	4.5	[72]	90	[32]	1	62	40	[30]	3	460	1750	CONSTANT	TACO FI-6013
(E) 703-CWP2	BLDG 703	BLDG 703	CONDENSER WATER	END SUCTION	CONDENSER WATER	1290	[81]	90	[1400]	4.5	[72]	90	[32]	1	62	40	[30]	3	460	1750	CONSTANT	TACO FI-6013
(D) 702-CHP1	BLDG 702	SURGERY	SURGERY CHILLED WATER	END SUCTION	CHILLED WATER	240	[15]	100	[1600]	6.5	[100]	52	[11]	1	88	15	[11]	3	460	1160	CONSTANT	TACO FE-2510
(D) 702-CHP2	BLDG 702	SURGERY	SURGERY CHILLED WATER	END SUCTION	CHILLED WATER	240	[15]	100	[1600]	6.5	[100]	52	[11]	1	88	15	[11]	3	460	1160	CONSTANT	TACO FE-2510
(D) 702-CHP3	BLDG 702	SURGERY	SURGERY CHILLED WATER	END SUCTION	CHILLED WATER	240	[15]	100	[1600]	6.5	[100]	52	[11]	1	88	15	[11]	3	460	1160	CONSTANT	TACO FE-2510
(N) 702 PCHP1	BLDG 702	BLDG 702	PRIMARY CHILLED WATER	END SUCTION	CHILLED WATER	1870	[120]	52.7	[840]	N/A	N/A	51	[11]	1	82.1	40	[30]	3	460	1770	VFD	B&G E-1510 6BD 1770
(N) 702 PCHP2 (DEDUCTIVE ALTERNATE NO. 3)	BLDG 702	BLDG 702	PRIMARY CHILLED WATER	END SUCTION	CHILLED WATER	1870	[120]	52.7	[840]	N/A	N/A	51	[11]	1	82.1	40	[30]	3	460	1770	VFD	B&G E-1510 6BD 1770
(N) 702 PCHP3	BLDG 702	BLDG 702	PRIMARY CHILLED WATER	END SUCTION	CHILLED WATER	1870	[120]	52.7	[840]	N/A	N/A	51	[11]	1	82.1	40	[30]	3	460	1770	VFD	B&G E-1510 6BD 1770
(N) 702 SCHP1	BLDG 702	ALL	SECONDARY CHILLED WATER	END SUCTION	CHILLED WATER	1830	[120]	100	[1600]	N/A	N/A	42	[6]	1	87.7	60	[45]	3	460	1750	VFD	B&G 1510 6E 1770
(N) 702 SCHP2 (DEDUCTIVE ALTERNATE NO. 2)	BLDG 702	ALL	SECONDARY CHILLED WATER	END SUCTION	CHILLED WATER	1830	[120]	100	[1600]	N/A	N/A	42	[6]	1	87.7	60	[45]	3	460	1750	VFD	B&G 1510 6E 1770
(N) 702 SCHP3	BLDG 702	ALL	SECONDARY CHILLED WATER	END SUCTION	CHILLED WATER	1830	[120]	100	[1600]	N/A	N/A	42	[6]	1	87.7	60	[45]	3	460	1750	VFD	B&G 1510 6E 1770
(N) 702-CWP1	BLDG 702 ROOF	ALL	CONDENSER WATER	CLOSE COUPLED END SUCTION	CONDENSER WATER	2100	[130]	62.5	[1000]	16	[260]	85	[29]	1	84.6	50	[37]	3	460	1150	CONSTANT	B&G 1531 8G 1150
(N) 702-CWP2 (DEDUCTIVE ALTERNATE NO. 3)	BLDG 702 ROOF	ALL	CONDENSER WATER	CLOSE COUPLED END SUCTION	CONDENSER WATER	2100	[130]	62.5	[1000]	16	[260]	85	[29]	1	84.6	50	[37]	3	460	1150	CONSTANT	B&G 1531 8G 1150
(N) 702-CWP3	BLDG 702 ROOF	ALL	CONDENSER WATER	CLOSE COUPLED END SUCTION	CONDENSER WATER	2100	[130]	62.5	[1000]	16	[260]	85	[29]	1	84.6	50	[37]	3	460	1150	CONSTANT	B&G 1531 8G 1150

EXPANSION TANK SCHEDULE

MARK	LOCATION	SYSTEM AND/OR SERVICE	TYPE	APPROX SYSTEM VOLUME GAL	APPROX SYSTEM VOLUME [L]	SYSTEM TEMPERATURE RANGE MIN °F	MIN [°C]	MAX °F	MAX [°C]	INITIAL PRESSURE IN TANK PSIG	INITIAL PRESSURE IN TANK [kPa]	MAX OPERATING PRESSURE PSIG	MAX OPERATING PRESSURE [kPa]	FILL PRESSURE AT TANK RELIEF VALVE PSIG	RELIEF VALVE [kPa]	AT TANK PSIG	AT TANK [kPa]	MIN VOLUME TANK GAL	MIN VOLUME TANK [L]	MIN BLADDER VOLUME GAL	MIN BLADDER VOLUME [L]	PIPE SIZE TO TANK IN	PIPE SIZE TO TANK [mm]	COLD WATER FILL SIZE IN	COLD WATER FILL SIZE [mm]	REMARKS
ET-1	SCHP HEADER	CHILLED WATER	BLADDER	14000	[53000]	40	[4]	95	[35]	48.3	[330]	100	[690]	100	[690]	74	[510]	70	[260]	250	[950]	1-1/2	[38]	1-1/2	[38]	WESSELS NLAP-950

HILLIARD ARCHITECTS INC. COPYRIGHT

7/10/2014 9:24:39 AM

Revisions:	Date
CONFORMED CONST. DOCUMENTS	07.11.14
CONSTRUCTION DOCUMENTS	06.30.14
DESIGN DEVELOPMENT 2	06.13.14

CONSULTANTS:

Affiliated Engineers W, Inc.
123 Mission Street, 7th Floor
San Francisco, California 94105
415.764.3700

ARCHITECT/ENGINEERS:

Hilliard ARCHITECTS
251 Post Street, Suite 620
San Francisco, CA 94108
Tel 415 989 6400
www.HilliardArchitects.com

Drawing Title: MECHANICAL SCHEDULES

Approved: Project Director

Project Title: Install New High Efficiency Water Cooled Chiller No. 1

Location: VANCHCS; MATHER, CA

Date: 7.11.2014 | Checked: AEI | Drawn: AEI

Project Number: 612A4-14-006

Building Number: 702

Drawing Number: MH-602

Dwg. of

Office of Construction and Facilities Management

Department of Veterans Affairs

VA FORM 08-6231

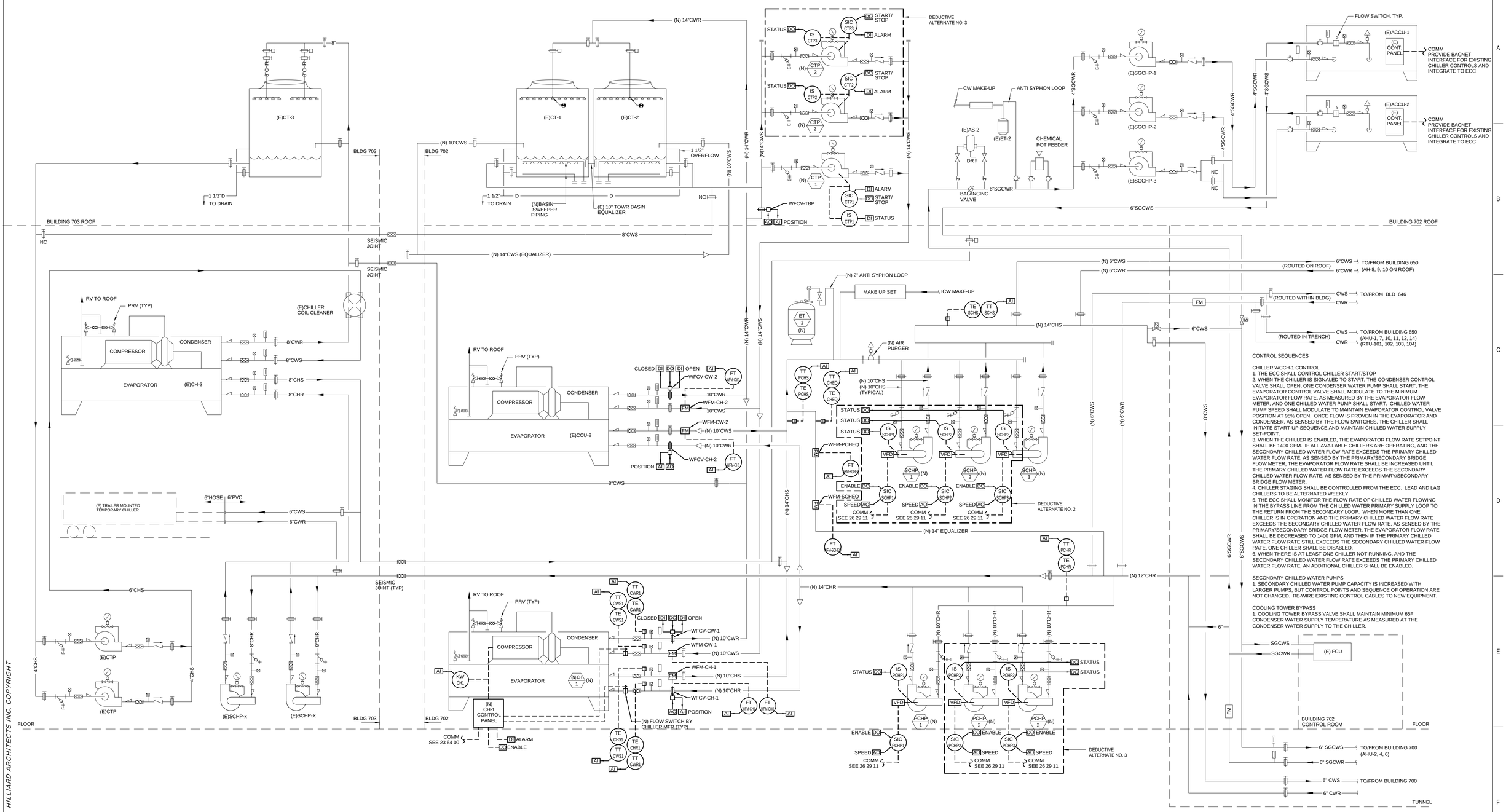

GENERAL NOTES

1. PHASING OF NEW WORK IS NOT INDICATED ON THIS DIAGRAM. REFER TO INDIVIDUAL HVAC NEW WORK SHEETS FOR ACTUAL PHASING SEQUENCE.

CONTROL SEQUENCES

CHILLER WCCH-1 CONTROL
1. THE ECC SHALL CONTROL CHILLER START/STOP
2. WHEN THE CHILLER IS SIGNALED TO START, THE CONDENSER CONTROL VALVE SHALL OPEN, ONE CONDENSER WATER PUMP SHALL START, THE EVAPORATOR CONTROL VALVE SHALL MODULATE TO THE MINIMUM EVAPORATOR FLOW RATE, AS MEASURED BY THE EVAPORATOR FLOW METER, AND ONE CHILLED WATER PUMP SHALL START. CHILLED WATER PUMP SPEED SHALL MODULATE TO MAINTAIN EVAPORATOR CONTROL VALVE POSITION AT 95% OPEN. ONCE FLOW IS PROVEN IN THE EVAPORATOR AND CONDENSER, AS SENSED BY THE FLOW SWITCHES, THE CHILLER SHALL INITIATE START-UP SEQUENCE AND MAINTAIN CHILLED WATER SUPPLY SET-POINT.
3. WHEN THE CHILLER IS ENABLED, THE EVAPORATOR FLOW RATE SETPOINT SHALL BE 1400 GPM. IF ALL AVAILABLE CHILLERS ARE OPERATING, AND THE SECONDARY CHILLED WATER FLOW RATE EXCEEDS THE PRIMARY CHILLED WATER FLOW RATE, AS SENSED BY THE PRIMARY/SECONDARY BRIDGE FLOW METER, THE EVAPORATOR FLOW RATE SHALL BE INCREASED UNTIL THE PRIMARY CHILLED WATER FLOW RATE EXCEEDS THE SECONDARY CHILLED WATER FLOW RATE, AS SENSED BY THE PRIMARY/SECONDARY BRIDGE FLOW METER.
4. CHILLER STAGING SHALL BE CONTROLLED FROM THE ECC. LEAD AND LAG CHILLERS TO BE ALTERNATED WEEKLY.
5. THE ECC SHALL MONITOR THE FLOW RATE OF CHILLED WATER FLOWING IN THE BYPASS LINE FROM THE CHILLED WATER PRIMARY SUPPLY LOOP TO THE RETURN FROM THE SECONDARY LOOP. WHEN MORE THAN ONE CHILLER IS IN OPERATION AND THE PRIMARY CHILLED WATER FLOW RATE EXCEEDS THE SECONDARY CHILLED WATER FLOW RATE, AS SENSED BY THE PRIMARY/SECONDARY BRIDGE FLOW METER, THE EVAPORATOR FLOW RATE SHALL BE DECREASED TO 1400 GPM, AND THEN IF THE PRIMARY CHILLED WATER FLOW RATE STILL EXCEEDS THE SECONDARY CHILLED WATER FLOW RATE, ONE CHILLER SHALL BE DISABLED.
6. WHEN THERE IS AT LEAST ONE CHILLER NOT RUNNING, AND THE SECONDARY CHILLED WATER FLOW RATE EXCEEDS THE PRIMARY CHILLED WATER FLOW RATE, AN ADDITIONAL CHILLER SHALL BE ENABLED.

SECONDARY CHILLED WATER PUMPS
1. SECONDARY CHILLED WATER PUMP CAPACITY IS INCREASED WITH LARGER PUMPS, BUT CONTROL POINTS AND SEQUENCE OF OPERATION ARE NOT CHANGED. RE-WIRE EXISTING CONTROL CABLES TO NEW EQUIPMENT.

COOLING TOWER BYPASS
1. COOLING TOWER BYPASS VALVE SHALL MAINTAIN MINIMUM 65F CONDENSER WATER SUPPLY TEMPERATURE AS MEASURED AT THE CONDENSER WATER SUPPLY TO THE CHILLER.

1 MECHANICAL HVAC CONTROLS DIAGRAM - BLDG 702, 703

12" = 1'-0"

HILLIARD ARCHITECTS INC. COPYRIGHT

7/10/2014 9:32:10 AM

Revisions:	Date
CONFORMED CONST. DOCUMENTS	07.11.14
CONSTRUCTION DOCUMENTS	06.30.14

CONSULTANTS:

Affiliated Engineers®
Affiliated Engineers W, Inc.
123 Mission Street, 7th Floor
San Francisco, California 94105
415.764.3700

ARCHITECT/ENGINEERS:

Hilliard ARCHITECTS
251 Post Street, Suite 620
San Francisco, CA 94108
Tel 415 989 6400
www.HilliardArchitects.com

Drawing Title	MECHANICAL HVAC CONTROLS DIAGRAM - BLDG 702, 703
Approved: Project Director	
Project Title	Install New High Efficiency Water Cooled Chiller No. 1
Project Number	612A4-14-006
Building Number	702, 703
Location	VANCHCS; MATHER, CA
Date	7.11.2014
Checked	AEI
Drawn	AEI
Drawing Number	MI-601
Dwg. of	

Office of Construction and Facilities Management

Department of Veterans Affairs

VA FORM 08-6231

ELECTRICAL SYMBOLS AND ABBREVIATIONS

LIGHTING

TYPE — CIRCUIT/SWITCH

TYPE	DESCRIPTION	TYPE	DESCRIPTION
A	LINE VOLTAGE INCANDESCCENT/HALOGEN	G	ELECTRODELESS INDUCTION FLUORESCENT
B	LOW VOLTAGE INCANDESCENT/HALOGEN	H	STANDARD HID
C	COMPACT FLUORESCENT	L	LIGHT PIPE/GUIDE/TUBE, FIBER OPTICS
D	DOUBLE ENDED/PIN, SINGLE ENDED	N	NEON/COLD CATHODE
	COMPACT HID	S	SPECIAL PURPOSE
F	STANDARD LINEAR FLUORESCENT	T	TRACK
		X	EXIT LIGHT

SUFFIX	DESCRIPTION
E	BATTERY PACK/INVERTER

- SURFACE MOUNTED LINEAR FLUORESCENT MOUNTING LOCATION: CEILING
- SURFACE MOUNTED LINEAR FLUORESCENT MOUNTING LOCATION: WALL
- PENDANT/SUSPENDED LINEAR FLUORESCENT
- PENDANT/SUSPENDED FLUORESCENT
- RECESSED GRID MOUNTED FLUORESCENT MOUNTING LOCATION: CEILING
- RECESSED FLANGE MOUNTED FLUORESCENT MOUNTING LOCATION: CEILING
- SURFACE MOUNTED FLUORESCENT MOUNTING LOCATION: CEILING
- SURFACE MOUNTED EMERGENCY LINEAR FLUORESCENT MOUNTING LOCATION: CEILING
- SURFACE MOUNTED EMERGENCY LINEAR FLUORESCENT MOUNTING LOCATION: WALL
- PENDANT/SUSPENDED EMERGENCY LINEAR FLUORESCENT
- PENDANT/SUSPENDED EMERGENCY FLUORESCENT
- RECESSED GRID MOUNTED EMERGENCY FLUORESCENT. MOUNTING LOCATION: CEILING
- RECESSED FLANGE MOUNTED EMERGENCY FLUORESCENT. MOUNTING LOCATION: CEILING
- SURFACE MOUNTED EMERGENCY FLUORESCENT. MOUNTING LOCATION: CEILING
- SURFACE MOUNTED CRITICAL LINEAR FLUORESCENT MOUNTING LOCATION: CEILING
- SURFACE MOUNTED CRITICAL LINEAR FLUORESCENT MOUNTING LOCATION: WALL
- PENDANT/SUSPENDED CRITICAL LINEAR FLUORESCENT
- PENDANT/SUSPENDED CRITICAL FLUORESCENT
- RECESSED GRID MOUNTED CRITICAL FLUORESCENT. MOUNTING LOCATION: CEILING
- RECESSED FLANGE MOUNTED CRITICAL FLUORESCENT. MOUNTING LOCATION: CEILING
- SURFACE MOUNTED CRITICAL FLUORESCENT. MOUNTING LOCATION: CEILING
- SINGLE HEAD EMERGENCY FIXTURE WITH BATTERY PACK
- DOUBLE HEAD EMERGENCY FIXTURE WITH BATTERY PACK
- RECESSED MOUNTED INCANDESCENT/COMPACT FLUORESCENT/HID MOUNTING LOCATION: CEILING
- SURFACE MOUNTED INCANDESCENT/COMPACT FLUORESCENT/HID MOUNTING LOCATION: CEILING
- RECESSED MOUNTED INCANDESCENT/COMPACT FLUORESCENT/HID MOUNTING LOCATION: WALL
- SURFACE MOUNTED INCANDESCENT/COMPACT FLUORESCENT/HID MOUNTING LOCATION: WALL
- PENDANT/SUSPENDED INCANDESCENT/COMPACT FLUORESCENT/HID
- RECESSED MOUNTED EMERGENCY INCADESCENT/COMPACT FLUORESCENT/HID MOUNTING LOCATION: CEILING
- SURFACE MOUNTED EMERGENCY INCANDESCENT/COMPACT FLUORESCENT/HID MOUNTING LOCATION: CEILING
- RECESSED MOUNTED EMERGENCY INCANDESCENT/COMPACT FLUORESCENT/HID MOUNTING LOCATION: WALL
- SURFACE MOUNTED EMERGENCY INCANDESCENT/COMPACT FLUORESCENT/HID MOUNTING LOCATION: WALL
- PENDANT/SUSPENDED EMERGENCY INCANDESCENT/COMPACT FLUORESCENT/HID
- RECESSED MOUNTED CRITICAL INCADESCENT/COMPACT FLUORESCENT/HID MOUNTING LOCATION: CEILING
- SURFACE MOUNTED CRITICAL INCANDESCENT/COMPACT FLUORESCENT/HID MOUNTING LOCATION: CEILING
- RECESSED MOUNTED CRITICAL INCANDESCENT/COMPACT FLUORESCENT/HID MOUNTING LOCATION: WALL
- SURFACE MOUNTED CRITICAL INCANDESCENT/COMPACT FLUORESCENT/HID MOUNTING LOCATION: WALL
- PENDANT/SUSPENDED CRITICAL INCANDESCENT/COMPACT FLUORESCENT/HID
- DIRECTIONAL INDICATOR ADDED TO FIXTURE SYMBOL TO DESIGNATE AIMING DIRECTION
- EXIT DIRECTIONAL ARROW
- SINGLE FACE EXIT FIXTURE MOUNTING LOCATION: CEILING
- DOUBLE FACE EXIT FIXTURE MOUNTING LOCATION: CEILING
- SINGLE FACE EXIT FIXTURE MOUNTING LOCATION: WALL
- DOUBLE FACE EXIT FIXTURE MOUNTING LOCATION: WALL
- PILOT LIGHT MOUNTING LOCATION: AS NOTED
- TRACK MOUNTING LOCATION: AS NOTED

SITE SYMBOLS

TYPE — CIRCUIT/SWITCH

- POLE FIXTURE, ONE HEAD
- POLE FIXTURE, TWO HEAD
- POLE FIXTURE, FOUR HEAD
- BOLLARD OR GROUND MOUNTED FIXTURE
- EXTERIOR WALL MOUNTED FIXTURE
- F — E = ELECTRIC POWER; T = TELEPHONE
- UG — UG = UNDERGROUND; OH = OVERHEAD; D = DATA

EQUIPMENT AND WIRING

- MOTOR
- TRANSFORMER - ONE LINE DIAGRAM
- ISOLATION TRANSFORMER - ONE LINE DIAGRAM
- GROUND CONNECTION
- TRANSFORMER
- PANELBOARD - NORMAL SURFACE MOUNTED
- PANELBOARD - NORMAL FLUSH MOUNTED
- PANELBOARD - EMERGENCY/LIFE SAFETY SURFACE MOUNTED
- PANELBOARD - EMERGENCY/LIFE SAFETY FLUSH MOUNTED
- PANELBOARD - CRITICAL SURFACE MOUNTED
- PANELBOARD - CRITICAL FLUSH MOUNTED
- LOW VOLTAGE LIGHTING CONTROL PANEL - SURFACE MOUNTED
- LOW VOLTAGE LIGHTING CONTROL PANEL - FLUSH MOUNTED
- DISTRIBUTION PANELBOARD
- MCC — MOTOR CONTROL CENTER
- CABLE TAP BOX
- BUSWAY PLUG-IN UNIT
- CURRENT TRANSFORMER
- POTENTIAL TRANSFORMER
- REVERSE POWER RELAY
- NON FUSED DISCONNECT SWITCH
- FUSED DISCONNECT SWITCH
- BREAKER DISCONNECT SWITCH
- MAGNETIC MOTOR STARTER
- COMBINATION MOTOR STARTER
- MANUAL STARTER W/OVERLOAD PROTECTION
- MOTOR RATED SWITCH W/ THERMAL OVERLOAD PROTECTION
- SURFACE JUNCTION BOX
- SURFACE JUNCTION BOX - WALL
- FLUSH JUNCTION BOX - CEILING
- FLUSH JUNCTION BOX - WALL
- FLUSH JUNCTION BOX - FLOOR
- AUTOMATIC TRANSFER SWITCH
- VS — VOLTMETER & SELECTOR SWITCH
- AS — AMMETER, SELECTOR SWITCH, & CT'S
- EGS — ENGINE GENERATOR SET
- GEN — REMOTE GENERATOR ANNUNCIATOR
- REMOTE GROUND INDICATOR
- ROOM REFERENCE GROUND POINT
- GROUND CONNECTION - PLUG-IN
- LINE VOLTAGE THERMOSTAT
- REVENUE METER, kWh/D
- METER WITH CURRENT TRANSFORMER
- MOLDED CASE CIRCUIT BREAKER
- LOW VOLTAGE DRAW-OUT AIR CIRCUIT BREAKER
- SWITCH - ONE LINE DIAGRAM
- GROUNDED "Y" SYSTEM
- H — ELECTRIC HEATER
- R — RELAY - TYPE AS NOTED
- TR — TIMING RELAY
- AIR TERMINAL
- PUSH BUTTON
- K — KIRK KEY INTERLOCK
- PM — PHYSIOLOGICAL MONITOR OUTLET
- PANEL DIVISION ARROW
- PANEL DIVISION LINE
- WIRING CONCEALED IN FLOOR
- WIRING IN CEILING/WALLS
- HOMERUN
  - INDICATES NUMBER OF CONDUCTORS
  - INDICATES NEUTRAL CONDUCTOR PROVIDE GROUND IN EVERY CONDUIT WHERE NOT INDICATED, PROVIDE, HOT, NEUTRAL, AND GROUND

LP-A/1,3,5 - PANEL/CIRCUITS

SWITCHES

- $a — SINGLE POLE SWITCH; MOUNTING LOCATION: WALL; MOUNTING HEIGHT: 3'-6"; a = SWITCH DESIGNATION
- $3 — THREE WAY SWITCH; MOUNTING LOCATION: WALL; MOUNTING HEIGHT: 3'-6"
- $4 — FOUR WAY SWITCH; MOUNTING LOCATION: WALL; MOUNTING HEIGHT: 3'-6"
- $2 — TWO POLE SWITCH; MOUNTING LOCATION: WALL; MOUNTING HEIGHT: 3'-6"
- $K — KEY SWITCH; MOUNTING LOCATION: WALL; MOUNTING HEIGHT: 3'-6"
- $MC — MOMENTARY CONTACT SWITCH; MOUNTING LOCATION: WALL; MOUNTING HEIGHT: 3'-6"
- $D — DOOR SWITCH; MOUNTING LOCATION: WALL; MOUNTING HEIGHT: 3'-6"
- $P — SWITCH WITH PILOT LIGHT; MOUNTING LOCATION: WALL; MOUNTING HEIGHT: 3'-6"
- $ LV-M — LOW VOLTAGE "M"-MASTER SWITCH; MOUNTING LOCATION: WALL; MOUNTING HEIGHT: 3'-6"
- $DM — REMOTE CONTROL FOR MOTORIZED DAMPER; MOUNTING LOCATION: WALL; MOUNTING HEIGHT: 3'-6"
- LC — LIGHTING CONTACTOR; MOUNTING LOCATION: WALL; MOUNTING HEIGHT: AS NOTED
- D — DIMMER MOUNTING; LOCATION: WALL; MOUNTING HEIGHT: 3'-6"
- TS — TIME SWITCH MOUNTING; LOCATION: WALL; MOUNTING HEIGHT: 3'-6"
- PCS — PHOTO CELL MOUNTING; LOCATION: WALL; MOUNTING HEIGHT: AS NOTED
- S AL — AMBIENT LIGHT SENSOR; MOUNTING LOCATION: WALL; MOUNTING HEIGHT: AS NOTED
- S AL — AMBIENT LIGHT SENSOR; MOUNTING LOCATION: CEILING
- S ??? — OCCUPANCY SENSOR FOR LIGHTING CONTROL
  - PIR = PASSIVE INFRARED
  - 2P = 2 POLE, DUAL RELAY
  - U = ULTRASONIC
  - DT = DUAL TECHNOLOGY
  - PIRA = PIR WITH AMBIENT LIGHT SENSOR
  - MOUNTING LOCATION: WALL; MOUNTING HEIGHT: 3'-6"
- S ??? — OCCUPANCY SENSOR FOR LIGHTING CONTROL; MOUNTING LOCATION: CEILING
- FLOOR SWITCH; MOUNTING LOCATION: FLOOR

RECEPTACLES

- DUPLEX RECEPTACLE; MOUNTING LOCATION: WALL; MOUNTING HEIGHT: 1'-6"
- EMERGENCY DUPLEX RECEPTACLE; MOUNTING LOCATION: WALL; MOUNTING HEIGHT: 1'-6"
- SINGLE RECEPTACLE; MOUNTING LOCATION: WALL; MOUNTING HEIGHT: 1'-6"
- DOUBLE DUPLEX RECEPTACLE; MOUNTING LOCATION: WALL; MOUNTING HEIGHT: 1'-6"
- EMERGENCY DOUBLE DUPLEX RECEPTACLE; MOUNTING LOCATION: WALL; MOUNTING HEIGHT: 1'-6"
- DUPLEX RECEPTACLE - ABOVE CASEWORK OR 2" ABOVE COUNTERTOP BACKSPLASH; MOUNTING LOCATION: WALL; MOUNTING HEIGHT: FIELD VERIFY
- EMERGENCY DUPLEX RECEPTACLE - ABOVE CASEWORK OR 2" ABOVE COUNTERTOP BACKSPLASH; MOUNTING LOCATION: WALL; MOUNTING HEIGHT: FIELD VERIFY
- POWER OUTLET; MOUNTING LOCATION: WALL; MOUNTING HEIGHT: 1'-6"
- POWER OUTLET, EMERGENCY CIRCUIT; MOUNTING LOCATION: WALL; MOUNTING HEIGHT: 1'-6"
- FIXED EQUIPMENT CONNECTION - WALL; MOUNTING LOCATION: WALL; MOUNTING HEIGHT: 1'-6"
- FIXED EQUIPMENT CONNECTION - WALL; EMERGENCY CIRCUIT; MOUNTING LOCATION: WALL; MOUNTING HEIGHT: 1'-6"
- X — X = OUTLET TYPE
  - D = DEDICATED OUTLET
  - G = GFCI OUTLET
  - L = TWISTLOCK OUTLET
  - T = TV OUTLET
  - W = WEATHERPROOF, GFCI OUTLET
  - #A = AMP RATING (OTHER THAN 20A)
- DUPLEX RECEPTACLE LOCATED IN SURFACE MOUNTED RACEWAY
- EMERGENCY DUPLEX RECEPTACLE LOCATED IN SURFACE MOUNTED RACEWAY
- POWER OUTLET IN SURFACE MOUNTED RACEWAY VOLTAGE AND AMPERAGE AS INDICATED
- EMERGENCY POWER OUTLET IN SURFACE MOUNTED RACEWAY VOLTAGE AND AMPERAGE AS INDICATED
- a — DUPLEX RECEPTACLE, UPPER HALF SWITCHED, LOWER HALF HOT MOUNTING LOCATION: WALL; MOUNTING HEIGHT: 1'-6"
- DOUBLE DUPLEX RECEPTACLE - ABOVE CASEWORK OR 2" ABOVE COUNTERTOP BACKSPLASH; MOUNTING LOCATION: WALL; MOUNTING HEIGHT: FIELD VERIFY
- EMERGENCY DOUBLE DUPLEX RECEPTACLE - ABOVE CASEWORK OR 2" ABOVE COUNTERTOP BACKSPLASH; MOUNTING LOCATION: WALL; MOUNTING HEIGHT: FIELD VERIFY
- DUPLEX RECEPTACLE - CEILING MOUNTED; MOUNTING LOCATION: CEILING
- DUPLEX RECEPTACLE - FLOOR MOUNTED; MOUNTING LOCATION: FLOOR
- FIXED EQUIPMENT CONNECTION MOUNTING LOCATION: COORDINATE W/ EQUIPMENT
- CLOCK RECEPTACLE; MOUNTING LOCATION: WALL; MOUNTING HEIGHT: 8'-0"
- OUTLETS INSTALLED IN SURFACE MOUNTED RACEWAY

RECEPTACLE MOUNTING HEIGHTS:

1. ALL RECEPTACLE MOUNTING HEIGHTS TO BE COORDINATED WITH ARCHITECT AND CASEWORK/ FURNITURE APPROVED SHOP DRAWINGS PRIOR TO ROUGH-IN. SOME RECEPTACLES TO BE MOUNTED INSIDE CASEWORK.

SHEET SYMBOLS

- NOTE DESIGNATION
- 1 / X0.0 — DETAIL REFERENCE TOP DESIGNATES DETAIL NUMBER BOTTOM DESIGNATES ON WHICH SHEET DETAIL APPEARS
- REFER / X0.0 — PLAN CONTINUATION DESIGNATION
- 1 / X0.0 — SECTION REFERENCE TOP DESIGNATES SECTION NUMBER BOTTOM DESIGNATES ON WHICH SHEET SECTION APPEARS
- LINE CONTINUE BREAK
- ELEVATION DESIGNATION
- REVISION NUMBER DESIGNATION
- NEW WORK CONNECTION TO EXISTING WORK DESIGNATION
- EQ / # — EQUIPMENT DESIGNATION; TOP DESIGNATES EQUIPMENT ABBREVIATION; BOTTOM DESIGNATES EQUIPMENT NUMBER

ELECTRICAL ABBREVIATIONS

A	-	AMPERES
AC	-	ABOVE CEILING/ALTERNATING CURRENT
ADO	-	AUTOMATIC DOOR OPENER
AF	-	AMPERE FRAME
AFF	-	ABOVE FINISHED FLOOR
AIC	-	AMP INTERRUPTING CAPACITY
ALT	-	ALTERNATE
ARCH	-	ARCHITECTURAL
ASC	-	ABOVE SUSPENDED CEILING
AT	-	AMPERE TRIP
ATS	-	AUTOMATIC TRANSFER SWITCH
AUTO	-	AUTOMATIC
BATS	-	BYPASS AUTOMATIC TRANSFER SWITCH
BC	-	BARE COPPER
BFC	-	BELOW FINISH CEILING
BFL	-	BELOW FLOOR LEVEL
BLDG	-	BUILDING
BPIP	-	BOILER PLANT INSTRUMENTATION PANEL
BPS	-	BYPASS SWITCH
BRKR	-	BREAKER
C	-	CONDUIT
CB	-	CIRCUIT BREAKER
CCTV	-	CLOSED CIRCUIT TELEVISION
CCT	-	CIRCUIT
CCT BKR	-	CIRCUIT BREAKER
CFCI	-	CONTRACTOR FURNISHED, CONTRACTOR INSTALLED
CLG	-	CEILING
CO	-	CONDUIT ONLY
CONTR	-	CONTRACTOR
CORR	-	CORRIDOR
CR	-	CONTROL RELAY
CT	-	CURRENT TRANSFORMER
DB	-	DIRECT BURIAL
DC	-	DIRECT CURRENT
DED	-	DEDICATED
DET	-	DETAIL
DIA	-	DIAMETER
DISC	-	DISCONNECT
DN	-	DOWN
DP	-	DISTRIBUTION PANEL
DS	-	DISCONNECT SWITCH
EC	-	EMPTY CONDUIT/ELECTRICAL CONTRACTOR
ECL	-	EMERGENCY CRITICAL LIGHTING
ECP	-	EMERGENCY CRITICAL POWER
EDB	-	ELECTRIC DUCT BANK
EG	-	EQUIPMENT GROUND
EGS	-	ENGINE GENERATOR SET
EJ	-	EXPANSION JOINT
ELEC	-	ELECTRIC/ELECTRICAL
ELL	-	EMERGENCY LIFE SAFETY LIGHTING
ELP	-	EMERGENCY LIFE SAFETY POWER
EMER	-	EMERGENCY
EMI	-	ELECTROMAGNETIC INTERFERENCE
EMT	-	ELECTRICAL METALLIC TUBING
EQ	-	ELECTRICALLY OPERATED
EPO	-	EMERGENCY POWER OFF
EQUIP	-	EQUIPMENT
ESM	-	ELECTRIC STRIP MOLD
ETR	-	EXISTING TO REMAIN
EWC	-	ELECTRIC WATER COOLER
F/FC	-	FLUSH WITH FINISHED CEILING
F/FF	-	FLUSH WITH FINISHED FLOOR
F/FW	-	FLUSH WITH FINISHED WALL
FA	-	FIRE ALARM
FACP	-	FIRE ALARM CONTROL PANEL
FCU	-	FAN COIL UNIT
FDR	-	FEEDER
FDS	-	FUSED DISCONNECT SWITCH
FI	-	FILM ILLUMINATOR
FIXT	-	FIXTURE
FL	-	AT FLOOR LINE
FLA	-	FULL LOAD AMPERES
FLEX	-	FLEXIBLE
FLR	-	FLOOR
FLUOR	-	FLUORESCENT
FS	-	FLOW SWITCH
FSS	-	FUSED SAFETY SWITCH
FSCP	-	FLAME SAFEGUARD CONTROL PANEL
FVNR	-	FULL VOLTAGE NON-REVERSING
GC	-	GENERAL CONTRACTOR
GFCI	-	GROUND FAULT CIRCUIT INTERRUPTER
GFP	-	GROUND FAULT PROTECTION
GND	-	GROUND
GEN	-	GENERATOR
GFI	-	GROUND FAULT INTERRUPTER
GTB	-	GROUND TERMINAL BOX
HH	-	HANDHOLE
HOA	-	HAND OFF AUTOMATIC
HP	-	HORSE POWER
HT	-	HEIGHT/HEAT TRACE
HV	-	HIGH VOLTAGE
IMC	-	INTERMEDIATE METAL CONDUIT
INCAND	-	INCANDESCENT
JB	-	JUNCTION BOX
KO	-	KNOCK-OUT
KV	-	KILOVOLT
KVA	-	KILOVOLT-AMPERES
KW	-	KILOWATTS
KWH	-	KILOWATT HOURS
LSIG/LSIA:		
L	-	LONG DELAY PROTECTION
S	-	SHORT DELAY PROTECTION
I	-	INSTANTANEOUS PROTECTION
A	-	GROUND FAULT ALARM
G	-	GROUND FAULT PROTECTION
LAN	-	LOCAL AREA NETWORK
LGT	-	LIGHT
LTCP	-	LOCAL TEMPERATURE CONTROL PANEL
LTG	-	LIGHTING
LTS	-	LIGHTS
LV	-	LOW VOLTAGE
MATV	-	MASTER ANTENNA TELEVISION
MC	-	MECHANICAL CONTRACTOR
MCB	-	MAIN CIRCUIT BREAKER
MCC	-	MOTOR CONTROL CENTER
MCP	-	MOTOR CIRCUIT PROTECTOR
MDP	-	MAIN DISTRIBUTION PANEL
MER	-	MECHANICAL EQUIPMENT ROOM
MLO	-	MAIN LUGS ONLY
MH	-	MANHOLE
MPTB	-	MUSIC & PAGE TERMINAL BOX
MTD	-	MOUNTED
MTG	-	MOUNTING
MTG HGT	-	MOUNTING HEIGHT
MTR	-	MOTOR/METER
NA	-	NOT APPLICABLE
NC	-	NEW CONNECTION/NORMALLY CLOSED
NEC	-	NATIONAL ELECTRICAL CODE
NFD	-	NON-FUSED DISCONNECT
NFSS	-	NON-FUSED SAFETY SWITCH
NIC	-	NOT IN CONTRACT
NO	-	NORMALLY OPEN
NTS	-	NOT TO SCALE
OC	-	ON CENTER
OFCI	-	OWNER FURNISHED CONTRACTOR INSTALLED
OFOI	-	OWNER FURNISHED OWNER INSTALLED
P	-	POLE
PA	-	PUBLIC ADDRESS
PB	-	PULL BOX/PUSHBUTTON
PBPU	-	PREFABRICATED BEDSIDE PATIENT POWER UNIT
PC	-	PLUMBING CONTRACTOR/PHOTOCELL
PDU	-	POWER DISTRIBUTION UNIT
PF	-	POWER FACTOR
PH	-	PHASE
PLBG	-	PLUMBING
PNL	-	PANEL
POD	-	POWER OPERATED DAMPER
PT	-	POTENTIAL TRANSFORMER
PTRV	-	POWER TYPE ROOF VENTILATOR
PWR	-	POWER
REC	-	RECESSED
RECEP	-	RECEPTACLE
REL	-	RELOCATE
REQD	-	REQUIRED
RGIP	-	REMOTE GROUND INDICATOR PANEL
RMC	-	RIGID METAL CONDUIT
RVAT	-	REDUCED VOLTAGE AUTO TRANSFORMER
SHT	-	SHEET
SIG	-	SIGNAL
SIM	-	SIMILAR
SPEC	-	SPECIFICATION
SS	-	SAFETY SWITCH
STA	-	STATION
STR	-	STARTER
SW	-	SWITCH
SWBD	-	SWITCHBOARD
SWGR	-	SWITCHGEAR
TEL	-	TELEPHONE
TFA	-	TO FLOOR ABOVE
TFB	-	TO FLOOR BELOW
TS	-	TAMPER SWITCH/TIME SWITCH
TV	-	TELEVISION
TVSS	-	TRANSIENT VOLTAGE SURGE SUPPRESSION
TVTC	-	TELEVISION TERMINAL CABINET
TYP	-	TYPICAL
UC	-	UNDER COUNTER
UG	-	UNDERGROUND
UH	-	UNIT HEATER
UNO	-	UNLESS NOTED OTHERWISE
UPS	-	UNINTERRUPTED POWER SUPPLY
V	-	VOLTAGE
VFD	-	VARIABLE FREQUENCY DRIVE
VP	-	VAPOR PROOF
W	-	WIRE
W/	-	WITH
WP	-	WEATHERPROOF
WS	-	WALL SURFACE
WT	-	WATER TIGHT
X	-	EXISTING
XFMR	-	TRANSFORMER
XP	-	EXPLOSION PROOF

GENERAL NOTES

1. ALL WORK TO COMPLY WITH 2013 CALIFORNIA ELECTRICAL CODE.
2. ALL EQUIPMENT TO BE INSTALLED OR PERMANENTLY CONNECTED (HARD WIRED) MUST BE LISTED, LABELED OR CERTIFIED BY A NATIONALLY RECOGNIZED TESTING LABORATORY.
3. SEAL ALL CONDUIT PENETRATIONS THROUGH FIRE RATED PARTITIONS WITH CSFM AND UL LISTED FIRE STOP SYSTEMS. REFER TO ARCHITECTURAL DRAWINGS FOR FIRE RATED PARTITION LOCATION.
4. PROVIDE A SEPARATE GREEN INSULATED GROUND CONDUCTOR FOR EACH CONDUIT. GROUND AT BOTH ENDS OF THE CONDUIT.
5. CONTRACTOR SHALL EXTEND WIRING FROM ALL JUNCTION BOXES, RECEPTACLES, SWITCHES, ETC. AND MAKE FINAL CONNECTION AS REQUIRED TO ALL BUILDING EQUIPMENT REQUIRING ELECTRICAL CONNECTIONS.
6. FOR PURPOSES OF CLEARNESS AND LEGIBILITY, THE ELECTRICAL DRAWINGS ARE ESSENTIALLY DIAGRAMMATIC. THE SIZE AND LOCATION OF EQUIPMENT IS SHOWN TO SCALE WHEREVER POSSIBLE. CONTRACTOR SHALL VERIFY ALL CONDITIONS, DATA INFORMATION AS INDICATED ON THE DRAWINGS AND IN THE SPECIFICATION SECTION WHERE ELECTRICAL WORK INTERFACES WITH OTHER TRADES.
7. ALL DEVICES AND EQUIPMENT INSTALLED OUTSIDE OR IN WET OR DAMP LOCATIONS SHALL BE APPROVED WEATHERPROOF.
8. PROVIDE UPDATED CIRCUIT DIRECTORIES OF AFFECTED SWITCHBOARDS AND PANELBOARDS. USE THE SCHEDULES OF THE CONTRACT ELECTRICAL DRAWINGS AND UPDATE TO AS-BUILT CONDITION.
9. CUT, PATCH AND FINISH PAINT EXISTING GYPBOARD WALLS AND CEILINGS TO CONCEAL NEW CONDUITS.
10. UNLESS OTHERWISE NOTED, ALL CONDUIT AND CONDUCTORS SHOWN ON PLANS ARE #12THWN IN 3/4" CONDUIT.
11. SEPARATELY PRICE ELECTRICAL SCOPE OF WORK FOR EACH DEDUCTIVE ALTERNATE.

DEMOLITION NOTES

1. THE ELECTRICAL DEMOLITION PLAN SHOWING EXISTING CONDITIONS HAS BEEN PREPARED BASED ON FIELD OBSERVATION AND RECORD DRAWINGS. ADDITIONAL COMPONENTS MAY EXIST WHICH DO NOT SHOW, AND SUCH ITEMS SHALL BE DEALT WITH IN A MANNER SIMILAR TO THOSE ITEMS WHICH DO SHOW. CONTRACTOR SHALL VISIT THE SITE AND BECOME FAMILIAR WITH EXISTING CONDITIONS.
2. ACCOMPLISH ALL WORK IN A NEAT WORKMANLIKE MANNER TO MINIMIZE ANY INTERFERENCE, ANNOYANCE OR INCONVENIENCE SUCH WORK MIGHT IMPOSE ON THE OWNER.
3. WHERE DEMOLITION WORK INTERFERES WITH THE OWNER'S USE OF THE PREMISES, SCHEDULE DEMOLITION WORK TO MINIMIZE INCONVENIENCE TO THE OWNER.
4. PROVIDE NEW CONDUITS AND WIRES TO MAINTAIN WIRING CONTINUITY OF EXISTING OUTLETS, LIGHT FIXTURES, FIRE ALARM, PAGING SYSTEM AND OTHER EXISTING WORK DISTURBED DUE TO DEMOLITION SCOPE SO AS TO MINIMIZE FACILITY DISRUPTION.

DEDUCTIVE ALTERNATES:

DEDUCTIVE ALTERNATE NO 2: SECONDARY CHILLED WATER SYSTEM

DO NOT DEMOLISH POWER CONNECTIONS FROM EXISTING SECONDARY CHILLED WATER PUMPS SCHP-1,2,3 BACK TO DISTRIBUTION PANEL 'NHD654A' SHOWN ON SHEETS 702-ED-101 AND ED-601. DO NOT PROVIDE POWER CONNECTIONS TO SECONDARY CHILLED WATER PUMPS SCHP-1,2,3 SHOWN ON SHEETS 702-EP-101 AND EP-601. DO NOT PROVIDE NEW 125A/3P BREAKERS AT DISTRIBUTION PANEL 'NHD654A' SHOWN ON SHEET EP-601. DO NOT PROVIDE NEW VFD UNITS TO SERVE SECONDARY CHILLED WATER PUMPS SCHP-1,2,3 SHOWN ON SHEETS 702-EP-101 AND EP-601.

DEDUCTIVE ALTERNATE NO 3: PRIMARY CHILLED WATER AND CONDENSER WATER PUMPS

DO NOT DEMOLISH POWER CONNECTIONS FROM EXISTING PRIMARY CHILLED WATER PUMPS PCHP-2,3, BACK TO 'MCC654A' SHOWN ON SHEETS 702-ED-102 AND ED-601. DO NOT PROVIDE NEW POWER CONNECTIONS TO NEW PRIMARY CHILLED WATER PUMPS PCHP-2,3, SHOWN ON SHEETS 702-EP-102 AND EP-601. DO NOT PROVIDE NEW 100A/3P BREAKERS AT DISTRIBUTION PANEL 'NHD654A' SHOWN ON SHEET EP-601. DO NOT PROVIDE NEW VFD UNITS TO SERVE PRIMARY CHILLED WATER PUMPS PCHP-2,3 SHOWN ON SHEETS 702-EP-102 AND EP-601.

DO NOT DEMOLISH POWER CONNECTIONS FROM CONDENSER WATER PUMPS CTP-2,3 BACK TO 'MCC654A' SHOWN ON SHEETS 702-ED-102 AND ED-601. DO NOT DISCONNECT AND REMOVE MCC UNIT (MCP, MOTOR STARTER, AND MOTOR OVERLOAD DEVICE) IN 'MCC654A' BUCKETS SERVING EXISTING CONDENSER WATER PUMPS CTP-2,3 SHOWN ON SHEET ED-601. DO NOT PROVIDE NEW POWER CONNECTIONS TO CONDENSER WATER PUMPS CTP-2,3 SHOWN ON SHEETS 702-EP-102 AND EP-601. DO NOT PROVIDE NEW FUSED DISCONNECT SWITCHES SHOWN ON SHEETS 702-EP-102 AND EP-601. DO NOT PROVIDE NEW MCC UNIT (MCP, MOTOR STARTER, AND MOTOR OVERLOAD DEVICE) IN 'MCC654A' BUCKETS TO SERVE CONDENSER WATER PUMPS CTP-2,3 SHOWN ON SHEET EP-601.

HILLIARD ARCHITECTS INC. COPYRIGHT

7/9/2014 2:19:53 PM

Revisions:	Date
CONFORMED CONST. DOCUMENTS	07.11.14
CONSTRUCTION DOCUMENTS	06.30.14
DESIGN DEVELOPMENT 2	06.13.14

CONSULTANTS:

Affiliated Engineers W, Inc.
123 Mission Street, 7th Floor
San Francisco, California 94105
415.764.3700

ARCHITECT/ENGINEERS:

Hilliard Architects
251 Post Street, Suite 620
San Francisco, CA 94108
Tel 415 989 6400
www.HilliardArchitects.com

Drawing Title: **ELECTRICAL LEGEND, SYMBOLS AND ABBREVIATIONS**

Approved: Project Director

Project Title: **Install New High Efficiency Water Cooled Chiller No. 1**

Location: VANCHCS; MATHER, CA

Date: 7.11.2014 | Checked: AEI | Drawn: AEI

Project Number: 612A4-14-006

Building Number: 701,702,703

Drawing Number: E-001

Dwg. of

Office of Construction and Facilities Management

Department of Veterans Affairs

VA FORM 08-6231

GENERAL NOTES:

1. UNLESS OTHERWISE NOTED, ALL EQUIPMENT SHOWN ON THE PLANS IS EXISTING.

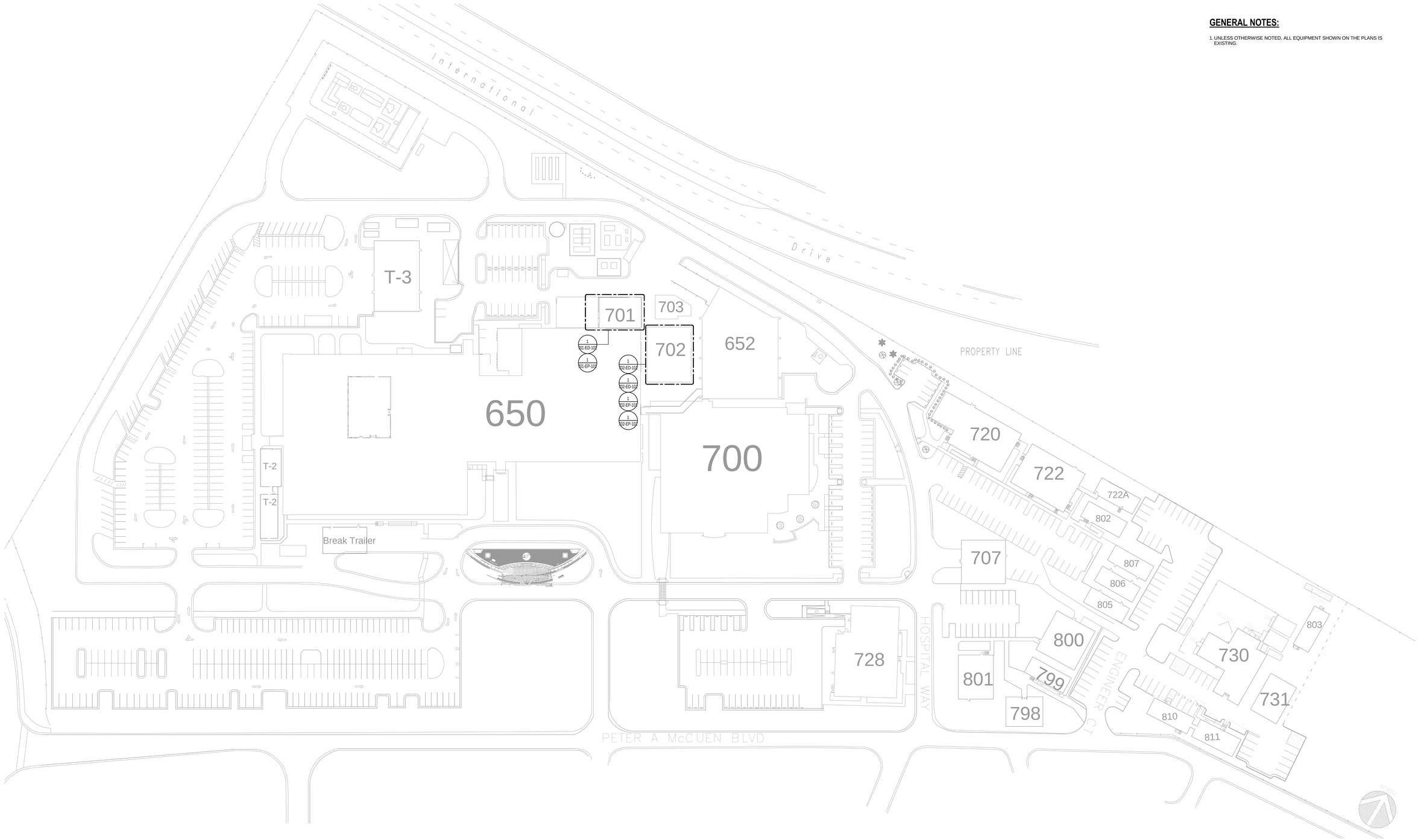

1 ELECTRICAL POWER NEW WORK PLAN - LEVEL 1
1" = 50'-0"

HILLIARD ARCHITECTS INC. COPYRIGHT

7/9/2014 2:19:57 PM

Revisions:	Date
CONFORMED CONST. DOCUMENTS	07.11.14
CONSTRUCTION DOCUMENTS	06.30.14
DESIGN DEVELOPMENT 2	06.13.14

VA FORM 08-6231

CONSULTANTS:

Affiliated Engineers®
Affiliated Engineers W, Inc.
123 Mission Street, 7th Floor
San Francisco, California 94105
415.764.3700

ARCHITECT/ENGINEERS:

Hilliard ARCHITECTS
251 Post Street, Suite 620
San Francisco, CA 94108
Tel 415 989 6400
www.HilliardArchitects.com

Drawing Title: **ELECTRICAL OVERALL SITE PLAN**

Approved: Project Director

Project Title: **Install New High Efficiency Water Cooled Chiller No. 1**

Location: VANCHCS; MATHER, CA

Date: 7.11.2014 | Checked: AEI | Drawn: AEI

Project Number: 612A4-14-006

Building Number: 701,702,703

Drawing Number: **ES-101**

Dwg. of

Office of Construction and Facilities Management

Department of Veterans Affairs

GENERAL NOTES:

1. UNLESS OTHERWISE NOTED, ALL EQUIPMENT SHOWN ON THE PLANS IS EXISTING.
2. REFER TO MECHANICAL DRAWINGS FOR CONSTRUCTION PHASING.

SHEET NOTES:

1. DEMOLISH EXISTING 600A BYPASS-ISOLATION AUTOMATIC TRANSFER SWITCH, AS PART OF MECHANICAL DEMOLITION PHASE
1. DISCONNECT AND PULL BACK CONDUCTORS FROM SWITCHBOARD NSH1000B AND EHS1001A TO TRANSFER SWITCH. DEMOLISH CONDUIT TO NEAREST STRUCTURAL SUPPORT. PROTECT REMAINING CONDUIT FOR REUSE AND EXTENSION TO NEW BYPASS-ISOLATION AUTOMATIC TRANSFER SWITCH.

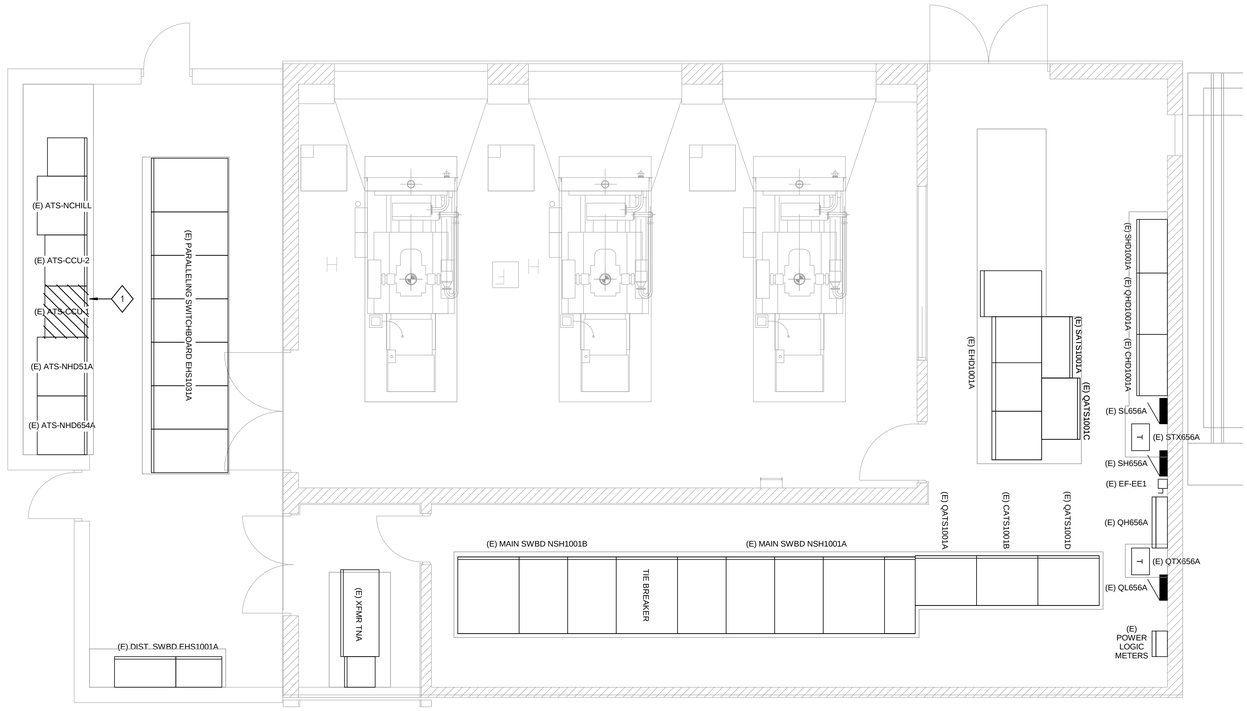

1 ELECTRICAL POWER DEMOLITION PLAN - LEVEL 1

1/4" = 1'-0"

7/9/2014 2:19:50 PM HILLIARD ARCHITECTS INC. COPYRIGHT

Revisions:	Date
CONFORMED CONST. DOCUMENTS	07.11.14
CONSTRUCTION DOCUMENTS	06.30.14
DESIGN DEVELOPMENT 2	06.13.14

CONSULTANTS:

Affiliated Engineers W, Inc.
123 Mission Street, 7th Floor
San Francisco, California 94105
415.764.3700

ARCHITECT/ENGINEERS:

Hilliard ARCHITECTS
251 Post Street, Suite 620
San Francisco, CA 94108
Tel 415 989 6400
www.HilliardArchitects.com

Drawing Title: ELECTRICAL POWER DEMOLITION PLAN - LEVEL 1

Approved: Project Director

Project Title: Install New High Efficiency Water Cooled Chiller No. 1

Location: VANCHCS; MATHER, CA

Date: 7.11.2014 | Checked: AEI | Drawn: AEI

Project Number: 612A4-14-006

Building Number: 701

Drawing Number: 701-ED-101

Dwg. of

Office of Construction and Facilities Management

Department of Veterans Affairs

VA FORM 08-6231

GENERAL NOTES:

1. UNLESS OTHERWISE NOTED, ALL EQUIPMENT SHOWN ON THE PLANS IS EXISTING.
2. REFER TO MECHANICAL DRAWINGS FOR CONSTRUCTION PHASING.

SHEET NOTES:

1. EXTEND EXISTING CONDUITS FROM MAIN SWITCHBOARD NHS1001B, AND FROM EMERGENCY DISTRIBUTION SWITCHBOARD EHS1001A, TO NEW 800A BYPASS AUTOMATIC TRANSFER SWITCH AS PART OF MECHANICAL NEW WORK PHASE 1. TAKE ALL MEASUREMENTS AND FURNISH EQUIPMENT AS REQUIRED TO FIT INTO THE VACATED SPACE ON THE EXISTING EQUIPMENT PAD.

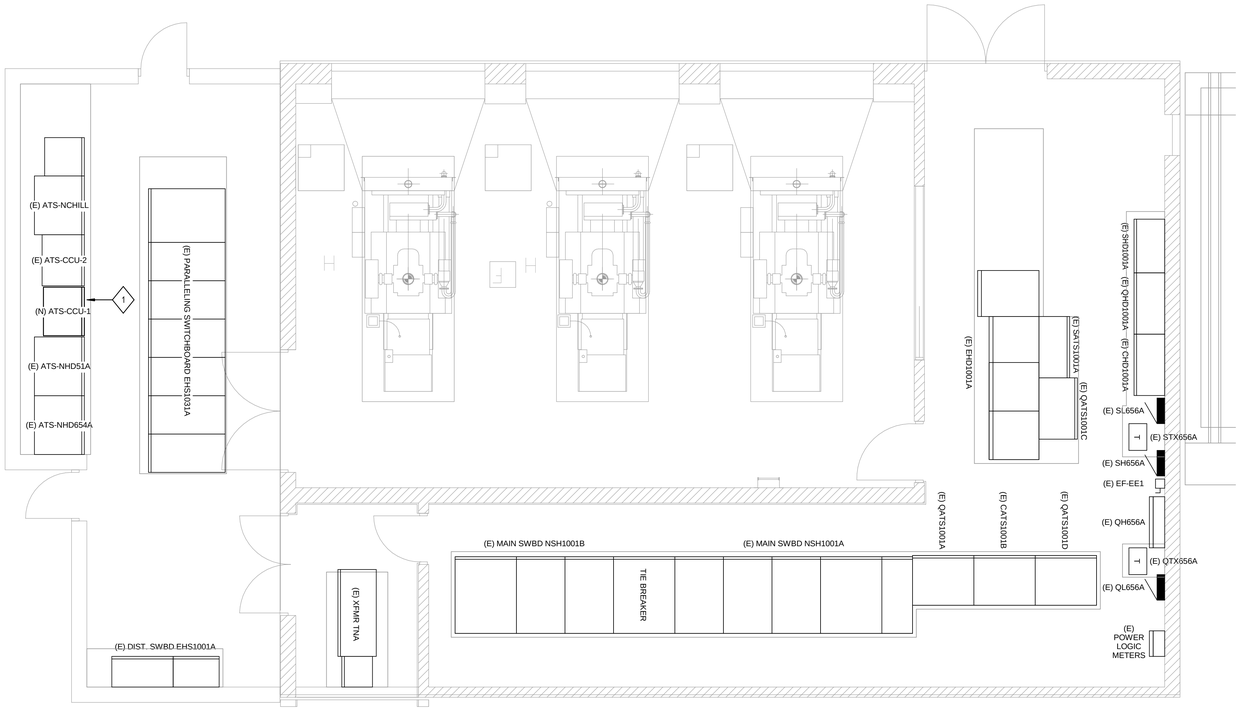

1 ELECTRICAL POWER NEW WORK PLAN - LEVEL 1

1/4" = 1'-0"

HILLIARD ARCHITECTS INC. COPYRIGHT

7/9/2014 2:19:50 PM

Revisions:	Date
CONFORMED CONST. DOCUMENTS	07.11.14
CONSTRUCTION DOCUMENTS	06.30.14
DESIGN DEVELOPMENT 2	06.13.14

CONSULTANTS:

Affiliated Engineers®

Affiliated Engineers W, Inc.
123 Mission Street, 7th Floor
San Francisco, California 94105
415.764.3700

ARCHITECT/ENGINEERS:

Hilliard ARCHITECTS

251 Post Street, Suite 620
San Francisco, CA 94108
Tel 415 989 6400
www.HilliardArchitects.com

Drawing Title: ELECTRICAL POWER NEW WORK PLAN - LEVEL 1

Approved: Project Director

Project Title: Install New High Efficiency Water Cooled Chiller No. 1

Location: VANCHCS; MATHER, CA

Date: 7.11.2014 | Checked: AEI | Drawn: AEI

Project Number: 612A4-14-006

Building Number: 701

Drawing Number: 701-EP-101

Dwg. of

Office of Construction and Facilities Management

Department of Veterans Affairs

VA FORM 08-6231

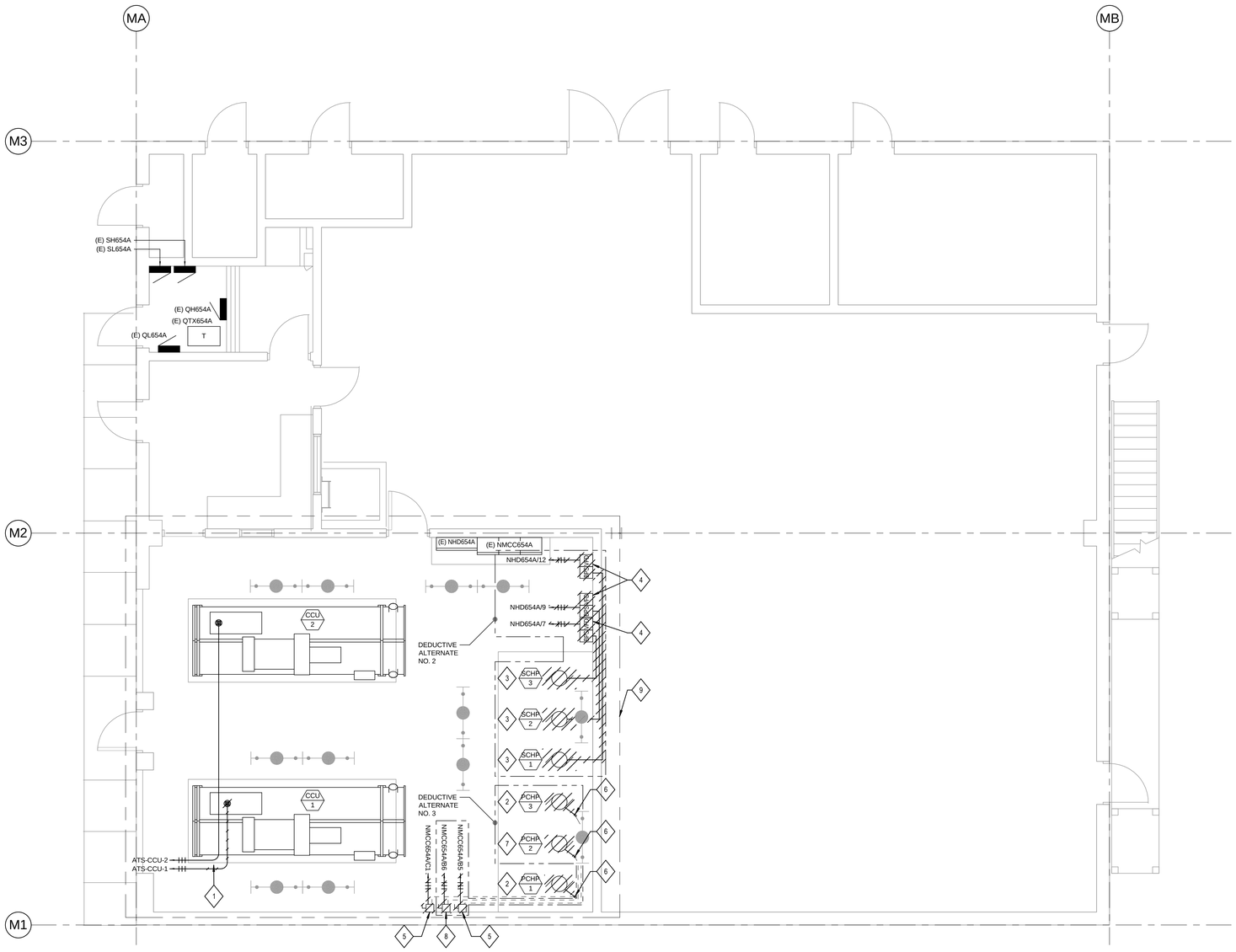

1 ELECTRICAL POWER DEMO PLAN - LEVEL 1

1/4" = 1'-0"

GENERAL NOTES:

1. UNLESS OTHERWISE NOTED, ALL EQUIPMENT SHOWN ON THE PLANS IS EXISTING.
2. REFER TO MECHANICAL DRAWINGS FOR CONSTRUCTION PHASING.

DEMOLITION SHEET NOTES:

1. DEMOLISH FROM EXISTING CHILLER CCU-1 TO ATS-CCU-1 AS PART OF MECHANICAL DEMOLITION PHASE 1. DEMOLISH EXISTING CONDUITS TO NEAREST STRUCTURAL SUPPORT. PROTECT REMAINING CONDUIT FOR REUSE AND EXTENSION TO NEW CHILLER CCU-1 POINT OF CONNECTION.
2. DISCONNECT AND REMOVE POWER CONNECTION TO EXISTING PUMP BACK TO MOTOR CONTROL CENTER NMCC654A, AS PART OF MECHANICAL DEMOLITION PHASE 1.
3. DEMOLISH CONDUCTORS FROM EXISTING PUMP BACK TO DISTRIBUTION PANEL NHD654A AS PART OF MECHANICAL DEMOLITION PHASE 2.
4. DEMOLISH EXISTING VFD-BYPASS SWITCH SERVING SECONDARY WATER PUMPS AS PART OF MECHANICAL DEMOLITION PHASE 2.
5. DEMOLISH EXISTING DISCONNECT SWITCH, AS PART OF MECHANICAL DEMOLITION PHASE 1.
6. CUT UNDERGROUND CONDUITS FLUSH WITH FLOOR AND ABANDON IN PLACE AFTER REMOVAL OF CONDUCTORS. GRIND DOWN 1" BELOW FLOOR, AND FILL VOID WITH NON-SHRINK GROUT.
7. DEMOLISH CONDUCTORS AND CONDUIT FROM EXISTING PUMP BACK TO MOTOR CONTROL CENTER NMCC654A, AS PART OF MECHANICAL DEMOLITION PHASE 2.
8. DEMOLISH EXISTING DISCONNECT SWITCH, AS PART OF MECHANICAL DEMOLITION PHASE 2.
9. REMOVE ALL EXISTING LIGHT FIXTURES WITHIN EXISTING MECHANICAL CHILLER ROOM -- (2) 4'-0" LINEAR FLUORESCENT STRIP LIGHTS AND (5) 8'-0" LINEAR FLUORESCENT STRIP LIGHTS -- TO ACOMMODATE PIPING DEMOLITION AND NEW WORK. RELOCATE AND RE-INSTALL EACH LIGHT FIXTURE UP TO 15'-0" AWAY FROM ORIGINAL LOCATION TO CLEAR OBSTRUTIONS. EXTEND CONDUIT AND WIRING AS REQUIRED TO NEW FIXTURE LOCATIONS.

HILLIARD ARCHITECTS INC. COPYRIGHT

7/9/2014 2:19:51 PM

Revisions:	Date
CONFORMED CONST. DOCUMENTS	07.11.14
CONSTRUCTION DOCUMENTS	06.30.14
DESIGN DEVELOPMENT 2	06.13.14

VA FORM 08-6231

CONSULTANTS:

Affiliated Engineers W, Inc.
123 Mission Street, 7th Floor
San Francisco, California 94105
415.764.3700

ARCHITECT/ENGINEERS:

251 Post Street, Suite 620
San Francisco, CA 94108
Tel 415 989 6400
www.HilliardArchitects.com

Drawing Title: ELECTRICAL POWER DEMOLITION PLAN - LEVEL 1

Approved: Project Director

Project Title: Install New High Efficiency Water Cooled Chiller No. 1

Location: VANCHCS; MATHER, CA

Date: 7.11.2014 | Checked: AEI | Drawn: AEI

Project Number: 612A4-14-006

Building Number: 702

Drawing Number: 702-ED-101

Dwg. of

Office of Construction and Facilities Management

Department of Veterans Affairs

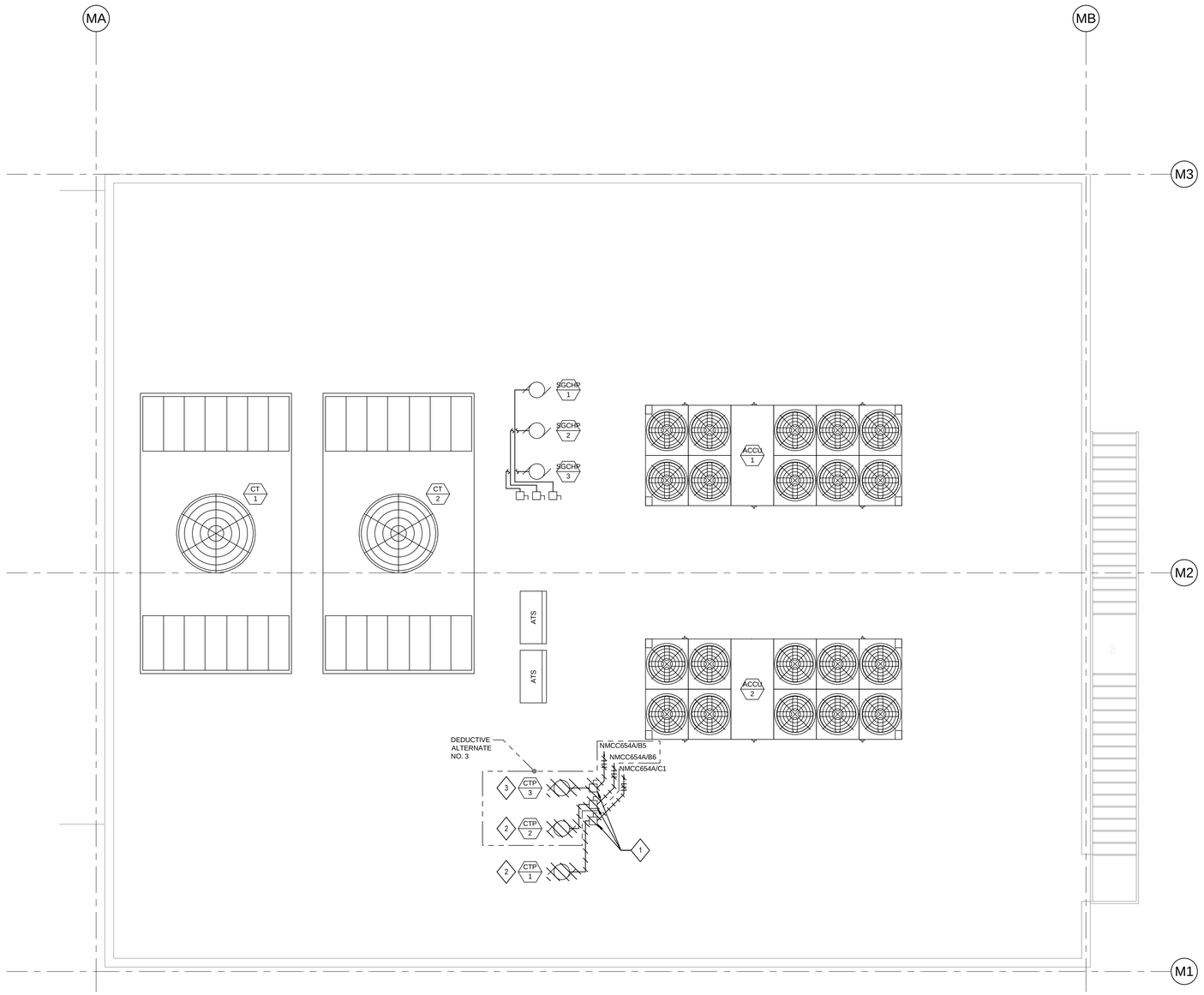

GENERAL NOTES:

1. UNLESS OTHERWISE NOTED, ALL EQUIPMENT SHOWN ON THE PLANS IS EXISTING.
2. REFER TO MECHANICAL DRAWINGS FOR CONSTRUCTION PHASING.
3. SEAL WATERTIGHT ALL DEMOLISHED CONDUIT ROOF PENETRATIONS.

DEMOLITION SHEET NOTES:

1. DISCONNECT AND REMOVE EXISTING 100A DISCONNECT SWITCHES.
2. DEMOLISH CONDUCTORS AND CONDUIT FROM EXISTING COOLING TOWER PUMPS BACK TO MOTOR CONTROL CENTER NMCC654A, AS PART OF MECHANICAL DEMOLITION PHASE 1.
3. DEMOLISH CONDUCTORS AND CONDUIT FROM EXISTING COOLING TOWER PUMP BACK TO MOTOR CONTROL CENTER NMCC654A, AS PART OF MECHANICAL DEMOLITION PHASE 2.

1 ELECTRICAL POWER DEMOLITION PLAN - ROOF

1/4" = 1'-0"

7/9/2014 2:19:51 PM HILLIARD ARCHITECTS INC. COPYRIGHT

Revisions:	Date
CONFORMED CONST. DOCUMENTS	07.11.14
CONSTRUCTION DOCUMENTS	06.30.14
DESIGN DEVELOPMENT 2	06.13.14

CONSULTANTS:

Affiliated Engineers®
Affiliated Engineers W, Inc.
123 Mission Street, 7th Floor
San Francisco, California 94105
415.764.3700

ARCHITECT/ENGINEERS:

Hilliard ARCHITECTS
251 Post Street, Suite 620
San Francisco, CA 94108
Tel 415 989 6400
www.HilliardArchitects.com

Drawing Title: ELECTRICAL POWER DEMOLITION PLAN - ROOF

Approved: Project Director

Project Title: Install New High Efficiency Water Cooled Chiller No. 1

Location: VANCHCS; MATHER, CA

Date: 7.11.2014 | Checked: AEI | Drawn: AEI

Project Number: 612A4-14-006

Building Number: 702

Drawing Number: 702-ED-102

Dwg. of

Office of Construction and Facilities Management

Department of Veterans Affairs

VA FORM 08-6231

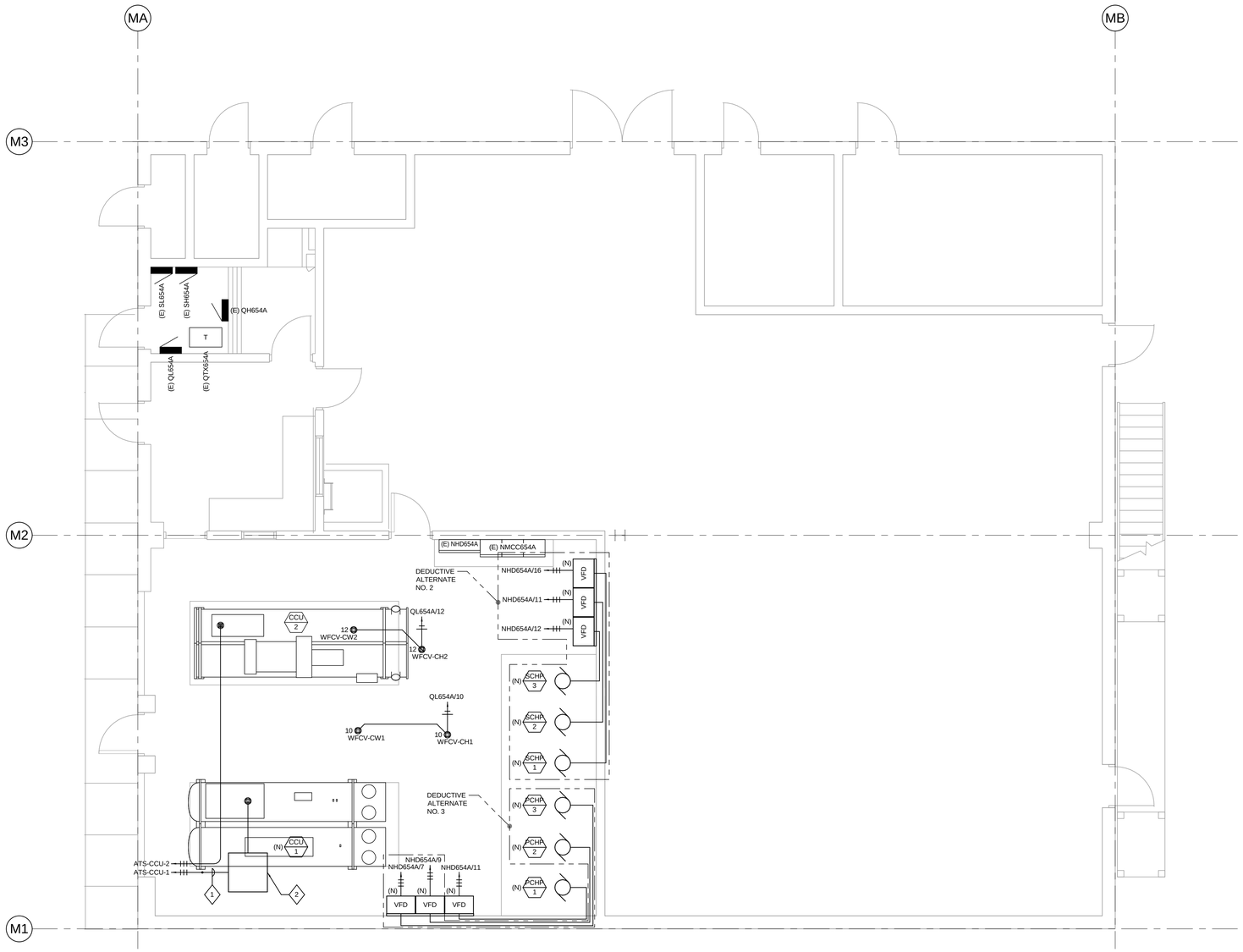

1 ELECTRICAL POWER NEW WORK PLAN - LEVEL 1

1/4" = 1'-0"

GENERAL NOTES:

1. UNLESS OTHERWISE NOTED, ALL EQUIPMENT SHOWN ON THE PLANS IS EXISTING.
2. REFER TO MECHANICAL DRAWINGS FOR CONSTRUCTION PHASING.

SHEET NOTES:

1. EXTEND CONDUIT AND WIRING FOR NEW CHILLER UNIT CCU-1 TO NEW POINT OF CONNECTION.
2. PROVIDE 36"L X 36"W X 18"H JUNCTION BOX HIGH IN CEILING SPACE SUCH THAT IN THE FUTURE, CONDUIT FROM THE JUNCTION BOX TO CCU-1 CAN BE REMOVED TO ALLOW CCU-1 TO BE SLID INTO THE POSITION OF EXISTING CHILLER CCU-2.

HILLIARD ARCHITECTS INC. COPYRIGHT
7/9/2014 2:19:52 PM

Revisions:	Date
CONFORMED CONST. DOCUMENTS	07.11.14
CONSTRUCTION DOCUMENTS	06.30.14
DESIGN DEVELOPMENT 2	06.13.14

VA FORM 08-6231

CONSULTANTS:

Affiliated Engineers
Affiliated Engineers W, Inc.
123 Mission Street, 7th Floor
San Francisco, California 94105
415.764.3700

ARCHITECT/ENGINEERS:

Hilliard ARCHITECTS
251 Post Street, Suite 620
San Francisco, CA 94108
Tel 415 989 6400
www.HilliardArchitects.com

Drawing Title: ELECTRICAL POWER NEW WORK PLAN - LEVEL 1

Approved: Project Director

Project Title: Install New High Efficiency Water Cooled Chiller No. 1

Location: VANCHCS; MATHER, CA

Date: 7.11.2014 | Checked: AEI | Drawn: AEI

Project Number: 612A4-14-006

Building Number: 702

Drawing Number: 702-EP-101

Dwg. of

Office of Construction and Facilities Management

Department of Veterans Affairs

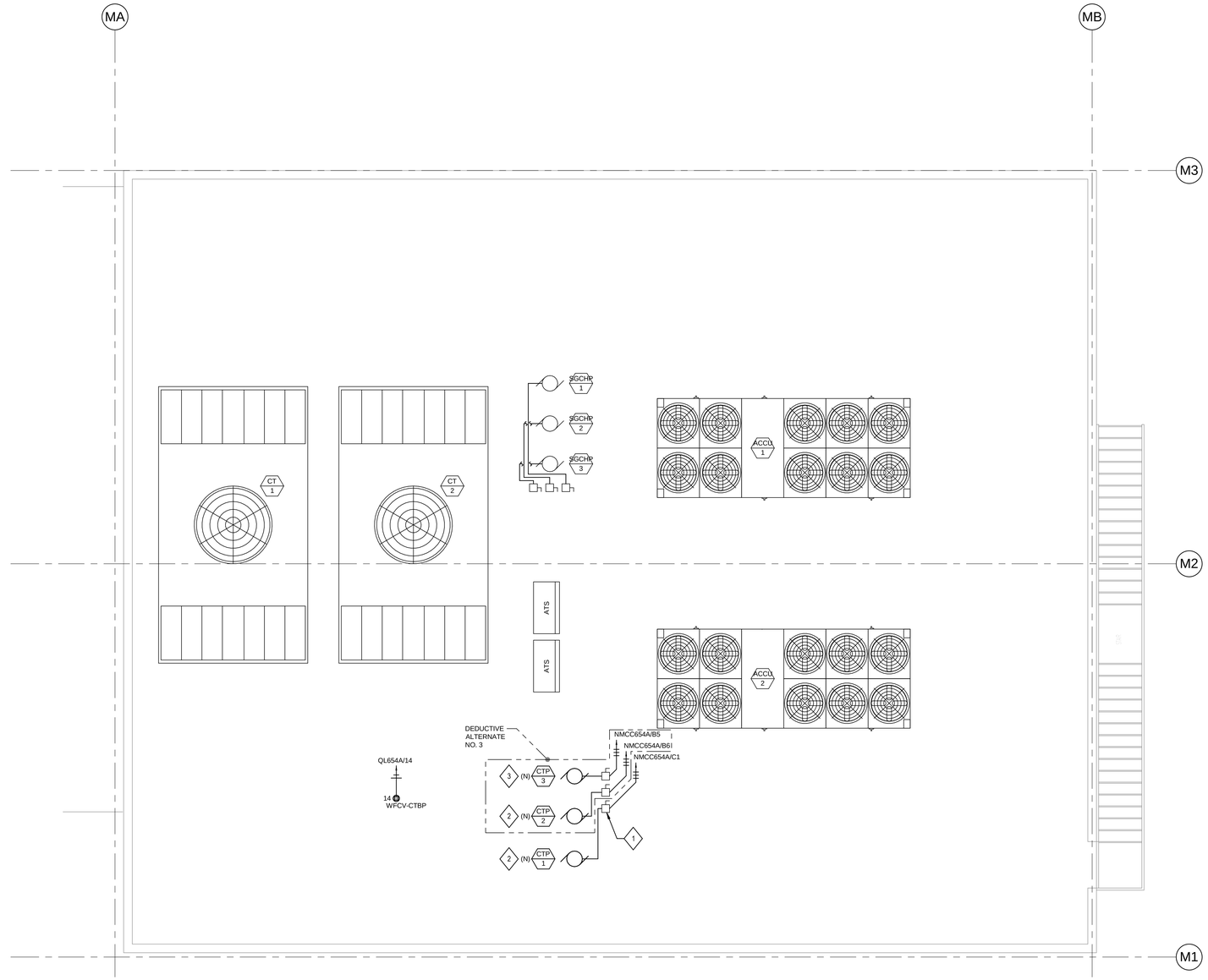

GENERAL NOTES:

1. UNLESS OTHERWISE NOTED, ALL EQUIPMENT SHOWN ON THE PLANS IS EXISTING.
2. REFER TO MECHANICAL DRAWINGS FOR CONSTRUCTION PHASING.
3. SEAL WATERTIGHT ALL NEW ROOF CONDUIT PENETRATIONS.

SHEET NOTES:

1. PROVIDE NEW 100A FUSED DISCONNECT SWITCHES. PROVIDE NEW UNISTRUT MOUNTING FRAME AS NECESSARY.
2. PROVIDE POWER CONNECTIONS TO NEW COOLING TOWER PUMPS FROM MOTOR CONTROL CENTER NMCC654A, AS PART OF MECHANICAL NEW WORK PHASE 1.
3. PROVIDE POWER CONNECTIONS TO NEW COOLING TOWER PUMP FROM MOTOR CONTROL CENTER NMCC654A, AS PART OF MECHANICAL NEW WORK PHASE 2.

1 ELECTRICAL POWER NEW WORK PLAN - ROOF

1/4" = 1'-0"

7/9/2014 2:19:53 PM HILLIARD ARCHITECTS INC. COPYRIGHT

Revisions:	Date
CONFORMED CONST. DOCUMENTS	07.11.14
CONSTRUCTION DOCUMENTS	06.30.14
DESIGN DEVELOPMENT 2	06.13.14

VA FORM 08-6231

CONSULTANTS:

Affiliated Engineers
Affiliated Engineers W, Inc.
123 Mission Street, 7th Floor
San Francisco, California 94105
415.764.3700

ARCHITECT/ENGINEERS:

Hilliard ARCHITECTS
251 Post Street, Suite 620
San Francisco, CA 94108
Tel 415 989 6400
www.HilliardArchitects.com

Drawing Title: ELECTRICAL POWER NEW WORK PLAN - ROOF

Approved: Project Director

Project Title: Install New High Efficiency Water Cooled Chiller No. 1

Location: VANCHCS; MATHER, CA

Date: 7.11.2014 | Checked: AEI | Drawn: AEI

Project Number: 612A4-14-006

Building Number: 702

Drawing Number: 702-EP-102

Dwg. of

Office of Construction and Facilities Management

Department of Veterans Affairs

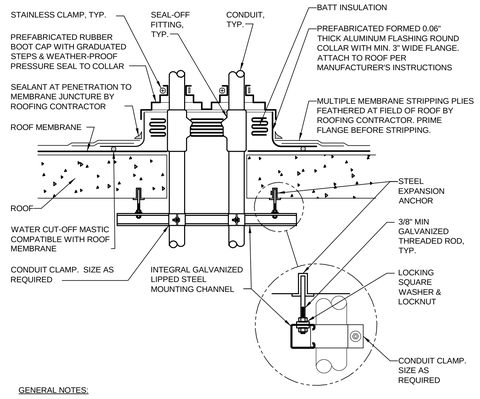

GENERAL NOTES:

1. MAINTAIN A MINIMUM CLEARANCE OF 12" [308mm] ON ALL SIDES OF ROOF PENETRATION FROM WALLS, CURBS, AND OTHER PROJECTIONS TO FACILITATE PROPER FLASHING.
2. FLANGES OF ADJACENT FLASHINGS SHALL NOT BE CUT OR OVERLAPPED.
3. VERIFY ROOF & STRUCTURAL SYSTEM WITH ARCHITECT.
4. COORDINATE FLASHING INSTALLATION WITH ROOFING CONTRACTOR TO ENSURE PROPER METHODS & MATERIALS ARE USED TO MAINTAIN ROOF WARRANTY.

1 ROOF PENETRATION DETAIL

SCALE: NONE

HILLIARD ARCHITECTS INC. COPYRIGHT

7/9/2014 2:19:53 PM

Revisions:	Date
CONFORMED CONST. DOCUMENTS	07.11.14
CONSTRUCTION DOCUMENTS	06.30.14
DESIGN DEVELOPMENT 2	06.13.14

CONSULTANTS:

Affiliated Engineers®
Affiliated Engineers W, Inc.
123 Mission Street, 7th Floor
San Francisco, California 94105
415.764.3700

ARCHITECT/ENGINEERS:

Hilliard ARCHITECTS
251 Post Street, Suite 620
San Francisco, CA 94108
Tel 415 989 6400
www.HilliardArchitects.com

Drawing Title: ELECTRICAL DETAILS

Approved: Project Director

Project Title: Install New High Efficiency Water Cooled Chiller No. 1

Location: VANCHCS; MATHER, CA

Date: 7.11.2014 | Checked: AEI | Drawn: AEI

Project Number: 612A4-14-006

Building Number: 701,702,703

Drawing Number: E-501

Dwg. of

Office of Construction and Facilities Management

Department of Veterans Affairs

VA FORM 08-6231

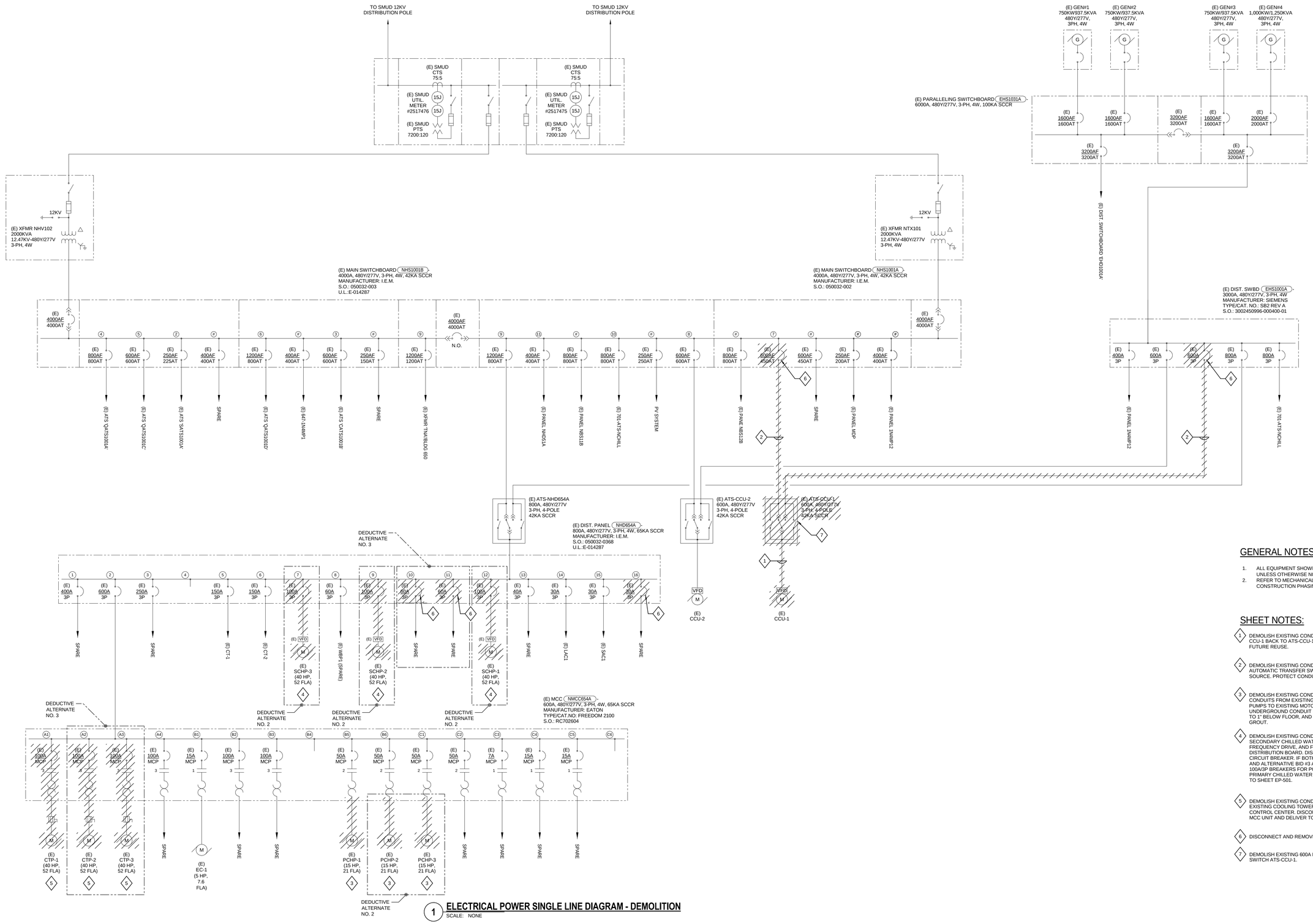

1 **ELECTRICAL POWER SINGLE LINE DIAGRAM - DEMOLITION**
SCALE: NONE

GENERAL NOTES:

1. ALL EQUIPMENT SHOWN ON DIAGRAM IS EXISTING UNLESS OTHERWISE NOTED.
2. REFER TO MECHANICAL DRAWINGS FOR CONSTRUCTION PHASING.

SHEET NOTES:

1. DEMOLISH EXISTING CONDUCTORS FROM EXISTING CHILLER CCU-1 BACK TO ATS-CCU-1. PROTECT CONDUITS FOR FUTURE REUSE.
2. DEMOLISH EXISTING CONDUCTORS FROM EXISTING BYPASS AUTOMATIC TRANSFER SWITCH ATS-CCU-1 BACK TO SOURCE. PROTECT CONDUITS FOR FUTURE REUSE.
3. DEMOLISH EXISTING CONDUCTORS AND EXPOSED CONDUITS FROM EXISTING PRIMARY CHILLED WATER PUMPS TO EXISTING MOTOR CONTROL CENTER. CUT UNDERGROUND CONDUIT FLUSH WITH FLOOR, GRIND DOWN TO 1" BELOW FLOOR, AND FILL VOID WITH NON-SHRINK GROUT.
4. DEMOLISH EXISTING CONDUCTORS AND CONDUIT FROM SECONDARY CHILLED WATER PUMPS BACK TO VARIABLE FREQUENCY DRIVE, AND FROM VFD DRIVE BACK TO DISTRIBUTION BOARD. DISCONNECT AND REMOVE EXISTING CIRCUIT BREAKER. IF BOTH DEDUCTIVE ALTERNATIVE BID #2 AND ALTERNATIVE BID #3 ARE NOT SELECTED, REUSE THE 100A/3P BREAKERS FOR POWER CONNECTIONS TO (N) PRIMARY CHILLED WATER PUMPS PCHP-1, 2, AND 3. REFER TO SHEET EP-501.
5. DEMOLISH EXISTING CONDUCTORS AND CONDUIT FROM EXISTING COOLING TOWER PUMPS BACK TO MOTOR CONTROL CENTER. DISCONNECT AND REMOVE ASSOCIATED MCC UNIT AND DELIVER TO OWNER FOR USE AS SPARE.
6. DISCONNECT AND REMOVE EXISTING CIRCUIT BREAKER.
7. DEMOLISH EXISTING 600A BYPASS AUTOMATIC TRANSFER SWITCH ATS-CCU-1.

Revisions:	Date
CONFORMED CONST. DOCUMENTS	07.11.14
CONSTRUCTION DOCUMENTS	06.30.14
DESIGN DEVELOPMENT 2	06.13.14

CONSULTANTS:

Affiliated Engineers®

Affiliated Engineers W, Inc.
123 Mission Street, 7th Floor
San Francisco, California 94105
415.764.3700

ARCHITECT/ENGINEERS:

Hilliard ARCHITECTS

251 Post Street, Suite 620
San Francisco, CA 94108
Tel 415 989 6400
www.HilliardArchitects.com

Drawing Title: **ELECTRICAL POWER SINGLE LINE DIAGRAM - DEMOLITION**

Approved: Project Director

Project Title: **Install New High Efficiency Water Cooled Chiller No. 1**

Location: VANCHCS; MATHER, CA

Date: 7.11.2014 | Checked: AEI | Drawn: AEI

Project Number: 612A4-14-006

Building Number: 701,702,703

Drawing Number: **ED-601**

Dwg. of

Office of Construction and Facilities Management

Department of Veterans Affairs

HILLIARD ARCHITECTS INC. COPYRIGHT

7/9/2014 2:19:54 PM

VA FORM 08-6231

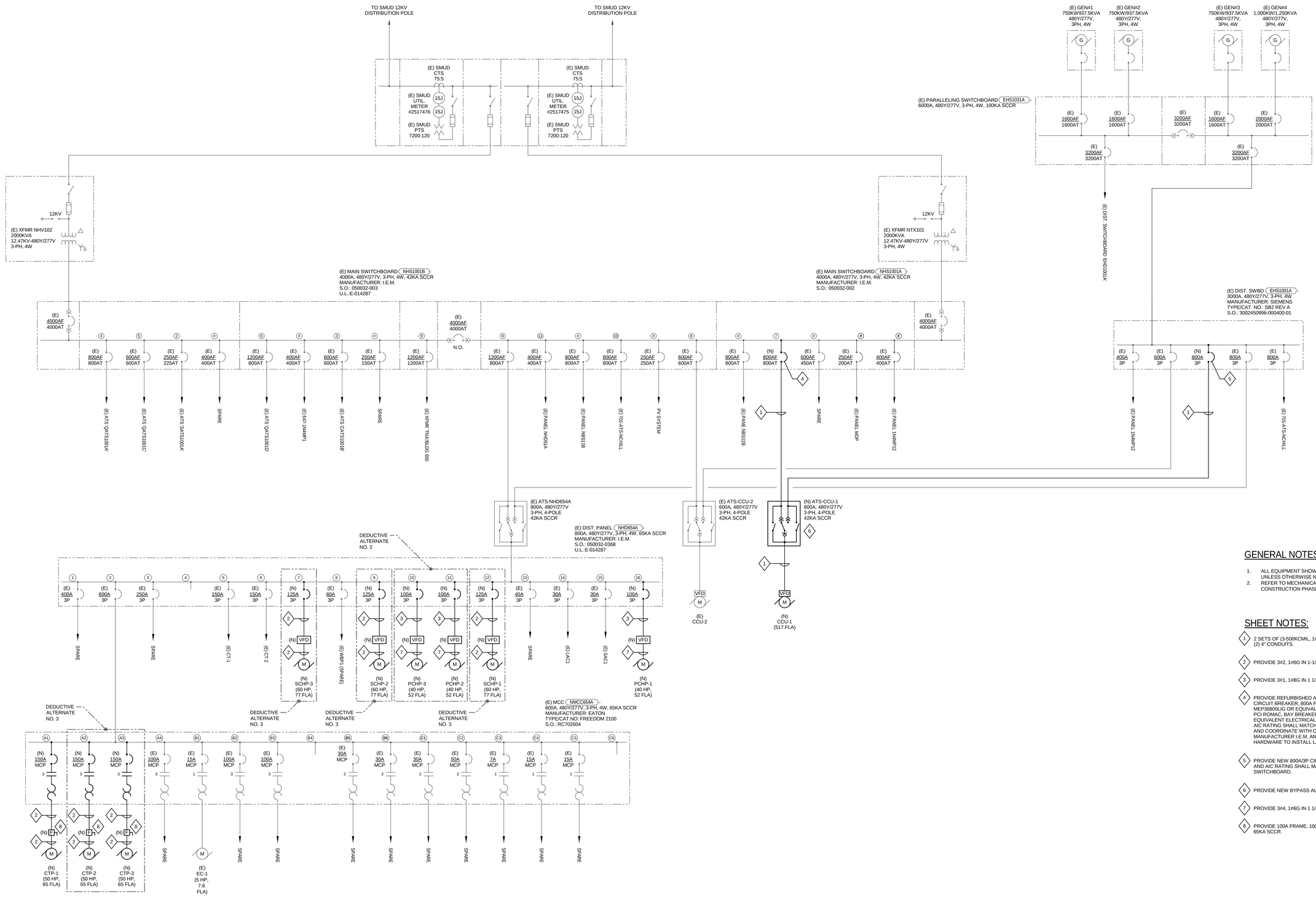

1 **ELECTRICAL POWER SINGLE LINE DIAGRAM - NEW WORK**
SCALE: NONE

GENERAL NOTES:

1. ALL EQUIPMENT SHOWN ON DIAGRAM IS EXISTING UNLESS OTHERWISE NOTED.
2. REFER TO MECHANICAL DRAWINGS FOR CONSTRUCTION PHASING.

SHEET NOTES:

1. 2 SETS OF (3-500KCMIL, 1#1/0G). PULL THROUGH EXISTING (2) 4" CONDUITS.
2. PROVIDE 3#2, 1#6G IN 1-1/4" C.
3. PROVIDE 3#1, 1#8G IN 1 1/4"C.
4. PROVIDE REFURBISHED AND TESTED ELECTRONIC TRIP CIRCUIT BREAKER, 800A FRAME WITH 800A PLUG, SQUARE-D MEP36800LIG OR EQUIVALENT. PROCURE BREAKER FROM PCI ROMAC, BAY BREAKERS INC., OR APPROVED EQUIVALENT ELECTRICAL SUPPLIER. BREAKER TYPE AND AIC RATING SHALL MATCH MAIN SWITCHBOARD. CONTACT AND COORDINATE WITH ORIGINAL SWITCHBOARD MANUFACTURER I.E.M. AND PROVIDE NEW MOUNTING HARDWARE TO INSTALL LARGER REFURBISHED BREAKER.
5. PROVIDE NEW 800A/3P CIRCUIT BREAKER. BREAKER TYPE AND AIC RATING SHALL MATCH DISTRIBUTION SWITCHBOARD.
6. PROVIDE NEW BYPASS AUTOMATIC TRANSFER SWITCH.
7. PROVIDE 3#4, 1#6G IN 1 1/4"C.
8. PROVIDE 100A FRAME, 100A FUSED DISCONNECT SWITCH, 65KA SCCR.

Revisions:	Date
CONFORMED CONST. DOCUMENTS	07.11.14
CONSTRUCTION DOCUMENTS	06.30.14
DESIGN DEVELOPMENT 2	06.13.14

CONSULTANTS:

AEI Affiliated Engineers®
Affiliated Engineers W, Inc.
123 Mission Street, 7th Floor
San Francisco, California 94105
415.764.3700

ARCHITECT/ENGINEERS:

Hilliard ARCHITECTS
251 Post Street, Suite 620
San Francisco, CA 94108
Tel 415 989 6400
www.HilliardArchitects.com

Drawing Title: **ELECTRICAL POWER SINGLE LINE DIAGRAM - NEW WORK**

Approved: Project Director

Project Title: **Install New High Efficiency Water Cooled Chiller No. 1**

Location: VANCHCS; MATHER, CA

Date: 7.11.2014 | Checked: AEI | Drawn: AEI

Project Number: 612A4-14-006

Building Number: 701,702,703

Drawing Number: EP-601

Dwg. of

Office of Construction and Facilities Management
Department of Veterans Affairs

VA FORM 08-6231

HILLIARD ARCHITECTS INC. COPYRIGHT

7/9/2014 2:19:54 PM

VOLTAGE: 208Y 120V
PHASE / WIRE: 3P / 4W

(E) Panel QL654A

LUGS: MLO
BUS AMPACITY: 100

MOUNTING: SURFACE
BRANCH: EQUIPMENT
SCCR RATING: 22,000

LOAD DESCRIPTION	NOTE	A	B	C	CB	CKT.	CKT.	CB	A	B	C	NOTE	LOAD DESCRIPTION
(E) JOHNSON CONTROLS - ROOF					20/1	1	2	20/2					(E) EC-2
(E) REC					20/1	3	4	-					-
(E) REC					20/1	5	6	20/1					(E) EF-E6
(E) REC					20/1	7	8	20/1					(E) WS-1
(E) REC					20/1	9	10	20/1	0.32				(N) WFCV-CW1, WFCV-CH1
(E) MED. AIR COMP.					20/1	11	12	20/1		0.32			(N) WFCV-CW2, WFCV-CH2
(E) OFFICE A/C					20/1	13	14	20/1	0.18				(N) WFCV-CTBP
(E) DRYER A/C					20/1	15	16	20/1					(E) DHW F.O. PUMPS
(E) CTRL TRANSFORMER					20/1	17	18	20/1					(E) DHW. THERM. CTRL TANK RECIRC. P.
(E) EC-1, EC-3, PUMP	1				20/2	19	20	20/1					(E) REC - EAST
-	-				-	21	22	20/1					(E) REC - EAST
(E) EF-E4, EF-E5					20/1	23	24	20/1					SPARE
(E) J.C. INTEQ. PANEL					20/1	25	26	20/1					SPARE
(E) TUBE BRUSH, TANK FM HRN/STRBE					20/1	27	28	20/1					(E) REC. - CAN. RM.
(E) COMP. DRYER					20/1	29	30	20/1					SPARE
SPARE					20/1	31	32	20/1					SPARE
SPARE					20/1	33	34	20/1					SPARE
SPARE					20/1	35	36	20/1					SPARE
SPARE					20/1	37	38	20/1					(E) MAIN GAS VALVE SHUNT TRIP CTRL
SPARE	1				30/2	39	40	20/2				1	(E) MAIN GAS VALVE POWER
-	-				-	41	42	-				-	-

LOAD SUMMARY		CONN. KVA	NEC FACTOR	NEC KVA
MOTOR LOADS		0.00	100%	0.00
ADD'L 25% OF LARGEST MOTOR FOR DEMAND: 25% x	0		25%	0.00
LIGHTING / CONTINUOUS LOADS		0.00	125%	0.00
RECEPTACLES (FIRST 10KVA)		0.00	100%	0.00
RECEPTACLES (OVER 10KVA)		0.00	50%	0.00
EQUIPMENT LOADS		0.64	100%	0.64
	TOTALS:	0.64		0.64

TOTAL CONNECTED			TOTAL NEC		
PHASE A:	0.00	KVA	PHASE A:	0.00	KVA
PHASE B:	0.32	KVA	PHASE B:	0.32	KVA
PHASE C:	0.32	KVA	PHASE C:	0.32	KVA
	1.8	AMPS		2.0	AMPS

Notes:
1. HANDLE TIE CONNECTING SINGLE POLE BREAKERS

7/9/2014 2:19:55 PM HILLIARD ARCHITECTS INC. COPYRIGHT

Revisions:	Date
CONFORMED CONST. DOCUMENTS	07.11.14
CONSTRUCTION DOCUMENTS	06.30.14
DESIGN DEVELOPMENT 2	06.13.14

CONSULTANTS:

Affiliated Engineers W, Inc.
123 Mission Street, 7th Floor
San Francisco, California 94105
415.764.3700

ARCHITECT/ENGINEERS:

251 Post Street, Suite 620
San Francisco, CA 94108
Tel 415 989 6400
www.HilliardArchitects.com

Drawing Title: **ELECTRICAL SCHEDULES**

Approved: Project Director

Project Title: **Install New High Efficiency Water Cooled Chiller No. 1**

Location: VANCHCS; MATHER, CA

Date: 7.11.2014 | Checked: AEI | Drawn: AEI

Project Number: 612A4-14-006

Building Number: 701,702,703

Drawing Number: EP-602

Dwg. of

Office of Construction and Facilities Management

Department of Veterans Affairs

VA FORM 08-6231