PLOTTED BY: ADAMS, MARK 7/29/2014 2:47 PM
M:\2011\110049_VADT_EXPANDED\DRAWINGS\00_CIVIL\RE-BIDNC-500 GENERAL DETAILS.DWG - C-500 GENERAL DETAILS
C2AE.STANDARD.STB

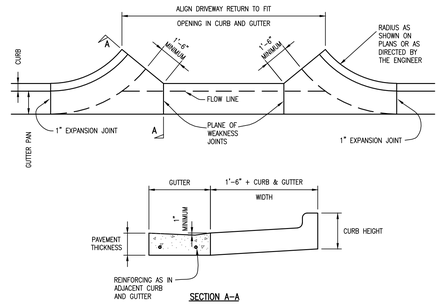

TYPE M DRIVEWAY OPENING

NO SCALE

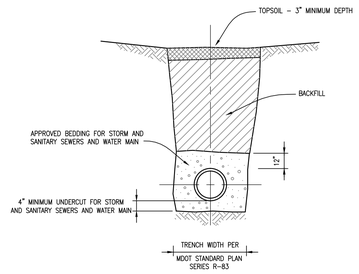

NORMAL TRENCH BACKFILL

NO SCALE

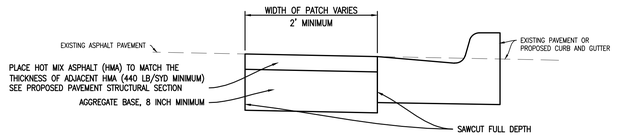

PAVEMENT REPLACEMENT DETAIL

TO APPLY: LOCATIONS OF PAVEMENT REMOVAL AND REPLACEMENT

SCALE: NOT TO SCALE

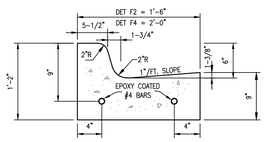

JOINT SPACING
1. CONTRACTION JOINTS - 10' SPACING
2. 1" FIBER JOINTS
   - AT SPRING POINTS OF RADIUS AT INTERSECTIONS
   - AT CONTRACTION JOINTS EACH SIDE OF CATCH BASINS
   - MAXIMUM 400' INTERVALS

MDOT CURB & GUTTER DETAIL F2 & F4

NO SCALE

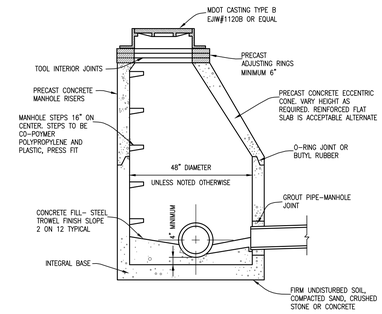

STANDARD STORM MANHOLE

NO SCALE

APPROVED DATE: 2-01-12
DETAIL: 403-3B

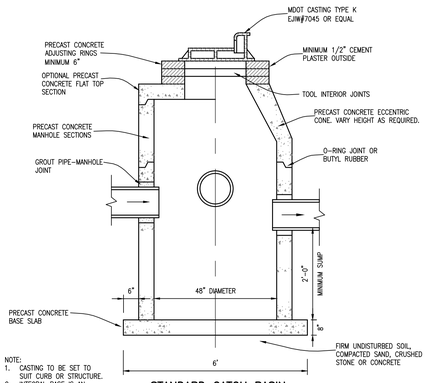

NOTE:
1. CASTING TO BE SET TO SUIT CURB OR STRUCTURE.
2. INTEGRAL BASE IS AN ACCEPTABLE ALTERNATE.

STANDARD CATCH BASIN

NO SCALE

APPROVED DATE: 2-01-12
DETAIL: 403-2B

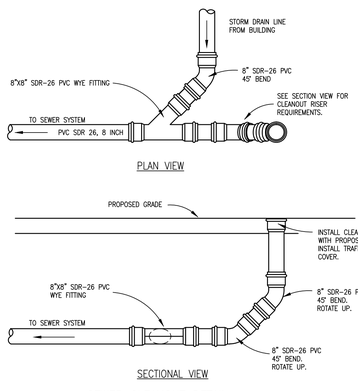

SEWER CLEANOUT DETAIL

NO SCALE

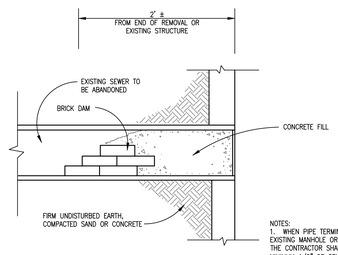

NOTES:
1. WHEN PIPE TERMINATES IN AN EXISTING MANHOLE OR CATCH BASIN, THE CONTRACTOR SHALL APPLY A MINIMUM 1/2" OF CEMENT PLASTER FLUSH WITH SURFACE.
2. OTHER METHODS OF BULKHEADING PIPES SHALL BE APPROVED BY THE ENGINEER PRIOR TO CONSTRUCTION.

SEWER BULKHEAD DETAIL

NO SCALE

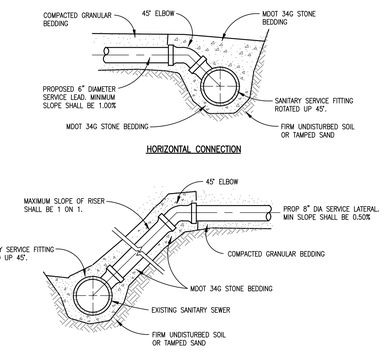

SANITARY SERVICE CONNECTION DETAIL

(PVC PIPE ONLY)
NO SCALE

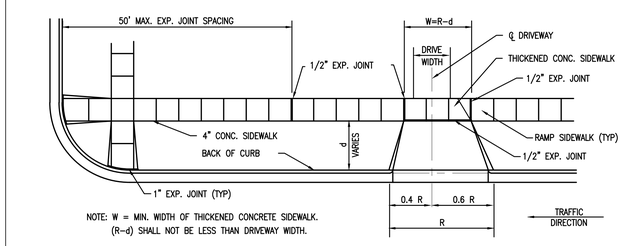

NOTE: W = MIN. WIDTH OF THICKENED CONCRETE SIDEWALK.
(R-d) SHALL NOT BE LESS THAN DRIVEWAY WIDTH.

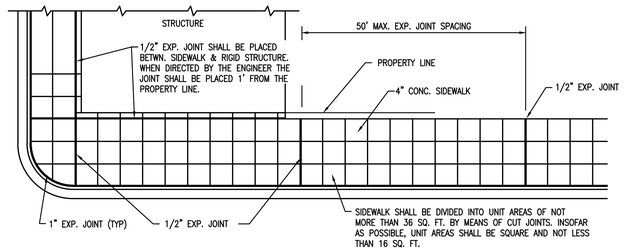

LOCATION OF JOINTS IN CONCRETE SIDEWALK

NOTES:
SIDEWALK TRANSVERSE SLOPE MAY VARY FROM ZERO TO 1/2" PER FT. TO MEET SIDE CONDITIONS. WHEN TRANSVERSE SLOPE IS LESS THAN 1/4" PER FT. LONGITUDINAL DRAINAGE MUST BE PROVIDED. IN SETTING GRADES FOR COMMERCIAL DRIVES THE TYPES OF THE USING VEHICLES SHOULD BE CONSIDERED

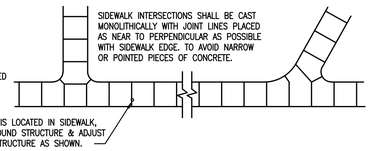

TYPICAL SIDEWALK JOINT LAYOUT

SIDEWALK DETAILS

SCALE: NOT TO SCALE

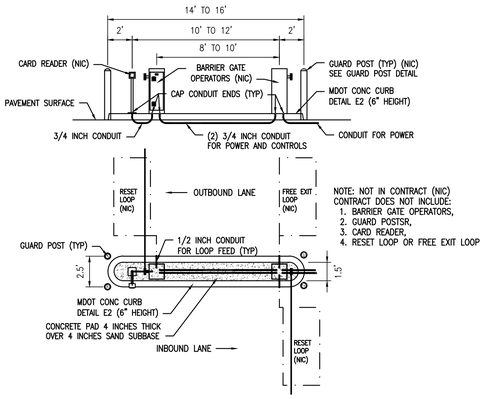

NOTE: NOT IN CONTRACT (NIC)
CONTRACT DOES NOT INCLUDE:
1. BARRIER GATE OPERATORS,
2. GUARD POSTSR,
3. CARD READER,
4. RESET LOOP OR FREE EXIT LOOP

TYPICAL PARKING LOT BARRIER GATE LAYOUT

NO SCALE

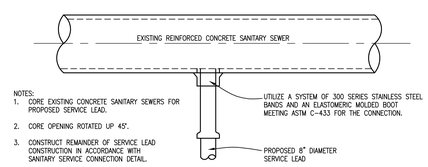

NOTES:
1. CORE EXISTING CONCRETE SANITARY SEWERS FOR PROPOSED SERVICE LEAD.
2. CORE OPENING ROTATED UP 45°.
3. CONSTRUCT REMAINDER OF SERVICE LEAD CONSTRUCTION IN ACCORDANCE WITH SANITARY SERVICE CONNECTION DETAIL.

SANITARY SEWER LEAD CONNECTION TO EXISTING REINFORCED CONCRETE PIPE SEWER

NO SCALE

APPROVED DATE: 2-01-12
DETAIL: 402-2B

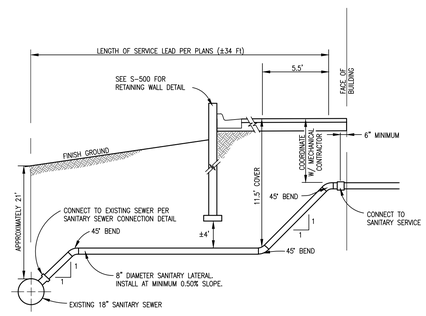

SANITARY SERVICE LATERAL DETAIL

NO SCALE

Revisions:	Date
1	
2	
3	
4	
5	

CONSULTANTS:
725 Prudden Street
Lansing, MI 48906 - 517.371.1200
123 West Main Street, Suite 200
Gaylord, MI 49735 - 989.732.8131
648 Monroe Avenue NW, Suite 210
Grand Rapids, MI 49503 - 616.454.9414
1211 Ludington Street
Escanaba,MI 49829 - 906.233.9360
c2ae
WWW.C2AE.COM

Department of Veterans Affairs
John D. Dingell VA Medical Center
4646 John R Street
Detroit, MI 48201

Property of the United States Government
For Official Use Only
Do not remove this notice
Properly Destroy documents when no longer needed

Drawing Title: GENERAL DETAILS	Project Title: EXPAND EMERGENCY DEPARTMENT	Date: 28 MARCH 2014	Office of Facilities Management
		Project Number: 11-0049	
File Name: 110049_VADT_ExpandED.rvt	Approved: Division Chief	Building Number / Checked: RFM / Drawn: MSA	Drawing Number: C-500
File Location: M:\2011\110049_VADT_ExpandED\Drawings\	Approved: Service Director	Location: 4646 JOHN R. STREET DETROIT, MI 48201	Department of Veterans Affairs

100% FOR BIDS

VA FORM 08-6231, OCT 1978