DEPARTMENT OF VETERANS AFFAIRS
MARYLAND HEALTH CARE SYSTEM

PERRY POINT, MARYLAND

MRI SITE PREP

JUNE 30, 2014

PERRY POINT DVAMC
LOCATION PLAN

INDEX OF DRAWINGS

DWG NO.	DWG	DRAWING NAME
G101	1	COVER SHEET
C101	2	SITE & EROSION AND SEDIMENT CONTROL PLAN
A101	3	DEMOLITION & NEW WORK – PLANS
A102	4	FLOOR, REFLECTED CEILING AND ROOF PLANS
A201	5	ELEVATIONS & DETAILS
A301	6	ELEVATIONS & SECTION
A601	7	DOOR, FINISH SCHEDULES & DETAILS
S101	8	STRUCTURAL PLANS AND GENERAL NOTES.
S201	9	STRUCTURAL SECTIONS AND DETAILS.
M001	10	MECHANICAL LEGEND, ABBREVIATIONS, & GENERAL NOTES
M101	11	PART GROUND FLOOR PLAN – MECHANICAL – DEMOLITION
M201	12	PART GROUND FLOOR PLAN – MECHANICAL – NEW WORK
M202	13	PART ROOF PLAN – MECHANICAL – NEW WORK
M601	14	AUTOMATIC TEMPERATURE CONTROLS
M701	15	MECHANICAL DETAILS
M702	16	MECHANICAL DETAILS
M801	17	MECHANICAL SCHEDULES
E001	18	ELECTRICAL LEGEND, ABBREVIATIONS AND SCHEDULE
E101	19	PART GROUND FLOOR PLAN–ELECTRICAL–DEMOLITION
E201	20	PART GROUND FLOOR PLAN–POWER–NEW WORK
E202	21	PART GROUND FLOOR PLAN–LIGHTING–NEW WORK
E203	22	PART ROOF PLAN–ELECTRICAL–NEW WORK
E301	23	PART POWER DISTRIBUTION SYSTEM ONE–LINE DIAGRAM
E401	24	ELECTRICAL PANEL SCHEDULES
P100	25	PLUMBING LEGEND, GENERAL NOTES, & SCHEDULES
P101	26	PART GROUND FLOOR PLAN – PLUMBING – DEMOLITION
P201	27	PART GROUND FLOOR PLAN – PLUMBING – NEW WORK
P401	28	PLUMBING RISER DIAGRAMS
P501	29	PLUMBING DETAILS

NOTE: HITACHI MEDICAL SYSTEMS AMERICA, INC. (HMSA) DOCUMENTS ARE ATTACHED AND INCLUDED FOR REFERENCE AND RF SHIELDING PURPOSES. THE CONTRACTOR IS REQUIRED TO PROVIDE RF SHIELDING AS REQUIRED AND SPECIFIED IN THE HMSA DOCUMENTS.

Additions:	Date:
Revisions:	
1 UPDATE SHIELDING NOTES AND MISC. REVISIONS	7–18–14

Consultants

BURDETTE KOEHLER MURPHY & ASSOCIATES, INC.
MECHANICAL / ELECTRICAL CONSULTING ENGINEERING
1416 CLARKVIEW ROAD
BALTIMORE, MARYLAND 21209
410.323.0600 – FAX 410.377.2543

RICKERT ENGINEERING, Inc.
STRUCTURAL ENGINEERING
8813 WALTHAM WOODS ROAD, SUITE 301
BALTIMORE, MARYLAND 21234
410.663.5110 – FAX 410.663.5114

BUILDING COST CONSULTANTS
COST ESTIMATING
12917 – 30TH AVENUE
PLATTSMOUTH, NEBRASKA 68048
402.298.8260 – FAX 402.298.8290

Seal:

ARCHITECTURE
PLANNING
ENGINEERING

POLT DESIGN GROUP
2215 CONOWINGO RD.
Bel Air, Maryland 21015–1436
410.803.2141
fax 410.836.6611
www.polt–design.com

Drawing Scale:

Drawing Start Date:

Drawing Finish Date:

Drawing Approved:

Drawing Title: COVER SHEET

Approved: Associate Director for Operations:

Approved: Chief, Facilites Engineer:

Approved: Director, Medical Center:

Project Title: MRI SITE PREPERATION

Building No: 361

Checked:

Drawn:

Location: VAMHCS MEDICAL CENTER PERRY POINT, MD

Date: 6/30/14

Project No: 512–09–315

DRAWING NO: G101

Dwg. 1 Of 29

DEPARTMENT OF VETERANS AFFAIRS

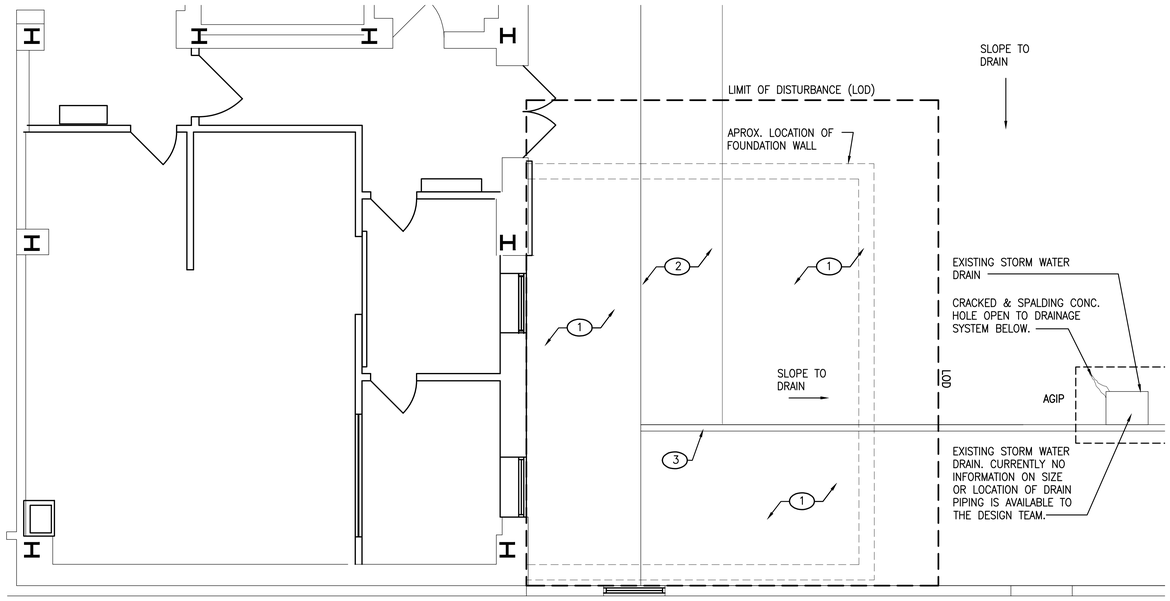

TRUE NORTH

PLAN NORTH

1 / C101 CIVIL DEMOLITION – PLAN
SCALE:1/4" = 1'-0"

DEMOLITION NOTES

1. SAW CUT & REMOVE EXISTING CONCRETE
2. SAW CUT AND REMOVE EXISTING ASPHALT & ANY CONCRETE BELOW.
3. SAW CUT & REMOVE CONCRETE CURB

AREA OF DISTURBANCE (AOD) = 1,077 SF
NO EROSION AND SEDIMENT CONTROLS REQUIRED PER SECTION 3.2.B OF THE MARYLAND MODEL EROSION AND SEDIMENT CONTROL ORDINANCE – 2012. MDE APPROVAL IS NEEDED IF AOD IS 5,000sf OR MORE.

NOTE
CONTRACTOR TO USE EXTREME CAUTION WHEN EXCAVATING. UNKNOWN AND UNMARKED UTILITIES ARE COMMON AT PERRY POINT VAMC.

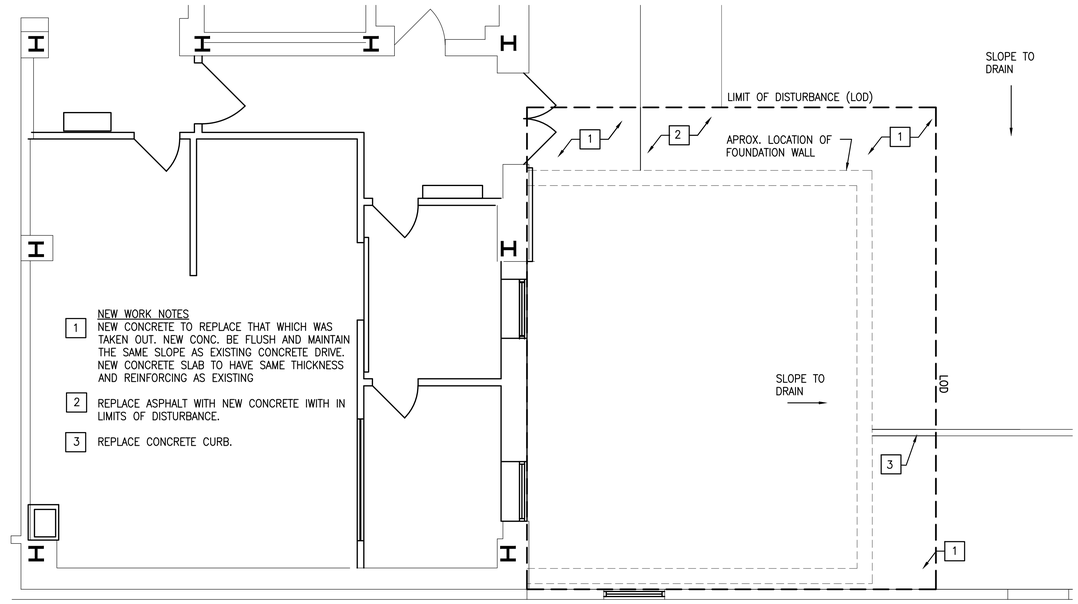

NEW WORK NOTES

1. NEW CONCRETE TO REPLACE THAT WHICH WAS TAKEN OUT. NEW CONC. BE FLUSH AND MAINTAIN THE SAME SLOPE AS EXISTING CONCRETE DRIVE. NEW CONCRETE SLAB TO HAVE SAME THICKNESS AND REINFORCING AS EXISTING
2. REPLACE ASPHALT WITH NEW CONCRETE IWITH IN LIMITS OF DISTURBANCE.
3. REPLACE CONCRETE CURB.

TRUE NORTH

PLAN NORTH

2 / C101 CIVIL NEW WORK – PLAN
SCALE:1/4" = 1'-0"

GENERAL NOTES

1. THE CONTRACTOR SHALL NOTIFY "MISS UTILITY" AT (800) 257–7777, AND THE "VETERANS ADMINISTRATION" PROJECT ENGINEER (410) 642–2411, EXT. 5125 AT LEAST (7) DAYS PRIOR TO BEGINNING OF CONSTRUCTION. VETERANS ADMINISTRATION'S (VA) OWNED UTILITIES SHALL BE LOCATED AND MARKED BY "UNDERGROUND PROTECTION, INC" (410) 569–8989 UNDER THE DIRECTION OF THE CONTRACTOR. COST FOR LOCATING AND MARKING VA OWNED UTILITIES SHALL BE INCLUDED IN THE CONTRACTORS BID PRICE(S).
2. ALL CONSTRUCTION SHALL BE IN ACCORDANCE WITH THE STATE OCCUPATIONAL AND SAFETY LAW.
3. HORIZONTAL AND VERTICAL CONTROLS ARE BASED UPON AN ASSUMED COORDINATE SYSTEM AND DATUM WITH BOTH TIED TO THE VA MEDICAL CENTER MONUMENT COORDINATE SYSTEM AND DATUM. ELEVATIONS ARE REFERRED TO MEAN SEA LEVEL DATUM AS ESTABLISHED BY U.S.C. & G.S. B.M. "P–19" LOCATED ON THE FIRST STEPDOWN OF WEST END OF NORTH ABUTMENT OF PENNA R.R. BRIDGE OVER ROAD TO PERRY POINT. COORDINATES ARE PLANE COORDINATES AS ESTABLISHED BY U.S.C.&G.S. FOR THE STATE OF MARYLAND ARE BASED UPON TRIANGULATION STATION "PERRY".
"PERRY" N 625,427.03 E 1,068,770.55
4. CONTRACTOR SHALL PAY FOR ALL STAKING, RESTAKING, AND CUT SHEETS REQUIRED FOR THE PROPOSED CONSTRUCTION. ALL STAKE–OUT MUST BE DONE BY A REGISTERED LAND SURVEYOR OR PROFESSIONAL ENGINEER.
5. EXISTING UTILITIES ARE SHOWN FOR THE CONVENIENCE OF THE CONTRACTOR, BUT THE COMPLETION OR ACCURACY OF THE SAME IS IN NO WAY GUARANTEED. THE CONTRACTOR SHALL DETERMINE THE LOCATION AND ELEVATION OF EXISTING UTILITIES AT HIS OWN EXPENSE. THE CONTRACTOR SHALL BE RESPONSIBLE FOR ALL DAMAGES TO EXISTING UTILITIES DURING CONSTRUCTION. EXISTING UTILITIES ARE BASED ON SURVEY DRAWINGS PROVIDED BY VA'S ADMINISTRATION PERSONNEL.
6. ROADSIDE DRAINAGE DITCHES, CULVERTS, AND UNDERDRAINS, WHICH ARE DAMAGED OR DESTROYED BY CONSTRUCTION SHALL BE RESTORED TO A CONDITION AT LEAST EQUAL TO THAT PRIOR TO THE START OF CONSTRUCTION AT THE CONTRACTOR'S EXPENSE.
7. THE CONTRACTOR SHALL PROVIDE ALL NECESSARY SIGNING AND CONTROLS FOR PEDESTRIAN AND VEHICULAR TRAFFIC IN WORK AREAS FOR SAFETY AND TO MINIMIZE INTERRUPTION OF NORMAL ACTIVITY AS DIRECTED BY THE ENGINEER. THE CONTRACTOR SHALL REFER TO THE PROJECT SPECIFICATIONS AS WELL AS THE MARYLAND STATE HIGHWAY ADMINISTRATION SPECIFICATION AND STANDARD DETAILS, WHERE APPLICABLE, FOR ADDITIONAL REQUIREMENTS.
8. THE CONTRACTOR SHALL BE RESPONSIBLE FOR THE MAINTENANCE OF TRAFFIC AND TRAFFIC CONTROL DURING CONSTRUCTION.
9. THE CONTRACTOR MUST OBTAIN WRITTEN APPROVAL FROM THE CONTRACTING OFFICER REPRESENTATIVE (COR) PRIOR TO PERFORMING ANY WORK ON SATURDAYS, SUNDAYS, OR FEDERAL HOLIDAYS. ALL PARKING AREAS MUST BE PAVED ON WEEKEND HOURS.
10. CONTRACTOR SHALL COORDINATE WITH COR EXACT LIMITS OF SIDEWALK, CURB AND GUTTER TO BE REPLACED PRIOR TO START OF WORK. QUANTITIES SHALL BE AGREED TO PRIOR TO START OF WORK.
11. THE CONTRACTOR SHALL MATCH ADJACENT SIDEWALKS OR CURB & GUTTER FOR LINE AND GRADE. CONTRACTOR SHALL WARP PAVING AS NECESSARY TO ENSURE POSITIVE DRAINAGE.
12. THE CONTRACTOR SHALL ADJUST ALL NEW AND EXISTING UTILITY BOXES, MANHOLES, ETC., WHICH ARE TO REMAIN TO CONFORM TO FINAL GRADE.
13. THE CONTRACTOR SHALL RESTORE ALL EXISTING FEATURES AFFECTED BY THE CONSTRUCTION TO MATCH ORIGINAL CONDITIONS, INCLUDING, BUT NOT LIMITED TO: CURBS, SIDEWALKS, PAVING, STRUCTURES, TURF, SIGNS, GRAVEL, PARKING, PARKING BLOCKS, RAILINGS, ETC. CONTRACTOR SHALL RESTORE ALL AREAS DISTURBED BY THEIR WORK ACTIVITY. THIS INCLUDES REGRADING OF GROUND ADJACENT TO WORK AREAS WHERE TIRE RUTS HAVE BEEN GENERATED. SEEDING AND SOIL STABILIZATION WILL BE REQUIRED IN REGRADED AREAS.
14. ALL INLETS AND MANHOLES WILL BE BACKFILLED WITH NO. 57 AGGREGATE FOR A WIDTH OF 2.0 FEET OUTSIDE THE PERIMETER OF THE INLETS.
15. ANY DAMAGE TO EXISTING VA PROPERTY FROM CONTRACTOR ACTIVITIES SHALL BE RESTORED BY CONTRACTOR AT NO ADDITIONAL COST TO THE VA. THIS INCLUDES (BUT IS NOT LIMITED TO): REPAIRING CHIPPED CURB & GUTTER OR OTHER CONCRETE FEATURES CRACKED BY CONTRACTOR EQUIPMENT; FILLING IN RUTS IN ADJACENT GRASSY AREAS CAUSED BY CONTRACTOR EQUIPMENT OR VEHICLES; REPLANTING GRASS DAMAGED BY OVERSPRAY OR VEHICULAR TRAFFIC; REPAINTING ANY FEATURES AFFECTED BY OVERSPRAY OF BITUMINOUS APPLICATIONS; ETC.

DETAIL E-3 SUPER SILT FENCE

STANDARD SYMBOL: SSF

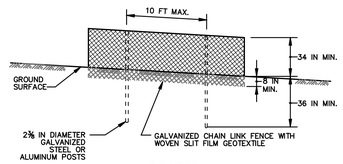

ELEVATION

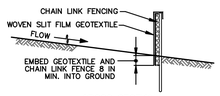

CROSS SECTION

CONSTRUCTION SPECIFICATIONS

1. INSTALL 2⅜ INCH DIAMETER GALVANIZED STEEL POSTS OF 0.095 INCH WALL THICKNESS AND SIX FOOT LENGTH SPACED NO FURTHER THAN 10 FEET APART. DRIVE THE POSTS A MINIMUM OF 36 INCHES INTO THE GROUND.
2. FASTEN 9 GAUGE OR HEAVIER GALVANIZED CHAIN LINK FENCE (2⅜ INCH MAXIMUM OPENING) 42 INCHES IN HEIGHT SECURELY TO THE FENCE POSTS WITH WIRE TIES OR HUG RINGS.
3. FASTEN WOVEN SLIT FILM GEOTEXTILE AS SPECIFIED IN SECTION H–1 MATERIALS, SECURELY TO THE UPSLOPE SIDE OF CHAIN LINK FENCE WITH TIES SPACED EVERY 24 INCHES AT THE TOP AND MID SECTION. EMBED GEOTEXTILE AND CHAIN LINK FENCE A MINIMUM OF 8 INCHES INTO THE GROUND.
4. WHERE ENDS OF THE GEOTEXTILE COME TOGETHER, THE ENDS SHALL BE OVERLAPPED BY 6 INCHES, FOLDED, AND STAPLED TO PREVENT SEDIMENT BY PASS.
5. EXTEND BOTH ENDS OF THE SUPER SILT FENCE A MINIMUM OF FIVE HORIZONTAL FEET UPSLOPE AT 45 DEGREES TO THE MAIN FENCE ALIGNMENT TO PREVENT RUNOFF FROM GOING AROUND THE ENDS OF THE SUPER SILT FENCE.
6. PROVIDE MANUFACTURER CERTIFICATION TO THE INSPECTION/ENFORCEMENT AUTHORITY SHOWING THAT GEOTEXTILE USED MEETS THE REQUIREMENTS IN SECTION H–1 MATERIALS.
7. REMOVE ACCUMULATED SEDIMENT AND DEBRIS WHEN BULGES DEVELOP IN FENCE OR WHEN SEDIMENT REACHES 25% OF FENCE HEIGHT. REPLACE GEOTEXTILE IF TORN. IF UNDERMINING OCCURS, REINSTALL CHAIN LINK FENCING AND GEOTEXTILE.

MARYLAND STANDARDS AND SPECIFICATIONS FOR SOIL EROSION AND SEDIMENT CONTROL

U.S. DEPARTMENT OF AGRICULTURE NATURAL RESOURCES CONSERVATION SERVICE	2011	MARYLAND DEPARTMENT OF ENVIRONMENT WATER MANAGEMENT ADMINISTRATION

DETAIL E-9-2 AT-GRADE INLET PROTECTION

STANDARD SYMBOL: AGIP

MAXIMUM DRAINAGE AREA = 1 ACRE

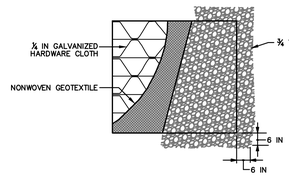

PLAN / CUT AWAY VIEW

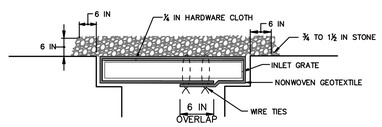

CROSS SECTION

CONSTRUCTION SPECIFICATIONS

1. USE NONWOVEN GEOTEXTILE AS SPECIFIED IN SECTION H–1 MATERIALS.
2. LIFT GRATE AND WRAP WITH NONWOVEN GEOTEXTILE TO COMPLETELY COVER ALL OPENINGS. SECURE WITH WIRE TIES AND SET GRATE BACK IN PLACE.
3. PLACE CLEAN ¾ TO 1½ INCH STONE OR EQUIVALENT RECYCLED CONCRETE 6 INCHES THICK ON THE GRATE.
4. STORM DRAIN INLET PROTECTION REQUIRES FREQUENT MAINTENANCE. REMOVE ACCUMULATED SEDIMENT AFTER EACH RAIN EVENT TO MAINTAIN FUNCTION AND AVOID PREMATURE CLOGGING. IF INLET PROTECTION DOES NOT COMPLETELY DRAIN WITHIN 24 HOURS AFTER A STORM EVENT, IT IS CLOGGED. WHEN THIS OCCURS, REMOVE ACCUMULATED SEDIMENT AND CLEAN, OR REPLACE GEOTEXTILE AND STONE.

MARYLAND STANDARDS AND SPECIFICATIONS FOR SOIL EROSION AND SEDIMENT CONTROL

U.S. DEPARTMENT OF AGRICULTURE NATURAL RESOURCES CONSERVATION SERVICE	2011	MARYLAND DEPARTMENT OF ENVIRONMENT WATER MANAGEMENT ADMINISTRATION

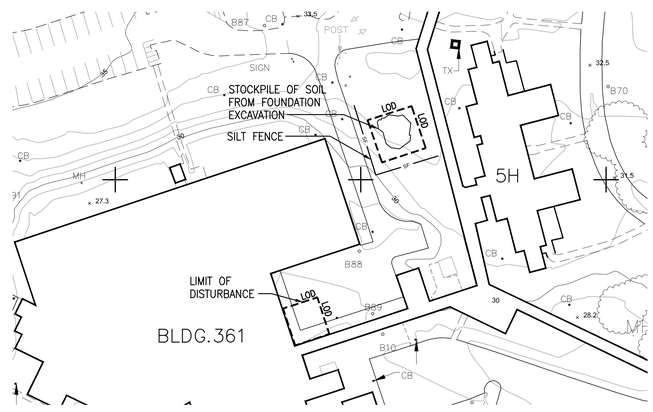

3 / C101 EROSION & SEDIMENT CONTROL PLAN
SCALE:

KEYPLAN

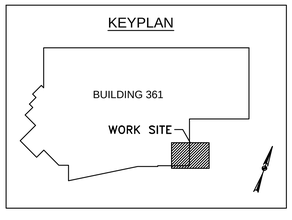

Additions:	Date:
Revisions:	
1 UPDATE SHIELDING NOTES AND MISC. REVISIONS	7–18–14

Consultants

BURDETTE KOEHLER MURPHY & ASSOCIATES, INC.
MECHANICAL / ELECTRICAL CONSULTING ENGINEERING
1416 CLARKVIEW ROAD
BALTIMORE, MARYLAND 21209
410.323.0600 – FAX 410.377.2543

RICKERT ENGINEERING, Inc.
STRUCTURAL ENGINEERING
8813 WALTHAM WOODS ROAD, SUITE 301
BALTIMORE, MARYLAND 21234
410.663.5110 – FAX 410.663.5114

BUILDING COST CONSULTANTS
COST ESTIMATING
12917 – 30TH AVENUE
PLATTSMOUTH, NEBRASKA 68048
402.298.8260 – FAX 402.298.8290

Seal:

POLT DESIGN GROUP
ARCHITECTURE PLANNING ENGINEERING
2215 CONOWINGO RD. 410.803.2141
Bel Air, Maryland 21015–1436 fax 410.836.6611
www.polt–design.com

Drawing Scale:
Drawing Start Date:
Drawing Finish Date:
Drawing Approved:

Drawing Title: SITE AND EROSION & SEDIMENT CONTROL PLAN

Approved: Associate Director for Operations:
Approved: Chief, Facilites Engineer:
Approved: Director, Medical Center:

Project Title: MRI SITE PREPERATION

Building No: 361
Checked:
Drawn:
Location: VAMHCS MEDICAL CENTER PERRY POINT, MD

Date: 6/30/14
Project No: 512–09–315
DRAWING NO: C101
Dwg. 2 Of 29

DEPARTMENT OF VETERANS AFFAIRS

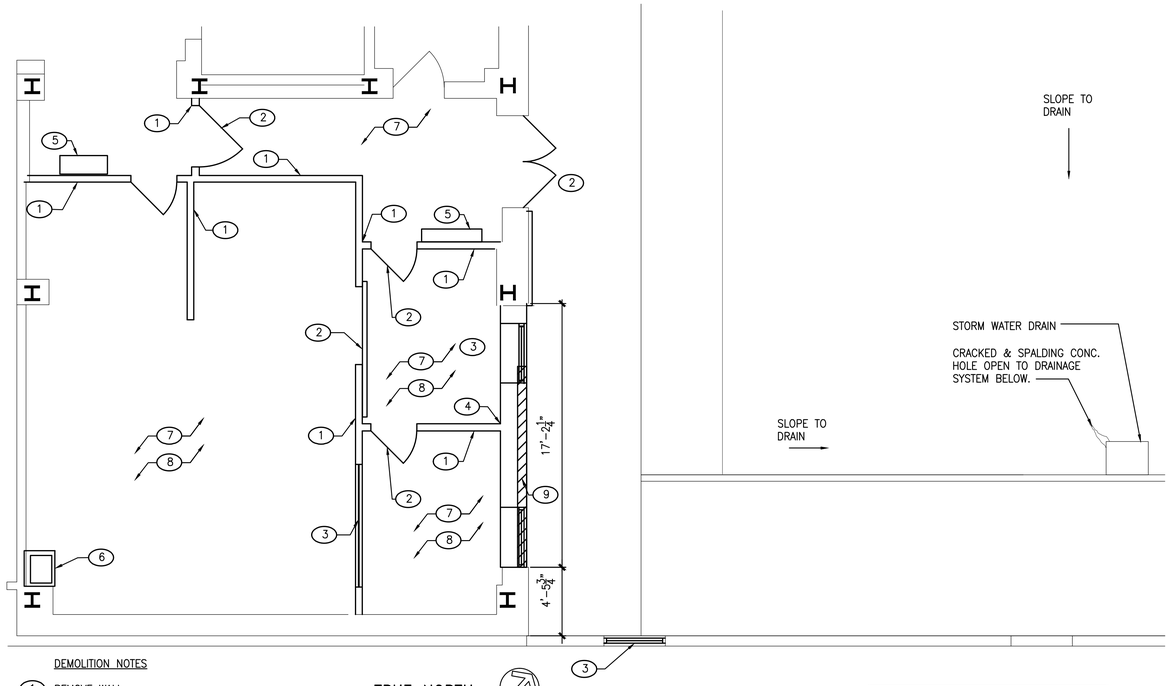

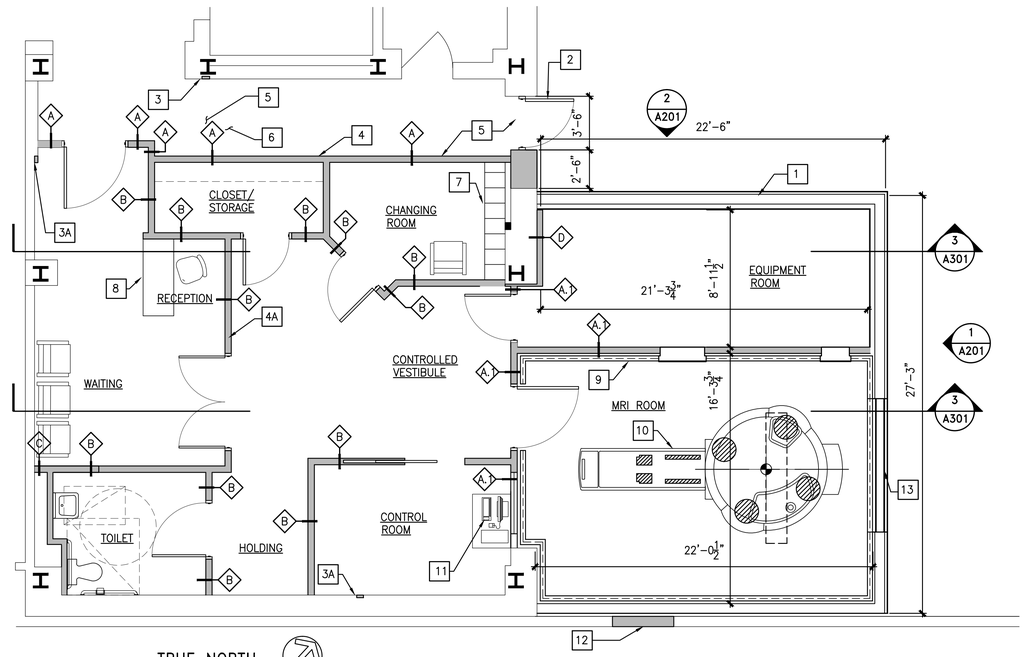

DEMOLITION NOTES

1. REMOVE WALL
2. REMOVE DOOR, FRAME AND ANY OTHER HARDWARE
3. REMOVE WINDOW, FRAME & HARDWARE.
4. REMOVE PORTION OF EXTERIOR WALL BRACE AS NECESSARY TO MAINTAIN STRUCTURAL INTEGRITY.
5. REMOVE HEATER CAP ANY STEAM LINES – SEE MECHANICAL DEMOLITION DRAWINGS.
6. REMOVE SINK & CABINETRY TEMPORARLY CAP WATER SUPPLY & DRAIN LINES – SEE PLUMBING DEMOLITION DRAWINGS.
7. REMOVE ALL EXIST. FLOORING IN ROOM.
8. REMOVE ALL EXIST CEILING TILES, GRID & LIGHT FIXTURES IN ROOM
9. REMOVE PORTION OF CONC. SLAB TO A DEPTH OF 1½" TO ACCOMMODATE NEW RF FLOORING – SEE DETAIL 11/A301 FOR DIMMENSIONS

TRUE NORTH

PLAN NORTH

1 A101 DEMOLITION – PLAN
SCALE:1/4" = 1'-0"

NOTES:
CONTRACTOR TO VERIFY ALL EXISTING CONDITIONS AND DIMENSIONS.

CONTRACTOR TO PROTECT ALL EXISTING FINISHES DURING DEMOLITION AND CONSTRUCTION. CONTRACTOR TO REPAIR ANY DAMAGE TO EXISTING FINISHES. ALL NEW AND REPLACED FINISHES ARE TO MATCH EXISTING.

CONTRACTOR MAY TEMPORARILY REMOVE ANY HAND RAILS OR OTHER FINISHES WITH VA APPROVAL. ALL REMOVED HANDRAILS AND FINISHES ARE TO BE PUT BACK IN THEIR ORIGINAL POSITION, CLEANED & RESTORED TO THEIR PRE-CONSTRUCTION CONDITION.

LEGEND

- EXISTING WALLS TO REMAIN
- EXISTING WALLS TO BE REMOVED
- NEW WALLS
- EXISTING DOORS TO REMAIN
- EXISTING DOORS, FRAMES & ETC. TO BE REMOVED
- NEW DOOR

ADDITION AREA:	623 SF
RENOVATION AREA:	929 SF
TOTAL AREA:	1552 SF

TRUE NORTH

PLAN NORTH

2 A101 NEW WORK – PLAN
SCALE:1/4" = 1'-0"

NOTE:
ALL EXISTING WALLS THAT REMAIN ARE TO BE PATCHED & PAINTED TO MATCH SUITE PAINT SCHEME.

RF SHIELDING SUPPLIER TO REVIEW HITACHI MEDICAL SYSTEMS (HMSA) DRAWINGS BEFORE PREPARING SHOPDRAWINGS . RF AND MAGNETIC SHIELDING CONTRACTORS TO PAY CLOSE ATTENTION TO MEP DRAWINGS AND PROVIDE ALL NECESSARY COMPONENTS FOR A COMPLETE SHIELDING SYSTEM.

NEW WORK ITEMS

1. NEW ADDITION TO HOUSE MRI SCANNING ROOM, CONTROL ROOM & EQUIPMENT ROOM
2. NEW INSULATED EXTERIOR DOOR W/ PANIC HARDWARE.
3. PARCH WALL MAKE FLUSH WITH EXISTING WALL. PAINT TO MATCH EXISTING WALL COLOR.
3A. PARCH WALL MAKE FLUSH WITH EXISTING.
4. NEW FIRE RATED WALL
4A. NEW INTERIOR WALLS TYP.
5. PATCH FLOOR TO MATCH EXISTING.
6. PATCH CEILING TO MATCH EXISTING.
7. NEW LOCKERS (N.I.C.)
8. NEW RECEPTION DESK
9. RF SHIELDING – SEE HMSA STANDARD DRAWINGS
10. NEW MRI
11. NEW MRI WORK STATIONS – SEE HMSA STANDARD DRAWINGS
12. FILL WINDOW OPENING AND MAKE WEATHER TIGHT
13. ACCESS PANEL

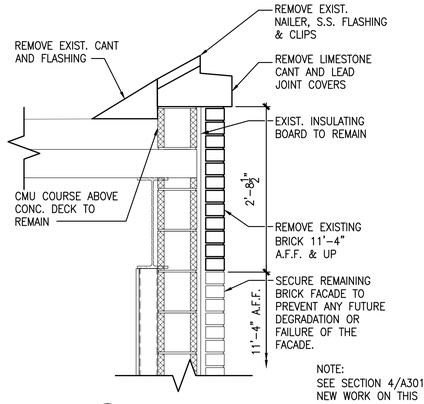

NOTE:
SEE SECTION 4/A301 FOR NEW WORK ON THIS WALL.

3 A101 DEMOLITION – DETAIL
SCALE: 1"=1'-0"

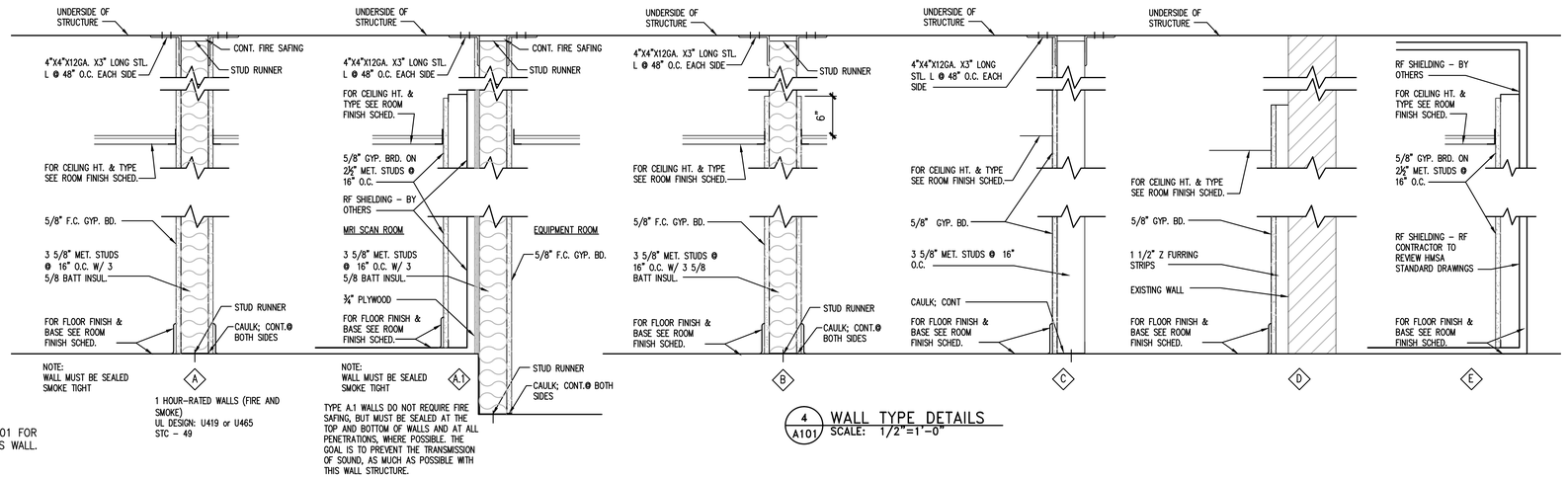

4 A101 WALL TYPE DETAILS
SCALE: 1/2"=1'-0"

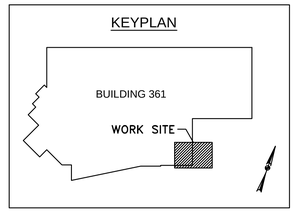

Revisions:	Date:
1 UPDATE SHIELDING NOTES AND MISC. REVISIONS	7-18-14

Consultants

BURDETTE KOEHLER MURPHY & ASSOCIATES, INC.
MECHANICAL / ELECTRICAL CONSULTING ENGINEERING
1416 CLARKVIEW ROAD
BALTIMORE, MARYLAND 21209
410.323.0600 – FAX 410.377.2543

RICKERT ENGINEERING, Inc.
STRUCTURAL ENGINEERING
8813 WALTHAM WOODS ROAD, SUITE 301
BALTIMORE, MARYLAND 21234
410.663.5110 – FAX 410.663.5114

BUILDING COST CONSULTANTS
COST ESTIMATING
12917 – 30TH AVENUE
PLATTSMOUTH, NEBRASKA 68048
402.298.8260 – FAX 402.298.8290

Seal:

ARCHITECTURE PLANNING ENGINEERING
POLT DESIGN GROUP
2215 CONOWINGO RD.
Bel Air, Maryland 21015-1436
410.803.2141
fax 410.836.6611
www.polt-design.com

Drawing Scale:
Drawing Start Date:
Drawing Finish Date:
Drawing Approved:

Drawing Title: DEMOLITION & NEW WORK PLANS

Approved: Associate Director for Operations:
Approved: Chief, Facilites Engineer:
Approved: Director, Medical Center:

Project Title: MRI SITE PREPERATION

Building No: 361
Checked:
Drawn:
Location: VAMHCS MEDICAL CENTER PERRY POINT, MD

Date: 6/30/14
Project No: 512-09-315
DRAWING NO: A101
Dwg. 3 Of 29

DEPARTMENT OF VETERANS AFFAIRS

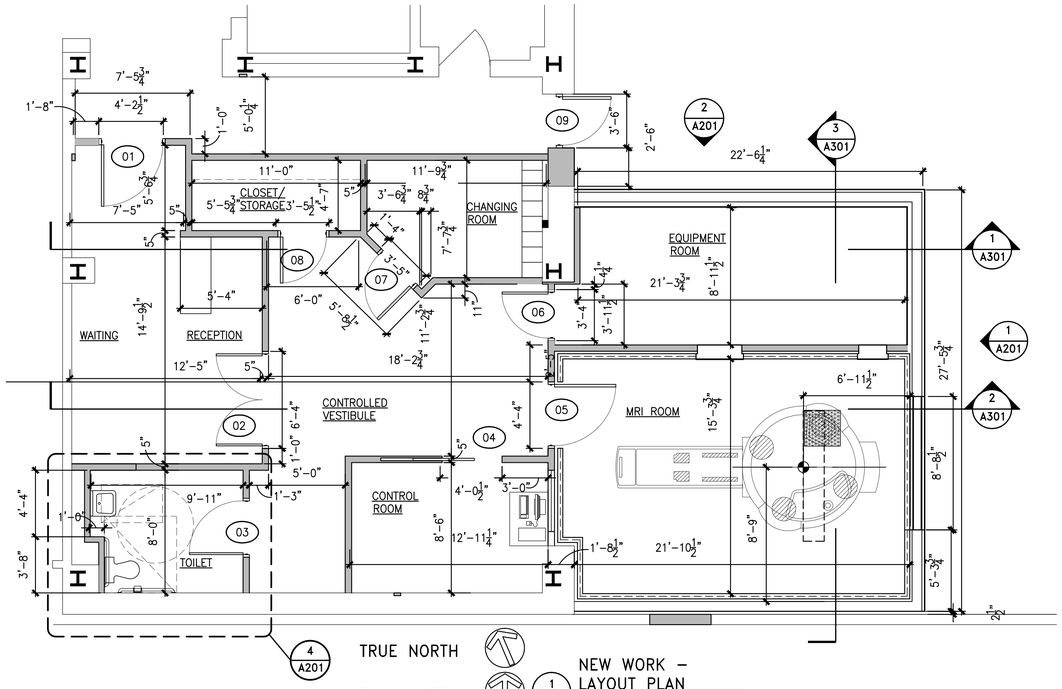

1 A102 NEW WORK – LAYOUT PLAN
SCALE:1/4" = 1'-0"

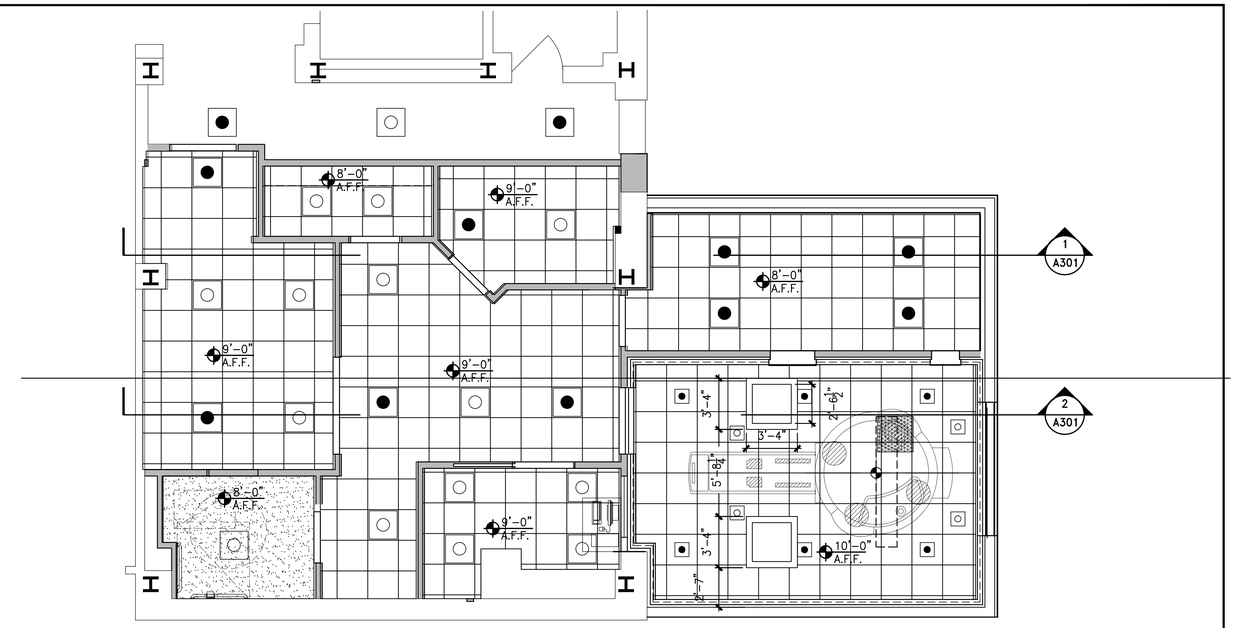

2 A102 NEW REFLECTED CEILING PLAN
SCALE:1/4" = 1'-0"

ADDITION AREA:	623 SF
RENOVATION AREA:	929 SF
TOTAL AREA:	1552 SF

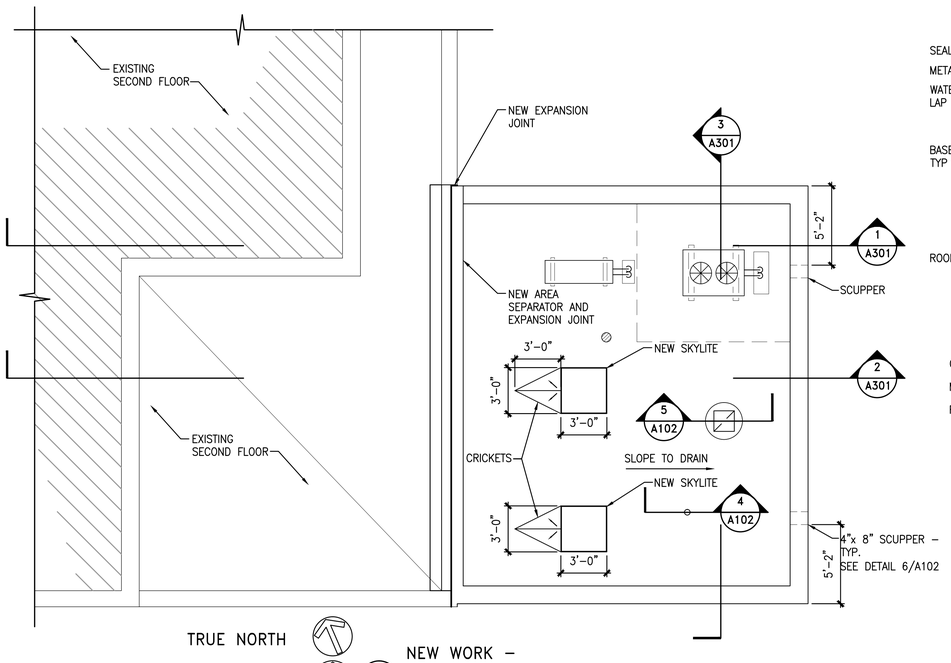

3 A102 NEW WORK – LAYOUT PLAN
SCALE:1/4" = 1'-0"

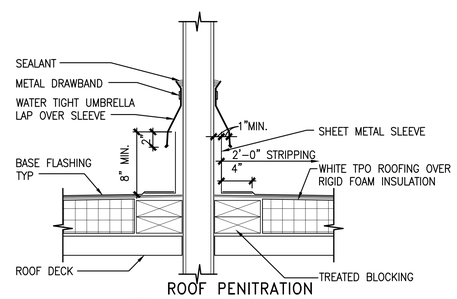

ROOF PENITRATION
4 A102 PIPE – DETAIL
SCALE: 1 1/2" = 1'-0"

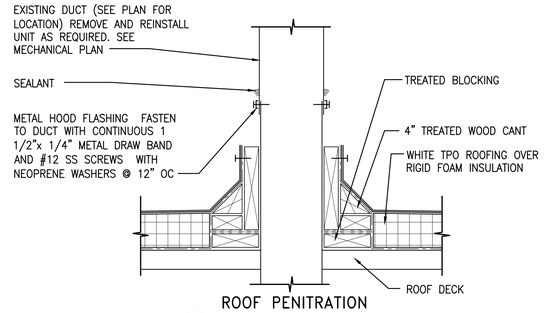

ROOF PENITRATION
5 A102 DUCT – DETAIL
SCALE: 1 1/2" = 1'-0"

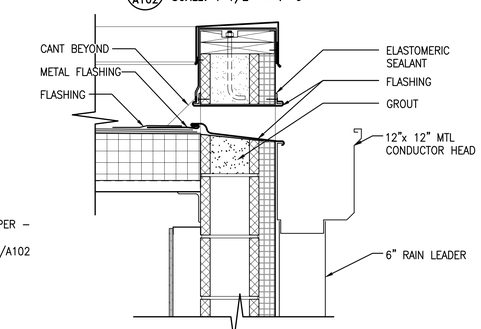

ROOF PENITRATION
6 A102 PIPE – DETAIL
SCALE: 1 1/2" = 1'-0"

KEYPLAN

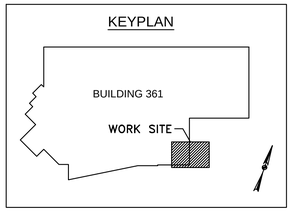

Additions:	Date:
Revisions:	
1 UPDATE SHIELDING NOTES AND MISC. REVISIONS	7–18–14

Consultants

BURDETTE KOEHLER MURPHY & ASSOCIATES, INC.
MECHANICAL / ELECTRICAL CONSULTING ENGINEERING
1416 CLARKVIEW ROAD
BALTIMORE, MARYLAND 21209
410.323.0600 – FAX 410.377.2543

RICKERT ENGINEERING, Inc.
STRUCTURAL ENGINEERING
8813 WALTHAM WOODS ROAD, SUITE 301
BALTIMORE, MARYLAND 21234
410.663.5110 – FAX 410.663.5114

BUILDING COST CONSULTANTS
COST ESTIMATING
12917 – 307H AVENUE
PLATTSMOUTH, NEBRASKA 68048
402.298.8260 – FAX 402.298.8290

Seal:

ARCHITECTURE
PLANNING
ENGINEERING
POLT DESIGN GROUP
2215 CONOWINGO RD.
Bel Air, Maryland 21015–1436
410.803.2141
fax 410.836.6611
www.polt–design.com

Drawing Scale:
Drawing Start Date:
Drawing Finish Date:
Drawing Approved:

Drawing Title: FLOOR AND REFLECTED CEILING PLANS

Approved: Associate Director for Operations:
Approved: Chief, Facilites Engineer:
Approved: Director, Medical Center:

Project Title: MRI SITE PREPERATION

Building No: 361
Checked:
Drawn:
Location: VAMHCS MEDICAL CENTER PERRY POINT, MD

Date: 6/30/14
Project No: 512–09–315
DRAWING NO: A102
Dwg. 1 Of 29

DEPARTMENT OF VETERANS AFFAIRS

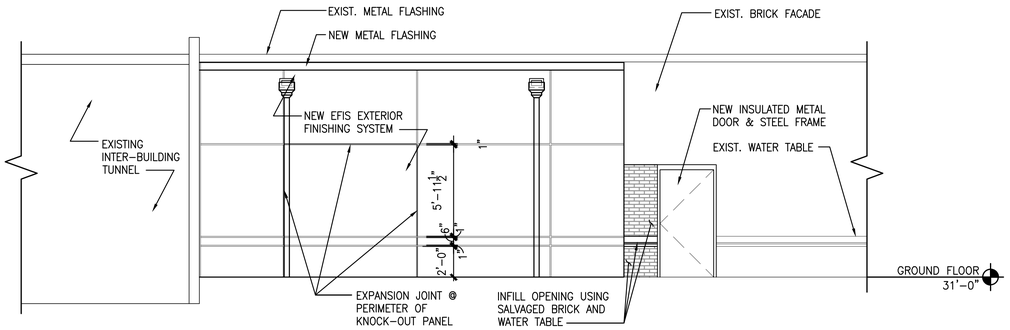

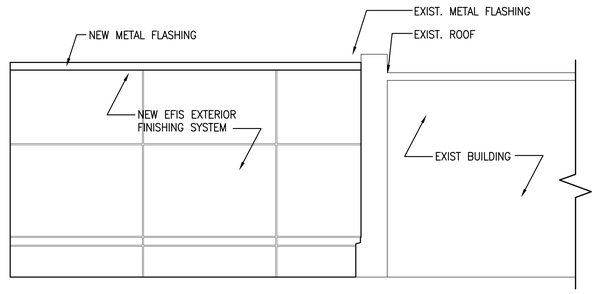

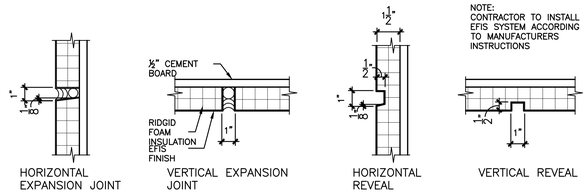

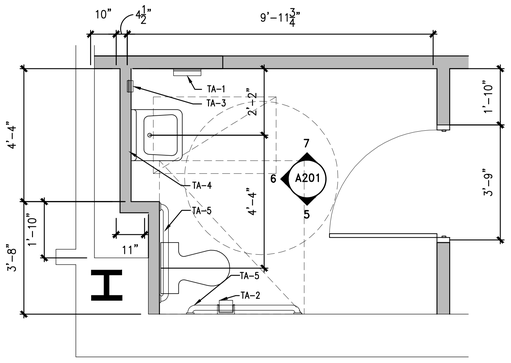

TRUE NORTH

PLAN NORTH

4 A301 TOILET ROOM ENLARGED PLAN
SCALE: 1/2" = 1'-0"

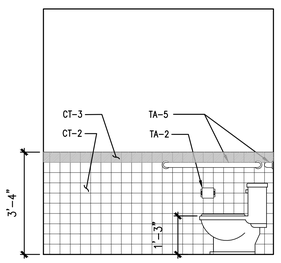

5 A301 TOILET ROOM ELEVATION
SCALE: 1/2" = 1'-0"

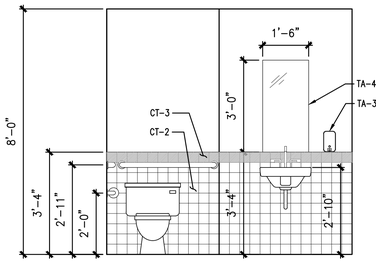

6 A301 TOILET ROOM ELEVATION
SCALE: 1/2" = 1'-0"

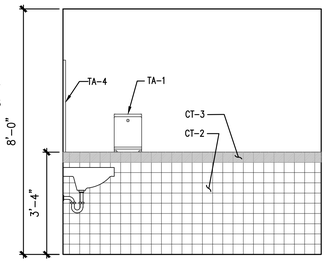

7 A301 TOILET ROOM ELEVATION
SCALE: 1/2" = 1'-0"

FIXTURE MOUNTING HEIGHT SCHEDULE

ANY FIXTURE SHOWN ON THE DRAWINGS WITH THE ABBREVIATION H.C. SHALL BE MOUNTED AT HANDI-CAP HEIGHT PER THIS SCHEDULE. ALL DIMENSIONS ARE FROM FINISHED FLOOR LINE.

FIXTURE	STANDARD	HANDICAP
WATER CLOSET	15" TO TOP OF SEAT	18" TO TOP OF SEAT
LAVATORY	32" TO RIM	34" TO RIM
PAPER TOWEL DISPENSER	48" TO TOWEL OUTLET	38" TO TOWEL OUTLET
TOILET PAPER DISPENSER	24" *1	24" *1
W.C. GRAB BARS	N/A	34" TO CENTERLINE
SOAP DISPENSER	48" TO SOAP OUTLET	40" TO SOAP OUTLET
ROBE HOOK**	64" TO HOOK	48"
CHANNEL-FRAMED MIRROR	40" TO BOTTOM OF UNIT	40" TO BOTTOM OF REFLECTIVE SURFACE

*1 MEASURED TO CENTER LINE OF SPINDLE.
** LOCATED ON INSIDE OF BATHROOM DOOR.

TOILET ACCESSORY SCHEDULE

NOTE: ALL TOILET ACCESSORIES SHALL BE MOUNTED AT HEIGHTS INDICATED IN THE MOUNTING HEIGHT SCHEDULE. SEE SPECIFICATIONS FOR TOILET ACCESSORY REQUIREMENTS.

TA-1 SURFACE MOUNTED AUTO CONTROLLED PAPER TOWEL DISPENSER PROVIDED BY VA AND INSTALLED BY CONTRACTOR

TA-2 SURFACE-MOUNTED TOILET TISSUE DISPENSER FOR UNCONTROLLED DELIVERY, W/ SATIN FINISH.

TA-3 SOAP DISPENSER PROVIDED BY VA AND INSTALLED BY CONTRACTOR

TA-4 CHANNEL-FRAME 18"x 36" GLASS MIRROR WITH BRIGHT POLISHED FINISH.

TA-5 36" & 42" STAINLESS STEEL GRAB BAR WITH PEENED, NONSLIP SURFACE.

CT-1 1"x 1" CERAMIC FLOORING TILE – URBAN PUTTY SPECKLE
CT-2 3"x 3" CERAMIC WALL TILE – URBAN PUTTY
CT-3 3"x 3" CERAMIC WALL TILE – CYPRESS

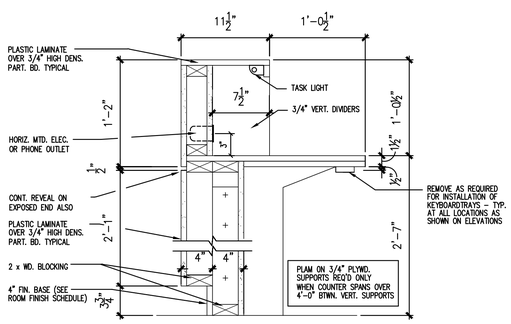

8 A301 RECEPTION DESK–SECTION
SCALE: 1 1/2" = 1'-0"

Additions:	Date:
Revisions:	
⚠ UPDATE SHIELDING NOTES AND MISC. REVISIONS	7-18-14

Consultants

BURDETTE KOEHLER MURPHY & ASSOCIATES, INC.
MECHANICAL / ELECTRICAL CONSULTING ENGINEERING
1416 CLARKVIEW ROAD
BALTIMORE, MARYLAND 21209
410.323.0600 – FAX 410.377.2543

RICKERT ENGINEERING, Inc.
STRUCTURAL ENGINEERING
8813 WALTHAM WOODS ROAD, SUITE 301
BALTIMORE, MARYLAND 21234
410.663.5110 – FAX 410.663.5114

BUILDING COST CONSULTANTS
COST ESTIMATING
12917 – 30TH AVENUE
PLATTSMOUTH, NEBRASKA 68048
402.298.8260 – FAX 402.298.8290

Seal:

ARCHITECTURE
PLANNING
ENGINEERING

POLT DESIGN GROUP
2215 CONOWINGO RD.
Bel Air, Maryland 21015-1436
410.803.2141
fax 410.836.6611
www.polt-design.com

Drawing Scale:
Drawing Start Date:
Drawing Finish Date:
Drawing Approved:

Drawing Title: ELEVATIONS & DETAILS
Approved: Associate Director for Operations:
Approved: Chief, Facilites Engineer:
Approved: Director, Medical Center:

Project Title: MRI SITE PREPERATION
Building No: 361
Checked:
Drawn:
Location: VAMHCS MEDICAL CENTER PERRY POINT, MD

Date: 6/30/14
Project No: 512-09-315
DRAWING NO: A201
Dwg. X Of 29

DEPARTMENT OF VETERANS AFFAIRS

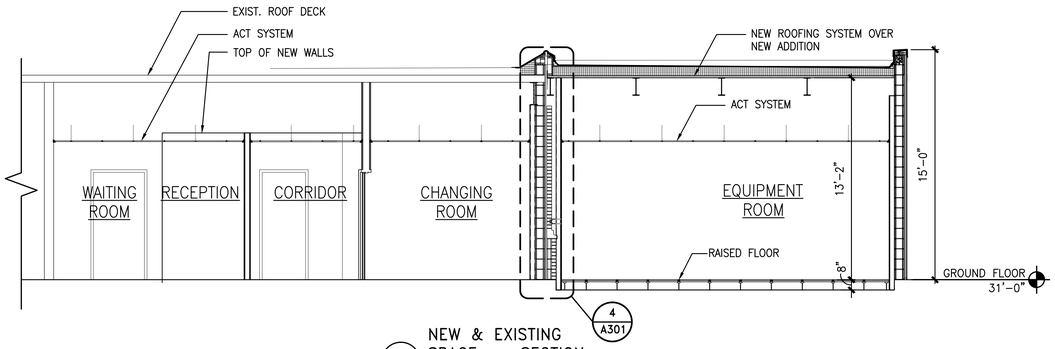

1 A301 NEW & EXISTING SPACE – SECTION
SCALE: 1/4" = 1'-0"

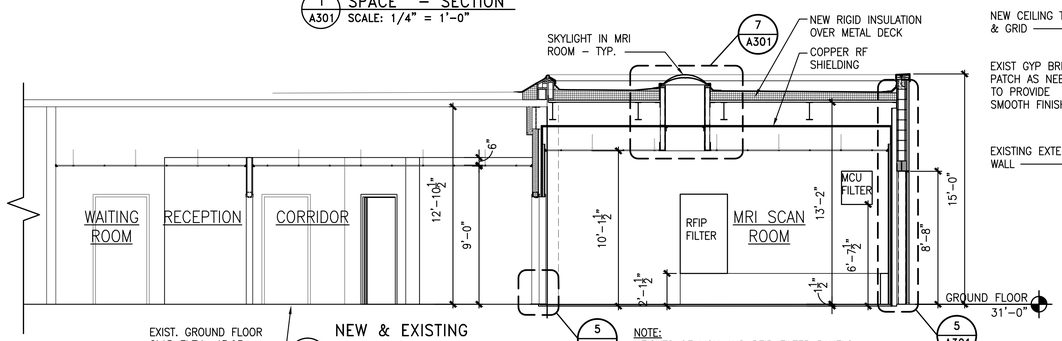

2 A301 NEW & EXISTING SPACE – SECTION
SCALE: 1/4" = 1'-0"

NOTE:
HEIGHTS OF MCU AND RFIP FILTER PANELS ARE APPROXIMATE. CONTRACTOR TO COORDINATE HEIGHTS OF ROUGH OPENINGS WITH HITACHI MEDICAL SYSTEMS AMERICA AND THE RF CONTRACTOR.

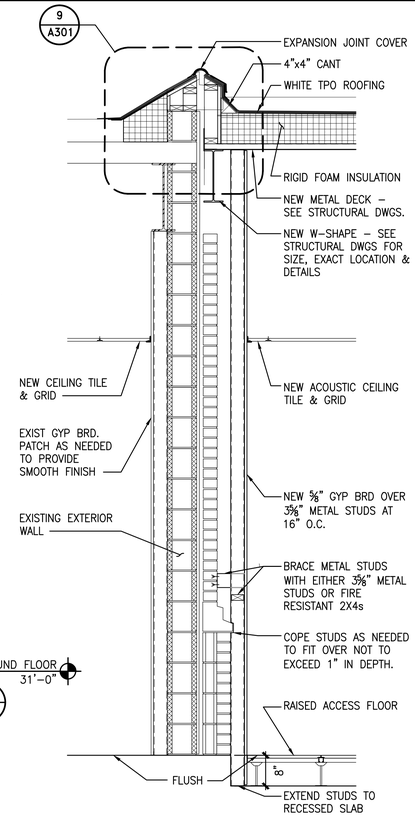

4 A301 WALL – SECTION
SCALE: 3/4" = 1'-0"

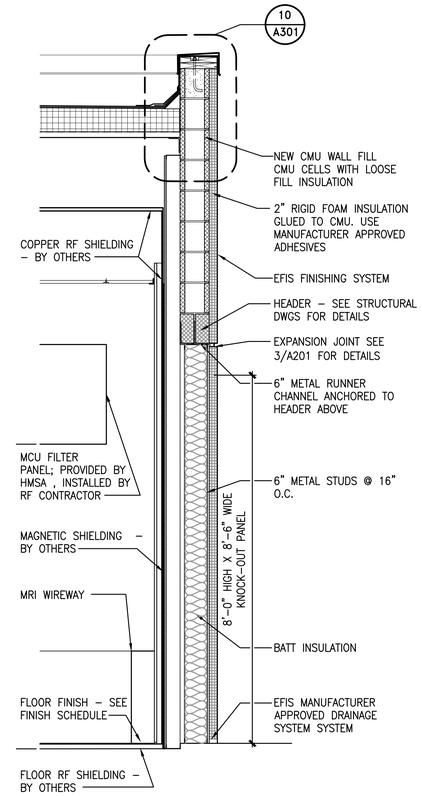

5 A301 WALL – SECTION
SCALE: 3/4" = 1'-0"

NOTES:
1. CONTRACTOR PROTECT ALL UTILITIES ABOVE EXISTING CEILING IN EXISTING SPACE.
2. TEMPORARY FIRE & DUST BARRIERS SHALL BE ERECTED. COORDINATE WITH PROJECT COR FOR LOCATION.

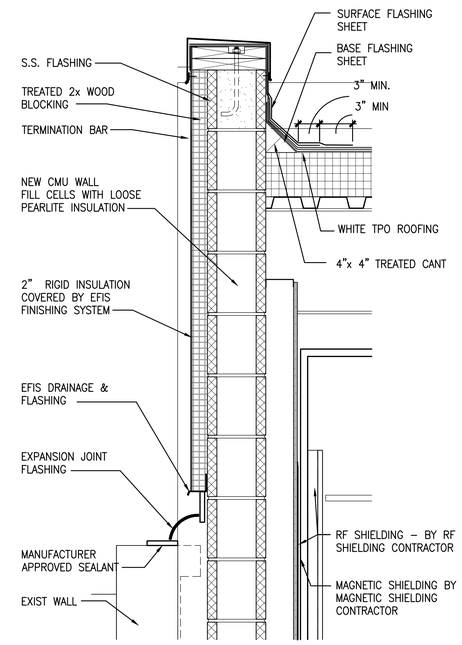

6 A301 EXISTING TUNNEL INTERACTION W/ NEW ADDITION – SECTION
SCALE: 3/4" = 1'-0"

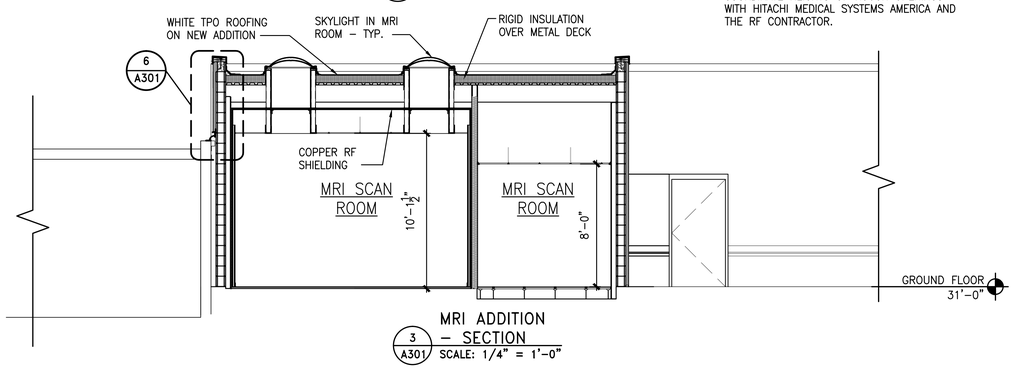

3 A301 MRI ADDITION – SECTION
SCALE: 1/4" = 1'-0"

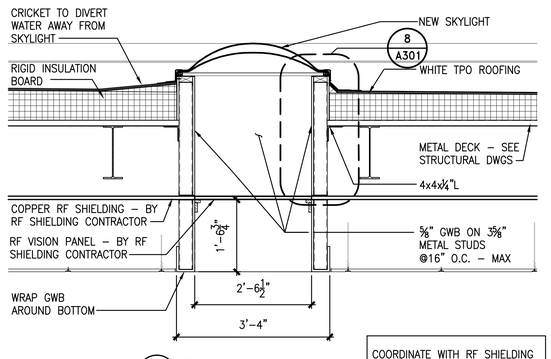

7 A301 SKYLIGHT – SECTION
SCALE: 3/4" = 1'-0"

COORDINATE WITH RF SHIELDING PROVIDER FOR LOCATION OF THE TOP OF RF CEILING.

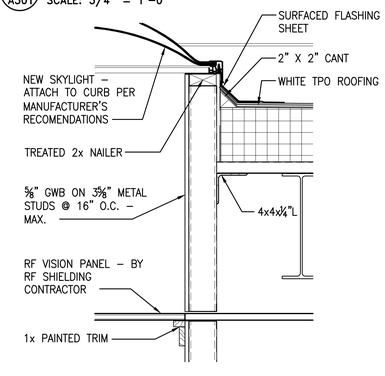

8 A301 SKYLIGHT – DETAIL
SCALE: 1 1/2"" = 1'-0"

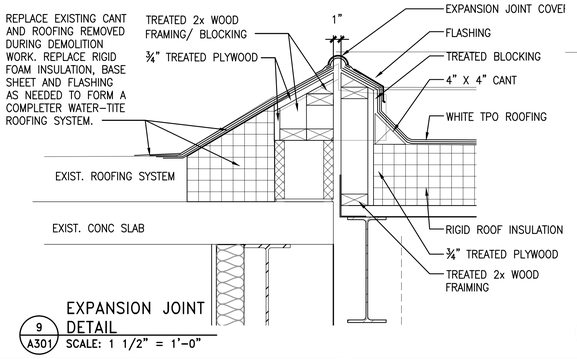

9 A301 EXPANSION JOINT DETAIL
SCALE: 1 1/2" = 1'-0"

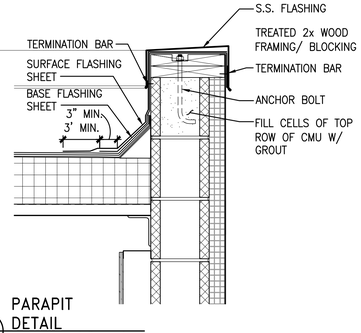

10 A301 PARAPIT DETAIL
SCALE: 1 1/2" = 1'-0"

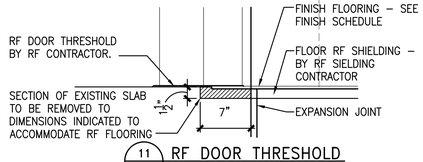

11 A301 RF DOOR THRESHOLD
SCALE: 1 1/2"" = 1'-0"

RF SHIELDING SUPPLIER TO REVIEW HITACHI MEDICAL SYSTEMS (HMSA) DRAWINGS BEFORE PREPARING SHOPDRAWINGS . RF AND MAGNETIC SHIELDING CONTRACTORS TO PAY CLOSE ATTENTION TO MEP DRAWINGS AND PROVIDE ALL NECESSARY COMPONENTS FOR A COMPLETE SHIELDING SYSTEM.

KEYPLAN

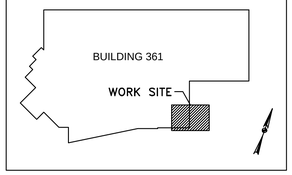

Additions:	Date:
Revisions:	
1 UPDATE SHIELDING NOTES AND MISC. REVISIONS	7-18-14

Consultants

BURDETTE KOEHLER MURPHY & ASSOCIATES, INC.
MECHANICAL / ELECTRICAL CONSULTING ENGINEERING
1416 CLARKVIEW ROAD
BALTIMORE, MARYLAND 21209
410.323.0600 – FAX 410.377.2543

RICKERT ENGINEERING, Inc.
STRUCTURAL ENGINEERING
8813 WALTHAM WOODS ROAD, SUITE 301
BALTIMORE, MARYLAND 21234
410.663.5110 – FAX 410.663.5114

BUILDING COST CONSULTANTS
COST ESTIMATING
12917 – 30TH AVENUE
PLATTSMOUTH, NEBRASKA 68048
402.298.8260 – FAX 402.298.8290

Seal:

ARCHITECTURE PLANNING ENGINEERING
POLT DESIGN GROUP
2215 CONOWINGO RD.
Bel Air, Maryland 21015-1436
410.803.2141
fax 410.836.6611
www.polt-design.com

Drawing Scale:
Drawing Start Date:
Drawing Finish Date:
Drawing Approved:

Drawing Title: SECTIONS & DETAILS
Approved: Associate Director for Operations:
Approved: Chief, Facilites Engineer:
Approved: Director, Medical Center:

Project Title: MRI SITE PREPERATION
Building No: 361
Checked:
Drawn:
Location: VAMHCS MEDICAL CENTER PERRY POINT, MD

Date: 6/30/14
Project No: 512-09-315
DRAWING NO: A101
Dwg. 6 Of 29

DEPARTMENT OF VETERANS AFFAIRS

DOOR SCHEDULE

NO.	DOOR SIZE	HDW.	TYPE	MAT'L.	FIN.	LABEL	FRAME TYPE	MAT'L.	FIN.	DETAIL head	DETAIL jamb	DETAIL sill	LABEL	REMARKS
01	4'-0" x 7'-0" x 1 3/4"	–	B	WD	S-1	45	1	HM	PT	5	6	–	45	
02	(2) 3'-0" x 7'-0" x 1 3/4"	–	E	WD	S-1	–	4	HM	PT	5	6	–	–	
03	3'-6" x 7'-0" x 1 3/4"	–	A	WD	S-1	–	1	HM	PT	5	6	–	–	
04	4'-0" x 7'-0" x 1 3/4"	–	D	WD	S-1	–	3	HM	PT	8	7	–	–	SEE NOTE 1
05	4'-0" x 7'-0" x 1 3/4"	–	–	WD/SS	–	–	1	–	–	–	–	–	–	SEE NOTE 2
06	4'-0" x 7'-0" x 1 3/4"	–	A	WD	S-1	–	1	HM	PT	5	6	–	–	
07	4'-0" x 7'-0" x 1 3/4"	–	A	WD	S-1	–	1	HM	PT	5	6	–	–	
08	4'-0" x 7'-0" x 1 3/4"	–	A	WD	S-1	–	1	HM	PT	5	6	–	–	
09	4'-0" x 7'-0" x 1 3/4"	–	C	INS MTL	PT	–	2	HM	PT	4	3	13	–	

NOTES:
1. POCKET DOOR FRAME TO BE HOLLOW METAL AND STEEL STUD CONSTRUCTION
2. DOOR TO MRI SCAN ROOM SUPPLIED BY RF SHIELDING PROVIDER. DOOR TO BE AIR BLADDER TYPE RF DOOR. WOOD FACE ON EXTERIOR SIDE.

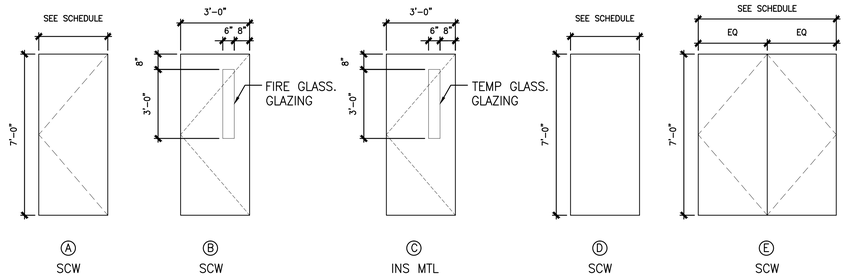

1 A601 DOOR – TYPES
SCALE: 3/8"=1'-0"

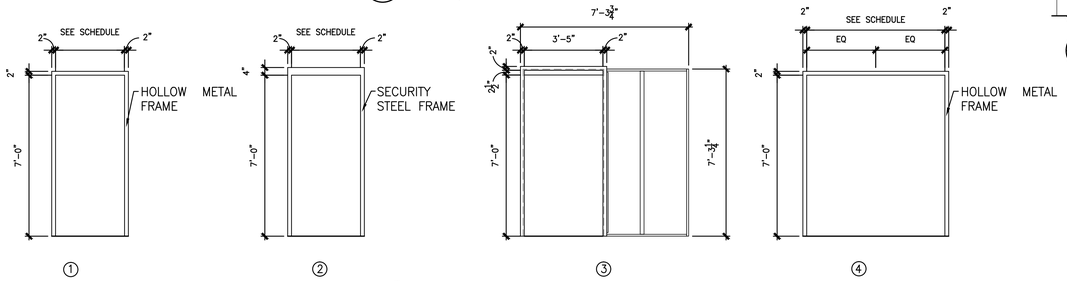

2 A601 DOOR FRAME – TYPES
SCALE: 3/8"=1'-0"

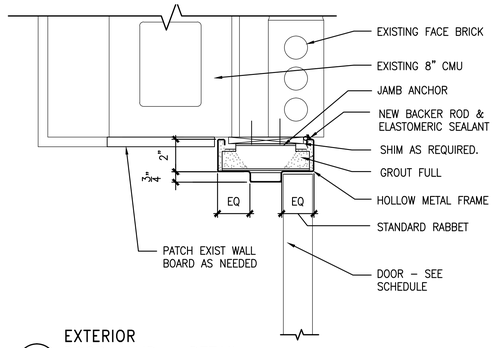

3 A601 EXTERIOR DOOR JAMB – DETAIL
SCALE: 3"=1'-0"

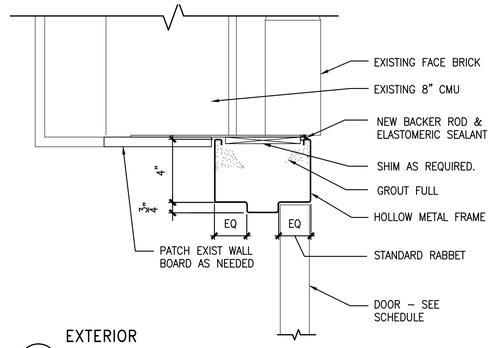

4 A601 EXTERIOR DOOR HEAD– DETAIL
SCALE: 3"=1'-0"

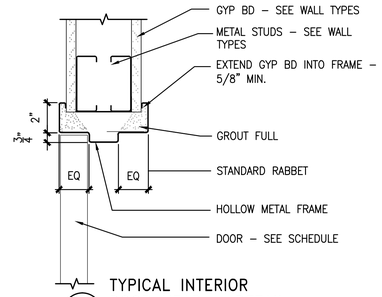

5 A601 TYPICAL INTERIOR DOOR HEAD – DETAIL
SCALE: 3"=1'-0"

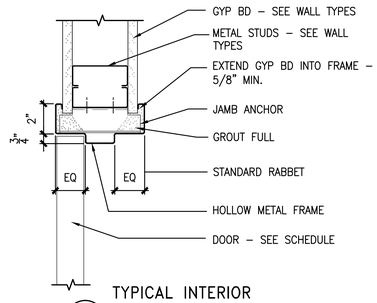

6 A601 TYPICAL INTERIOR DOOR JAMB – DETAIL
SCALE: 3"=1'-0"

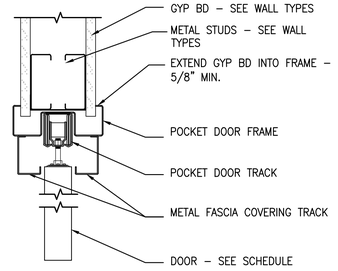

7 A601 POCKET DOOR HEAD – DETAIL
SCALE: 3"=1'-0"

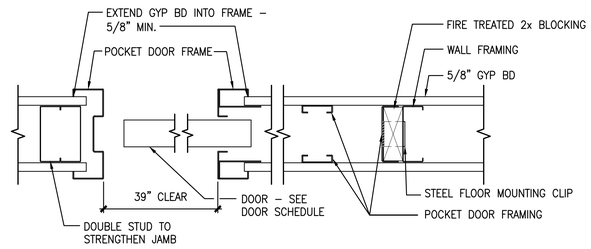

8 A601 POCKET DOOR JAMB & FRAMING – DETAIL
SCALE: 3"=1'-0"

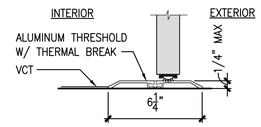

7 A601 EXTERIOR THRESHOLD
SCALE: 3"=1'-0"

ROOM FINISH SCHEDULE

NO.	ROOM NAME	FLOOR FIN.	FLOOR B.	WALLS N.	WALLS FIN.	WALLS E.	WALLS FIN.	WALLS S.	WALLS FIN.	WALLS W.	WALLS FIN.	CEILING TYPE	CEILING HT.	REMARKS
01	WAITING	VP-1	B-1	GYP BD.	PT-1	GYP BD.	P-1	GYP BD.	P-1	GYP BD.	P-1	ACT	9'-0"	
02	RECEPTION	VP-1	B-1	GYP BD.	PT-2	GYP BD.	PT-2	–	–	–	–	ACT	9'-0"	
03	CONTROLLED VESTIBULE	VP-1	B-1	GYP BD.	PT-1	GYP BD.	PT-1	GYP BD.	PT-1	GYP BD.	PT-1	ACT	9'-0"	
04	TOILET	CT-1	–	GYP BD.	PT-1/CT-2	GYP BD.	PT-1/CT-2	GYP BD.	PT-1/CT-2	GYP BD.	PT-1/CT-1	GYP BRD	8'-0"	
05	CONTROL ROOM	VP-1	B-1	GYP BD.	PT-1	GYP BD.	PT-1	GYP BD.	PT-1	GYP BD.	PT-1	ACT	9'-0"	
06	MRI SCAN ROOM	VP-1	B-1	GYP BD.	PT-1	GYP BD.	PT-1	GYP BD.	PT-3	GYP BD.	PT-1	ACT	10'-0"	
07	EQUIPMENT ROOM	CFS	B-1	GYP BD.	PT-1	GYP BD.	PT-1	GYP BD.	PT-1	GYP BD.	PT-1	ACT	8'-0"	
08	CHANGING ROOM	VP-1	B-1	GYP BD.	PT-2	GYP BD.	PT-1	GYP BD.	PT-1	GYP BD.	PT-1	ACT	9'-0"	
09	STORAGE	VP-1	B-1	GYP BD.	PT-1	GYP BD.	PT-1	GYP BD.	PT-1	GYP BD.	PT-1	ACT	8'-0"	

ACT ACOUSTIC CEILING TILE – LIGHTLY FISSURED – WHITE
B-1 VINYL BASE
CFS RAISED COMPUTER FLOORING SYSTEM
CT-1 CERAMIC FLOOR TILE
CT-2 CERAMIC WALL TILE
PT-1 PAINT – SHERWIN WILLIAMS – KILIM BEIGE SW 20092
PT-2 PAINT – SHERWIN WILLIAMS – OYSTER BAY SW 20185
PT-3 PAINT – SHERWIN WILLIAMS – SAGE SW 2860
VP-1 VINYL PLANK – ANTICO – MAPLE

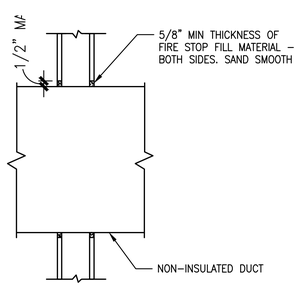

9 A601 FIRE SAFING @ DUCT PENETRATION
SCALE: N.T.S.

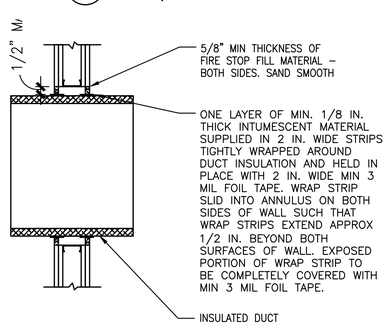

10 A601 FIRE SAFING @ INSULATED DUCT PENETRATION
SCALE: N.T.S.

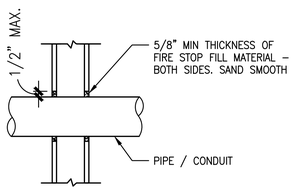

11 A601 FIRE SAFING @ PIPE PENETRATION
SCALE: N.T.S.

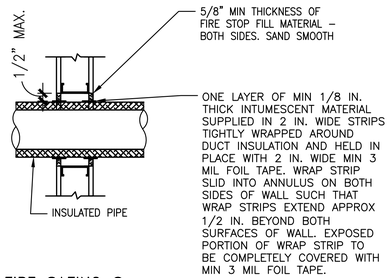

12 A601 FIRE SAFING @ INSULATED PIPE PENETRATION
SCALE: N.T.S.

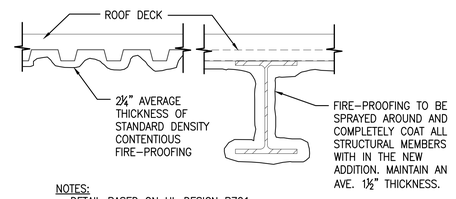

NOTES:
- DETAIL BASED ON UL DESIGN P701
- FIRE PROOFING TO BE A CONTINUOUS COATING WITH OUT GAPS OR HOLES.
- CONTRACTOR TO PROPERLY COVER AND PROTECT ALL SURFACES NOT GETTING COATED WITH FIRE PROOFING

13 A601 SPRAY ON FIRE PROOFING – DETAIL
SCALE: N.T.S.

Additions:	Date:
Revisions:	
1 UPDATE SHIELDING NOTES AND MISC. REVISIONS	7-18-14

Consultants

BURDETTE KOEHLER MURPHY & ASSOCIATES, INC.
MECHANICAL / ELECTRICAL CONSULTING ENGINEERING
1416 CLARKVIEW ROAD
BALTIMORE, MARYLAND 21209
410.323.0600 – FAX 410.377.2543

RICKERT ENGINEERING, Inc.
STRUCTURAL ENGINEERING
8813 WALTHAM WOODS ROAD, SUITE 301
BALTIMORE, MARYLAND 21234
410.663.5110 – FAX 410.663.5114

BUILDING COST CONSULTANTS
COST ESTIMATING
12917 – 30TH AVENUE
PLATTSMOUTH, NEBRASKA 68048
402.298.8260 – FAX 402.298.8290

Seal:

ARCHITECTURE PLANNING ENGINEERING
POLT DESIGN GROUP
2215 CONOWINGO RD. 410.803.2141
Bel Air, Maryland 21015-1436 fax 410.836.6611
www.polt-design.com

Drawing Scale:
Drawing Start Date:
Drawing Finish Date:
Drawing Approved:

Drawing Title: DOOR SCHEDULE & DETAILS
Approved: Associate Director for Operations:
Approved: Chief, Facilites Engineer:
Approved: Director, Medical Center:

Project Title: MRI SITE PREPERATION
Building No: 361
Checked:
Drawn:
Location: VAMHCS MEDICAL CENTER PERRY POINT, MD

Date: 6/30/14
Project No: 512-09-315
DRAWING NO: A601
Dwg. 7 Of 29

DEPARTMENT OF VETERANS AFFAIRS

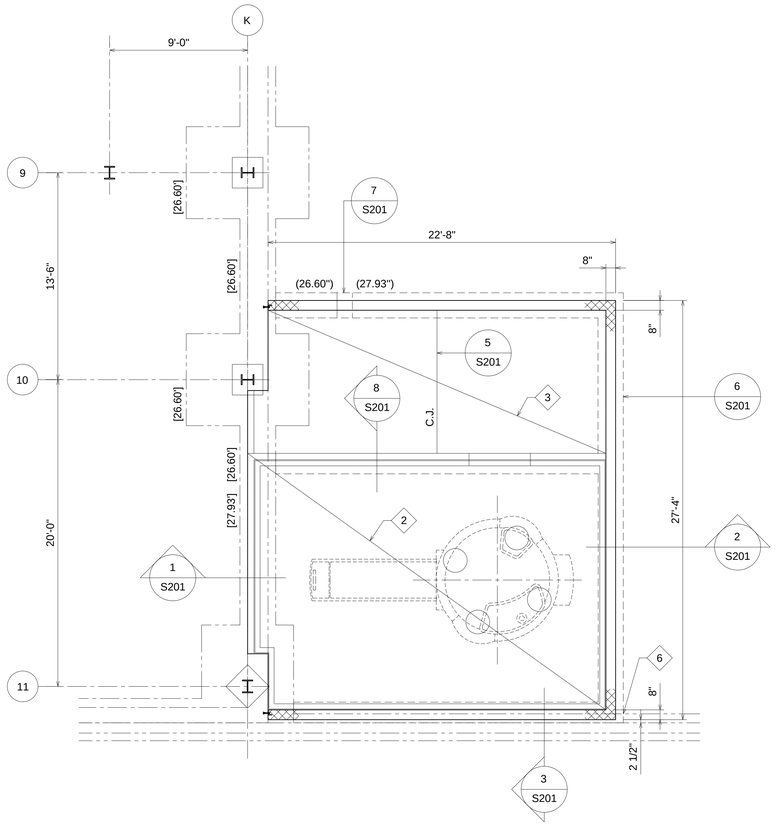

FOUNDATION AND GROUND FLOOR PLAN

1 / S101 SCALE: 1/4" = 1'-0"

NORTH

1. ELEVATION TOP OF EXISTING GROUND FLOOR SLAB = 30.60'
2. MRI ROOM SLABS ON GRADE SHALL BE 8" MINIMUM THICK CONCRETE REINFORCED WITH #4 AT 12" ON CENTER EACH WAY ON A 10 MIL POLYETHYLENE VAPOR BARRIER ON 6" GRANULAR FILL. ELEVATION TOP OF MRI ROOM SLAB ON GRADE IS -1 1/2" AS MEASURED FROM THE TOP OF THE EXISTING GROUND FLOOR SLAB.
3. EQUIPMENT ROOM SLABS ON GRADE SHALL BE 5" MINIMUM THICK CONCRETE REINFORCED WITH 6X6-W1.4XW1.4 WELDED WIRE FABRIC ON A 10 MIL POLYETHYLENE VAPOR BARRIER ON 6" GRANULAR FILL. ELEVATION TOP OF EQUIPMENT ROOM SLAB ON GRADE IS -8" AS MEASURED FROM THE TOP OF THE EXISTING GROUND FLOOR SLAB.
4. ELEVATION TOP OF EXISTING FOOTINGS ARE NOTED THUS [26.60'] IN PLAN.
5. ELEVATION TOP OF NEW FOOTINGS ARE NOTED THUS (27.93') IN PLAN.
6. STEP FOOTING AS REQUIRED TO MATCH THE BOTTOM OF THE EXISTING FOOTING.

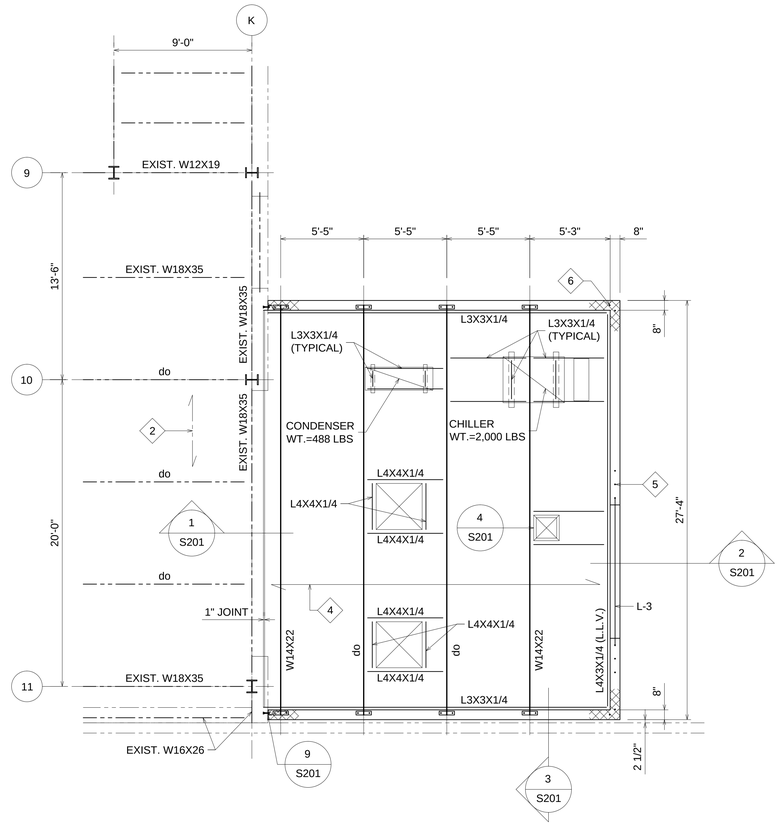

ROOF FRAMING PLAN

2 / S101 SCALE: 1/4" = 1'-0"

NORTH

1. ELEVATION TOP OF EXISTING ROOF SLAB IS 13'-4" ABOVE THE EXISTING GROUND FLOOR SLAB.
2. THE EXISTING ROOF SLAB IS A 5 1/2" LIGHTWEIGHT CONCRETE SLAB FORMED WITH 20 GAGE COMPOSITE METAL DECK.
3. THE ELEVATION TOP OF NEW STEEL SHALL BE +13'-3 1/2" AS MEASURED FROM THE TOP OF THE EXISTING GROUND FLOOR SLAB.
4. THE ROOF DECK SHALL BE 1 1/2" 20 GAGE GALVANIZED TYPE "B" STEEL DECK.
5. PROVIDE A FULLY GROUTED 32" LONG PIER FULL HEIGHT AT EACH JAMB REINFORCED WITH 3-#4. SPACE BARS AT 8" O/C AT THE CENTERLINE OF THE WALL.
6. PROVIDE #4 WITHIN 8" OF ALL WALL CORNERS.

GENERAL NOTES

CODE

A. ALL CONSTRUCTION SHALL CONFORM TO THE PROVISIONS OF THE INTERNATIONAL BUILDING CODE/2012.

DESIGN LIVE LOADS

A. THE MINIMUM DESIGN SUPERIMPOSED LOADS FOR ALL NEW FRAMING IS AS FOLLOWS:

LIVE LOADS	
ROOF	30 PSF
WIND	
BASIC WIND SPEED (3-SEC GUST)	120 MPH
WIND EXPOSURE	D
RISK CATEGORY	IV
ROOF SNOW LOAD	
Pg	30 PSF
Pf	28 PSF
Ce	1.0
I	1.2
Ct	1.1
EARTHQUAKE	
RISK CATAGORY	IV
SEISMIC IMPORTANCE FACTOR	1.5
SS	0.164
S1	0.055
SITE CLASS	D
SDS	0.175
SD1	0.088
SEISMIC DESIGN CATEGORY	C

BASIC SEISMIC-FORCE-RESISTING SYSTEM
INTERMEDIATE REINFORCED MASONRY SHEAR WALLS
R=3.5 AND Cs=0.075
ANALYSIS PROCEDURE - EQUIVALENT LATERAL FORCE

FOUNDATIONS

A. ALL FOOTINGS HAVE BEEN DESIGNED FOR AN ASSUMED SOIL BEARING PRESSURE OF 3000 PSF.

B. THE BOTTOM OF ALL EXTERIOR FOOTINGS SHALL BE A MINIMUM OF 2'-8" BELOW FINISH GRADE.

CAST IN PLACE CONCRETE

A. ALL CONCRETE SHALL BE STONE AGGREGATE CONCRETE HAVING A MINIMUM COMPRESSIVE STRENGTH OF 4000 PSI AT 28 DAYS.

B. ALL REINFORCING BARS SHALL CONFORM TO ASTM A-615 GRADE 60. WELDED WIRE FABRIC SHALL CONFORM TO ASTM A-185.

MASONRY

A. BLOCK SHALL CONFORM TO ASTM C-90.

B. ALL REINFORCING BARS SHALL CONFORM TO ASTM A-615 GRADE 60.

C. MORTAR SHALL CONFORM TO ASTM C-270, TYPE S.

D. GROUT SHALL CONFORM TO ASTM C-476.

E. ALL MASONRY WALLS SHALL BE REINFORCED WITH HORIZONTAL JOINT REINFORCEMENT SPACED VERTICALLY AT 16" ON CENTER UNLESS OTHERWISE NOTED.

F. BRACE AND SHORE ALL MASONRY WALLS AS REQUIRED UNTIL ROOF AND FLOOR DECKS HAVE BEEN COMPLETELY INSTALLED.

G. LAP ALL REINFORCING BARS 40 BAR DIAMETERS MINIMUM.

STRUCTURAL AND MISCELLANEOUS STEEL

A. ALL STEEL SHALL CONFORM TO ASTM A-36 UNLESS NOTED OTHERWISE. ALL WIDE FLANGE SECTIONS SHALL CONFORM TO ASTM A992.

Additions:	Date:
Revisions:	

Consultants

BURDETTE KOEHLER MURPHY & ASSOCIATES, INC.
MECHANICAL / ELECTRICAL CONSULTING ENGINEERING
1423 CLARKVIEW ROAD, SUITE 500
BALTIMORE, MARYLAND 21209
410.323.0600 – FAX 410.377.2543

RICKERT ENGINEERING, Inc.
STRUCTURAL ENGINEERING
8813 WALTHAM WOODS ROAD, SUITE 301
BALTIMORE, MARYLAND 21234
410.663.5110 – FAX 410.663.5114

BUILDING COST CONSULTANTS
COST ESTIMATING
12917 – 30TH AVENUE
PLATTSMOUTH, NEBRASKA 68048
402.298.8260 – FAX 402.298.8290

Seal:

ARCHITECTURE
PLANNING
ENGINEERING

POLT DESIGN GROUP
2215 CONOWINGO RD.
Bel Air, Maryland 21015-1436
410.803.2141
fax 410.836.6611
www.polt-design.com

Drawing Scale:
Drawing Start Date:
Drawing Finish Date:
Drawing Approved:

Drawing Title: STRUCTURAL PLANS AND GENERAL NOTES

Approved: Associate Director for Operations:
Approved: Chief, Facilites Engineer:
Approved: Director, Medical Center:

Project Title: MRI SITE PREPERATION

Building No: 361
Checked:
Drawn:
Location: VAMHCS MEDICAL CENTER PERRY POINT, MD

Date: 7/1/14
Project No: 512-09-315
DRAWING NO: S101
Dwg. 8 Of 29

DEPARTMENT OF VETERANS AFFAIRS

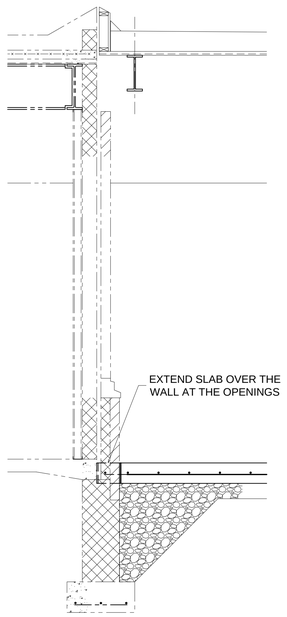

1 SECTION
S201 SCALE: 1/2" = 1'-0"

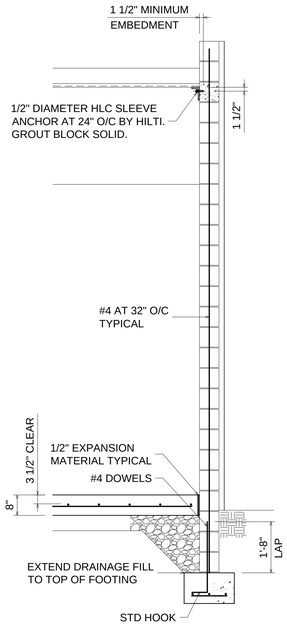

2 SECTION
S201 SCALE: 1/2" = 1'-0"

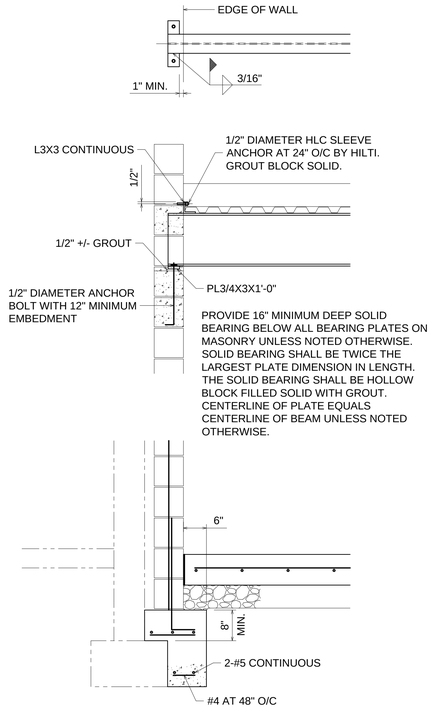

3 DETAIL
S201 SCALE: 3/4" = 1'-0"

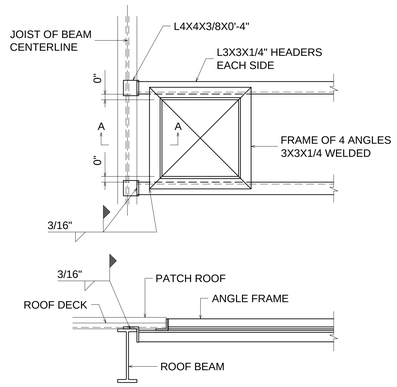

SECTION A-A

4 TYPICAL MECHANICAL OPENING
S201 NOT TO SCALE

MASONRY WALL LINTEL SCHEDULE			
MARK	SIZE	SPAN	REMARKS
P	8" DEEP PRECAST CONCRETE LINTEL REINFORCED WITH 1-#4 TOP AND BOTTOM FOR EACH 4" OF WALL THICKNESS	UP TO 5'-0" CLEAR	PROVIDE 1-#5 TOP AND BOTTOM AT 6" WIDE WALLS
L-3	1-L6X3 1/2X5/16	6'-0" TO 9'-0" CLEAR	1-L FOR EACH 4" THICKNESS OF MASONRY

NOTES:
1. ALL LINTELS SHALL HAVE 6" MINIMUM BEARING ON 8" SOLID MASONRY AT EACH END.
2. PROVIDE LINTELS OVER ALL OPENINGS AS PER ABOVE SCHEDULE INCLUDING DOORS, WINDOWS, DUCTS, LOUVERS, RECESSES, AND OTHER OPENINGS, UNLESS SHOWN OR NOTED OTHERWISE ON STRUCTURAL OR ARCHITECTURAL DRAWINGS.
3. SEE ARCHITECTURAL, MECHANICAL AND ELECTRICAL DRAWINGS FOR DIMENSIONS AND LOCATIONS OF OPENINGS.
4. WRAP END OF LINTELS IN BUILDING PAPER AT CONTROL JOINTS.

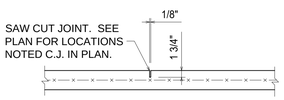

CONTRACTION JOINT

1. ALL SAWCUT JOINTS SHALL BE CUT WITHIN 1-4 HOURS OF THE COMPLETION OF THE SLAB FINISHING OPERATIONS USING THE "SOFT-CUT" METHOD.
2. CUT ALTERNATE WIRES AT CENTERLINE OF JOINT.

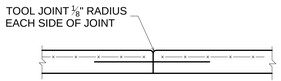

CONSTRUCTION JOINT

1. #4 X 2'-6" LONG DOWELS SPACED AT 2'-6" O/C. CENTER DOWELS AT JOINT CENTERLINE.
2. OMIT DOWELS WHEN CONSTRUCTION JOINTS OCCUR AT CONTROL JOINT. TEST

5 TYPICAL SLAB ON GRADE JOINTS
S201 NOT TO SCALE

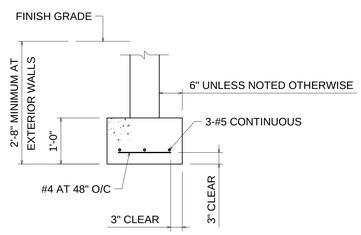

6 TYPICAL WALL FOOTING DETAIL
S201 SCALE: 3/4" = 1'-0"

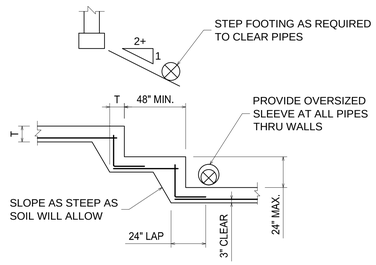

7 TYPICAL STEPPED FOOTING
S201 NOT TO SCALE

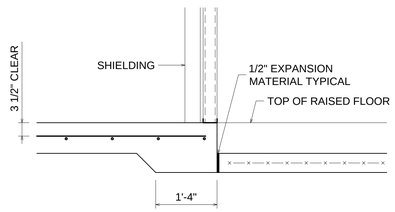

8 SECTION
S201 SCALE: 3/4" = 1'-0"

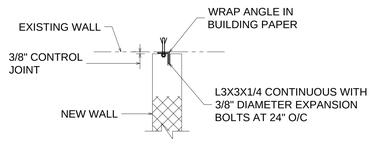

9 TYPICAL KEY ANGLE
S201 SCALE: 3/4" = 1'-0"

Additions: | Date:

Revisions:

Consultants

BURDETTE KOEHLER MURPHY & ASSOCIATES, INC.
MECHANICAL / ELECTRICAL CONSULTING ENGINEERING
1423 CLARKVIEW ROAD, SUITE 500
BALTIMORE, MARYLAND 21209
410.323.0600 – FAX 410.377.2543

RICKERT ENGINEERING, Inc.
STRUCTURAL ENGINEERING
8813 WALTHAM WOODS ROAD, SUITE 301
BALTIMORE, MARYLAND 21234
410.663.5110 – FAX 410.663.5114

BUILDING COST CONSULTANTS
COST ESTIMATING
12917 – 30TH AVENUE
PLATTSMOUTH, NEBRASKA 68048
402.298.8260 – FAX 402.298.8290

Seal:

ARCHITECTURE PLANNING ENGINEERING
POLT DESIGN GROUP
2215 CONOWINGO RD. 410.803.2141
Bel Air, Maryland 21015-1436 fax 410.836.6611
www.polt-design.com

Drawing Scale:
Drawing Start Date:
Drawing Finish Date:
Drawing Approved:

Drawing Title: STRUCTURAL SECTIONS AND DETAILS
Approved: Associate Director for Operations:
Approved: Chief, Facilites Engineer:
Approved: Director, Medical Center:

Project Title: MRI SITE PREPERATION
Building No: 361
Checked:
Drawn:
Location: VAMHCS MEDICAL CENTER PERRY POINT, MD

Date: 7/1/14
Project No: 512-09-315
DRAWING NO: S201
Dwg. 9 Of 29

DEPARTMENT OF VETERANS AFFAIRS

MECHANICAL GENERAL NOTES

1. THE MECHANICAL AND PLUMBING CONTRACT DRAWINGS ARE DIAGRAMMATIC AND ARE INTENDED TO INDICATE SCOPE AND THE GENERAL ARRANGEMENT OF THE SYSTEMS. WHERE APPLICABLE THE FOLLOWING NOTES SHALL APPLY TO ALL MECHANICAL (HVAC, PLUMBING, PIPING AND FIRE PROTECTION) SYSTEMS.
2. THOUGH SOME DUCTWORK AND PIPING OFFSETS AND TRANSITIONS ARE INDICATED, IT IS NOT THE INTENT OF THE DRAWINGS TO SHOW ALL OFFSETS AND TRANSITIONS REQUIRED. THE CONTRACTOR SHALL FULLY COORDINATE THE MECHANICAL WORK WITHIN ITSELF AND WITH THE WORK OF ALL OTHER TRADES TO PROVIDE COMPLETE AND OPERABLE SYSTEMS WITHOUT INTERFERENCES.
3. PROVIDE APPROVED FIRE STOPPING MATERIAL AROUND ALL DUCTWORK AND PIPING PENETRATIONS THROUGH FIRE RATED FLOORS AND WALLS. REFER TO ARCHITECTURAL DRAWINGS FOR LOCATIONS OF FIRE RATED FLOORS AND WALLS.
4. FLASH AND COUNTER FLASH DUCTWORK PENETRATIONS THROUGH ROOF. COORDINATE ROOFING MATERIALS AND INSTALLATION WITH ARCHITECTURAL DETAILS.
5. SUPPORT ALL EQUIPMENT (I.E. AHU'S, HEATERS, FANS, AIR TERMINAL UNITS, ETC.) FROM STRUCTURE WITH SPECIFIED VIBRATION ISOLATION.
6. PROVIDE CEILING ACCESS PANELS WHERE REQUIRED FOR ADEQUATE ACCESS TO ALL CONCEALED EQUIPMENT, VALVES, DAMPERS AND CONTROLS.
7. ALL DUCTWORK SHALL BE CONSTRUCTED OF RIGID SHEET METAL UNLESS OTHERWISE NOTED.
8. REFER TO DOOR SCHEDULE ON ARCHITECTURAL DRAWINGS FOR UNDER CUT DIMENSIONS AND DOOR LOUVER SIZES.
9. COORDINATE DIFFUSER, REGISTER AND GRILLE LOCATIONS AND BORDER TYPES WITH ARCHITECTURAL REFLECTED CEILING PLAN.
10. INSTALL DUCTWORK AND PIPING MAINS TIGHT TO UNDERSIDE OF STRUCTURE UNLESS OTHERWISE INDICATED.
11. REFER TO MECHANICAL DETAILS FOR TYPICAL EQUIPMENT CONNECTIONS.
12. PIPING CONNECTIONS TO HEATING COILS SHALL BE MADE TO PROVIDE COUNTER FLOW BETWEEN WATER AND AIR.
13. PROVIDE CONDENSATE DRAIN PIPING FROM EACH ENVIRONMENTAL CONTROL UNIT TO NEAREST FLOOR DRAIN. PROVIDE CLEAN OUT AT EACH ELBOW, SIZE PER MANUFACTURER.
14. REFER TO STRUCTURAL DRAWINGS FOR EXACT LOCATION OF DUCT PENETRATIONS THRU ROOF. PROVIDE DUCT TRANSITIONS AT ROOF FOR ALL ROOF MOUNTED EQUIPMENT.
15. PATCH AND SEAL ALL REMAINING OPENINGS THROUGH FLOORS, CEILINGS, WALLS, AND ROOF RESULTING FROM DEMOLITION OR NEW WORK WITH MATERIALS AND FINISHES TO MATCH EXISTING CONSTRUCTION AND FIRE RATING.
16. AS AN INTEGRAL PART OF THESE DOCUMENTS, THE CONTRACTOR SHALL REFER TO THE SPECIFICATIONS FOR ADDITIONAL INFORMATION.
17. PRIOR TO THE BALANCING OF SYSTEMS BY THE AABC CERTIFIED BALANCING CONTRACTOR, ALL HIGH PRESSURE AND LOW PRESSURE SYSTEMS SHALL BE TESTED BY THE MECHANICAL CONTRACTOR FOR DUCT LEAKAGE. DUCT LEAKAGE SHALL NOT EXCEED 1% FOR A DURATION OF TEN (10) MINUTES. TEST PRESSURES SHALL BE AS PER SMACNA, HOWEVER, NOT LESS THAN THE FOLLOWING:

    LOW PRESSURE DUCTWORK: 25% ABOVE SYSTEM OPERATING PRESSURE, BUT NOT LESS THAN 2" W.C. (500 PA)

    HIGH PRESSURE DUCTWORK: 25% ABOVE SYSTEM OPERATING PRESSURE, BUT NOT LESS THAN 6" W.C. (1500 PA)

    INSULATION MATERIALS SHALL NOT BE APPLIED UNTIL SYSTEMS HAVE BEEN WITNESSED, DOCUMENTED AND SUBMITTED TO MEET THE ABOVE TESTING REQUIREMENTS. REFER SPECIFICATIONS FOR SYSTEMS INDICATED AS LOW PRESSURE OR HIGH PRESSURE. THE BALANCE CONTRACTOR SHALL WITNESS AND CERTIFY ALL DUCT PRESSURE TESTS.
18. CONTRACTOR SHALL VISIT THE SITE AND VERIFY EXISTING CONDITIONS PRIOR TO THE BEGINNING OF ANY WORK. FAILURE TO VISIT THE SITE SHALL IN NO WAY RELIEVE THE CONTRACTOR FROM ANY RESPONSIBILITY.
19. CONTRACTOR SHALL USE CARE WHEN PERFORMING SELECTIVE DEMOLITION. THE CONTRACTOR SHALL BE RESPONSIBLE FOR DAMAGE TO BUILDING FINISHES, EQUIPMENT, FURNITURE, STRUCTURE, AND MECHANICAL/ELECTRICAL SYSTEMS AND EQUIPMENT. SHOULD ANY DAMAGE OCCUR THE CONTRACTOR SHALL RESTORE DAMAGED AREA/ITEMS TO ORIGINAL CONDITION TO MEET THE OWNER'S SATISFACTION.
20. CONTRACTOR SHALL NOTIFY AND COORDINATE WITH THE OWNER ANY UTILITY OUTAGES. OWNER SHALL BE GIVEN A MINIMUM OF 48 HOURS NOTICE (TWO WORKING DAYS) FOR ANY OUTAGES.
21. HVAC SHALL BE MAINTAINED TO ALL AREAS OUTSIDE OF THE CURRENT PHASE OF THE RENOVATED AREA AT ALL TIMES. PROVIDE TEMPORARY CONNECTIONS AS REQUIRED TO COORDINATE OUTAGES WITH THE OWNER A MINIMUM OF 48 HOURS (TWO WORKING DAYS) IN ADVANCE.
22. DEMOLITION AND NEW WORK THAT WILL RESULT IN DOWN TIME OF SERVICES (HVAC, PLUMBING, MEDICAL GASES, ETC.) SHALL BE PERFORMED AT PREMIUM TIME AS REQUIRED TO MINIMIZE DOWN TIME TO ADJACENT SPACES. COORDINATE ALL OUTAGES WITH VA COR.
23. REFER TO ARCHITECTURAL DRAWINGS FOR ADDITIONAL PHASING INFORMATION. ALL WORK AND ASSOCIATED OUTAGES SHALL BE COORDINATED WITH THE PHASING SCHEDULE AND THE VA COR.
24. SCHEDULE ALL WORK IN OCCUPIED SPACES WITH VAC COR.

MECHANICAL LEGEND

CHILLED WATER SUPPLY	CWS
CHILLED WATER RETURN	CWR
GLYCOL WATER SUPPLY	GWS
GLYCOL WATER RETURN	GWR
REFRIGERANT SUCTION	RS
REFRIGERANT LIQUID	RL
REFRIGERANT GAS	RG
HEATING WATER SUPPLY	HS
HEATING WATER RETURN	HR
CHECK VALVE	
BALL VALVE	
BUTTERFLY VALVE	
BALANCING VALVE W/ FLOW METER FITTING (VENTURI TYPE)	
3 PORT MODULATING CONTROL VALVE	
2 PORT MODULATING CONTROL VALVE	
WYE STRAINER W/HOSE END VALVE	
FLANGED CONNECTION	
GAUGE AND VALVE	
INLINE CIRCULATING PUMP	
TEMPERATURE/PRESSURE TEST PORT	
TEE	
THERMOMETER	
UNION	
PIPING CAP	
MANUAL AIR VENT	
AUTOMATIC AIR VENT	
PIPE GUIDE OR SLEEVE	
PIPE ANCHOR	
PIPING ELBOW DOWN	
PIPING ELBOW UP	
PIPE CONNECTION BOTTOM	
PIPE CONNECTION TOP	
HOSE END VALVE	
VALVE IN VERTICAL POSITION	
HEAT TRACED AND INSULATED PIPE	
SUPPLY AIR DUCT UP (DASHED LINES FOR DOWN)	
RETURN & EXHAUST AIR DUCT UP (DASHED LINES FOR DOWN)	
FLEXIBLE CONNECTION	FCON
FLEXIBLE DUCT	
DOUBLE THICKNESS TURNING VANES	
EXISTING DUCTWORK	
DUCTWORK TO BE REMOVED	
OPEN ENDED DUCT	OED
DUCTWORK WITH SOUND LINING	
FLEXIBLE DUCT AND EQUIPMENT CONNECTOR	
NEW DUCTWORK	
DUCT TRANSITION ROUND TO RECTANGULAR	ø
DUCT TRANSITION	
CHANGE IN DUCT ELEVATION (R-RISE, D-DROP)	R D
DUCT SIZE (FIRST FIGURE IS SIDE SHOWN)	12x20
LINEAR SLOT DIFFUSER	
BALANCING DAMPER	
MOTOR OPERATED DAMPER	MOD
FIRE DAMPER WITH ACCESS PANEL	FD
COMBINATION FIRE/SMOKE DAMPER WITH SMOKE DETECTORS AND ACCESS PANEL	F/SD
BACKDRAFT DAMPER	BDD
ACCESS DOOR	AD
FIRE DETECTOR (FIRESTAT)	
SMOKE DETECTOR	
ELECTRIC DUCT HEATER	EDH
THERMOSTAT	T
LIMIT OF DEMOLITION	
CONNECT TO EXISTING	
FAN SWITCH	
DOOR LOUVER	
UNDERCUT DOOR	

MECHANICAL ABBREVIATIONS

AIR FOIL	AF	ENGINEERING CONTROL CENTER	ECC	NORMALLY CLOSED	NC
ABOVE FINISHED FLOOR	AFF	EXTERNAL STATIC PRESSURE	ESP	NORMALLY OPEN / NUMBER	NO
AIR HANDLING UNIT	AHU	ENTERING WATER TEMPERATURE	EWT	OUTSIDE AIR	OA
AIR PRESSURE DROP	APD	FLEXIBLE CONNECTION / FORWARD CURVED	FC	OPEN END DUCT	OED
AUTOMATIC TEMPERATURE CONTROLS	ATC	FULL LOAD AMPS	FLA	POUNDS PER SQUARE INCH	PSI
BUILDING AUTOMATION SYSTEM	BAS	FINS PER INCH	FPI	PRESSURE	PRESS
BRAKE HORSEPOWER	BHP	FEET PER MINUTE	FPM	QUANTITY	QTY
BACKWARD INCLINED	BI	FEET	FT	RETURN AIR	RA
BRITISH THERMAL UNIT	BTU	FACE VELOCITY	FV	RELATIVE HUMIDITY	RH
BRITISH THERMAL UNITS PER HOUR	BTUH	GALLON(S)	GAL	REVOLUTIONS PER MINUTE	RPM
CAPACITY	CAP	GALLONS PER MINUTE	GPM	REMOVE EXISTING	RX
CUBIC FEET PER MINUITE	CFM	HORSEPOWER	HP	SUPPLY AIR	SA
COLD WATER (DOMESTIC)	CW	HEATING WATER SUPPLY	HS	STATIC PRESSURE	SP
CHILLED WATER SUPPLY	CWS	HEATING WATER RETURN	HR	TOTAL STATIC PRESSURE	TSP
CHILLED WATER RETURN	CWR	HERTZ	HZ	TYPICAL	TYP
CONNECT TO EXISTING	CX	INCH(ES)	IN	VOLTS	V
DRY BULB	DB	KILOWATT	KW	VARIABLE AIR VOLUME	VAV
DESIGNATION	DESIG	LEAVING AIR TEMPERATURE	LAT	VARIABLE FREQUENCY DRIVE	VFD
DOWN	DN	POUNDS	LBS	WET BULB	WB
DIFFERENTIAL PRESSURE SENSOR	DPS	LEAVING WATER TEMPERATURE	LWT	WATER COLUMN	WC
EXHAUST AIR	EA	MAXIMUM	MAX	WATER GAUGE	WG
ENTERING AIR TEMPERATURE	EAT	THOUSAND BRITISH THERMAL UNITS PER HOUR	MBH	WATER PRESSURE DROP	WPD
ENERGY EFFICIENCY RATIO	EER	MINIMUM CIRCUIT AMPACITY	MCA		
EXHAUST FAN	EF	MINIMUM	MIN		

Additions: *Date:*

Revisions:

Consultants

BURDETTE KOEHLER MURPHY & ASSOCIATES, INC.
MECHANICAL / ELECTRICAL CONSULTING ENGINEERING
1416 CLARKVIEW ROAD
BALTIMORE, MARYLAND 21209
410.323.0600 – FAX 410.377.2543

RICKERT ENGINEERING, Inc.
STRUCTURAL ENGINEERING
8813 WALTHAM WOODS ROAD, SUITE 301
BALTIMORE, MARYLAND 21234
410.663.5110 – FAX 410.663.5114

BUILDING COST CONSULTANTS
COST ESTIMATING
12917 – 30TH AVENUE
PLATTSMOUTH, NEBRASKA 68048
402.298.8260 – FAX 402.298.8290

Seal:

ARCHITECTURE PLANNING ENGINEERING
POLT DESIGN GROUP
2215 CONOWINGO RD. 410.803.2141
Bel Air, Maryland 21015-1436 fax 410.836.6611
www.polt-design.com

Drawing Scale: NONE
Drawing Start Date:
Drawing Finish Date:
Drawing Approved:

Drawing Title: MECHANICAL LEGEND, ABBREVIATIONS, & GENERAL NOTES
Approved: Associate Director for Operations:
Approved: Chief, Facilites Engineer:
Approved: Director, Medical Center:

Project Title: MRI SITE PREPERATION
Building No: 361
Checked: MAF
Drawn: CSR
Location: VAMHCS MEDICAL CENTER PERRY POINT, MD

Date: 06/30/14
Project No: 512-09-315
DRAWING NO: M001
Dwg. 10 Of 29

DEPARTMENT OF VETERANS AFFAIRS

BKM# 060310.090

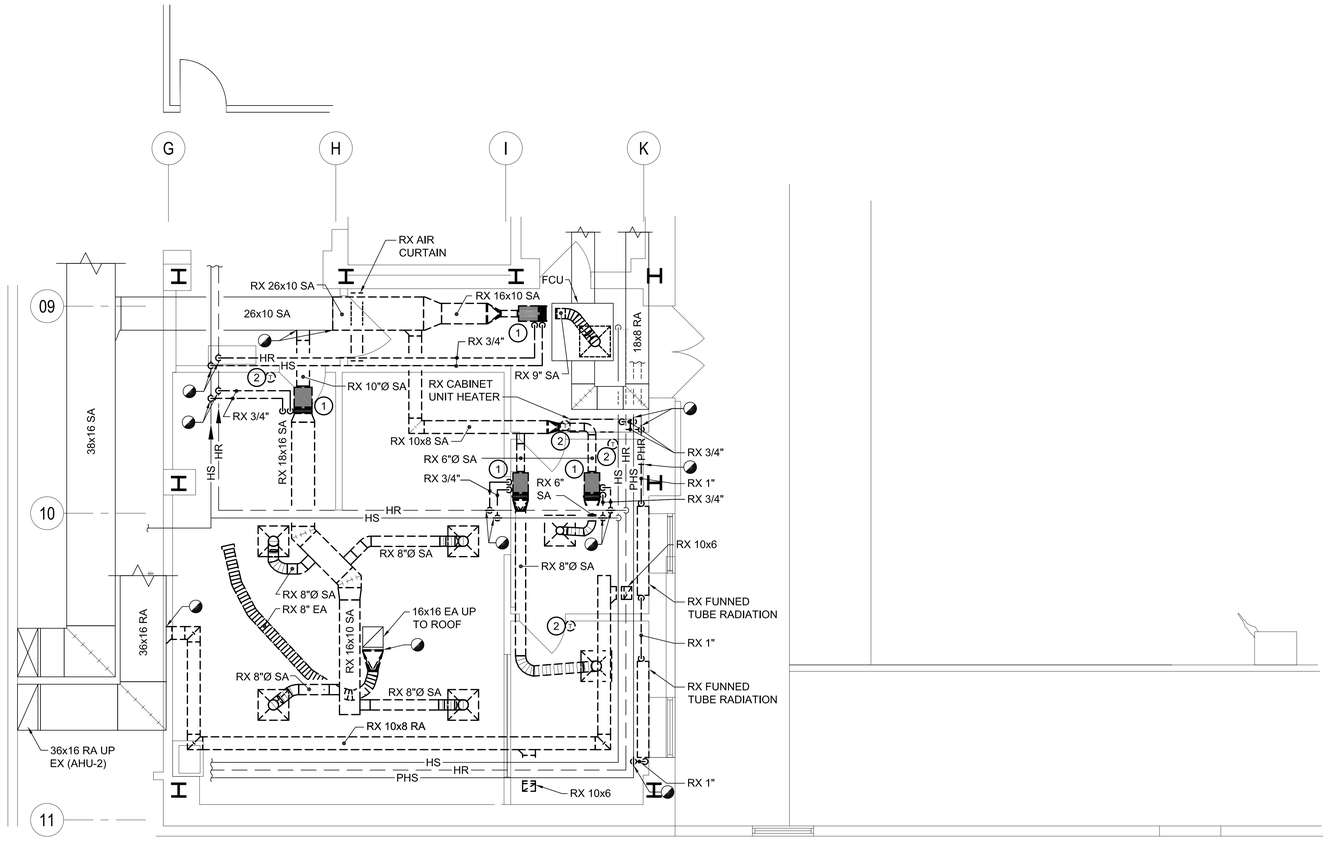

1 PART GROUND PLAN - MECHANICAL - DEMOLITION

SCALE: 1/4 " = 1'-0"

GENERAL NOTES:

1. REFER TO M001 FOR MECHANICAL LEGEND, ABBREVIATIONS AND GENERAL NOTES.

DRAWING NOTES:

1. REMOVE EXISTING SUPPLY AIR TERMINAL UNIT AND ALL ASSOCIATED DUCTWORK, AIR DEVICES, PIPING, HANGERS, AND CONTROLS.
2. REMOVE EXISTING TEMPERATURE SENSOR AND ALL ASSOCIATED CONTROL WIRING / TUBING. CAP EXISTING PNEUMATIC TUBING TO REMAIN AIR TIGHT.

KEYPLAN

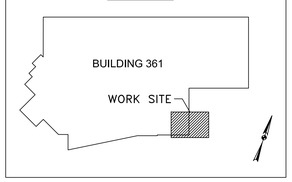

Additions:	Date:
Revisions:	

Consultants

BURDETTE KOEHLER MURPHY & ASSOCIATES, INC.
MECHANICAL / ELECTRICAL CONSULTING ENGINEERING
1416 CLARKVIEW ROAD
BALTIMORE, MARYLAND 21209
410.323.0600 – FAX 410.377.2543

RICKERT ENGINEERING, Inc.
STRUCTURAL ENGINEERING
8813 WALTHAM WOODS ROAD, SUITE 301
BALTIMORE, MARYLAND 21234
410.663.5110 – FAX 410.663.5114

BUILDING COST CONSULTANTS
COST ESTIMATING
12917 – 30TH AVENUE
PLATTSMOUTH, NEBRASKA 68048
402.298.8260 – FAX 402.298.8290

Seal:

ARCHITECTURE PLANNING ENGINEERING
POLT DESIGN GROUP
2215 CONOWINGO RD. 410.803.2141
Bel Air, Maryland 21015-1436 fax 410.836.6611
www.polt-design.com

Drawing Scale:
Drawing Start Date:
Drawing Finish Date:
Drawing Approved:

Drawing Title: PART GROUND FLOOR PLAN – MECHANICAL – DEMOLITION
Approved: Associate Director for Operations:
Approved: Chief, Facilites Engineer:
Approved: Director, Medical Center:

Project Title: MRI SITE PREPERATION
Building No: 361
Checked: MAF
Drawn: CSR
Location: VAMHCS MEDICAL CENTER PERRY POINT, MD

Date: 06/30/14
Project No: 512-09-315
DRAWING NO: M101
Dwg. 11 Of 29

DEPARTMENT OF VETERANS AFFAIRS

BKM# 060310.090

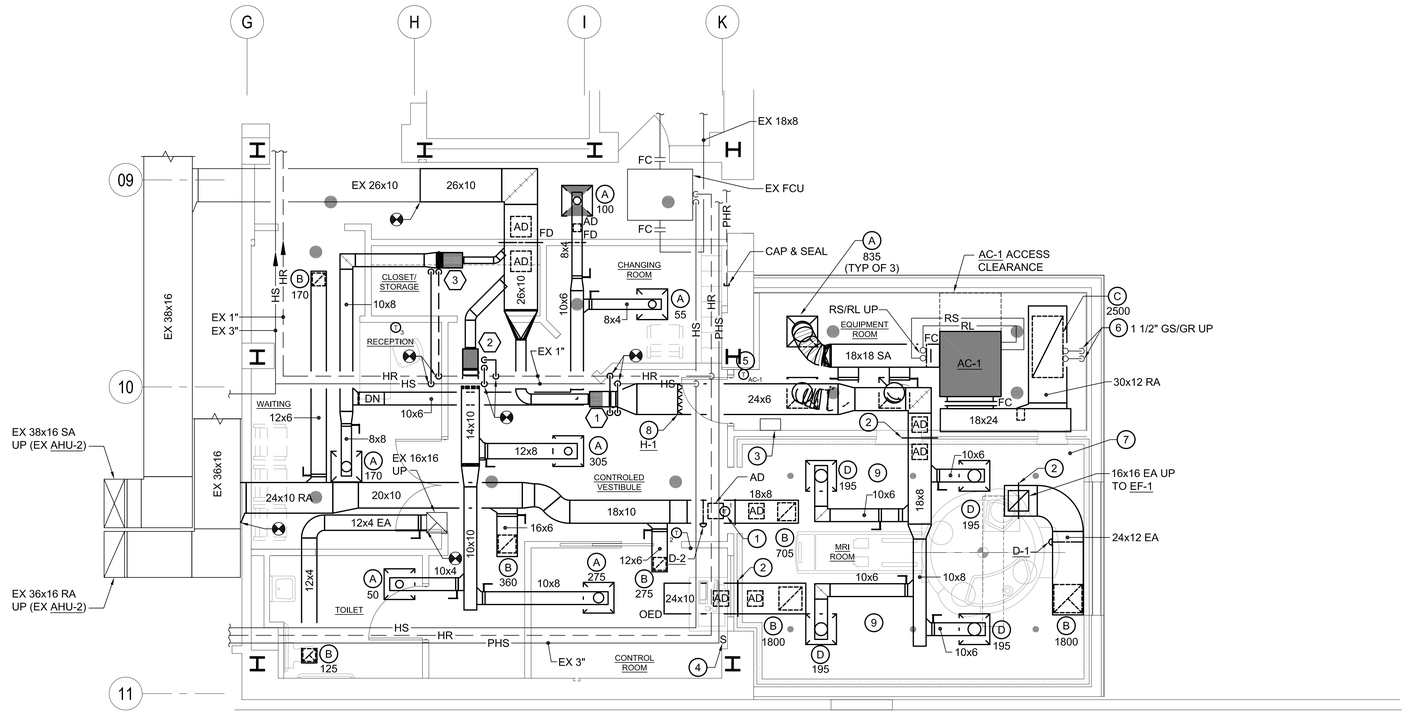

1 PART GROUND FLOOR PLAN - MECHANICAL - NEW WORK

SCALE: 1/4 " = 1'-0"

GENERAL NOTES:

1. REFER TO M001 FOR MECHANICAL LEGEND, ABBREVIATIONS AND GENERAL NOTES.
2. ALL REFRIGERANT PIPING SHALL BE SIZED BY MANUFACTURER'S RECOMMENDATIONS.

DRAWING NOTES:

1. DUCT MOUNTED TEMPERATURE/HUMIDITY SENSOR.
2. R/F WAVEGUIDE FILTER. PROVIDE ACCESS DOOR IN DUCTWORK BOTH UPSTREAM AND DOWNSTREAM OF R/F WAVEGUIDE FILTER (TYPICAL).
3. WALL-MOUNTED ELECTRIC HUMIDIFIER. EXTEND ATMOSPHERIC STEAM TUBING TO DUCT-MOUNTED STEAM DISPERSION PANEL.
4. MANUAL EMERGENCY EXHAUST FAN STARTER SWITCH. REFER TO AUTOMATIC TEMPERATURE CONTROLS FOR ADDITIONAL REQUIREMENTS.
5. TEMPERATURE/ HUMIDITY SENSOR PROVIDED BY ENVIRONMENTAL CONTROL UNIT MANUFACTURER.
6. 1 1/2" GLYCOL SUPPLY AND RETURN PIPING UP THROUGH ROOF AND DOWN TO MRI EQUIPMENT HEAT EXCHANGER. REFER TO MRI COOLING EQUIPMENT SCHEMATIC DIAGRAM FOR PIPING SPECIALTIES AND ADDITIONAL REQUIREMENTS.
7. ALL DUCTWORK WITHIN MRI ROOM SHALL BE NON-FERROUS (ALUMINUM) CONSTRUCTION.
8. DUCT-MOUNTED STEAM DISPERSION PANEL. PROVIDE MINIMUM 36" STRAIGHT STAINLESS STEEL DUCTWORK IMMEDIATELY DOWNSTREAM OF PANEL.
9. DUCTWORK AND PIPING SHALL NOT BE INSTALLED IN SKYLIGHT AREA. REFER TO ARCHITECTURAL DIVISION FOR ADDITIONAL REQUIREMENTS.

KEYPLAN

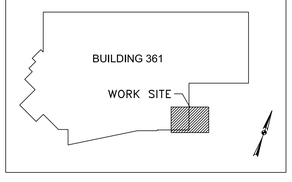

Additions:	Date:
Revisions:	

Consultants

BURDETTE KOEHLER MURPHY & ASSOCIATES, INC.
MECHANICAL / ELECTRICAL CONSULTING ENGINEERING
1416 CLARKVIEW ROAD
BALTIMORE, MARYLAND 21209
410.323.0600 – FAX 410.377.2543

RICKERT ENGINEERING, Inc.
STRUCTURAL ENGINEERING
8813 WALTHAM WOODS ROAD, SUITE 301
BALTIMORE, MARYLAND 21234
410.663.5110 – FAX 410.663.5114

BUILDING COST CONSULTANTS
COST ESTIMATING
12917 – 30TH AVENUE
PLATTSMOUTH, NEBRASKA 68048
402.298.8260 – FAX 402.298.8290

Seal:

ARCHITECTURE PLANNING ENGINEERING
POLT DESIGN GROUP
2215 CONOWINGO RD.
Bel Air, Maryland 21015-1436
410.803.2141
fax 410.836.6611
www.polt-design.com

Drawing Scale:
Drawing Start Date:
Drawing Finish Date:
Drawing Approved:

Drawing Title: PART GROUND FLOOR PLAN – MECHANICAL – NEW WORK
Approved: Associate Director for Operations:
Approved: Chief, Facilites Engineer:
Approved: Director, Medical Center:

Project Title: MRI SITE PREPERATION
Building No: 361
Checked: MAF
Drawn: CSR
Location: VAMHCS MEDICAL CENTER PERRY POINT, MD

Date: 06/30/14
Project No: 512-09-315
DRAWING NO: M201
Dwg. 12 Of 29

DEPARTMENT OF VETERANS AFFAIRS

BKM# 060310.090

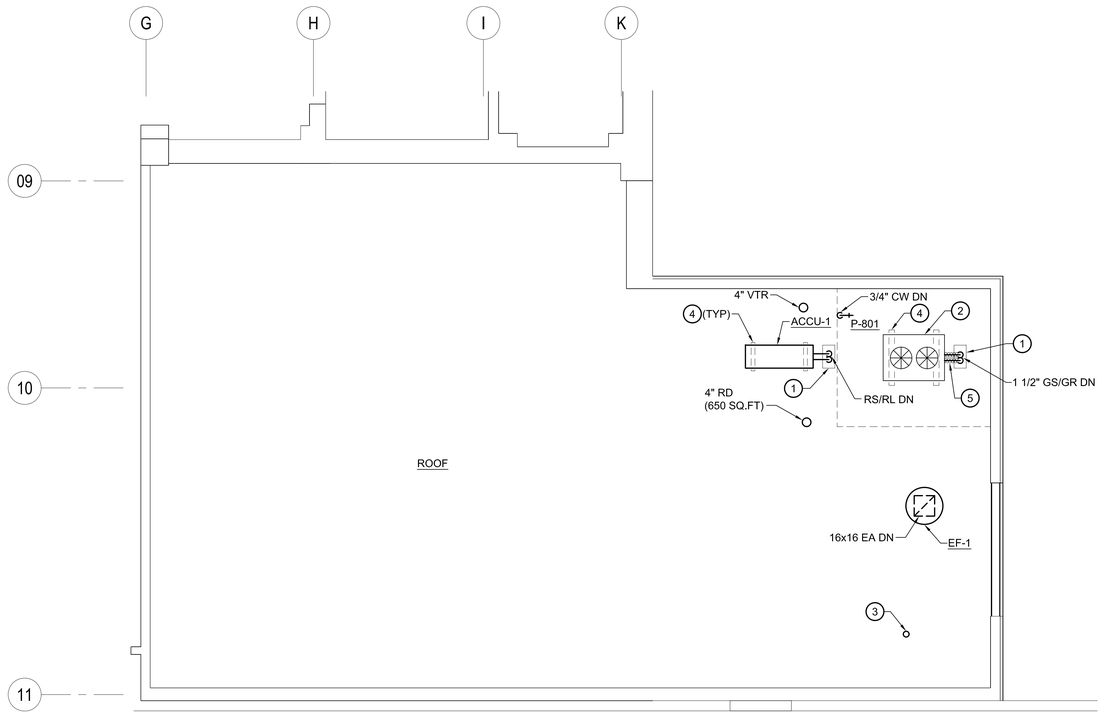

1 PART ROOF PLAN - MECHANICAL - NEW WORK

SCALE: 1/4 " = 1'-0"

GENERAL NOTES:

1. REFER TO M001 FOR MECHANICAL LEGEND, ABBREVIATIONS AND GENERAL NOTES AND P001 FOR PLUMBING LEGEND, ABBREVIATIONS AND GENERAL NOTES.
2. ALL REFRIGERANT PIPING SHALL BE SIZED PER MANUFACTURER'S RECOMMENDATIONS.

DRAWING NOTES:

1. PRIVIDE PATE MODEL PCC ROOF CURB OR APPROVED EQUAL FOR ROOF PENETRATION OF TWO (2) PIPES AND ELECTRICAL CONDUITS SERVING CONDENSING UNIT. FLASH AND SEAL TO ROOF.
2. DIMPLEX MEDKOOL AC CHILLER, FURNISHED BY MRI EQUIPMENT MANUFACTURER. INSTALLED BY CONTRACTOR.
3. 6" CRYOGEN QUENCH VENT THROUGH ROOF. PROVIDE PIPING GOOSENECK WITH 1/2" WIRE MESH SCREEN TERMINATED AT 42" ABOVE ROOF LEVEL. PROVIDE WARNING SIGN ON ROOF THAT READS: "LOW TEMPERATURE HELIUM VENT. COORDINATE WITH FACILITY OPERATIONS STAFF PRIOR TO ACCESSING ROOF."
4. PROVIDE PATE MODEL ES EQUIPMENT SUPPORT OR APPROVED EQUAL. FLASH AND SEAL TO ROOF.
5. PROVIDE 4 W/FT. ELECTRIC HEAT TRACING ON EXTERIOR GLYCOL SUPPLY AND RETURN PIPING WITH TEMPERATURE SENSOR TO MAINTAIN A MINIMUM WATER TEMPERATURE OF 40°F.

KEYPLAN

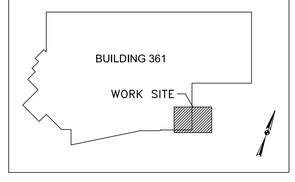

Additions:	Date:
Revisions:	

Consultants

BURDETTE KOEHLER MURPHY & ASSOCIATES, INC.
MECHANICAL / ELECTRICAL CONSULTING ENGINEERING
1416 CLARKVIEW ROAD
BALTIMORE, MARYLAND 21209
410.323.0600 – FAX 410.377.2543

RICKERT ENGINEERING, Inc.
STRUCTURAL ENGINEERING
8813 WALTHAM WOODS ROAD, SUITE 301
BALTIMORE, MARYLAND 21234
410.663.5110 – FAX 410.663.5114

BUILDING COST CONSULTANTS
COST ESTIMATING
12917 – 30TH AVENUE
PLATTSMOUTH, NEBRASKA 68048
402.298.8260 – FAX 402.298.8290

Seal:

ARCHITECTURE
PLANNING
ENGINEERING
POLT DESIGN GROUP
2215 CONOWINGO RD.
Bel Air, Maryland 21015–1436
410.803.2141
fax 410.836.6611
www.polt–design.com

Drawing Scale:
Drawing Start Date:
Drawing Finish Date:
Drawing Approved:

Drawing Title: PART ROOF PLAN – MECHANICAL – NEW WORK
Approved: Associate Director for Operations:
Approved: Chief, Facilites Engineer:
Approved: Director, Medical Center:

Project Title: MRI SITE PREPERATION
Building No: 361
Checked: MAF
Drawn: CSR
Location: VAMHCS MEDICAL CENTER PERRY POINT, MD

Date: 06/30/14
Project No: 512–09–315
DRAWING NO: M202
Dwg. 13 Of 29

DEPARTMENT OF VETERANS AFFAIRS

BKM# 060310.090

INPUT / OUTPUT SCHEDULE

	QUANTITY OF UNIT SYSTEM	I/O LEGEND X - REQUIRED POINT	INPUTS															OUTPUTS								SYSTEM FEATURES																		GENERAL	
			ANALOG							BINARY								DIGITAL				ANALOG				ALARMS							APPLICATION PROGRAMS											
			MEASURED			CALCULATED																																							
			TEMPERATURE	PRESSURE	RH	AIR FLOW/FLUID FLOW	KWH	ENTHALPY	RUN TIME	STATUS	FILTER	SMOKE	FREEZE	STATUS	METER	DP SWITCH	CURRENT SWITCH	END SWITCH	OFF ON	OFF AUTO ON	OFF HIGH LOW	OPEN CLOSE	DAMPER POSITION	VALVE POSITION	SET POINT ADJ.	AOP	AOE	HIGH ANALOG	LOW ANALOG	HIGH BINARY	LOW BINARY	FAILURE	SMOKE	TIME SCHEDULING	DEMAND LIMITING	PREVENTIVE MAINTENANCE	DUTY CYCLE	START STOP OPT	ENTHALPY ECON	SMOKE OPT	TREND	ALARM INSTRUMENT	DDC	MANUAL OVERRIDE	DRYBULB ECON	COLOR GRAPHICS	
	-	SUPPLY AIR TERMINAL UNITS (TYP)	X			X																		X									X									X		X		
	1	EF-1												X			X		X												X											X		X		
	1	CRU-1																													X											X		X		

ATC GENERAL NOTES

MC025

1. THE ATC WORK SHALL INCLUDE PROVISIONS FOR A COMPLETE AND OPERABLE CONTROL SYSTEM, INCLUDING ALL DEVICES REQUIRED TO ACHIEVE THE SEQUENCES AND FUNCTIONS INDICATED THROUGHOUT THE CONTRACT DOCUMENTS.
2. THE ATC CONTRACTOR SHALL FURNISH AND INSTALL ALL ELECTRICAL WIRING AND CONDUIT FROM POWER SOURCE, INCLUDING TERMINATION TO ALL REQUIRED ATC RELATED POWER CONNECTIONS INCLUDING, BUT NOT LIMITED TO, DDC CONTROLLERS (PROVIDE LOW VOLTAGE CONTROLLER FOR AIR TERMINAL UNITS INCLUDING TRANSFORMERS AND DISCONNECT SWITCHES AS REQUIRED), SENSORS, VALVE AND DAMPER ACTUATORS (INCLUDING SMOKE DAMPERS), AIR FLOW MONITORS, ATC PANELS, ETC. THE ATC CONTRACTOR SHALL OBTAIN A SEPARATE ELECTRICAL PERMIT AS REQUIRED BY THE LOCAL AUTHORITY. THE ATC CONTRACTOR SHALL BE WHOLLY RESPONSIBLE FOR ALL POWER REQUIREMENTS NECESSARY FOR A COMPLETE INSTALLATION FROM THE POWER SOURCE TO ALL ATC RELATED CONNECTIONS.
3. THE ATC CONTRACTOR SHALL COORDINATE AND VERIFY THAT ALL CONTROLLERS, DEVICES AND ACCESSORIES ARE PROVIDED AS REQUIRED TO ACCOMPLISH ALL CONTROL FUNCTIONS AND SEQUENCES INDICATED IN THE CONTRACT DOCUMENTS. WHERE CONTROL RELATED DEVICES ARE NOT PROVIDED BY AN EQUIPMENT MANUFACTURER, IT SHALL BE THE RESPONSIBILITY OF THE ATC CONTRACTOR TO PROVIDE THE CONTROL DEVICES REQUIRED TO ACCOMPLISH THE FUNCTIONS AND SEQUENCES INDICATED.
4. THE ATC CONTRACTOR SHALL PROVIDE ALL CONTROLLERS, DEVICES, POINTS, ETC REQUIRED TO ACCOMPLISH THE CONTROL SEQUENCES AND FUNCTIONS INDICATED ON THE DRAWINGS AND IN THE SPECIFICATIONS. ALL POINTS SHALL BE TIED INTO THE ENGINEERING CONTROL CENTER (ECC). IN ADDITION, THE ATC CONTRACTOR SHALL PROVIDE ALL CONTROLLERS, DEVICES, POINTS, ETC REQUIRED TO CONTROL, OPERATE AND MONITOR ALL EQUIPMENT (IE, AIR HANDLING UNITS, TERMINAL UNITS, AIR VOLUME TERMINALS, FANS, HUMIDIFIERS, VALVES, DAMPERS, SENSORS, ETC.) INDICATED THROUGHOUT THE CONTRACT DOCUMENTS.
5. PROVIDE EQUIPMENT STATUS FOR ALL MECHANICAL AND PLUMBING EQUIPMENT. EQUIPMENT FAILURES SHALL BE ALARMED AT THE ECC. PROVIDE END SWITCHES FOR ALL MOTOR OPERATED DAMPERS. END SWITCHES SHALL BE INTERFACED WITH THE ECC.
6. PROVIDE CURRENT SENSING RELAYS FOR ALL MECHANICAL EQUIPMENT AS REQUIRED TO PROVIDE EQUIPMENT STATUS. EQUIPMENT STATUS SHALL BE INDICATED AS THE ECC.
7. PROVIDE TEMPERATURE SENSORS TIED INTO THE ECC AT THE INLET AND OUTLET OF ALL AIR HANDLING UNITS, ETC, IN ADDITION, PROVIDE TEMPERATURE SENSOR IN SUPPLY DUCTWORK DOWNSTREAM OF ALL VAV TERMINALS WITH REHEAT COILS .
8. GENERAL EXHAUST FANS SHALL BE PROVIDED WITH MOTOR OPERATED DAMPERS. UNLESS OTHERWISE NOTED, DAMPERS SHALL OPEN WHEN FAN IS ENERGIZED AND CLOSED WHEN FAN IS DE-ENERGIZED.
9. ALL SAFETIES FOR AIR HANDLING EQUIPMENT (FREEZESTATS, SMOKE DETECTORS, PRESSURE SWITCHES, ETC.) SHALL BE HARDWIRED TO THE FAN STARTER .
10. WATER PRESSURE DROP THROUGH ATC CONTROL VALVES SHALL NOT EXCEED 10 FT. HEAD. TWO-POSITION ATC VALVES UTILIZED FOR ISOLATION, BY-PASS OR SHUT-OFF PURPOSES SHALL BE FULL LINE SIZE.
11. ALL ATC DEMOLITION SHALL BE PERFORMED BY THE ATC CONTRACTOR ONLY. ALL EXISTING PNEUMATICALLY CONTROLLED EQUIPMENT THAT IS NOT REMOVED UNDER THIS PROJECT SHALL REMAIN IN OPERATION. ALL PNEUMATIC PIPING, EQUIPMENT, ETC. NOT REQUIRED TO BE IN SERVICE AT THE COMPLETION OF THIS PROJECT, SHALL BE REMOVED BY THE ATC CONTRACTOR.
12. FOR AIR HANDLING EQUIPMENT (IE. AIR HANDLING UNITS, FAN COIL UNITS, ETC.) INSTALLED ABOVE A CEILING, PROVIDE A SECONDARY DRAIN PAN WITH LEAK DETECTION. LEAK DETECTION SHALL ALARM AT THE ENGINEERING CONTROL CENTER (ECC) AND SHALL DE-ENERGIZE THE UNIT.

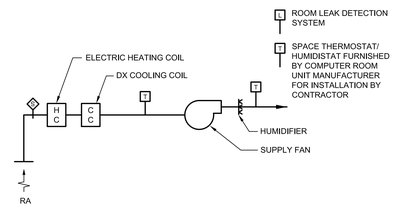

CRU-1 CONTROL (DX WITH ELECTRIC HEAT)

MC025

1. GENERAL

1.1 UNIT FAN SHALL RUN CONTINUOUSLY.

1.2 REMOTE MICROPROCESSOR SHALL CONTROL THE UNIT TO MAINTAIN 72°F AND 50% RM (ADJUSTABLE).

1.3 EXTEND ALARM SIGNAL TO ECC TO ALERT TROUBLE WITH FACTORY RESET ALARM.

1.4 WHEN ACTIVATED, LEAK DETECTION SENSOR SHALL SIGNAL FOR FAN AND COOLING TO BE SHUT DOWN AND ENERGIZE LOCAL ALARM.

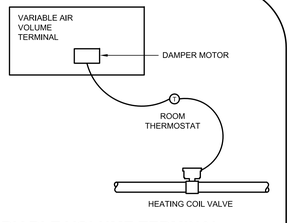

VARIABLE VOLUME TERMINAL BOX W/REHEAT CONTROL

MC009

1. ON A FALL IN TEMPERATURE, SPACE THERMOSTAT SHALL MODULATE VAV TERMINAL DAMPER TOWARD MINIMUM SETTING.
2. ON A CONTINUED FALL IN TEMPERATURE, SPACE THERMOSTAT SHALL MODULATE HEATING COIL VALVE TO MAINTAIN SETPOINT.
3. ON A RISE IN TEMPERATURE THE OPPOSITE SHALL OCCUR .

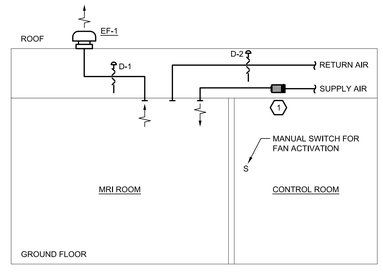

EXHAUST FAN CONTROL AND OXYGEN MONITORING SYSTEM

1. UPON ACTIVATION OF MANUAL SWITCH, THE FOLLOWING SHALL OCCUR UNTIL MANUALLY RESET.
   - A. AN ALARM SHALL BE SENT TO THE CAMPUS ECC AND MOTORIZED CONTROL DAMPER D-1 SHALL BE INDEXED TO FULLY OPEN.
   - B. SUPPLY AIR TERMINAL UNIT SHALL BE INDEXED TO MAXIMUM AIR FLOW AND MOTORIZED CONTROL DAMPER D-2 SHALL BE INDEXED TO FULLY CLOSED.
   - C. EMERGENCY EXHAUST FAN EF-1 SHALL BE ENERGIZED AND SHALL RAN CONTINUOUSLY.

Additions: Date:

Revisions:

Consultants

BURDETTE KOEHLER MURPHY & ASSOCIATES, INC.
MECHANICAL / ELECTRICAL CONSULTING ENGINEERING
1416 CLARKVIEW ROAD
BALTIMORE, MARYLAND 21209
410.323.0600 – FAX 410.377.2543

RICKERT ENGINEERING, Inc.
STRUCTURAL ENGINEERING
8813 WALTHAM WOODS ROAD, SUITE 301
BALTIMORE, MARYLAND 21234
410.663.5110 – FAX 410.663.5114

BUILDING COST CONSULTANTS
COST ESTIMATING
12917 – 307H AVENUE
PLATTSMOUTH, NEBRASKA 68048
402.298.8260 – FAX 402.298.8290

Seal:

ARCHITECTURE PLANNING ENGINEERING
POLT DESIGN GROUP
2215 CONOWINGO RD. 410.803.2141
Bel Air, Maryland 21015-1436 fax 410.836.6611
www.polt-design.com

Drawing Scale:
Drawing Start Date:
Drawing Finish Date:
Drawing Approved:

Drawing Title: AUTOMATIC TEMPERATURE CONTROLS
Approved: Associate Director for Operations:
Approved: Chief, Facilites Engineer:
Approved: Director, Medical Center:

Project Title: MRI SITE PREPERATION
Building No: 361
Checked: MAF
Drawn: CSR
Location: VAMHCS MEDICAL CENTER PERRY POINT, MD

Date: 06/30/14
Project No: 512-09-315
DRAWING NO: M601
Dwg. 14 Of 29

DEPARTMENT OF VETERANS AFFAIRS

BKM# 060310.090

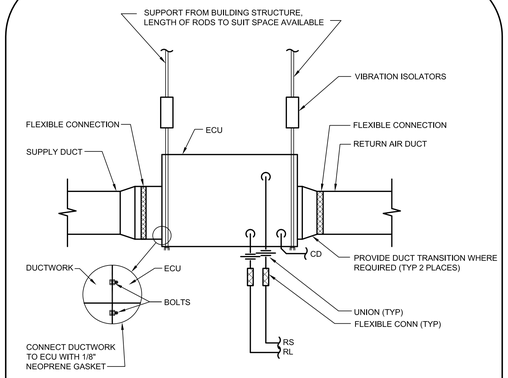

1 HORIZONTAL ECU CONNECTION DETAIL

NO SCALE

MDD119

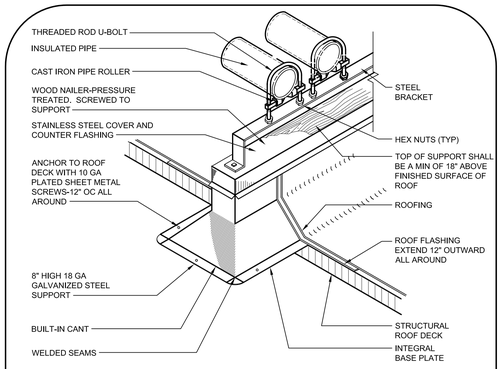

2 ROOF PIPING SUPPORT DETAIL

NO SCALE

MDD102

NOTES:
1. SUPPORTS SHALL REST ON STRUCTURAL ROOF DECK. PROVIDE RAISED CANT AND CUT EXISTING ROOF INSULATION AS REQUIRED.
2. REFER TO ARCHITECTURAL CONSTRUCTION DOCUMENTS FOR ROOF CONSTRUCTION AND DETAILS OF ALL REQUIRED ROOF WORK INCLUDING BUT NOT LIMITED TO FLASHING AND COUNTER FLASHING OF CURBS, PENETRATIONS, ETC.

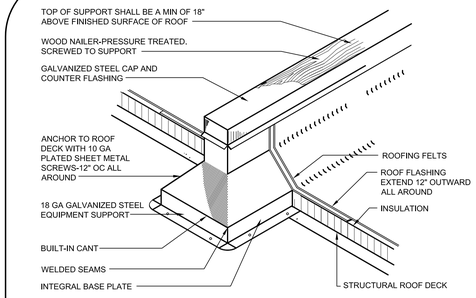

3 ROOF EQUIPMENT SUPPORT DETAIL

NO SCALE

MDD101A

NOTES:
1. SUPPORTS SHALL REST ON STRUCTURAL ROOF DECK. PROVIDE RAISED CANT AND CUT EXISTING ROOF INSULATION AS REQUIRED.
2. EXTEND SUPPORTS AT LEAST 6 INCHES BEYOND UNIT ON EACH SIDE
3. WHERE APPLICABLE, DUCTWORK SHALL BE INSTALLED SUCH THAT THE CENTERLINE OF THE DUCT AND THE INLET OF THE ASSOCIATED FAN ARE AT THE SAME ELEVATION. DUCTWORK SHALL BE A MINIMUM OF 18" ABOVE FINISHED SURFACE OF ROOF. TO ALLOW FOR ROOF MAINTENANCE.
4. PROVIDE ROOF SUPPORTS FOR DUCTWORK AT SIX FEET O.C.

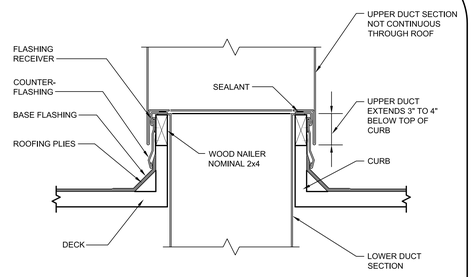

4 DUCT PENETRATION OF ROOF DETAIL

NO SCALE

MDD100

NOTE: REFER TO ARCHITECTURAL CONSTRUCTION DOCUMENTS FOR ROOF CONSTRUCTION AND DETAILS OF ALL REQUIRED ROOF WORK INCLUDING BUT NOT LIMITED TO FLASHING AND COUNTER FLASHING OF CURBS, PENETRATIONS, ETC.

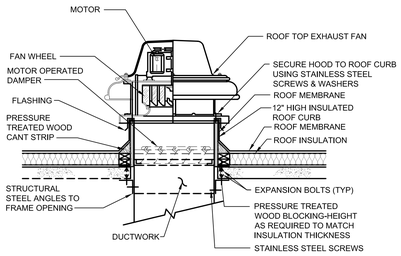

5 ROOF EXHAUST FAN DETAIL

NO SCALE

MDD092

NOTES:
1. CURBS AND FANS SHALL BE FROM SAME MANUFACTURER.
2. REFER TO ARCHITECTURAL CONSTRUCTION DOCUMENTS FOR ROOF CONSTRUCTION AND DETAILS OF ALL REQUIRED ROOF WORK INCLUDING BUT NOT LIMITED TO FLASHING AND COUNTER FLASHING OF CURBS, PENETRATIONS, ETC.

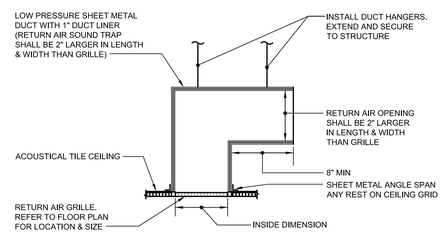

6 RETURN AIR GRILLE DETAIL

NO SCALE

MDD039

NOTES:
1. PROVIDE FOR ALL RETURN AIR GRILLES THROUGHOUT.
2. PAINT INSIDE BLACK .
3. REFER TO PLANS FOR ADDITIONAL DUCTWORK .

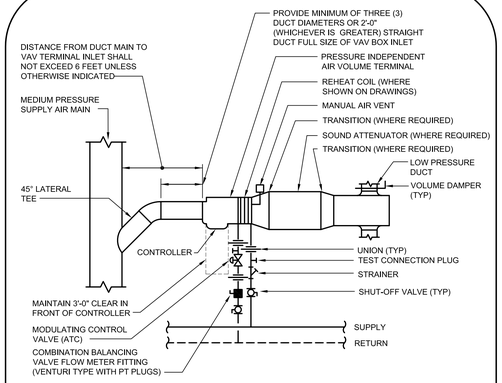

7 SUPPLY VARIABLE AIR VOLUME TERMINAL DETAIL

NO SCALE

MDD037

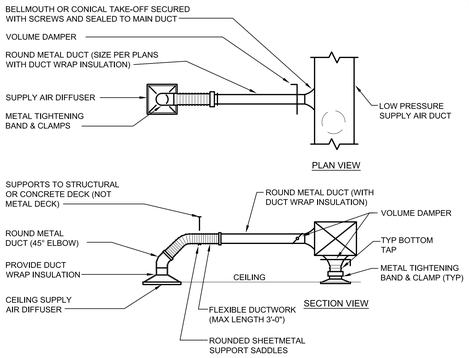

8 ROUND NECK DIFFUSER DETAIL

NO SCALE

MDD033

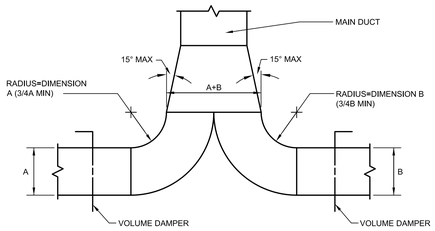

9 RADIUS ELBOW DUCT TEE DETAIL

NO SCALE

MDD031

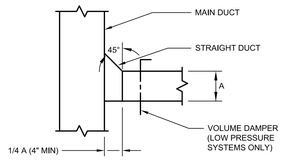

MINOR DUCT BRANCH DETAIL

NO SCALE

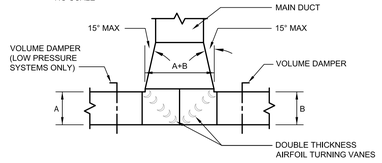

10 RECTANGULAR ELBOW DUCT TEE

NO SCALE

MDD030

NOTE: THIS DETAIL APPLIES TO BOTH ELBOWS & TEES IN VERTICAL AND HORIZONTAL APPLICATIONS.

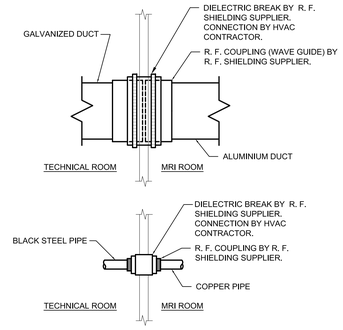

11 R. F. COUPLING CONNECTION DETAIL

NO SCALE

MDD027

NOTE:
PROVIDE DUCT TRANSITION AT INLET AND OUTLET OF NOTE: R. F. COUPLING (WAVE GUIDE) AS REQUIRED.

Additions:	Date:
Revisions:	

Consultants

BURDETTE KOEHLER MURPHY & ASSOCIATES, INC.
MECHANICAL / ELECTRICAL CONSULTING ENGINEERING
1416 CLARKVIEW ROAD
BALTIMORE, MARYLAND 21209
410.323.0600 – FAX 410.377.2543

RICKERT ENGINEERING, Inc.
STRUCTURAL ENGINEERING
8813 WALTHAM WOODS ROAD, SUITE 301
BALTIMORE, MARYLAND 21234
410.663.5110 – FAX 410.663.5114

BUILDING COST CONSULTANTS
COST ESTIMATING
12917 – 30TH AVENUE
PLATTSMOUTH, NEBRASKA 68048
402.298.8260 – FAX 402.298.8290

Seal:

ARCHITECTURE
PLANNING
ENGINEERING

POLT DESIGN GROUP
2215 CONOWINGO RD.
Bel Air, Maryland 21015-1436
410.803.2141
fax 410.836.6611
www.polt-design.com

Drawing Scale:

Drawing Start Date:

Drawing Finish Date:

Drawing Approved:

Drawing Title: MECHANICAL DETAILS

Approved: Associate Director for Operations:

Approved: Chief, Facilites Engineer:

Approved: Director, Medical Center:

Project Title: MRI SITE PREPERATION

Building No: 361

Checked: MAF

Drawn: CSR

Location: VAMHCS MEDICAL CENTER PERRY POINT, MD

Date: 06/30/14

Project No: 512-09-315

DRAWING NO: M701

Dwg. 15 Of 29

DEPARTMENT OF VETERANS AFFAIRS

BKM# 060310.090

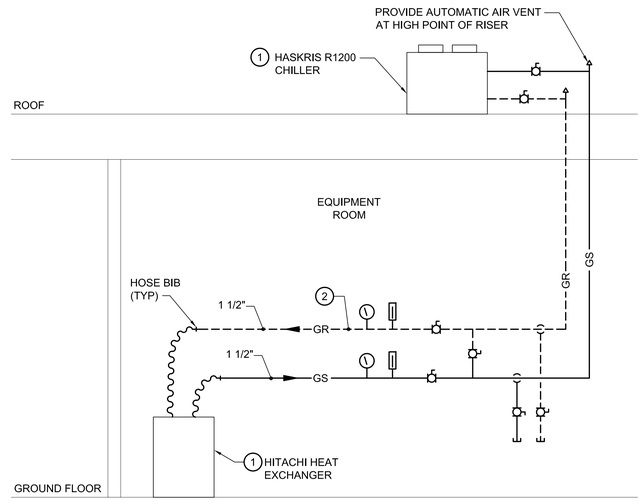

1 MRI COOLING EQUIPMENT SCHEMATIC DIAGRAM

NO SCALE

NOTES:

1. EQUIPMENT PROVIDED BY MRI EQUIPMENT MANUFACTURER.
2. PROVIDE BLUE-WHITE SERIES F-420N VARIABLE AREA FLOW METER.

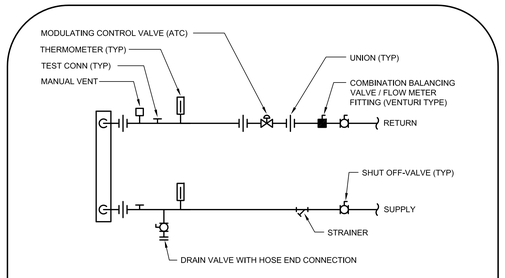

2 HEATING WATER COIL PIPING DETAIL

NO SCALE

M000005

NOTES:

1. COORDINATE INSTALLATION OF PIPING TO ALLOW FOR FULL SWING OF ACCESS DOORS, ALONG WITH SERVICING OF FILTERS, VALVES, ETC.
2. WHERE MULTIPLE COILS OCCUR, PROVIDE THE FOLLOWING AT EACH COIL CONNECTION OF A MULTIPLE COIL ARRANGEMENT:
   a. SHUT-OFF VALVE AND TEST PORT IN SUPPLY PIPE.
   b. BALANCING VALVE AND TEST PORT IN RETURN PIPE.
3. WHERE FLOW METER FITTINGS ARE NOT AVAILABLE INTEGRAL WITH BALANCING VALVE, PROVIDE SEPARATE FLOW METER FITTINGS.

Additions: *Date:*

Revisions:

Consultants

BURDETTE KOEHLER MURPHY & ASSOCIATES, INC.
MECHANICAL / ELECTRICAL CONSULTING ENGINEERING
1416 CLARKVIEW ROAD
BALTIMORE, MARYLAND 21209
410.323.0600 – FAX 410.377.2543

RICKERT ENGINEERING, Inc.
STRUCTURAL ENGINEERING
8813 WALTHAM WOODS ROAD, SUITE 301
BALTIMORE, MARYLAND 21234
410.663.5110 – FAX 410.663.5114

BUILDING COST CONSULTANTS
COST ESTIMATING
12917 – 307H AVENUE
PLATTSMOUTH, NEBRASKA 68048
402.298.8260 – FAX 402.298.8290

Seal:

ARCHITECTURE
PLANNING
ENGINEERING

POLT DESIGN GROUP

2215 CONOWINGO RD. 410.803.2141
Bel Air, Maryland 21015-1436 fax 410.836.6611
www.polt-design.com

Drawing Scale:	Drawing Title: MECHANICAL DETAILS	Project Title: MRI SITE PREPERATION	Date: 06/30/14
Drawing Start Date:	Approved: Associate Director for Operations:		Project No: 512-09-315
Drawing Finish Date:	Approved: Chief, Facilites Engineer:	Building No: 361 / Checked: MAF / Drawn: CSR	DRAWING NO: M702
Drawing Approved:	Approved: Director, Medical Center:	Location: VAMHCS MEDICAL CENTER PERRY POINT, MD	Dwg. 16 Of 29

DEPARTMENT OF VETERANS AFFAIRS

BKM# 060310.090

DUCT CONSTRUCTION SCHEDULE

SYSTEM	DUCT PRESSURE CLASS (IN WC)	DUCT SEAL CLASS	TEST PRESSURE (NOTE 4)	MAXIMUM ALLOWABLE LEAKAGE	NOTES
HIGH PRESSURE SUPPLY (AHU DISCHARGE TO AIR TERMINALS)	4"	A	4"	1 %	1, 2 & 3
LOW PRESSURE SUPPLY (DOWNSTREAM OF AIR TERMINALS)	2"	A	2"	1 %	1, 2 & 3
LOW PRESSURE RETURN	2"	A	2"	1 %	1, 2 & 3
LOW PRESSURE EXHAUST	2"	A	2"	1 %	1, 2 & 3

NOTES:
1. SEE SPECIFICATIONS FOR ADDITIONAL DUCTWORK REQUIREMENTS AS WELL AS DETAILED PRODUCT AND INSTALLATION REQUIREMENTS, WHERE DRAWINGS AND SPECIFICATIONS CONFLICT, THE MORE STRINGENT REQUIREMENT SHALL APPLY.
2. SUCCESSFUL COMPLETION OF DUCT PRESSURE TESTING SHALL OCCUR PRIOR TO THE INSTALLATION OF INSULATION. VERIFICATION OF SUCCESSFUL PRESSURE TEST RESULTS SHALL BE SUBMITTED TO THE A/E AND INCLUDED IN THE PROJECT O & M MANUALS.
3. DUCT SEAL CLASS SHALL BE AS PER THE MOST CURRENT EDITION OF SMACNA STANDARDS.
4. TEST PRESSURE SHALL BE 125% OF SYSTEM OPERATING PRESSURE, BUT NOT LESS THAN THE PRESSURE INDICATED.

AIR VOLUME TERMINAL WITH HOT WATER REHEAT SCHEDULE

DESIG	MAXIMUM CFM	MINIMUM CFM	HEATING CFM	MINIMUM OA CFM	MINIMUM INLET SIZE (IN) (2)	OUTLET SIZE (3) (IN x IN)	MAXIMUM APD (IN) (4)	MAXIMUM NC (5)	INLET SP (IN)	MINIMUM SOUND ATTENUATOR SIZE (IN x IN x IN) (6)	HEATING CAPACITY								
											CFM	EAT (°F)	LAT (°F)	MIN BTUH	EWT (°F)	LWT (°F)	MAX GPM	PIPE SIZE	REMARKS
1	780	780	780	27	8	-	0.60	35	1.50	-	780	55	90	29,500	180	160	3.0	3/4"	-
2	630	275	630	54	8	-	0.60	35	1.50	-	630	55	90	13,600	180	160	1.0	3/4"	-
3	325	225	225	45	6	-	0.60	35	1.50	-	225	55	90	4,860	180	160	1.0	3/4"	-

NOTES:

1. AIR VOLUME TERMINALS SHALL BE PRESSURE INDEPENDENT TYPE.
2. PROVIDE MINIMUM OF THREE (3) DUCT DIAMETERS OR TWO (2) FEET (WHICHEVER IS GREATER) OF STRAIGHT SHEET METAL DUCT AT TERMINAL UNIT INLET. MEDIUM PRESSURE FLEXIBLE DUCTWORK WILL NOT BE PERMITTED.
3. WHERE OUTLET SIZE IS INDICATED OTHERWISE ON HVAC PLANS, PROVIDE DUCT TRANSITION AS REQUIRED. WHERE SOUND ATTENUATORS ARE REQUIRED, PROVIDE TRANSITION FROM TERMINAL OUTLET TO SOUND ATTENUATOR AND FROM SOUND ATTENUATOR TO DUCT SIZE INDICATED ON PLANS.
4. MAX. APD SHALL BE FOR AIR VOLUME TERMINAL PLUS HEATING COIL AND SOUND ATTENUATOR.
5. MAXIMUM NOISE CRITERIA (NC) LEVELS FOR DISCHARGE AND RADIATED SOUND SHALL NOT BE EXCEEDED IN ANY OF THE 2ND THROUGH 7TH OCTAVE BANDS AT THE SCHEDULED INLET STATIC PRESSURE. STANDARD CATALOGUED ATTENUATION CREDITS SHALL NOT BE USED. SEE SPECIFICATIONS FOR ALLOWABLE SOUND ADJUSTMENT FACTORS. PROVIDE SOUND ATTENUATORS AS REQUIRED TO MEET NC VALUES INDICATED.
6. PROVIDE WHERE REQUIRED TO MEET NC VALUES SCHEDULED. SOUND ATTENUATOR PRESSURE DROP SHALL NOT EXCEED 0.15 IN WC. PROVIDE 'PACK-LESS' TYPE SOUND ATTENUATORS.
7. AIR VOLUME TERMINALS SHALL BE PROVIDED WITH AN INNER LINER (EQUIVALENT TO TITUS STERI-LOC) SUCH THAT NO FIBERGLASS LINING WILL BE EXPOSED TO THE AIRSTREAM.

FAN SCHEDULE

FAN NO	LOCATION	AREA SERVED	CFM	ESP (IN)	MOTOR				FAN RPM	FAN DIA	WHEEL TYPE	CLASS	DRIVE TYPE	MANUFACTURER / MODEL
					HP	MAX BHP	VOLTS	PHASE						
EF-1	ROOF	MRI ROOM EMERGENCY EXHAUST	1800	1.0	3/4	0.57	460	3	1658	13	BI	I	BELT	GREENHECK GB-131-7 (NOTE 1)

NOTES:

1. PROVIDE FAN WITH INTEGRAL DISCONNECT SWITCH .

ENVIRONMENTAL CONTROL UNIT SCHEDULE

EVAPORATOR SECTION										CONDENSING UNIT					
UNIT	NET CAPACITY (72° F DB / 50% RH)		CFM	FAN HP	ESP (IN)	REHEAT CAPACITY (KW)	STEAM GENERATOR TYPE HUMIDIFIER (LBS / HR)	VOLTS / PHASE	MANUFACTURER / MODEL	UNIT	CFM @ 95°F AMBIENT	ESP (IN)	MOTOR HP	VOLTS / PHASE	MANUFACTURER / MODEL
	SENS MBH	TOTAL MBH													
AC-1	61.2	51.3	2,500	1.5	0.5	11.5	8.0	460/3	LIEBERT MINIMATE2 5-TON	ACCU-1	45,200	-	1/2	460 / 3	LIEBERT PFH 067A

NOTES:

1. PROVIDE ENVIRONMENTAL CONTROL UNIT WITH FACTORY-PROVIDED DISCONNECT SWITCH, SMOKE DETECTOR, FILTER, ELECTRIC REHEAT COIL, AND HUMIDIFER.
2. PROVIDE CONDENSING UNIT WITH FACTORY-PROVIDED DISCONNECT SWITCH AND HIGH AMBIENT OPTION.

AIR DEVICE SCHEDULE

DESIG	DUTY	SIZE (IN)	CFM RANGE	INLET/ NECK SIZE (IN)	MAX SP	MAX NC	DESCRIPTION	MANUFACTURER / MODEL
A	SUPPLY	24 x 24 MODULE	0 - 120	6"Ø	0.10"	20	(18 x 18 NECK W/ FACTORY MOUNTED SQUARE - ROUND TRANSITION)	TITUS TDC
A	SUPPLY	24 x 24 MODULE	121 - 210	8"Ø	0.10"	20	(18 x 18 NECK W/ FACTORY MOUNTED SQUARE - ROUND TRANSITION)	TITUS TDC
A	SUPPLY	24 x 24 MODULE	211 - 325	10"Ø	0.10"	20	(18 x 18 NECK W/ FACTORY MOUNTED SQUARE - ROUND TRANSITION)	TITUS TDC
A	SUPPLY	24 x 24 MODULE	700 - 850	16"Ø	0.10"	25	(18 x 18 NECK W/ FACTORY MOUNTED SQUARE - ROUND TRANSITION)	TITUS TDC
B	RETURN / EXHAUST	10 x 10	0 - 295	10 x 10	0.06"	20	FIXED LOUVER. 35° DEFLECTION 3/4" SPACING - REGISTER	TITUS 350 RL / FL
B	RETURN / EXHAUST	14 x 14	441 - 610	14 x 14	0.06"	20	FIXED LOUVER. 35° DEFLECTION 3/4" SPACING - REGISTER	TITUS 350 RL / FL
B	RETURN / EXHAUST	22 x 22	1200 - 1800	22 x 22	0.06"	20	FIXED LOUVER. 35° DEFLECTION 3/4" SPACING - REGISTER	TITUS 350 RL / FL
C	RETURN / EXHAUST	24 x 48 MODULE	0 - 2500	24 x 48	0.10"	30	FIXED LOUVER. 35° DEFLECTION 3/4" SPACING - REGISTER	TITUS 350 RL / FL
D	SUPPLY	24 x 24 MODULE	0 - 195	7"Ø	0.10"	25	(18 x 18 NECK W/ FACTORY MOUNTED SQUARE - ROUND TRANSITION)	TITUS TLF-AA

NOTE: MANUFACTURERS MAY PROVIDE STEEL AIR DEVICES UNLESS OTHERWISE INDICATED. ALL AIR DEVICES IN MRI EXAM ROOM SHALL BE ALUMINUM.

HUMIDIFIER SCHEDULE

DESIG	SERVICE	CAPACITY (LB/HR)	VOLTS / PHASE	MAX AMPS	MANUFACTURER / MODEL
H-1	MRI EXAM ROOM	20	460/3	8.1	DRISTEEM XT-20

Additions: Date:

Revisions:

Consultants

BURDETTE KOEHLER MURPHY & ASSOCIATES, INC.
MECHANICAL / ELECTRICAL CONSULTING ENGINEERING
1416 CLARKVIEW ROAD
BALTIMORE, MARYLAND 21209
410.323.0600 – FAX 410.377.2543

RICKERT ENGINEERING, Inc.
STRUCTURAL ENGINEERING
8813 WALTHAM WOODS ROAD, SUITE 301
BALTIMORE, MARYLAND 21234
410.663.5110 – FAX 410.663.5114

BUILDING COST CONSULTANTS
COST ESTIMATING
12917 – 30TH AVENUE
PLATTSMOUTH, NEBRASKA 68048
402.298.8260 – FAX 402.298.8290

Seal:

ARCHITECTURE PLANNING ENGINEERING
POLT DESIGN GROUP
2215 CONOWINGO RD. 410.803.2141
Bel Air, Maryland 21015-1436 fax 410.836.6611
www.polt-design.com

Drawing Scale:

Drawing Start Date:

Drawing Finish Date:

Drawing Approved:

Drawing Title: MECHANICAL SCHEDULES

Approved: Associate Director for Operations:

Approved: Chief, Facilites Engineer:

Approved: Director, Medical Center:

Project Title: MRI SITE PREPERATION

Building No: 361

Checked: MAF

Drawn: CSR

Location: VAMHCS MEDICAL CENTER PERRY POINT, MD

Date: 06/30/14

Project No: 512-09-315

DRAWING NO: M801

Dwg. 17 Of 29

DEPARTMENT OF VETERANS AFFAIRS

BKM# 060310.090

ELECTRICAL LEGEND & ABBREVIATIONS

- DRAWING NOTE (APPLIES TO THIS DRAWING ONLY)
- REVISION NUMBER - CLOUDED AREA ON DRAWING CONTAINS REVISION
- UPPER CASE - FIXTURE TYPE (TYPICAL FOR ALL LIGHTING FIXTURES) - SEE LIGHTING FIXTURE SCHEDULE
- LIGHTING FIXTURE; DOWNLIGHT, 2' x 4' & 2' x 2'
- LOWER CASE - INDICATES CONTROLLING SWITCH(ES) (TYPICAL FOR ALL LIGHTING FIXTURES)
- FLUORESCENT LIGHTING FIXTURE, INDUSTRIAL TYPE
- LIGHTING FIXTURE (EMERGENCY CIRCUIT)
- EXIT LIGHT - DARKENED SECTION INDICATES FACE WITH DIRECTIONAL ARROWS AS INDICATED - SEE LIGHTING FIXTURE SCHEDULE
- $ — TOGGLE SWITCH TO BE DEMOLISHED
- S_a — SINGLE POLE TOGGLE SWITCH - SUBSCRIPT INDICATES FIXTURES CONTROLLED BY THE SWITCH (TYPICAL FOR ALL LIGHTING SWITCHES), 48" A.F.F., U.O.N.:
  3 - THREE WAY TOGGLE SWITCH,
  4 - FOUR WAY TOGGLE SWITCH,
  D - DIMMER SWITCH, K - KEY SWITCH,
  P - PILOT LIGHT, T - TIMER,
  O - WALL MTD. OCCUPANCY SENSOR,
  WP - WEATHERPROOF,
  EPO - EMERGENCY POWER OFF
- RACEWAY - 2 #12 + #12 GW IN 3/4" CONDUIT, U.O.N.
- HOMERUN TO PANELBOARD - ARROWS INDICATE NUMBER OF CIRCUITS SLASHES INDICATE CIRCUIT CONDUCTORS NO SLASH INDICATES TWO CIRCUIT CONDUCTORS PROVIDE GROUNDING CONDUCTOR, NOT SHOWN SHARING OF NEUTRALS IS PROHIBITED, U.O.N.
- CONDUIT TURNING UP
- CONDUIT TURNING DOWN
- JUNCTION BOX: CEILING, WALL OR FLUSH-FLOOR MOUNTED
- DUPLEX RECEPTACLE - 2P, 3W, 20A, 125V, NEMA 5-20R IN RECESSED OUTLET BOX, 18" A.F.F., U.O.N.:
  "x" NUMERIC DENOTES MOUNTING HEIGHT.
  WP - WEATHERPROOF,
  GFI - GROUND FAULT CIRCUIT INTERRUPTER,
  GFI, WP - GROUND FAULT CIRCUIT INTERRUPTER WITH WEATHER RESISTANT LISTED DEVICE & WEATHER PROOF IN-USE COVER.
- DUPLEX RECEPTACLE, MOUNTED 6" ABOVE COUNTERTOP BACK SPLASH UNLESS OTHERWISE NOTED
- TWO DUPLEX RECEPTACLES WITH COMMON FACEPLATE 2P, 3W, 20A, 125V, NEMA 5-20R IN RECESSED TWO-GANG OUTLET BOX, 18" A.F.F., U.O.N.
- SPECIAL RECEPTACLE, 18" A.F.F. U.O.N. (TYPE AS NOTED)
- TELEPHONE OUTLET, 18" A.F.F., U.O.N., SUBSCRIPT DENOTES TYPE:
  A - ANALOG
  P - PAY PHONE
- DATA OUTLET, 18" A.F.F., U.O.N.
  F - FIREMAN PHONE
  W - WALL 48" A.F.F.
- SPEAKER, CEILING OR WALL MOUNTED
- PANELBOARD, RECESSED OR SURFACE MOUNTED
- ELECTRICAL MOTOR
- S_M — MOTOR SWITCH WITH THERMAL OVERLOAD
- COMBINATION MAGNETIC MOTOR STARTER WITH MCP OR FUSIBLE DISCONNECT SWITCH
- MAGNETIC MOTOR CONTROLLER/STARTER
- FUSED DISCONNECT SWITCH, UPPER NUMERAL INDICATES SWITCH SIZE, LOWER NUMERAL INDICATES FUSE SIZE
- NONFUSED DISCONNECT SWITCH, NUMERAL INDICATES SIZE
- FIRE ALARM VISUAL DEVICE, SUBSCRIPT DENOTES CANDELA RATING, 80" A.F.F. OR 6" BELOW CEILING, WHICHEVER IS LOWER.
- FIRE ALARM SPEAKER/HORN WITH VISUAL DEVICE, SUBSCRIPT DENOTES CANDELA RATING, 80" A.F.F. OR 6" BELOW CEILING, WHICHEVER IS LOWER.
- FIRE ALARM MANUAL STATION, 48" A.F.F., U.O.N.
- FIRE ALARM HEAT DETECTOR
- SMOKE DETECTOR, DUCT TYPE
- LC — LIGHTING CONTROL POWER PACK, MOUNTED ABOVE CEILING
- S_O — WALL MOUNTED OCCUPANCY SENSOR
- OS — CEILING MOUNTED OCCUPANCY SENSOR

ELECTRICAL ABBREVIATIONS

A	AMPERE
AC	ALTERNATING CURRENT
AFC	ABOVE FINISHED COUNTER
AFF	ABOVE FINISHED FLOOR
AFG	ABOVE FINISHED GRADE
AHU	AIR HANDLING UNIT
AIC	AMPERE INTERRUPTING CAPACITY
ANSI	AMERICAN NAT'L STANDARDS INSTIT.
ASYM	ASYMMETRICAL
ATC	AUTOMATIC TEMPERATURE CONTROL
AWG	AMERICAN WIRE GAUGE
BATT	BATTERY
BLDG	BUILDING
C	CONDUIT
CB	CIRCUIT BREAKER
CKT	CIRCUIT
CLG	CEILING
CT	CURRENT TRANSFORMER
CTR	CENTER
CU	COPPER
CX	CONNECT TO EXISTING
DB	DIRECT BURIAL
DIA	DIAMETER
DN	DOWN
DWG	DRAWING
ECB	ENCLOSED CIRCUIT BREAKER
EF	EXHAUST FAN
ELEC	ELECTRIC / ELECTRICAL
EMER	EMERGENCY
EMT	ELECTRICAL METALLIC TUBING
EQUIP	EQUIPMENT
ETR	EXISTING TO REMAIN
EWC	ELECTRIC WATER COOLER
EX	EXISTING
FA	FIRE ALARM
FAP	FIRE ALARM ANNUNCIATOR PANEL
FACP	FIRE ALARM CONTROL PANEL
FCU	FAN COIL UNIT
FDR	FEEDER
F	FUSED OR FUSIBLE
FLA	FULL LOAD AMPERES
FSS	FUSED SAFETY SWITCH
FVNR	FULL VOLTAGE NON-REVERSING
GFI	GROUND FAULT CIRCUIT INTERRUPTER
GW	GROUND WIRE
GND	GROUND
HOA	HAND-OFF-AUTOMATIC
HMSA	HITACHI MEDICAL SYSTEMS AMERICA, INC
HP	HORSEPOWER
HZ	HERTZ
JB	JUNCTION BOX
KCMIL	THOUSAND CIRCULAR MILS
KVA	KILOVOLT-AMPERE
KW	KILOWATT
LTG	LIGHTING
MCB	MAIN CIRCUIT BREAKER
MCC	MOTOR CONTROL CENTER
MCP	MOTOR CIRCUIT PROTECTOR
MDP	MAIN DISTRIBUTION PANEL
MECH	MECHANICAL
MH	MANHOLE
MLO	MAIN LUGS ONLY
MTD	MOUNTED
MT HT	MOUNTING HEIGHT
NEC	NATIONAL ELECTRICAL CODE
NEMA	NATIONAL ELECTRICAL MANUF. ASSOC.
NF	NON-FUSED
NFSS	NON-FUSED SAFETY SWITCH
NIC	NOT IN CONTRACT
NTS	NOT TO SCALE
PH or Ø	PHASE
P	POLE
PB	PUSH BUTTON
PNL	PANEL
PVC	POLYVINYL CHLORIDE
RM	ROOM
RX	REMOVE EXISTING
SW	SWITCH
SCHED	SCHEDULE
SD	SMOKE DAMPER
SEC	SECONDARY
SFA	SPRINKLER FLOW ALARM
SS	SAFETY SWITCH
SYM	SYMMETRICAL
TEL	TELEPHONE
TTB	TELEPHONE TERMINAL BOARD
TYP	TYPICAL
UG	UNDERGROUND
UH	UNIT HEATER
UON	UNLESS OTHERWISE NOTED
UPS	UNINTERUPTIBLE POWER SYSTEM
V	VOLT
VPS	VALVE POSITION (TAMPER) SWITCH
W	WIRE
WP	WEATHERPROOF
XFMR	TRANSFORMER

LIGHTING FIXTURE SCHEDULE

TYPE	DESCRIPTION	LENS/ LOUVER	MOUNTING	VOLTS	LAMP DATA NO.	LAMP DATA WATTS	LAMP DATA CODE	MANUFACTURER & CATALOG NO.	NOTES
A	2' x 2' LED LIGHTING FIXTURE LOW WATTAGE	ACRYLIC	CR	120/277	-	30	LED	COLUMBIA #LLT22-40LWG-FAA12F-EU	
A1	SAME AS TYPE "A" EXCEPT 0-10V DIMMING DRIVER.	ACRYLIC	CR	120/277	-	30	LED	COLUMBIA #LLT22-40LWG-FAA12F-EDU	
A2	SAME AS TYPE "A" EXCEPT MEDIUM LUMEN.	ACRYLIC	CR	120/277	-	30	LED	COLUMBIA #LLT22-40LMG-FAA12F-EU	
A3	SAME AS TYPE "A" EXCEPT HIGH LUMEN.	ACRYLIC	CR	120/277	-	36	LED	COLUMBIA #LLT22-40HLG-FAA12F-EU	
B	4" LED DOWNLIGHT NON-FERROUS CONSTRUCTION WITH 0-10V DIMMING CONTROL.	-	CR	120	-	50	LED	EVERBRITE LIGHTING #XLS3.0-35-120RWM	
C	2' FLUORESCENT LIGHTING FIXTURE WITH ELECTRONIC BALLAST.	ACRYLIC	WS	120/277	2	17	F17 T8	COLUMBIA #WPM2-217-EU	
⊠	L.E.D. EXIT SIGN.	N/A	N/A	120/277	-	5	LED	DUAL LIGHT #EVEUGWI	1

MOUNTING: CS - CEILING, SURFACE; CR – CEILING, RECESSED, ACT; CC# - CEILING, SUSPENDED, # FEET A.F.F.; CG – CEILING, RECESSED, GYPSUM BD.; WS# - WALL MTD., SURFACE, # FEET A.F.F.; WR# - WALL, RECESSED, # FEET A.F.F.

LIGHTING FIXTURE NOTES:

1. PROVIDE MOUNTING TYPES, DIRECTIONAL ARROWS AND FACE QUANTITIES (SINGLE / DOUBLE) AS INDICATED ON DRAWING, COORDINATE HOUSING COLOR OF THE EXIT SIGN WITH ARCHITECT.

GENERAL ELECTRICAL NOTES:

1. ELECTRICAL CONTRACTOR SHALL PROVIDE BRANCH CIRCUIT WIRING FROM MRI PANEL TO RFIP CABINET AS SHOWN ON ONE LINE DIAGRAM. PIGTAIL SHALL BE LONG ENOUGH TO ALLOW RFIP TO BE MOVED 6' PLUS AN ADDITIONAL 5' FOR USE INTENALTO THE CABINET IS REQUIRED. 2" FLEXIBLE CONDUIT FROM THE JUNCTION BOX TO THE CABINET WITH A ELECTRICAL UNION AT ONE END IS ALSO REQUIRED.
2. ELECTRICAL CONTRACTOR SHALL INSTALL CRIMP TERMINAL LUGS ON POWER WIRING TO RFIP CABINET. SIZE AS APPROPRIATE FOR WIRE GAUGE AND MOUNTING TO 3/8" ATTACHMENT STUD IN RFIP CABINET.
3. 120V RECEPTACLES WITH ISOLATED GROUND TERMINALS SHALL BE PROVIDED IN MRI SCAN, CONTROL, AND EQUIPMENT ROOMS.
4. ELECTRICAL CONTRACTOR SHALL PROVIDE RF SHIELD GROUNDING WITH AN INSULATED #4 AWG COPPER GROUNDING CONDUCTOR FROM RF SHIELD GROUND STUD TO ISOLATED GROUND BUS IN MRI PANEL.
5. ELECTRICAL CONTRACTOR SHALL PROVIDE 1" x 1/8" FLAT BRAIDED GROUND STRAP FROM FILTER PANEL TO SCAN ROOM WIREWAY AND BONDING BETWEEN WIREWAY SECTIONS IN SCAN ROOM.
6. CONDUIT AND ENCLOSURE GROUNDING FOR ALL FEEDER AND BRANCH WIRING PER NEC REQUIREMENTS SHALL BE PROVIDED.
7. THE USE OF STANDARD FERROUS RIGID CONDUIT AND WORK BOXES WITHIN SCAN ROOM IS ACCEPTABLE. WHIPS TO AND BETWEEN LIGHT FIXTURES WITHIN THE SCAN ROOM SHALL BE FLEXIBLE (ELECTRICAL NON-METALIC TUBING). THE ELECTRICAL CONTRACTOR IS RESPONSIBLE FOR SECURING ALL CONDUITS INCLUDING FLEXIBLE WHIPS TO PREVENT CONTACT WITH OTHER METALLIC ITEMS (METAL STUDS, CEILING GRID, RF SHIELD) OR MOVEMENT CAUSED BY PULSATION OF MAGNETIC FIELD.
8. EMI FILTERS AT EACH LOCATION WHERE AN ELECTRICAL FEED PASSES THROUGH THE RF SHIELDING SHALL BE PROVIDED BY SHIELDING VENDOR. LOCATION AND NUMBER OF THESE FILTERS MUST BE COORDINATED BETWEEN ELECTRICAL CONTRACTOR AND SHIELDING VENDOR.
9. ALL FEEDER AND BRANCH CIRCUIT CONDUCTORS SHALL BE INSTALLED IN STEEL CONDUIT AND BOXES TO SHIELD CONDUCTORS FROM MAGNETIC INTERFERENCE. ALL CONDUITS SHALL BE SECURED IN SUCH A MANNER AS TO PREVENT POTENTIAL MOVEMENT AND ENSURE PROPER GROUNDING.
10. METALLIC CONDUIT AND BOXES SHALL BE BONDED TOGETHER BY MEANS OF APPROVED CONNECTORS INSTALLED IN ACCORDANCE WITH NEC REQUIREMENTS WITH BONDING JUMPERS WHERE NECESSARY TO PROVIDE A CONDUCTIVE GROUNDING PATH FROM EACH OUTLET BACK TO MAIN SYSTEM GROUND AT ELECTRICAL SERVICE.
11. GROUNDED METALLIC RACEWAY SYSTEM SHALL BE ISOLATED FROM THE RFIP CABINET AND OTHER SYSTEM COMPONENTS AS WELL AS EMI FILTERS BY COUPLING WITH DIELECTRIC CONNECTORS OR NON-METALLIC CONDUIT. THE GROUNDING OF EQUIPMENT ISOLATED FROM METALLIC RACEWAY SYSTEM SHALL BE BY MEANS OF ISOLATED GROUND CONDUCTOR.
12. RF SHIELD GROUNDING SHALL BE PROVIDED BY INSTALLATION OF AN INSULATED #4 AWG COPPER CONDUCTOR RUN FROM RF ROOM GROUND STUD TO THE ISOLATED GROUND BUS IN THE MRI PANEL. GROUNDING OF THE BUS IN FILTER PANEL TO RFIP CABINET WILL BE PROVIDED BY HMSA.
13. THE WIREWAYS FOR THE SYSTEM MUST BE METALLIC AND PROVIDE FOR RF SEPARATION OF THE CABLES. WOOD AND PVC WIREWAYS ARE NOT ACCEPTABLE. NON-FERROMAGNETIC (ALUMINUM OR STAINLESS STEEL) WIREWAYS MUST BE USED IN THE SCAN ROOM.
14. THE WIREWAY MUST PROVIDE FOUR (4) INDIVIDUAL COMPARTMENTS. THIS SHALL BE ACCOMPLISHED USING A SINGLE 7" x 24" DUCT WITH THREE (3) DIVIDERS. THE DIVIDERS MUST BE CAPABLE OF SUPPORTING FOUR POUNDS PER LINEAR FOOT. AT THE DIRECTION OF THE HMSA INSTALLER, THE ELECTRICAL CONTRACTOR IS RESPONSIBLE FOR CUTTING OUT DIVIDERS OR DUCTS FOR ALL CABLE TRANSITION AREAS. ELECTRICAL CONTRACTOR SHALL ALSO PROVIDE GROMMET MATERIAL FOR ALL OPENINGS CUT IN WIREWAY.
15. WIREWAY MUST HAVE A REMOVABLE COVER. THE DIVIDERS MUST MAKE CONTACT WITH THE COVER TO FORM RF TIGHT COMPARTMENTS. SCREWS USED TO SECURE COVER MUST BE AS SHORT AS POSSIBLE AND SELF TAPPING SCREWS ARE NOT ALLOWED. CAUTION MUST BE USED WHEN SECURING COVERS TO ENSURE SCREWS DO NOT PENETRATE CABLES, WATER LINES OR HELUM LINES.
16. ALL WIREWAYS MUST BE BONDED TO THE RF SHIELD. A FLAT GROUND STRAP (MIN. 1") TO THE HMSA FILTER PANEL MUST ALSO BE PROVIDED.
17. AN ON-FLOOR WIREWAY WITH REMOVABLE COVER TO THE REAR OF THE GANTRY IS REQUIRED FOR SYSTEM INTERCONNECT CABLES.
18. A WIREWAY WITH A REMOVABLE COVER AND ONE (1) DIVIDER (MIN. 3 1/2" x 6") IS REQUIRED FROM THE EQUIPMENT ROOM WIREWAY TO THE OPERATOR WORKSTATION LOCATION. MOUNTING HEIGHT MUST BE BETWEEN 3 1/2" A/FF (MIN.) AND 24" A/FF (MAX.).
19. THE ROUGH OPENING FOR THE FILTER PANEL IS BASED ON THE TOP OF THE WIREWAY BEING AT 24" A/FF. COORDINATE ROUGH OPENING LOCATION BETWEEN RF VENDOR AND WIREWAY MANUFACTURER.
20. A 3" x 6" OVERHEAD CABLE TRAY (WALKER WIREMOLD SPMA-A-6-3S OR EQ.) IS REQUIRED INSIDE THE SCAN ROOM, SUSPENDED 6" OR MORE BELOW THE RF CEILING. 3 1/2" x 6" WIREWAY RUNS FROM THE MCU PANEL, UP THE WALL TO THE CABLE TRAY ABOVE THE CEILING, WHICH TERMINATES ABOVE THE GANTRY BEHIND THE CRYOGEN VENT CONNECTION. THIS OVERHEAD CABLE TRAY MUST FOLLOW THE PATH INDICATED ON THE SITE SPECIFIC LAYOUT TO PREVENT THE MAGNETIC FIELD FROM CAUSING INTERFERENCE. TWO 1 3/4" WAVEGUIDES FOR THE HELIUM LINES ARE ALSO REQUIRED FROM THE EQUIPMENT ROOM TO THE OVERHEAD CABLE TRAY AT THE HEIGHT OF ITS HORIZONTAL RUN TO THE GANTRY.
21. COORDINATE WIREWAY LAYOUT WITH HMSA DRAWINGS.

Additions: | Date:

Revisions:

Consultants

BURDETTE KOEHLER MURPHY & ASSOCIATES, INC.
MECHANICAL / ELECTRICAL CONSULTING ENGINEERING
1416 CLARKVIEW ROAD
BALTIMORE, MARYLAND 21209
410.323.0600 – FAX 410.377.2543

RICKERT ENGINEERING, Inc.
STRUCTURAL ENGINEERING
8813 WALTHAM WOODS ROAD, SUITE 301
BALTIMORE, MARYLAND 21234
410.663.5110 – FAX 410.663.5114

BUILDING COST CONSULTANTS
COST ESTIMATING
12917 – 30TH AVENUE
PLATTSMOUTH, NEBRASKA 68048
402.298.8260 – FAX 402.298.8290

Seal:

ARCHITECTURE PLANNING ENGINEERING
POLT DESIGN GROUP
2215 CONOWINGO RD. 410.803.2141
Bel Air, Maryland 21015-1436 fax 410.836.6611
www.polt-design.com

Drawing Scale:

Drawing Start Date:

Drawing Finish Date:

Drawing Approved:

Drawing Title: ELECTRICAL LEGEND, ABBREVIATIONS AND SCHEDULE

Approved: Associate Director for Operations:

Approved: Chief, Facilites Engineer:

Approved: Director, Medical Center:

Project Title: MRI SITE PREPERATION

Building No: 361 | Checked: YR | Drawn: IP

Location: VAMHCS MEDICAL CENTER PERRY POINT, MD

Date: 06/30/14

Project No: 512-09-315

DRAWING NO: E001

Dwg. 18 Of 29

DEPARTMENT OF VETERANS AFFAIRS

BKM# 060310.090

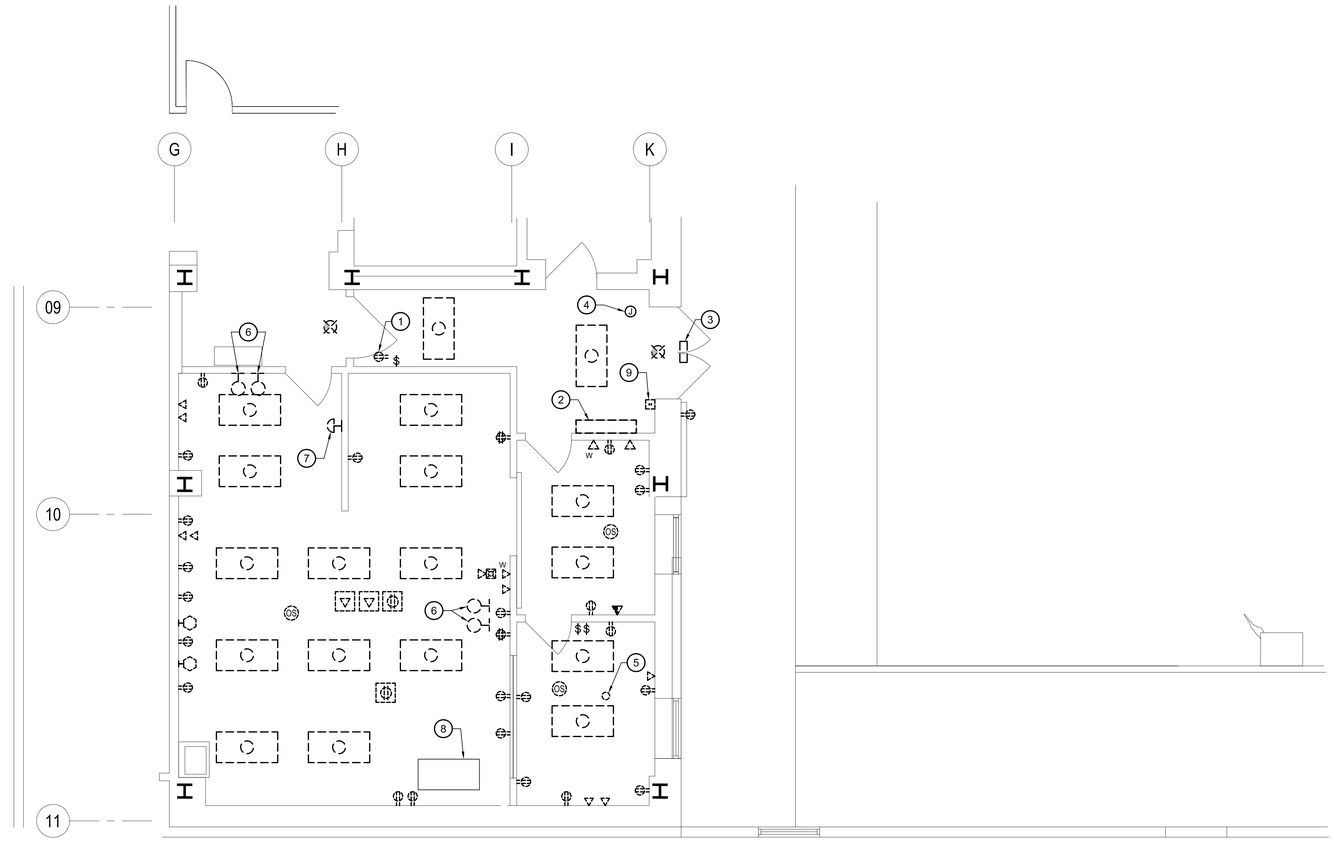

1 PART GROUND FLOOR PLAN - ELECTRICAL - DEMOLITION

SCALE: 1/4 " = 1'-0"

GENERAL NOTES:

1. REFER TO DRAWING E001 FOR ELECTRICAL LEGEND AND ABBREVIATIONS.
2. INFORMATION SHOWN ON THIS DRAWING PERTAIN TO EXISTING CONDITIONS HAS BEEN OBTAIN FROM AVAILABLE BUILDING DRAWINGS OR GENERAL FIELD OBSERVATIONS AND MAY NOT INDICATE ACTUAL EXISTING CONDITION IN DETAIL OR DIMENSION. THE CONTRACTOR IS RESPONSIBLE FOR DETERMINING ACTUAL EXISTING CONDITIONS PRIOR TO FABRICATION OF PERFORMANCE OF ANY WORK. SHOULD CONDITIONS BE DISCOVERED THAT PREVENT EXECUTION OF WORK AS INDICATED, CONTRACTOR SHALL IMMEDIATELY NOTIFY ENGINEER IN WRITING AND AWAIT DIRECTION BEFORE PROCEEDING WITH WORK.
3. REMOVE ALL ELECTRICAL EQUIPMENT AS INDICATED ON DRAWING U.O.N.
4. WIRE AND CONDUIT RELATED TO ITEM INDICATED FOR REMOVAL SHALL BE REMOVED BACK TO SOURCE OR NEXT EXISTING ITEM ON CIRCUIT TO REMAIN. ALL CONDUITS RUN EXPOSED AND ABOVE LAY-IN CEILING SHALL BE REMOVED. CONDUITS RUN CONCEALED IN EXISTING WALL TO REMAIN SHALL BE CUT OFF FLUSH, PLUGGED WITH GROUT, WHERE IT EXITS WALL AND SHALL BE ABANDONED IN PLACE. WHERE CIRCUIT BREAKERS ARE MADE AVAILABLE AS SPARE BY THIS WORK, PANELBOARD DIRECTORY SHALL BE UPGRADE.
5. EXISTING EQUIPMENT TO REMAIN SHALL BE PROTECTED DURING CONSTRUCTION.
6. MAINTAIN CONTINUITY OF EXISTING BRANCH CIRCUIT WIRING INTERRUPTED BY DEMOLITION OR NEW WORK. PROVIDE MATERIAL AND LABOR AS NECESSARY.

DRAWING NOTES:

1. CEILING MOUNTED RECEPTACLE FOR CONNECTION OF HVAC UNIT.
2. DISCONNECT EXISTING FCU FROM ELECTRICAL SERVICE, REMOVAL OF UNIT BY OTHERS. REMOVE EXISTING BRANCH CIRCUIT WIRING BACK TO SOURCE OR NEXT EXISTING DEVICE ON CIRCUIT TO REMAIN.
3. EXISTING EXTERIOR WALL MOUNTED LIGHTING FIXTURE TO BE REMOVED AND STORE FOR FUTURE USE.
4. INTERCEPT EXISTING BRANCH CIRCUIT WIRING TO EXTERIOR LIGHTING FIXTURE WITH JUNCTION BOX FOR FUTURE USE.
5. EXISTING WIRELESS ACCESS POINT TO BE REMOVED.
6. EXISTING BELL AND LIGHTS (EDWARDS SYSTEM) TO BE REMOVED.
7. EXISTING PUSH-BUTTON TO BE REMOVED.
8. EXISTING CEILING MOUNTED JUNCTION BOX AND ASSOCIATED CONDUITS TO REMAIN.
9. EXISTING FIRE ALARM SYSTEM PULL STATION SHALL BE REMOVED AND STORE FOR FUTURE USE. EXISTING WIRING TO REMAIN.

KEYPLAN

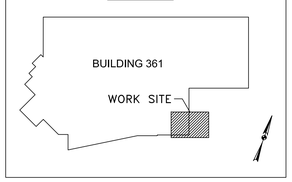

Additions:	Date:
Revisions:	

Consultants

BURDETTE KOEHLER MURPHY & ASSOCIATES, INC.
MECHANICAL / ELECTRICAL CONSULTING ENGINEERING
1416 CLARKVIEW ROAD
BALTIMORE, MARYLAND 21209
410.323.0600 – FAX 410.377.2543

RICKERT ENGINEERING, Inc.
STRUCTURAL ENGINEERING
8813 WALTHAM WOODS ROAD, SUITE 301
BALTIMORE, MARYLAND 21234
410.663.5110 – FAX 410.663.5114

BUILDING COST CONSULTANTS
COST ESTIMATING
12917 – 30TH AVENUE
PLATTSMOUTH, NEBRASKA 68048
402.298.8260 – FAX 402.298.8290

Seal:

ARCHITECTURE PLANNING ENGINEERING
POLT DESIGN GROUP
2215 CONOWINGO RD. 410.803.2141
Bel Air, Maryland 21015-1436 fax 410.836.6611
www.polt-design.com

Drawing Scale:
Drawing Start Date:
Drawing Finish Date:
Drawing Approved:

Drawing Title: PART GROUND FLOOR PLAN ELECTRICAL – DEMOLITION

Approved: Associate Director for Operations:
Approved: Chief, Facilites Engineer:
Approved: Director, Medical Center:

Project Title: MRI SITE PREPERATION

Building No: 361
Checked: YR
Drawn: IP
Location: VAMHCS MEDICAL CENTER PERRY POINT, MD

Date: 06/30/14
Project No: 512-09-315
DRAWING NO: E101
Dwg. 19 Of 29

DEPARTMENT OF VETERANS AFFAIRS

BKM# 060310.090

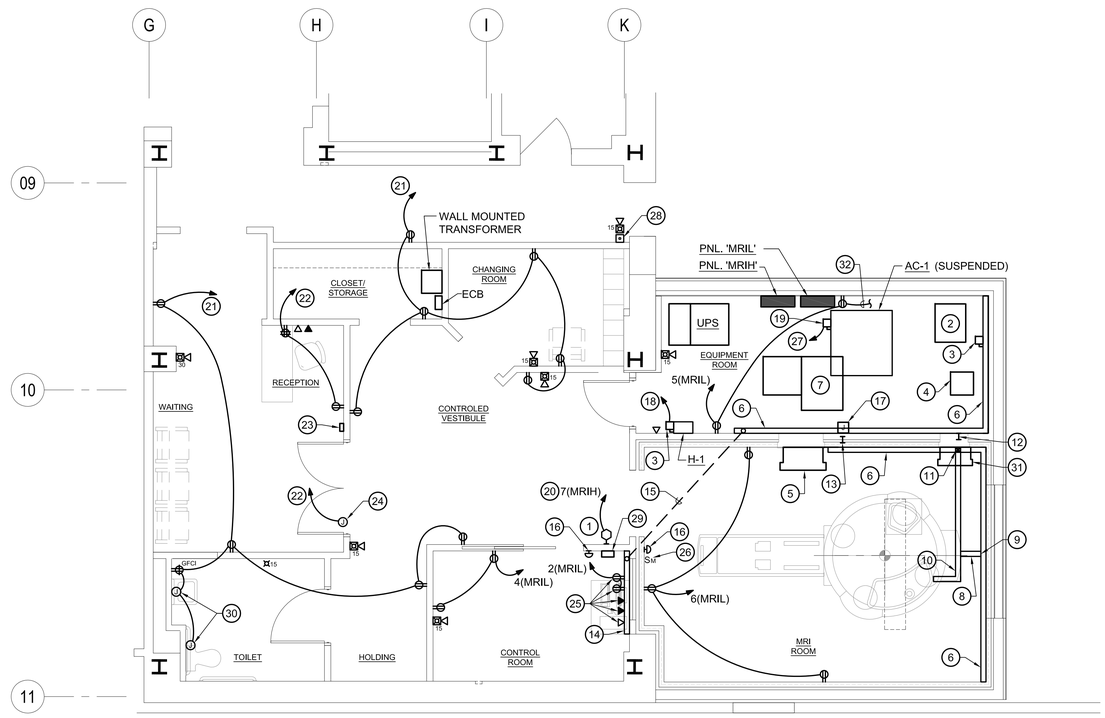

1 PART GROUND FLOOR PLAN - POWER - NEW WORK

SCALE: 1/4 " = 1'-0"

GENERAL NOTES:

1. REFER TO DRAWING E001 FOR ELECTRICAL LEGEND AND ABBREVIATIONS.
2. ALL RECEPTACLES IN RENOVATED AREAS SHALL BE HOSPITAL GRADE.
3. ALL RECEPTACLES IN MRI CONTROL AND EQUIPMENT ROOMS SHALL BE HOSPITAL GRADE, NON-FERROUS MATERIAL CONSTRUCTION FOR MRI APPLICATION, WITH ISOLATED GROUND TERMINAL.
4. ELECTRICAL CONTRACTOR SHALL PROVIDE OUTLET BOX AND 1" CONDUIT WITH PULL WIRE FROM OUTLET BOX TO ACCESSIBLE CEILING SPACE, WHERE TELEPHONE OR DATA OUTLET INDICATED ON FLOOR PLAN. INSTALLATION OF TELECOMMUNICATION OUTLET AND WIRES BY OTHERS.
5. NEW FIRE ALARM SYSTEM DEVICES SHALL BE CONNECTED TO EXISTING FIRE ALARM SYSTEM. PROVIDE MODIFICATION TO EXISTING FIRE ALARM SYSTEM AND PROGRAMMING IN ORDER ACCOMMODATE NEW FIRE ALARM SYSTEM DEVICES.
6. ALL GROUNDING CONDUCTORS SHALL BE SAME SIZE AS CIRCUIT CONDUCTORS AND RUN IN CONDUIT WITH BRANCH CIRCUIT CONDUCTORS FOR BRANCH CIRCUITS ORIGINATED IN PANELS 'MRIH' AND 'MRIL'.
7. EMI FILTER SHALL BE PROVIDED BY RF SHIELDING VENDOR WHERE ELECTRICAL FEED PASSES THROUGH RF SHIELDING. LOCATION AND NUMBER OF THESE FILTERS SHALL BE COORDINATED WITH ELECTRICAL CONTRACTOR.
8. ALL NEW BRANCH CIRCUIT WIRING FROM RENOVATED SPACE TO EXISTING ELECTRICAL SPACES SHALL BE INSTALLED IN CEILING SPACE OF EXISTING CORRIDOR AREAS.
9. ALL EXISTING PANEL MANUFACTURER IS WESTINGHOUSE.
10. COORDINATE LAYOUT OF EQUIPMENT, WIREWAYS, ETC. WITH HMSA DRAWINGS.

DRAWING NOTES:

1. 30A, 480V, 3Ø, 4W, NEMA L16-30 RECEPTACLE.
2. HEAT EXCHANGER. REFER TO PART ONE-LINE DIAGRAM ON DRAWING E301 FOR CONNECTION.
3. NFSS 30A, 480V, 3Ø IN NON-FERROUS ENCLOSURE.
4. HELIUM COMPRESSOR POWERED BY HMSA.
5. RFIP FILTER PANEL BY HMSA.
6. 6" x 24" NON-FERROUS, FOUR COMPARTMENT WIREWAY WITH REMOVABLE COVER, WALL MOUNTED AT FLOOR LEVEL DIVIDERS SHALL BE CAPABLE OF SUPPORTING FOUR POUNDS PER LINEAR FOOT. GROMMET SHALL BE PROVIDED FOR EACH OPENING IN WIREWAY.
7. RFIP CABINET.
8. 6" x 24" NON-FERROUS, FOUR COMPARTMENT WIREWAY WITH REMOVABLE COVER, FLOOR MOUNTED. GROMMET SHALL BE PROVIDED FOR EACH OPENING IN WIREWAY.
9. PROVIDE OPEN TRANSITION AREA AT FLOOR WIREWAY.
10. 3" x 6" NON-FERROUS CABLE TRAY FROM MCU PANEL TO GANTRY, MOUNTED ABOVE DROP CEILING.
11. 3 1/2" x 6" NON-FERROUS CABLE TRAY, VERTICAL SECTION FROM MCU PANEL TO OVERHEAD CABLE TRAY.
12. 2 - 1 3/4" WAVE GUIDES FOR HELIUM LINES FROM EQUIPMENT ROOM INTO OVERHEAD CABLE TRAY. COORDINATE EXACT LOCATION IN FIELD.
13. 4 - 1 3/4" WAVE GUIDES FOR GRADIENT WATER LINES FROM EQUIPMENT ROOM INTO LOWEST WIREWAY COMPARTMENT. COORDINATE EXACT LOCATION AT FIELD.
14. 3 1/2" x 6" NON-FERROUS WIREWAY AT OPERATOR CONSOLE, WALL MOUNTED.
15. 4" NON-FERROUS CONDUIT, MOUNTED UNDER SLAB.
16. EMERGENCY RUN-DOWN BUTTON (ERDU). ELECTRICAL CONTRACTOR SHALL PROVIDE OUTLET BOX AND 1/2" CONDUIT WITH PULL WIRE TO CEILING SPACE.
17. JUNCTION BOX FOR RFIP CABINET. COORDINATE MOUNTING HEIGHT IN FIELD.
18. PROVIDE 15A, 3 POLE BRANCH CIRCUIT BREAKER IN EXISTING SPACE IN PANEL "LP-GB", LOCATED IN ELECTRICAL ROOM GC-110 (DISTANCE APPROX. 50'). AIC RATING OF NEW BRANCH CIRCUIT BREAKER TO MATCH AIC RATING OF EXISTING BRANCH CIRCUIT BREAKERS. EXTEND NEW BRANCH CIRCUIT WIRING 3 #12 + 1 #12 GRD IN 3/4" CONDUIT TO NEW CIRCUIT BREAKER.
19. 60A, 600V, 3Ø, NON-FUSED SAFETY SWITCH IN NEMA 1 NON-FERROUS ENCLOSURE.
20. 3 #10 + 1 #10 GRD IN 3/4" CONDUIT.
21. REPLACE EXISTING 50A, 2P BRANCH CIRCUIT BREAKER IN PANEL "RP-GB1" LOCATED IN ELECTRICAL ROOM GC-110 (DISTANCE APPROX. 50'), WHICH BECOME SPARE AFTER DEMOLITION WORK WITH 2 (TWO) 20A, 1P BRANCH CIRCUIT BREAKERS. AIC RATING OF NEW BRANCH CIRCUIT BREAKERS TO MATCH AIC RATING OF EXISTING BRANCH CIRCUIT BREAKERS. EXTEND NEW BRANCH CIRCUIT WIRING 2 #12 + 1 #12 GRD IN 3/4" CONDUIT TO NEW CIRCUIT BREAKER.
22. REPLACE EXISTING 20A, 2P BRANCH CIRCUIT BREAKER IN PANEL "RP-GB1", LOCATED IN ELECTRICAL ROOM GC-110 (DISTANCE APPROX. 50'), WHICH BECOME SPARE AFTER DEMOLITION WORK WITH TWO (2) 20A, 1P BRANCH CIRCUIT BREAKERS. AIC RATING OF NEW BRANCH CIRCUIT BREAKERS TO MATCH AIC RATING OF EXISTING BRANCH CIRCUIT BREAKERS. EXTEND NEW BRANCH CIRCUIT WIRING 2 #12 + 1 #12 GRD IN 3/4" CONDUIT TO NEW CIRCUIT BREAKER.
23. PROVIDE RECESSED OUTLET BOX AND 1" CONDUIT FROM OUTLET BOX TO CEILING SPACE FOR INSTALLATION OF CARD READER AND ASSOCIATED WIRES BY OTHERS.
24. JUNCTION BOX MOUNTED ABOVE CEILING FOR POWER CONNECTION TO DOOR ELECTRIC STRIKE. COORDINATE EXACT LOCATION WITH DOOR POWER CONNECTION.
25. PROVIDE TWO COMPARTMENT NON-FERROUS WIREWAY FOR INSTALLATION OF RECEPTACLE AND TELECOMMUNICATION OUTLET. PROVIDE 1" CONDUIT WITH PULL WIRE FROM TELECOMMUNICATION COMPARTMENT TO CEILING SPACE.
26. MOTOR SWITCH FOR CONTROL OF EF-1. COORDINATE EXACT LOCATION WITH HITACHI.
27. PROVIDE 40A, 3 POLE BRANCH CIRCUIT BREAKER IN EXISTING SPACE IN PANEL "LP-GB", LOCATED IN ELECTRICAL ROOM GC-110 (DISTANCE APPROX. 50') AIC RATING OF NEW BRANCH CIRCUIT BREAKER TO MATCH AIC RATING OF EXISTING BRANCH CIRCUIT BREAKERS. EXTEND NEW BRANCH CIRCUIT WIRING 3 #8 + 1 #10 GRD IN 3/4" CONDUIT TO NEW CIRCUIT BREAKER.
28. EXISTING FIRE ALARM SYSTEM PULL STATION SHALL BE REINSTALLED AT THIS LOCATION. EXTEND EXISTING WIRING TO NEW LOCATION.
29. REMOTE STATUS PANEL FOR UPS. COORDINATE EXACT LOCATION WITH HITACHI.
30. JUNCTION BOX FOR CONNECTION OF INFRARED PLUMBING FIXTURE. COORDINATE EXACT LOCATION WITH PLUMBING CONTRACTOR.
31. MCU PANEL BY HMSA.
32. EXTEND BRANCH CIRCUIT WIRING TO ROOF RECEPTACLE.

KEYPLAN

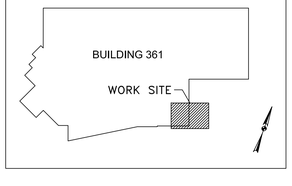

Additions: Date:

Revisions:

Consultants

BURDETTE KOEHLER MURPHY & ASSOCIATES, INC.
MECHANICAL / ELECTRICAL CONSULTING ENGINEERING
1416 CLARKVIEW ROAD
BALTIMORE, MARYLAND 21209
410.323.0600 – FAX 410.377.2543

RICKERT ENGINEERING, Inc.
STRUCTURAL ENGINEERING
8813 WALTHAM WOODS ROAD, SUITE 301
BALTIMORE, MARYLAND 21234
410.663.5110 – FAX 410.663.5114

BUILDING COST CONSULTANTS
COST ESTIMATING
12917 – 307H AVENUE
PLATTSMOUTH, NEBRASKA 68048
402.298.8260 – FAX 402.298.8290

Seal:

ARCHITECTURE PLANNING ENGINEERING
POLT DESIGN GROUP
2215 CONOWINGO RD. 410.803.2141
Bel Air, Maryland 21015-1436 fax 410.836.6611
www.polt-design.com

Drawing Scale:
Drawing Start Date:
Drawing Finish Date:
Drawing Approved:

Drawing Title: PART GROUND FLOOR PLAN POWER – NEW WORK
Approved: Associate Director for Operations:
Approved: Chief, Facilites Engineer:
Approved: Director, Medical Center:

Project Title: MRI SITE PREPERATION
Building No: 361
Checked: YR
Drawn: IP
Location: VAMHCS MEDICAL CENTER PERRY POINT, MD

Date: 06/30/14
Project No: 512-09-315
DRAWING NO: E201
Dwg. 20 Of 29

DEPARTMENT OF VETERANS AFFAIRS

BKM# 060310.090

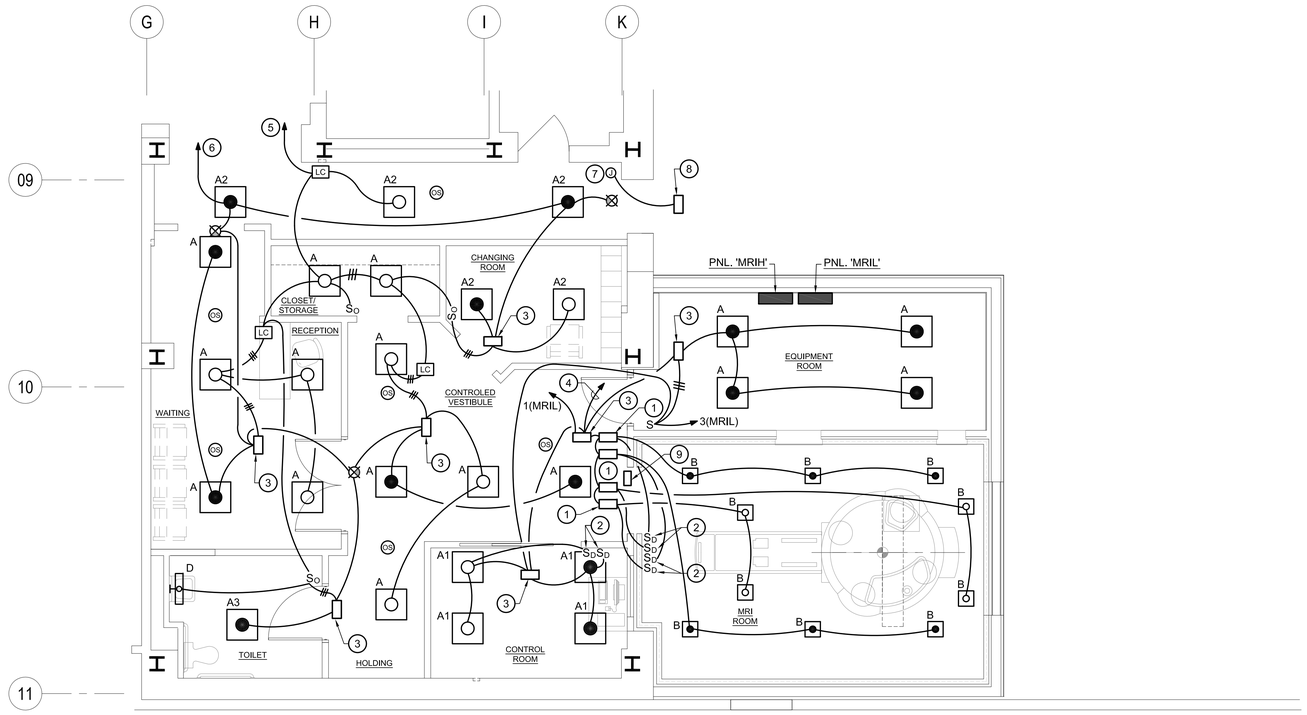

1 PART GROUND FLOORPLAN - LIGHTING - NEW WORK

SCALE: 1/4 " = 1'-0"

GENERAL NOTES:

1. REFER TO DRAWING E001 FOR ELECTRICAL LEGEND, ABBREVIATIONS AND LIGHTING FIXTURE SCHEDULE.
2. ALL NEW BRANCH CIRCUIT WIRING FROM RENOVATED SPACE TO EXISTING ELECTRICAL SPACES SHALL BE INSTALLED IN CEILING SPACE OF EXISTING CORRIDOR AREAS.
3. EXISTING PANELS MANUFACTURER IS WESTINGHOUSE.

DRAWING NOTES:

1. DIMMABLE LED DRIVERS (120-277V) FOR MRI ROOM, MOUNTED ABOVE CEILING IN JUNCTION BOX.
2. 0-10V DIMMER SWITCH.
3. RELAY CONTROL DEVICE GTO20A BY BODINE OR APPROVED EQUAL, MOUNTED ABOVE CEILING IN JUNCTION BOX.
4. PROVIDE 20A, 1P BRANCH CIRCUIT BREAKER IN EXISTING SPACE IN PANEL "E1RP-G", LOCATED IN ELECTRICAL ROOM IN GC-110 (DISTANCE APPROX. 50') AIC RATING OF NEW CIRCUIT BREAKER TO MATCH AIC RATING OF EXISTING BRANCH CIRCUIT BREAKERS. EXTEND NEW BRANCH CIRCUIT WIRING 2 #12 + 1 #12 GRD IN 3/4" CONDUIT TO NEW CIRCUIT BREAKER.
5. TO 20A, 1P SPARE BRANCH CIRCUIT BREAKER IN EXISTING SPACE IN PANEL "LP-GB", LOCATED IN ELECTRICAL ROOM GC-110 (DISTANCE APPROX. 50'), EXTEND NEW BRANCH CIRCUIT WIRING 2 #12 + 1 #12 GRD IN 3/4" CONDUIT TO CIRCUIT BREAKER.
6. PROVIDE 20A, 1P BRANCH CIRCUIT BREAKER IN EXISTING SPACE IN PANEL "E1LP-G", LOCATED IN ELECTRICAL ROOM GC-110. AIC RATING OF NEW CIRCUIT BREAKER TO MATCH AIC RATING OF EXISTING BRANCH CIRCUIT BREAKERS. EXTEND NEW BRANCH CIRCUIT WIRING 2 #12 + 1 #12 GRD IN 3/4" CONDUIT TO NEW CIRCUIT BREAKER.
7. JUNCTION BOX WITH INTERCEPTED CIRCUIT TO EXTERIOR LIGHTING FIXTURE. EXTEND BRANCH CIRCUIT WIRING TO REINSTALLED LIGHTING FIXTURE. WIRE SIZE TO MATCH EXISTING.
8. REINSTALLED EXISTING EXTERIOR WALL MOUNTED LIGHTING FIXTURE.
9. COORDINATE REQUIREMENT OF "IN-USE" SIGN WITH HMSA AND PROVIDE IF NECESSARY.

KEYPLAN

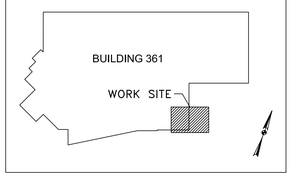

Additions: | Date:

Revisions:

Consultants

BURDETTE KOEHLER MURPHY & ASSOCIATES, INC.
MECHANICAL / ELECTRICAL CONSULTING ENGINEERING
1416 CLARKVIEW ROAD
BALTIMORE, MARYLAND 21209
410.323.0600 – FAX 410.377.2543

RICKERT ENGINEERING, Inc.
STRUCTURAL ENGINEERING
8813 WALTHAM WOODS ROAD, SUITE 301
BALTIMORE, MARYLAND 21234
410.663.5110 – FAX 410.663.5114

BUILDING COST CONSULTANTS
COST ESTIMATING
12917 – 30TH AVENUE
PLATTSMOUTH, NEBRASKA 68048
402.298.8260 – FAX 402.298.8290

Seal:

ARCHITECTURE PLANNING ENGINEERING
POLT DESIGN GROUP
2215 CONOWINGO RD. 410.803.2141
Bel Air, Maryland 21015-1436 fax 410.836.6611
www.polt-design.com

Drawing Scale:
Drawing Start Date:
Drawing Finish Date:
Drawing Approved:

Drawing Title: PART GROUND FLOOR PLAN LIGHTING – NEW WORK
Approved: Associate Director for Operations:
Approved: Chief, Facilites Engineer:
Approved: Director, Medical Center:

Project Title: MRI SITE PREPERATION
Building No: 361
Checked: YR
Drawn: IP
Location: VAMHCS MEDICAL CENTER PERRY POINT, MD

Date: 06/30/14
Project No: 512-09-315
DRAWING NO: E202
Dwg. 21 Of 29

DEPARTMENT OF VETERANS AFFAIRS

BKM# 060310.090

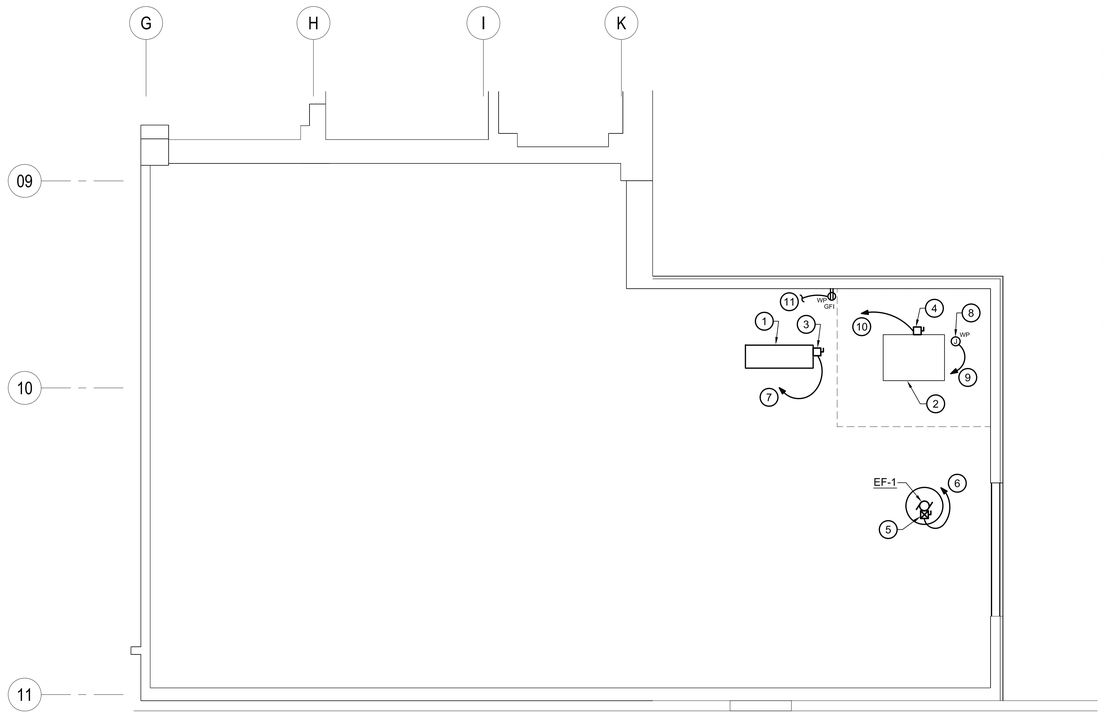

1 **PART ROOF PLAN - ELECTRICAL - NEW WORK**
SCALE: 1/4 " = 1'-0"

DRAWING NOTES:

1. ACCU-1 UNIT ROOF MOUNTED.
2. CHILLER ROOF MOUNTED, PROVIDED BY HMSA.
3. 30A, 600V, 3Ø, NON-FUSED SAFETY SWITCH IN NEMA 3R ENCLOSURE.
4. 60A, 600V, 3Ø, NON-FUSED SAFETY SWITCH IN NEMA 3R ENCLOSURE.
5. COMBINATION 30A, 480V, 3Ø NON-FUSED DISCONNECT SWITCH AND MOTOR STARTER IN NEMA 3R ENCLOSURE.
6. PROVIDE 15A, 3 POLE BRANCH CIRCUIT BREAKER IN EXISTING SPACE IN PANEL "E1LP-G", LOCATED IN ELECTRICAL ROOM GC-110 (DISTANCE APPROX. 70') AIC RATING OF NEW BRANCH CIRCUIT BREAKER TO MATCH AIC RATING OF EXISTING BRANCH CIRCUIT BREAKERS. EXTEND NEW BRANCH CIRCUIT WIRING 3 #12 + 1 #12 GRD IN 3/4" CONDUIT TO NEW CIRCUIT BREAKER.
7. PROVIDE 20A, 3 POLE BRANCH CIRCUIT BREAKER IN EXISTING SPACE IN PANEL "LP-GB" LOCATED IN ELECTRICAL ROOM GC-110 (DISTANCE APPROX. 70'). AIC RATING OF NEW BRANCH CIRCUIT BREAKER TO MATCH AIC RATING OF EXISTING BRANCH CIRCUIT BREAKERS. EXTEND NEW BRANCH CIRCUIT WIRING 3 #12 + 1 #12 GRD IN 3/4" CONDUIT TO NEW CIRCUIT BREAKER.
8. JUNCTION BOX FOR CONNECTION OF HEAT TRACE CABLE PROVIDED BY OTHERS. COORDINATE EXACT LOCATION OF BOX WITH HEAT TRACE INSTALLER.
9. PROVIDE 20A, 1P GFCI BRANCH CIRCUIT BREAKER IN EXISTING SPACE IN PANEL "E1RP-G", LOCATED IN ELECTRICAL ROOM GC-110 (DISTANCE APPROX. 70'). AIC RATING OF NEW BRANCH CIRCUIT BREAKER TO MATCH AIC RATING OF EXISTING BRANCH CIRCUIT BREAKERS. EXTEND NEW BRANCH CIRCUIT WIRING 2 #12 + 1 #12 GRD IN 3/4" CONDUIT TO NEW CIRCUIT BREAKER.
10. PROVIDE 40A, 3 POLE BRANCH CIRCUIT BREAKER IN EXISTING SPACE IN PANEL "LP-GB" LOCATED IN ELECTRICAL ROOM GC-110 (DISTANCE APPROX. 70'). AIC RATING OF NEW BRANCH CIRCUIT BREAKER TO MATCH AIC RATING OF EXISTING BRANCH CIRCUIT BREAKERS. EXTEND NEW BRANCH CIRCUIT 3 #8 + 1 #10 GRD IN 3/4" CONDUIT TO NEW CIRCUIT BREAKER.
11. FOR CONTINUATION REFER TO DRAWING E201.

GENERAL NOTES:

1. REFER TO DRAWING E001 FOR ELECTRICAL LEGEND AND ABBREVIATIONS.
2. EXISTING PANELS MANUFACTURER IS WESTINGHOUSE.

KEYPLAN

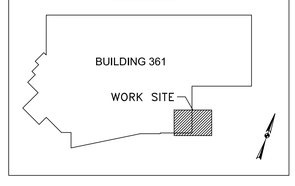

Additions:	Date:
Revisions:	

Consultants

BURDETTE KOEHLER MURPHY & ASSOCIATES, INC.
MECHANICAL / ELECTRICAL CONSULTING ENGINEERING
1416 CLARKVIEW ROAD
BALTIMORE, MARYLAND 21209
410.323.0600 – FAX 410.377.2543

RICKERT ENGINEERING, Inc.
STRUCTURAL ENGINEERING
8813 WALTHAM WOODS ROAD, SUITE 301
BALTIMORE, MARYLAND 21234
410.663.5110 – FAX 410.663.5114

BUILDING COST CONSULTANTS
COST ESTIMATING
12917 – 30TH AVENUE
PLATTSMOUTH, NEBRASKA 68048
402.298.8260 – FAX 402.298.8290

Seal:

ARCHITECTURE
PLANNING
ENGINEERING
POLT DESIGN GROUP
2215 CONOWINGO RD.
Bel Air, Maryland 21015-1436
410.803.2141
fax 410.836.6611
www.polt-design.com

Drawing Scale:
Drawing Start Date:
Drawing Finish Date:
Drawing Approved:

Drawing Title: PART ROOF PLAN ELECTRICAL – NEW WORK
Approved: Associate Director for Operations:
Approved: Chief, Facilites Engineer:
Approved: Director, Medical Center:

Project Title: MRI SITE PREPERATION
Building No: 361
Checked: YR
Drawn: IP
Location: VAMHCS MEDICAL CENTER PERRY POINT, MD

Date: 06/30/14
Project No: 512-09-315
DRAWING NO: E203
Dwg. 22 Of 29

DEPARTMENT OF VETERANS AFFAIRS

BKM# 060310.090

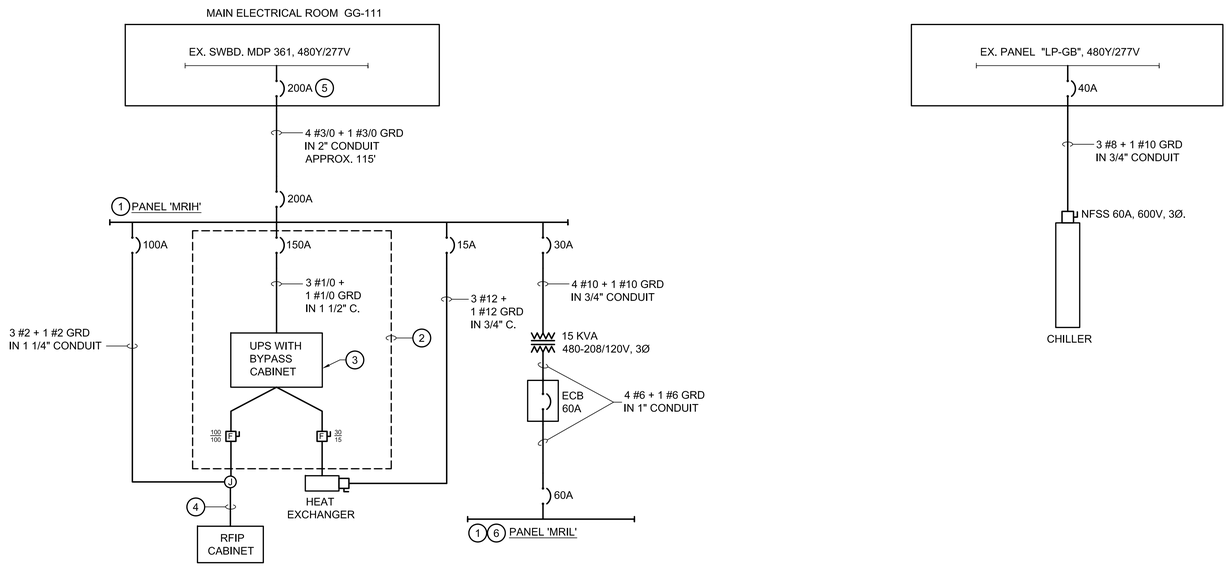

1 PART POWER DISTRIBUTION SYSTEM ONE - LINE DIAGRAM

NOT TO SCALE

GENERAL NOTES:

1. REFER TO DRAWING E001 FOR ELECTRICAL LEGEND AND ABBREVIATIONS.

DRAWING NOTES:

1. NEUTRAL AND GROUND BUS SHALL BE ISOLATED FROM PANEL FRAME.
2. ELECTRICAL EQUIPMENT INCLUDING 150A BRANCH CIRCUIT BREAKER, UPS WITH BYPASS CABINET, DISCONNECT SWITCHES AND ASSOCIATED WIRES AND CONDUITS SHOWN WITHIN DASHED AREA ARE DEDUCT ALTERNATE. IF OWNER ELECT TO PROCEED WITH DEDUCT ALTERNATE OPTION RFIP CABINET AND HEAT EXCHANGER SHALL BE SERVED VIA 100A AND 15A BRANCH CIRCUIT BREAKERS AS INDICATED ON ONE LINE DIAGRAM OUTSIDE OF DASHED AREA.
3. UPS AND BYPASS CABINET SHALL BE PROVIDED BY CPN POWER. THIS EQUIPMENT HAS BEEN TESTED WITH HITACHI MRI AND ACCEPTED BY HITACHI MANUFACTURER. UPS SHALL BE 100 KVA / 90 KW, 3 PHASE, 480 VOLT INPUT, 480 VOLT OUTPUT MODEL CPN-UPS-100-99-480/480. MAINTENANCE BYPASS CABINET SHALL BE PROVIDED WITH FOLLOWING FEATURES AND ACCESSORIES: THREE (3) 150A BREAKERS, TIE BREAKER FOR MAKE-BEFORE-BRAKE MAINTENANCE BYPASS OPERATION CONTROL CUBICLE THAT INCLUDES 120 VOLT POWER FOR REMOTE STATUS ALARM PANEL AND REMOTE STATUS ALARM PANEL.
4. ELECTRICAL CONTRACTOR SHALL PROVIDE PIGTAIL FROM RFIP CABINET TO JUNCTION BOX AS REQUIRED WITH FLEXIBLE CONDUIT AND DIELECTRIC UNION.
5. PROVIDE NEW DRAW OUT TYPE POWER CIRCUIT BREAKER AND ALL REQUIRED ACCESSORY AS NEEDED IN SPACE CUBICLE IN EXISTING SWITCHBOARD MDP361 (DS POWER CIRCUIT BREAKERS IN SWITCHBOARD BY WESTINGHOUSE). AIC RATING OF NEW CIRCUIT BREAKER SHALL MATCH AIC RATING OF EXISTING CIRCUIT BREAKERS.
6. #4 INSULATED GROUND CONDUCTOR SHALL BE PROVIDED FROM GROUND BUS TO RF ROOM GROUND STUD (PROVIDED BY SHIELDING VENDOR).

Additions:	Date:
Revisions:	

Consultants

BURDETTE KOEHLER MURPHY & ASSOCIATES, INC.
MECHANICAL / ELECTRICAL CONSULTING ENGINEERING
1416 CLARKVIEW ROAD
BALTIMORE, MARYLAND 21209
410.323.0600 – FAX 410.377.2543

RICKERT ENGINEERING, Inc.
STRUCTURAL ENGINEERING
8813 WALTHAM WOODS ROAD, SUITE 301
BALTIMORE, MARYLAND 21234
410.663.5110 – FAX 410.663.5114

BUILDING COST CONSULTANTS
COST ESTIMATING
12917 – 30TH AVENUE
PLATTSMOUTH, NEBRASKA 68048
402.298.8260 – FAX 402.298.8290

Seal:

ARCHITECTURE
PLANNING
ENGINEERING
POLT DESIGN GROUP
2215 CONOWINGO RD. 410.803.2141
Bel Air, Maryland 21015-1436 fax 410.836.6611
www.polt-design.com

Drawing Scale:	Drawing Title: PART POWER DISTRIBUTION SYSTEM ONE–LINE DIAGRAM	Project Title: MRI SITE PREPERATION	Date: 06/30/14
Drawing Start Date:	Approved: Associate Director for Operations:		Project No: 512-09-315
Drawing Finish Date:	Approved: Chief, Facilites Engineer:	Building No: 361 / Checked: YR / Drawn: IP	DRAWING NO: E301
Drawing Approved:	Approved: Director, Medical Center:	Location: VAMHCS MEDICAL CENTER PERRY POINT, MD	Dwg. 23 Of 29

DEPARTMENT OF VETERANS AFFAIRS

BKM# 060310.090

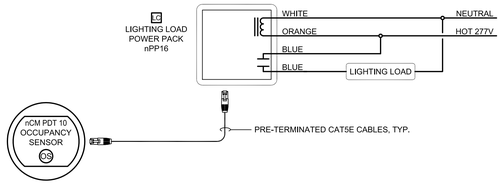

LIGHTING LOAD CONTROL WIRING DIAGRAM

NO SCALE

NOTES: (APPLY TO THIS DETAIL ONLY)

1. BASIS OF DESIGN IS SENSOR SWITCH NLIGHT SYSTEM, OR APPROVED EQUAL.

SEQUENCE OF OPERATION:

1. UPON DETECTION OF OCCUPANCY BY CEILING MOUNTED SENSOR, LIGHTING FIXTURES TURNED ON AND REMAIN ON.
2. UPON DETECTION OF VACANCY BY CEILING MOUNTED SENSORS, A THIRTY-MINUTE DELAY IS INITIATED. IF NO OCCUPANCY IS DETECTED DURING THE DELAY, LIGHTING FIXTURES ARE TURNED OFF AND REMAIN OFF UNTIL DETECTION OF OCCUPANCY.
3. IF OCCUPANCY IS DETECTED DURING THIRTY-MINUTE DELAY, LIGHTING FIXTURES REMAIN ON AND DELAY IS RESET.

PANEL: MRIH RATING: 225 AMPS MAIN: 200A MCB VOLTAGE: 480 Y/ 277 V 3 PH, 4 W
AIC: 30,000 MOUNTING: SURFACE NOTE: (1)
LOCATION: EQUIPMENT ROOM

CKT	EQUIPMENT SERVED	LOAD (KVA) AØ	BØ	CØ	CB	BUS A B C	CB	LOAD (KVA) AØ	BØ	CØ	EQUIPMENT SERVED	CKT
1	15 KVA XFMR	5.0			30		150	33			UPS WITH BY-PASS CABINET	2 (2)
3	- - - - - - - - - - - - - - - -		5.0						33		- - - - - - - - - - - - - - - -	4
5	- - - - - - - - - - - - - - - -			5.0						33	- - - - - - - - - - - - - - - -	6
7	MAGNET RAMP-UP	6.7			30		100	22			RFIP CABINET	8 (3)
9	RECEPTACLE		6.7						22		- - - - - - - - - - - - - - - -	10
11	-			6.7						22	- - - - - - - - - - - - - - - -	12
13	SPACE	-					15	0.9			HEAT EXCHANGER	14 (3)
15			-						0.9		- - - - - - - - - - - - - - - -	16
17				-						0.9	- - - - - - - - - - - - - - - -	18
19		-					20	-			SPARE	20
21			-				20		-		SPARE	22
23				-			20			-	SPARE	24
25		-					20	-			SPARE	26
27			-						-		SPACE	28
29				-						-		30
31		-						-				32
33			-						-			34
35				-						-		36
37		-						-				38
39			-						-			40
41				-						-		42
		5.0	5.0	5.0	SUB-TOTALS			33	33	33		

CONNECTED LOAD:
AØ: 38 KVA= 137 A
BØ: 38 KVA= 137 A
CØ: 38 KVA= 137 A

PANEL: MRIL RATING: 100 AMPS MAIN: 60A MCB VOLTAGE: 208 Y/ 120 V 3 PH, 4 W
AIC: 10,000 MOUNTING: SURFACE NOTE: (1)
LOCATION: EQUIPMENT ROOM

CKT	EQUIPMENT SERVED	LOAD (KVA) AØ	BØ	CØ	CB	BUS A B C	CB	LOAD (KVA) AØ	BØ	CØ	EQUIPMENT SERVED	CKT
1	MRI ROOM LIGHTING	0.5			20		20	0.4			RECEPT. CONTROL ROOM	2
3	CONTROL & EQUIP. RM'S LTG.		0.3		20		20		0.4		RECEPT. CONTROL ROOM	4
5	RECEPT. EQUIP. ROOM			0.4	20		20			0.5	RECEPT. MRI ROOM	6
7	SPARE	-			20			-			SPACE	8
9	-		-		20				-			10
11	-			-	20					-		12
13	SPACE	-						-				14
15			-						-			16
17				-						-		18
19		-						-				20
21			-						-			22
23				-						-		24
25		-						-				26
27			-						-			28
29				-						-		30
		0.5	0.3	0.4	SUB-TOTALS			0.4	0.4	0.5		

CONNECTED LOAD:
AØ: 0.9 KVA= 8 A
BØ: 0.7 KVA= 6 A
CØ: 0.9 KVA= 8 A

GENERAL NOTES:

1. REFER TO DRAWING E001 FOR ELECTRICAL LEGEND AND ABBREVIATIONS.

DRAWING NOTES:

(1) NEUTRAL AND GROUND BUS SHALL BE ISOLATED FROM PANEL FRAME.

(2) DEDUCT ALTERNATE. REFER TO ONE-LINE DIAGRAM ON DRAWING E301 FOR MORE DETAILS.

(3) REFER TO ONE-LINE DIAGRAM ON DRAWING E301 FOR MORE DETAILS.

Additions: Date:

Revisions:

Consultants

BURDETTE KOEHLER MURPHY & ASSOCIATES, INC.
MECHANICAL / ELECTRICAL CONSULTING ENGINEERING
1416 CLARKVIEW ROAD
BALTIMORE, MARYLAND 21209
410.323.0600 – FAX 410.377.2543

RICKERT ENGINEERING, Inc.
STRUCTURAL ENGINEERING
8813 WALTHAM WOODS ROAD, SUITE 301
BALTIMORE, MARYLAND 21234
410.663.5110 – FAX 410.663.5114

BUILDING COST CONSULTANTS
COST ESTIMATING
12917 – 30TH AVENUE
PLATTSMOUTH, NEBRASKA 68048
402.298.8260 – FAX 402.298.8290

Seal:

ARCHITECTURE
PLANNING
ENGINEERING

POLT DESIGN GROUP
2215 CONOWINGO RD. 410.803.2141
Bel Air, Maryland 21015-1436 fax 410.836.6611
www.polt-design.com

Drawing Scale:
Drawing Start Date:
Drawing Finish Date:
Drawing Approved:

Drawing Title: ELECTRICAL PANEL SCHEDULES
Approved: Associate Director for Operations:
Approved: Chief, Facilites Engineer:
Approved: Director, Medical Center:

Project Title: MRI SITE PREPERATION
Building No: 361
Checked: YR
Drawn: IP
Location: VAMHCS MEDICAL CENTER PERRY POINT, MD

Date: 06/30/14
Project No: 512-09-315
DRAWING NO: E401
Dwg. 24 Of 29

DEPARTMENT OF VETERANS AFFAIRS

BKM# 060310.090

PLUMBING DRAIN SCHEDULE

ABBR.	FIXTURE	AREA	MANUFACTURER	MODEL NO.	REMARKS
FD-C	FLOOR DRAIN	TOILET ROOMS MECH.	WATTS	FD-320-Y	SEE NOTE No. 1 & 3
FD-M	FUNNEL FLOOR DRAIN	EQUIPMENT ROOMS	WATTS	FD-340	SEE NOTE No. 1, 2, 3 & 4
R.D.	ROOF DRAIN	MAIN ROOF	WATTS	RD-300-F	SEE NOTE No. 5, 6 & 7

NOTE:
1. 1/2" TRAP PRIMING LINE
2. ADJUSTABLE NICKEL BRONZE STRAINER
3. SEDIMENT BUCKET
4. 6" DIAMETER FUNNEL
5. VANDEL PROOF
6. ADJUSTABLE EXTENSION FLANGE
7. UNDERDECK CLAMP

PIPE AND EQUIPMENT INSULATION SCHEDULE

SYSTEM	PIPE SIZE	TYPE	THICKNESS	MAXIMUM K-VALUE @ 75°F	JACKET	NOTES
DOMESTIC COLD WATER	ALL SIZES	RIGID FIBERGLASS	1"	0.23	ASJ	1, 2, 3 & 4
DOMESTIC HOT WATER AND RECIRCULATING	ALL SIZES	RIGID FIBERGLASS	1 1/2"	0.23	ASJ	1, 2 & 3
HORIZONTAL STORM WATER AND DRAIN BODIES	ALL SIZES	RIGID FIBERGLASS	1"	0.23	ASJ	1, 2 & 3

NOTES:
1. SEE SPECIFICATIONS FOR ADDITIONAL INSULATION REQUIREMENTS AS WELL AS DETAILED PRODUCT AND INSTALLATION REQUIREMENTS. WHERE DRAWINGS AND SPECIFICATIONS CONFLICT, THE MORE STRINGENT REQUIREMENT SHALL APPLY.
2. ASJ (ALL SERVICE JACKET) SHALL INCLUDE VAPOR RETARDER.
3. FOR PIPING INSTALLED BELOW 8'-0" ABOVE FINISHED FLOOR, PROVIDE PVC JACKET.
4. ALL EXTERIOR FIBERGLASS INSULATION SHALL BE PROVIDED WITH A WEATHERPROOF ALUMINUM JACKET.

PLUMBING FIXTURE SCHEDULE

P #	DESCRIPTION	CW	HW	SAN	VENT	TRAP	REMARKS
P-110	WATER CLOSET	1"	-	4"	2"	INT.	SEE NOTE No. 1,2
P-418	LAVATORY	1/2"	1/2"	1 1/2"	1 1/2"	'P'	-

NOTES:
1. HANDICAPPED, RIM OF FIXTURE SHALL BE 17" ABOVE FINISHED FLOOR.
2. WALL HUNG.

PLUMBING GENERAL NOTES

1. WHERE POSSIBLE, MAKE WATER CONNECTIONS TO FIXTURES ABOVE FLOOR.
2. PROVIDE VACUUM BREAKERS ON ALL HOSE CONNECTION TYPE FITTING HOSE BIBBS, WALL HYDRANTS, ETC.
3. LIMIT SANITARY AND WASTE PIPING DEAD END TO 12 INCHES FROM MAIN OR MAIN BRANCH.
4. PROVIDE A MINIMUM OF 24 INCHES CLEARANCE FOR RODDING OF CLEANOUTS.
5. CONTRACTOR SHALL COORDINATE ALL WORK WITH ALL OTHER DISCIPLINES PRIOR TO CONSTRUCTION.
6. ACCESS SHALL BE PROVIDED FOR ALL CONCEALED VALVES, CLEANOUTS, ETC. LOCATED AT/IN CEILINGS, WALLS OR FLOORS.
7. CONTRACTOR SHALL REFER TO ARCHITECTURAL DRAWINGS FOR EXACT LOCATIONS OF AIR, GAS, VACUUM, OXYGEN OUTLET, PLUMBING FIXTURES, FLOOR DRAINS AND OTHER EQUIPMENT.
8. ALL FLOOR DRAINS CONNECTED TO SANITARY PIPING SHALL BE PROVIDED WITH A PRIMED TRAP UNLESS OTHERWISE NOTED.
9. CONTRACTOR SHALL COORDINATE THE LOCATION OF ALL FLUSH TYPE CLEANOUTS WITH WALLS, EQUIPMENT, DUCTWORK, PIPE, STRUCTURAL MEMBERS, ETC.
10. ALL SPECIFICATIONS AND DRAWINGS (I.E., ARCHITECTURAL, STRUCTURAL, MECHANICAL, PLUMBING, FIRE PROTECTION AND ELECTRICAL) ARE COMPLEMENTARY AND MUST BE USED IN COMBINATION TO OBTAIN COMPLETE CONSTRUCTION INFORMATION.
11. ALL VERTICAL SANITARY SEWER AND STORM WATER PIPING WHICH TURN 90 DEGREES AFTER PASSING THROUGH A FLOOR SHALL BE INSTALLED AS TIGHT AS POSSIBLE TO THE UNDERSIDE OF THE STRUCTURE. ALL VOID OPENINGS AROUND PIPE SHALL BE FIRE STOPPED AS REQUIRED AND APPROVED BY LOCAL CODES.
12. COORDINATE ALL PIPING TO BE INSTALLED WITH OTHER TRADES (I.E., MECHANICAL, FIRE PROTECTION AND ELECTRICAL) TO ASSURE THAT ALL PIPING SYSTEMS ARE INSTALLED ABOVE FINISHED CEILING OR IN A CONCEALED SPACE. ALL CEILING HEIGHTS INDICATED ON ARCHITECTURAL AND/OR INTERIOR DESIGN DRAWINGS AND MINIMUM CLEARANCES REQUIRED BY LOCAL CODES SHALL BE MAINTAINED THROUGHOUT THE BUILDING.
13. ALL CUTTING, DRILLING AND PATCHING OF WALLS, FLOORS OR STRUCTURAL MEMBERS FOR THE INSTALLATION OF THE PLUMBING SYSTEMS SHALL BE PROVIDED BY THE PLUMBING CONTRACTOR. STRUCTURAL COMPONENTS SHALL NOT BE CUT, DRILLED OR MODIFIED IN ANY WAY WITHOUT THE STRUCTURAL ENGINEER'S REVIEW AND APPROVAL.
14. PROVIDE ONE (1) TRAP PRIMER VALVE FOR EACH FLOOR DRAIN WITHOUT A CONSTANT SOURCE OF WATER SUPPLY TO MAINTAIN TRAP SEAL. PRIMER VALVE SHALL BE LOCATED IN AN ACCESSIBLE AREA AND CONNECTED TO THE NEAREST 3/4" OR LARGER COLD WATER LINE SERVING A FIXTURE.
15. BACKFLOW PREVENTER ASSEMBLY SHALL BE INSTALLED IN AN ACCESSIBLE LOCATION (NOT TO EXCEED 48" ABOVE THE FINISHED FLOOR). PIPE RELIEF OUTLET DISCHARGE TO NEAREST FLOOR DRAIN.
16. ALL PIPING, SYSTEMS, VALVES AND EQUIPMENT SHALL BE PROPERLY IDENTIFIED.
17. ALL HORIZONTAL DRAINAGE PIPING AND TRAPS FROM AN OPEN SIGHT DRAIN OR RECEPTORS RECEIVING A/C UNIT CONDENSATE SHALL BE INSULATED.
18. COLD WATER SUPPLY MAINS AND BRANCHES SHALL BE INSULATED IN ACCORDANCE WITH THE SPECIFICATIONS.
19. ALL PIPING VALVES, AND ACCESSORIES SERVING EQUIPMENT SHALL BE INSTALLED TO ALLOW SERVICING OR REMOVAL WITHOUT DISCONNECTING ALL PIPING ACCESSORIES.
20. ALL VALVES SHALL HAVE THEIR NORMAL (IN OPERATION) POSITION IDENTIFIED, SUCH AS "NORMALLY OPEN" OR "NORMALLY CLOSED".
21. EXPANSION LOOPS AND ANCHORS SHALL BE PROVIDED ON ALL PIPING SYSTEMS WHICH CROSS BUILDING EXPANSION JOINTS AND ALL HORIZONTAL AND VERTICAL PIPING LENGTHS EXCEEDING 100 FEET OR EACH PORTION THEREOF.
22. ALL ROUGH-IN AND FINAL CONNECTION FOR EQUIPMENT SPECIFIED BY OTHERS SHALL BE PROVIDED.
23. ALL EXPOSED PIPING AND FITTINGS SHALL BE CHROME PLATED.
24. WATER SERVICES FOR MOVABLE APPLIANCES SHALL BE CONNECTED WITH FLEXIBLE TUBING AND QUICK DISCONNECT COUPLINGS PROVIDED BY EQUIPMENT SUPPLIER.
25. ALL HORIZONTAL PIPING LINES EXTENDED AND CONNECTED TO EQUIPMENT SHALL BE INSTALLED AT THE HIGHEST POSSIBLE ELEVATION AND NOT LESS THAN 6" ABOVE FLOOR.
26. VERIFY EQUIPMENT LOCATIONS WITH OTHER CONSULTANTS OR SUPPLIERS BEFORE PROCEEDING WITH ANY ROUGH-IN.
27. ALL PIPING SHALL BE INSTALLED ABOVE CEILING OR IN A CONCEALED SPACE UNLESS NOTED OR INDICATED OTHERWISE.
28. CLEANOUTS SHALL BE PROVIDED AT THE BASE OF EACH SANITARY OR STORM WATER STACK.
29. SUPPLY TO ALL AIR AND OXYGEN OUTLETS SHALL BE 1/2" SUPPLY TO ALL VACUUM OUTLETS SHALL BE 3/4".
30. THOUGH SOME PIPING OFFSETS ARE INDICATED, IT IS NOT THE INTENT OF THE DRAWINGS TO SHOW ALL OFFSETS THAT ARE REQUIRED. THE CONTRACTOR SHALL FULLY COORDINATE THE PLUMBING WORK WITH THE WORK OF ALL OTHER TRADES TO PROVIDE COMPLETE SYSTEM WITHOUT INTERFERENCES.
31. REMOVE ALL EXISTING PIPING ABOVE CEILINGS OR EXPOSED NOT TO REMAIN IN USE. DISCONNECT ABANDONED PIPING IN WALLS OR BELOW SLAB FROM DISTRIBUTION SYSTEM.
32. CONTRACTOR SHALL FIELD VERIFY ALL EXISTING CONDITIONS INCLUDING EXISTING INVERTS, LOCATIONS AND SIZES OF PIPES, DUCTWORK, LIGHTING AND STRUCTURAL MEMBERS PRIOR TO CONSTRUCTION.

PLUMBING LEGEND

COLD WATER (CW)	
HOT WATER (HW)	
HOT WATER RECIRCULATION (HWR)	
CONDENSATE DRAIN LINE	CD
SANITARY PIPING	
STORM WATER PIPING	SW
VENT PIPING	
SPRINKLER PIPING	SP
FIRE LINE	F
COMPRESSED AIR	A
VACUUM	V
OXYGEN	O
MEDICAL AIR	MA
CHECK VALVE	
BALL VALVE	
BALANCING VALVE W/ FLOW METER FITTING (VENTURI TYPE)	
VALVE IN VERTICAL POSITION	
TEE	
WATER HAMMER ARRESTOR	
THERMOMETER	
UNION	
PIPING CAP	
HEAT TRACED AND INSULATED PIPE	
ROOF DRAIN	RD
FLOOR DRAIN	FD
FLOOR SINK	FS
WATER METER	M
PIPE GUIDE OR SLEEVE	
PIPE ANCHOR	
WALL HYDRANT	
PIPING ELBOW DOWN	
PIPING ELBOW UP	
PIPE CONNECTION BOTTOM	
PIPE CONNECTION TOP	
FLOOR CLEANOUT	CO
WALL CLEANOUT	CO
HOSE BIBB	
VENT THRU ROOF	
LIMIT OF DEMOLITION	
CONNECT TO EXISTING	
DOUBLE CHECK VALVE BACKFLOW PREVENTER	DCVBP
HOSE END VALVE	
WYE STRAINER W/HOSE END VALVE	
FLANGED CONNECTION	
GAUGE AND VALVE	
INLINE CIRCULATING PUMP	
TEMPERATURE/PRESSURE TEST PORT	

PLUMBING ABBREVIATIONS

ABOVE FINISHED FLOOR	AFF
AIR HANDLING UNIT	AHU
BREAK HORSEPOWER	BHP
COLD WATER (DOMESTIC)	CW
DESIGNATION	DESIG
EXISTING TO REMAIN	ETR
FEET	FT
FIRE DEPARTMENT VALVE	FDV
HORSEPOWER	HP
HOSE BIBB	HB
HOT WATER (DOMESTIC)	HW
HOT WATER RECIRCULATE	HWR
KILOWATT(S)	KW
POUNDS	LBS
MAXIMUM	MAX
THOUSAND BRITISH THERMAL UNITS PER HOUR	MBH
NORMALLY CLOSED	NC
NOT IN CONTRACT	NIC
NORMALLY OPEN	NO
REMOVE EXISTING	RX
REVOLUTIONS PER MINUTE	RPM
SANITARY	SAN

Additions: Date:

Revisions:

Consultants

BURDETTE KOEHLER MURPHY & ASSOCIATES, INC.
MECHANICAL / ELECTRICAL CONSULTING ENGINEERING
1416 CLARKVIEW ROAD
BALTIMORE, MARYLAND 21209
410.323.0600 – FAX 410.377.2543

RICKERT ENGINEERING, Inc.
STRUCTURAL ENGINEERING
8813 WALTHAM WOODS ROAD, SUITE 301
BALTIMORE, MARYLAND 21234
410.663.5110 – FAX 410.663.5114

BUILDING COST CONSULTANTS
COST ESTIMATING
12917 – 30TH AVENUE
PLATTSMOUTH, NEBRASKA 68048
402.298.8260 – FAX 402.298.8290

Seal:

ARCHITECTURE PLANNING ENGINEERING
POLT DESIGN GROUP
2215 CONOWINGO RD. 410.803.2141
Bel Air, Maryland 21015-1436 fax 410.836.6611
www.polt-design.com

Drawing Scale:

Drawing Start Date:

Drawing Finish Date:

Drawing Approved:

Drawing Title: PLUMBING LEGEND, GENERAL NOTES, & SCHEDULES

Approved: Associate Director for Operations:

Approved: Chief, Facilites Engineer:

Approved: Director, Medical Center:

Project Title: MRI SITE PREPERATION

Building No: 361

Checked: MAF

Drawn: CSR

Location: VAMHCS MEDICAL CENTER PERRY POINT, MD

Date: 06/30/14

Project No: 512-09-315

DRAWING NO: P100

Dwg. 25 Of 29

DEPARTMENT OF VETERANS AFFAIRS

BKM# 060310.090

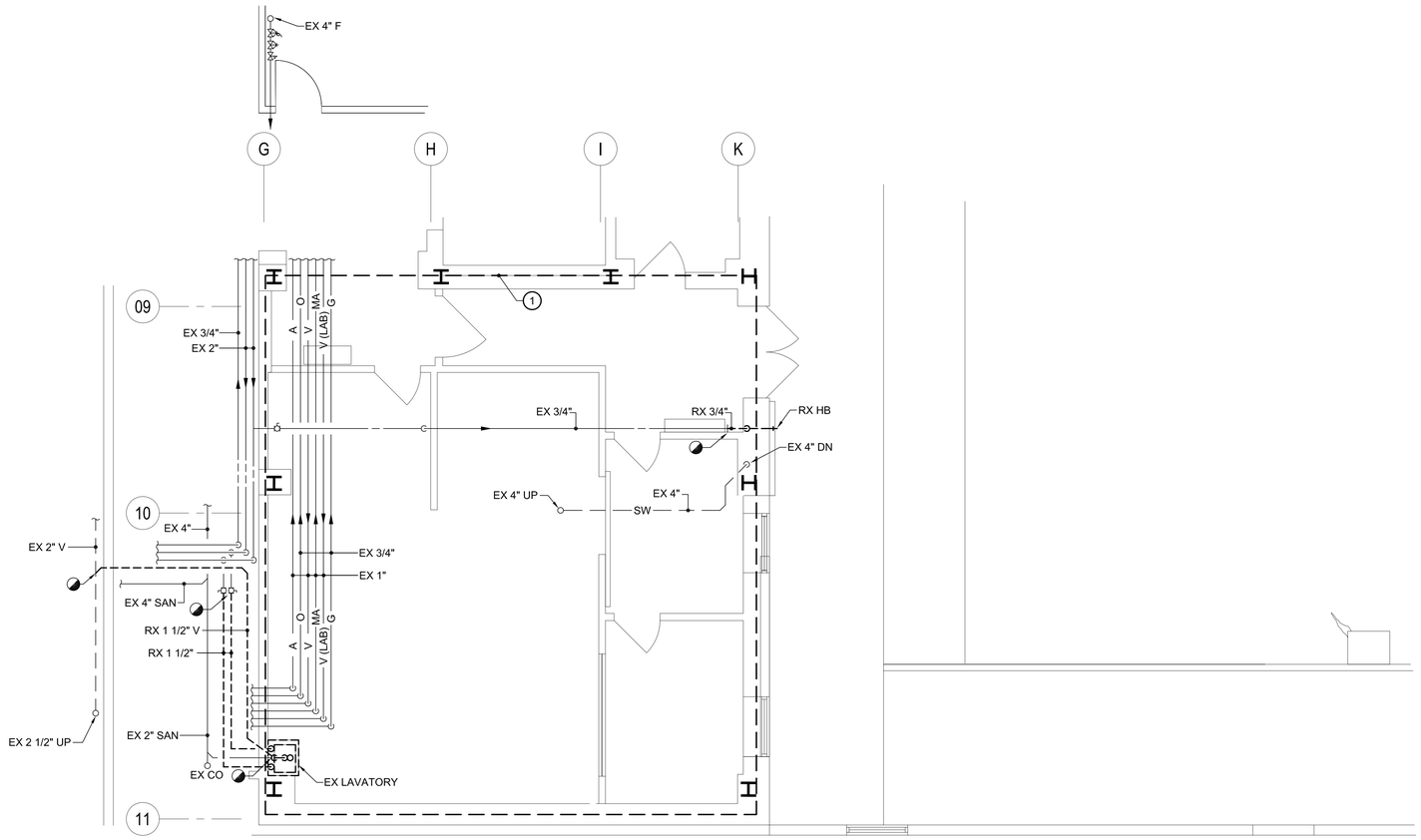

1 PART GROUND PLAN - PLUMBING - DEMOLITION

SCALE: 1/4 " = 1'-0"

GENERAL NOTES:

1. REFER TO M001 FOR MECHANICAL LEGEND, ABBREVIATIONS AND GENERAL NOTES.
2. SANITARY PIPING LOCATED BELOW SLAB ON GRADE UNLESS NOTED OTHERWISE.

DRAWING NOTES:

1. SPRINKLER AND FIRE PROTECTION REMOVAL WORK SHALL CONSIST OF REMOVAL OF ALL SPRINKLER HEADS AND BRANCH PIPING WITHIN THE RENOVATED AREA (APPROXIMATELY 1,150 SQUARE FEET). SPRINKLER MAINS MAY BE REUSED IF THE EXISTING SIZES MEET THE CURRENT REQUIREMENTS OF NFPA AND DO NOT INTERFERE WITH ANY NEW WORK (ARCHITECTURAL, MECHANICAL, ELECTRICAL).

KEYPLAN

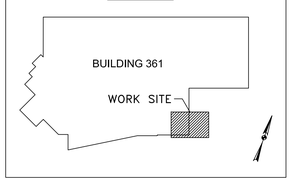

Additions:	Date:
Revisions:	

Consultants

BURDETTE KOEHLER MURPHY & ASSOCIATES, INC.
MECHANICAL / ELECTRICAL CONSULTING ENGINEERING
1416 CLARKVIEW ROAD
BALTIMORE, MARYLAND 21209
410.323.0600 – FAX 410.377.2543

RICKERT ENGINEERING, Inc.
STRUCTURAL ENGINEERING
8813 WALTHAM WOODS ROAD, SUITE 301
BALTIMORE, MARYLAND 21234
410.663.5110 – FAX 410.663.5114

BUILDING COST CONSULTANTS
COST ESTIMATING
12917 – 30TH AVENUE
PLATTSMOUTH, NEBRASKA 68048
402.298.8260 – FAX 402.298.8290

Seal:

ARCHITECTURE PLANNING ENGINEERING
POLT DESIGN GROUP
2215 CONOWINGO RD. 410.803.2141
Bel Air, Maryland 21015-1436 fax 410.836.6611
www.polt-design.com

Drawing Scale:
Drawing Start Date:
Drawing Finish Date:
Drawing Approved:

Drawing Title: PART GROUND FLOOR PLAN – PLUMBING – DEMOLITION
Approved: Associate Director for Operations:
Approved: Chief, Facilites Engineer:
Approved: Director, Medical Center:

Project Title: MRI SITE PREPERATION
Building No: 361
Checked: MAF
Drawn: CSR
Location: VAMHCS MEDICAL CENTER PERRY POINT, MD

Date: 06/30/14
Project No: 512-09-315
DRAWING NO: P101
Dwg. 26 Of 29

DEPARTMENT OF VETERANS AFFAIRS

BKM# 060310.090

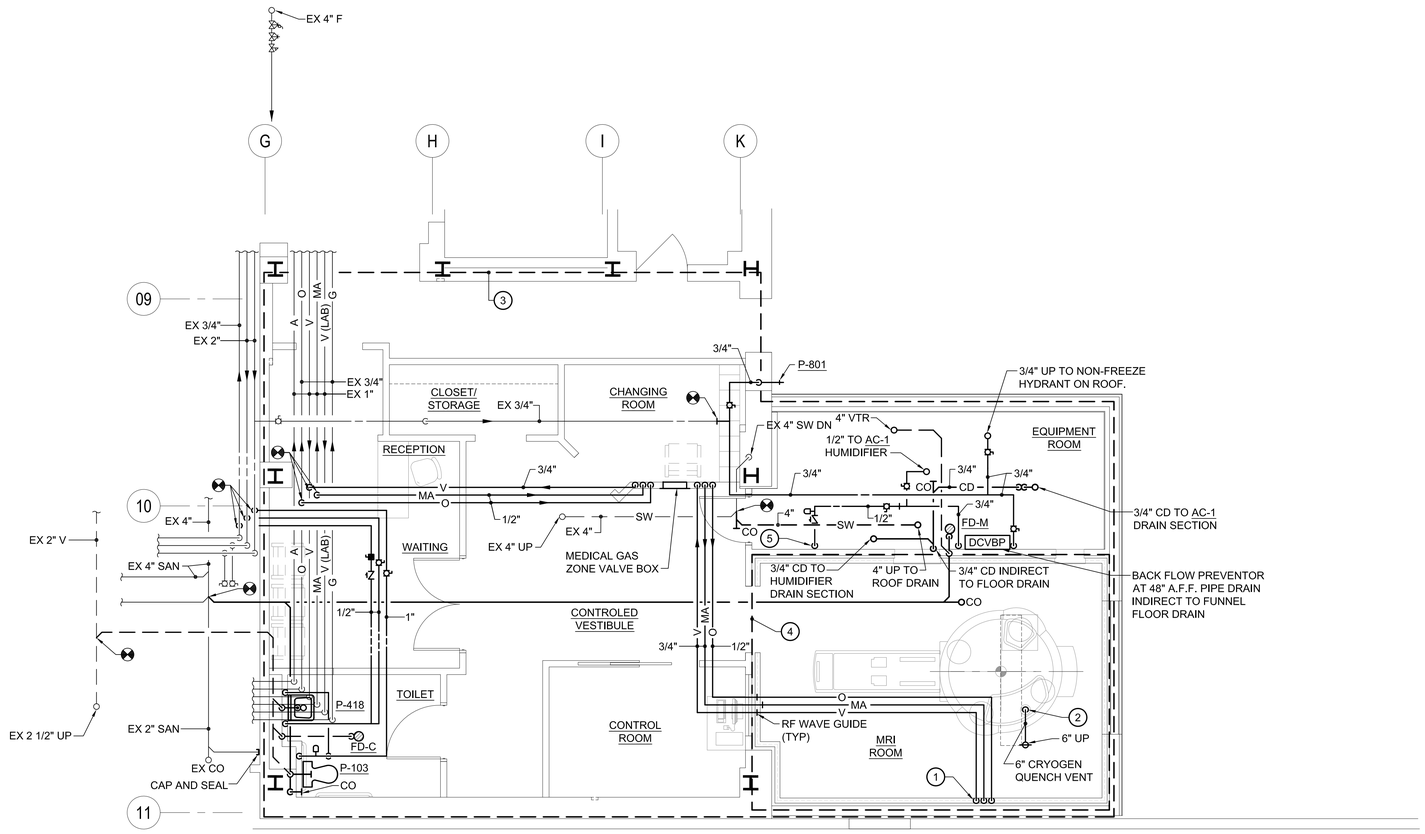

1 PART GROUND FLOOR PLAN - PLUMBING - NEW WORK

SCALE: 1/4 " = 1'-0"

GENERAL NOTES:

1. REFER TO P001 FOR PLUMBING LEGEND, ABBREVIATIONS AND GENERAL NOTES.
2. REFER TO SANITARY RISER DIAGRAM FOR SANITARY AND VENT PIPING SIZES.
3. SANITARY PIPING LOCATED BELOW SLAB ON GRADE, UNLESS NOTED OTHERWISE.

DRAWING NOTES:

1. 1/2" OXYGEN, 1/2" MEDICAL AIR, AND 3/4" VACUUM PIPING DOWN IN WALL TO MEDICAL GAS OUTLETS (1 OXYGEN, 1 MEDICAL AIR, 1 VACUUM). PSACE OUTLETS AT 8" ON CENTER. REFER TO ARCHITECTURAL DIVISION FOR ADDITIONAL REQUIREMENTS.
2. 6" CRYOGEN QUENCH VENT DOWN TO MRI EQUIPMENT HELIUM EXHAUST INTERFACE CONNECTION.
3. MODIFY EXISTING SPRINKLER SYSTEM SERVING THE RENOVATED AREA (APPROXIMATELY 1,800 SQUARE FEET). PROVIDE NEW QUICK RESPONSE SPRINKLER HEADS IN ALL AREAS TO PROVIDE PROPER SPRINKLER COVERAGE. LOCATION SHALL BE DESIGNED BY THE SPRINKLER CONTRACTOR IN ACCORDANCE WITH NFPA HAZARD OCCUPANCY REQUIREMENTS. COORDINATE HEAD LOCATIONS WITH EQUIPMENT, LIGHTING, FURNITURE, AND ALL OTHER TRADES.SPRINKLER HEADS SHALL BE LOCATED IN CENTER OF CEILING TILE. PIPING (BRANCH AND/OR MAINS) SHALL BE LOCATED AS REQUIRED TO COORDINATE WITH ALL NEW ARCHITECTURAL AND ELECTRICAL WORK. REFER TO SPECIFICATIONS FOR ADDITIONAL REQUIREMENTS.
4. PROVIDE NON-FERROUS (COPPER) PIPING IN MRI ROOM.
5. 1/2" DOMESTIC COLD WATER PIPING TO WALL-MOUNTED ELECTRIC HUMIDIFIER. PROVIDE 3/4" DRAIN PIPING FROM HUMIDIFIER PIPED INDIRECT TO FLOOR DRAIN.

KEYPLAN

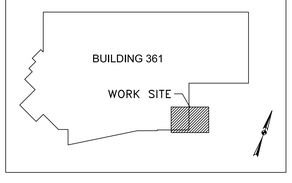

Additions:	Date:
Revisions:	

Consultants

BURDETTE KOEHLER MURPHY & ASSOCIATES, INC.
MECHANICAL / ELECTRICAL CONSULTING ENGINEERING
1416 CLARKVIEW ROAD
BALTIMORE, MARYLAND 21209
410.323.0600 – FAX 410.377.2543

RICKERT ENGINEERING, Inc.
STRUCTURAL ENGINEERING
8813 WALTHAM WOODS ROAD, SUITE 301
BALTIMORE, MARYLAND 21234
410.663.5110 – FAX 410.663.5114

BUILDING COST CONSULTANTS
COST ESTIMATING
12917 – 30TH AVENUE
PLATTSMOUTH, NEBRASKA 68048
402.298.8260 – FAX 402.298.8290

Seal:

ARCHITECTURE
PLANNING
ENGINEERING
POLT DESIGN GROUP
2215 CONOWINGO RD.
Bel Air, Maryland 21015-1436
410.803.2141
fax 410.836.6611
www.polt-design.com

Drawing Scale:
Drawing Start Date:
Drawing Finish Date:
Drawing Approved:

Drawing Title: PART GROUND FLOOR PLAN – PLUMBING – NEW WORK
Approved: Associate Director for Operations:
Approved: Chief, Facilites Engineer:
Approved: Director, Medical Center:

Project Title: MRI SITE PREPERATION
Building No: 361
Checked: MAF
Drawn: CSR
Location: VAMHCS MEDICAL CENTER PERRY POINT, MD

Date: 06/30/14
Project No: 512-09-315
DRAWING NO: P201
Dwg. 27 Of 29

DEPARTMENT OF VETERANS AFFAIRS

BKM# 060310.090

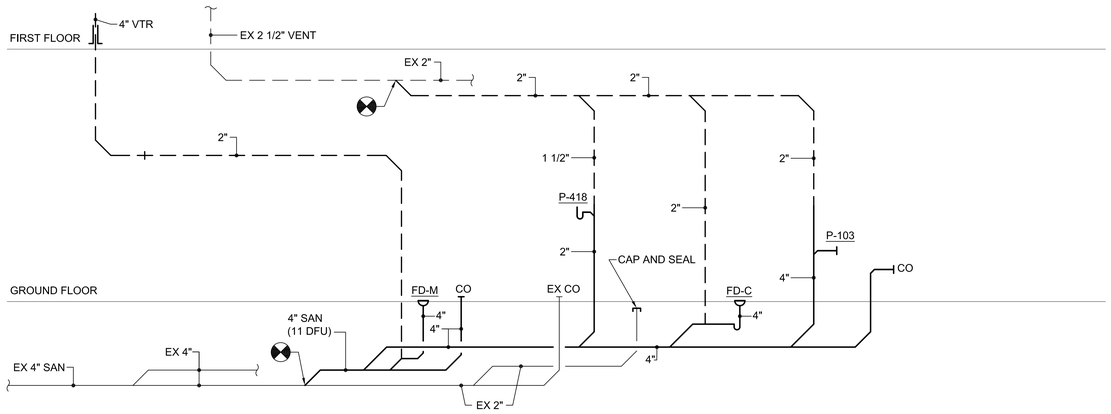

1 **SANITARY RISER DIAGRAM**
NO SCALE

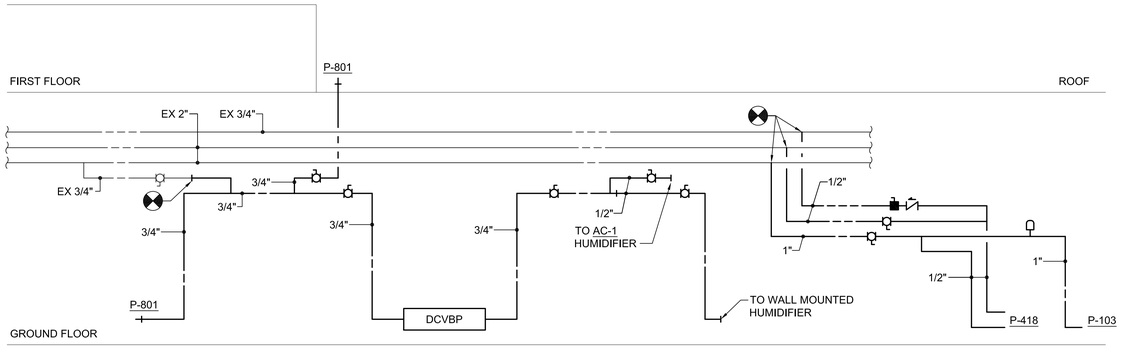

2 **DOMESTIC WATER RISER DIAGRAM**
NO SCALE

Additions:	Date:
Revisions:	

Consultants

BURDETTE KOEHLER MURPHY & ASSOCIATES, INC.
MECHANICAL / ELECTRICAL CONSULTING ENGINEERING
1416 CLARKVIEW ROAD
BALTIMORE, MARYLAND 21209
410.323.0600 – FAX 410.377.2543

RICKERT ENGINEERING, Inc.
STRUCTURAL ENGINEERING
8813 WALTHAM WOODS ROAD, SUITE 301
BALTIMORE, MARYLAND 21234
410.663.5110 – FAX 410.663.5114

BUILDING COST CONSULTANTS
COST ESTIMATING
12917 – 307H AVENUE
PLATTSMOUTH, NEBRASKA 68048
402.298.8260 – FAX 402.298.8290

Seal:

ARCHITECTURE
PLANNING
ENGINEERING

POLT DESIGN GROUP

2215 CONOWINGO RD.
Bel Air, Maryland 21015-1436
410.803.2141
fax 410.836.6611
www.polt-design.com

Drawing Scale:

Drawing Start Date:

Drawing Finish Date:

Drawing Approved:

Drawing Title:
PLUMBING RISING DIAGRAMS

Approved: Associate Director for Operations:

Approved: Chief, Facilites Engineer:

Approved: Director, Medical Center:

Project Title:
MRI SITE
PREPERATION

Building No: 361
Checked: MAF
Drawn: CSR

Location: VAMHCS MEDICAL CENTER
PERRY POINT, MD

Date: 06/30/14

Project No: 512-09-315

DRAWING NO:
P401
Dwg. 28 Of 29

DEPARTMENT OF VETERANS AFFAIRS

BKM# 060310.090

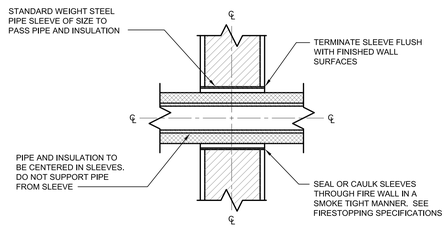

1 PIPE SLEEVE DETAIL

NO SCALE

PDD038

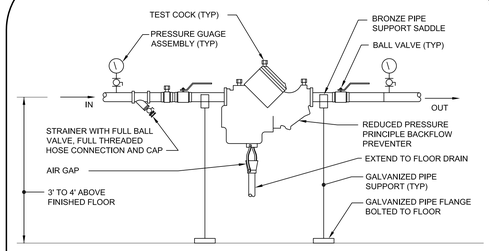

3/4" TO 2" APPLICATION

2 REDUCED PRESSURE PRINCIPLE BACKFLOW PREVENTERS

NO SCALE

PDD030A

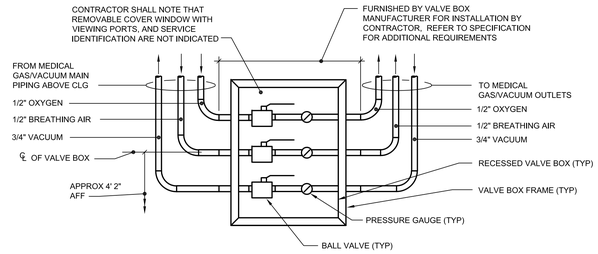

NOTE: PROVIDE TEST PORTS IN ACCORDANCE WITH NFPA 99.

3 TYPICAL MEDICAL GAS/VACUUM ZONE VALVE BOX ASSEMBLY DETAIL

NO SCALE

PDD015

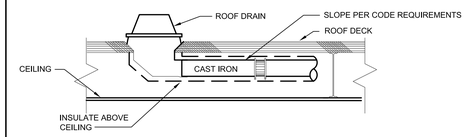

4 RAIN LEADER CONNECTION DETAIL

NO SCALE

PDD008

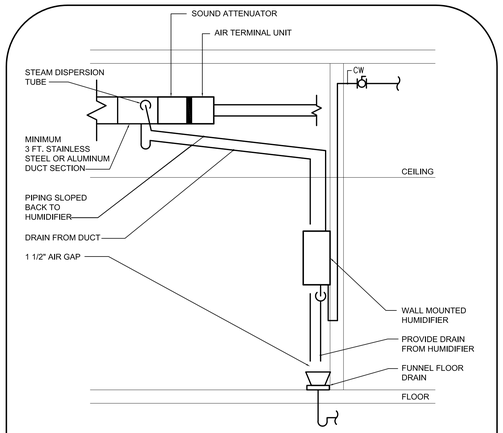

5 HUMIDIFIER DETAIL

NO SCALE

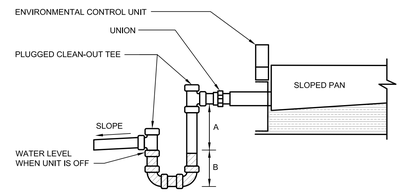

A = (TSP - ESP) x 1.0" + 1.0"

B = A x 0.5"

6 CONDENSATE DRAIN PIPING WITH DRAW THROUGH TRAP

NO SCALE

MCD058

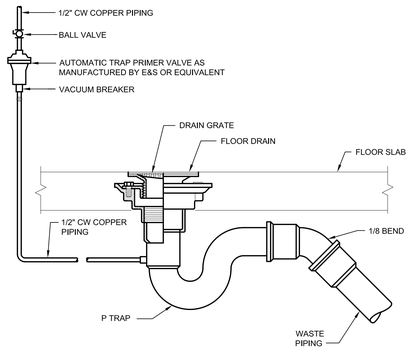

7 FLOOR DRAIN DETAIL

NO SCALE

PDD058

Additions:	Date:
Revisions:	

Consultants

BURDETTE KOEHLER MURPHY & ASSOCIATES, INC.
MECHANICAL / ELECTRICAL CONSULTING ENGINEERING
1416 CLARKVIEW ROAD
BALTIMORE, MARYLAND 21209
410.323.0600 – FAX 410.377.2543

RICKERT ENGINEERING, Inc.
STRUCTURAL ENGINEERING
8813 WALTHAM WOODS ROAD, SUITE 301
BALTIMORE, MARYLAND 21234
410.663.5110 – FAX 410.663.5114

BUILDING COST CONSULTANTS
COST ESTIMATING
12917 – 307H AVENUE
PLATTSMOUTH, NEBRASKA 68048
402.298.8260 – FAX 402.298.8290

Seal:

ARCHITECTURE
PLANNING
ENGINEERING

POLT DESIGN GROUP

2215 CONOWINGO RD. 410.803.2141
Bel Air, Maryland 21015-1436 fax 410.836.6611
www.polt-design.com

Drawing Scale:

Drawing Start Date:

Drawing Finish Date:

Drawing Approved:

Drawing Title: PLUMBING DETAILS

Approved: Associate Director for Operations:

Approved: Chief, Facilites Engineer:

Approved: Director, Medical Center:

Project Title: MRI SITE PREPERATION

Building No: 361

Checked: MAF

Drawn: CSR

Location: VAMHCS MEDICAL CENTER PERRY POINT, MD

Date: 06/30/14

Project No: 512-09-315

DRAWING NO: P501

Dwg. 29 Of 29

DEPARTMENT OF VETERANS AFFAIRS

BKM# 060310.090

Hitachi Medical Systems America, Inc.

1959 Summit Commerce Park
Twinsburg, OH 44087-2371
Phone: 330.425.1313 / 800.800.3106
Fax: 330.963.0749
www.hitachimed.com

OASIS Mark II - Standard Details

REVISED: 5/18/2012

It is the customer's responsibility to ensure that all appropriate design and construction personnel receive this document along with the HMSA site specific drawing for their project. This document contains information which is critical to the proper design and construction of a suite for the Hitachi OASIS system. The information contained herein is to be used in conjunction with the site specific drawing provided by HMSA.
Contact the Site Planning Department with questions regarding this guide.

Contents:

PAGE 01 of 27: Typical Planning Process
PAGE 02 of 27: Typical Planning Process (cont)
PAGE 03 of 27: General Siting Criteria
PAGE 04 of 27: Representative Suite Layout
PAGE 05 of 27: Minimum Suite Layout
PAGE 06 of 27: General Suite Criteria
PAGE 07 of 27: Floor Loading Structural
PAGE 08 of 27: RF and Magnetic Shielding
PAGE 09 of 27: Environmental
PAGE 10 of 27: Chiller Requirements
PAGE 11 of 27: Chiller Installation Checklist
PAGE 12 of 27: Chiller Installation Specifications
PAGE 13 of 27: Electrical - Lighting
PAGE 14 of 27: Electrical - Panel Schematic
PAGE 15 of 27: Electrical - General Notes
PAGE 16 of 27: Wireways
PAGE 17 of 27: Wireways (cont)
PAGE 18 of 27: Wireways (cont)
PAGE 19 of 27: Safety
PAGE 20 of 27: Cryogen Vent - Sizing
PAGE 21 of 27: Cryogen Vent - Notes
PAGE 22 of 27: Magnet Proximity
PAGE 23 of 27: Rigging and Delivery
PAGE 24 of 27: Gauss Fields
PAGE 25 of 27: System Components
PAGE 26 of 27: System Components (cont)
PAGE 27 of 27: Pre-Delivery Checklist

DOCUMENT ESTABLISHED - 04/30/2012
SPD-GDE-OAS2-1 DM# 84149 v2

OASIS Mark II REVISIONS

PREVIOUS REVISION - INITIAL RELEASE 04/30/2012

THIS REVISED OASIS STANDARD DETAIL SET CONTAINS UPDATED INFORMATION TO BE USED IN THE PLANNING OF A SUITE TO ACCOMMODATE THE HITACHI OASIS MRI SYSTEM. SOME PAGES HAVE BEEN REFORMATTED TO MORE CLEARLY PRESENT THIS INFORMATION. BELOW, PLEASE NOTE THOSE SPECIFIC MODIFICATIONS THAT SHOULD BE REVIEWED BY THE CUSTOMER'S DESIGN AND CONSTRUCTION PERSONNEL. THE CUSTOMER IS RESPONSIBLE FOR ENSURING THEIR OASIS SUITE IS BUILT TO THE REQUIREMENTS AND SPECIFICATIONS CONTAINED IN THIS DOCUMENT. THE MOST RECENT VERSION OF THIS DOCUMENT MAY BE FOUND AT www.hitachimed.com. CONTACT THE SITE PLANNING DEPARTMENT AT 800-800-3106 TO OBTAIN APPROPRIATE USER NAME AND PASSWORD.

MAY 18, 2012:

PG 6 OF 27: GENERAL SUITE CRITERIA
1) CORRECTED GANTRY WEIGHT

PG 7 OF 27: FLOOR LOADING STRUCTURAL
1) CORRECTED MAGNET WEIGHT PER FOOT AND TOTAL IN CHART

PG 10 OF 27: CHILLER REQUIREMENTS
1) REVISED NOTE 2b UNDER CUSTOMER/ GENERAL CONTRACTOR RESPONSIBILITIES

PG 27 OF 27: PRE-DELIVERY CHECKLIST
1) ADDED SITE NAME AND ADDRESS TO PG 3 OF CHECKLIST

HITACHI MEDICAL SYSTEMS AMERICA
1959 SUMMIT COMMERCE PARK TWINSBURG, OH 44087-2371
(800) 800-3106 WWW.HITACHIMED.COM

REVISIONS

DATE: 04/30/2012	REVISION: 05/18/12
OASIS MARK II STANDARD DETAILS	REVISIONS

TYPICAL PLANNING PROCESS

SITE SELECTION AND EVALUATION (3 WEEKS)

A) SITE SELECTION (1 WEEK)

1) **SALES:**
   a. SUBMITS COMPLETED/PARTIALLY COMPLETED SITE SELECTION SURVEY WITH CUSTOMER INFORMATION
   b. PROVIDES A SCALED DRAWING OR A DIMENSIONED SKETCH
   c. REQUESTS EVALUATION ASSISTANCE FROM SITE PLANNING
   d. PROVIDES AN OPPORTUNITY NUMBER
2) **SITE PLANNING:**
   a. RECORDS DATA AND ASSIGNS OPPORTUNITY TO A REGIONAL SITE PLANNER
   b. PROVIDES STANDARD DETAILS TO CUSTOMER AS REQUIRED
   c. PREPARES A PRELIMINARY EQUIPMENT LAYOUT WITH CLEARLY IDENTIFIED ISO-CENTER
   d. REVIEWS PRELIMINARY DATA FOR SITING CONCERNS
   e. SCHEDULES A SITE VISIT WITH THE CUSTOMER AND SALESPERSON, INCLUDING SITE TESTING

B) SITE EVALUATION (1 WEEK)

1) **SITE PLANNING:**
   a. VISITS SITE AND VERIFIES PREVIOUSLY SUBMITTED INFORMATION
   b. PREPARES A SITE EVALUATION REPORT WITH RECOMMENDATIONS AND FORWARDS IT TO THE SALESPERSON TO PRESENT TO THE CUSTOMER
   c. CONFIRMS SUITE DIMENSIONS, MODIFY AS NEEDED
   d. ASSISTS CUSTOMER / CONTRACTOR IN IDENTIFYING A 600 SF AREA TO BE DESIGNATED FOR CLEAN AND SECURE STORAGE OF COVERS AND ANCILLARY EQUIPMENT AT TIME OF DELIVERY
   e. COORDINATES AND COMPLETES SITE TESTING
   f . DISCUSSES CONCERNS WITH THE CUSTOMER (AND DESIGN TEAM / CONTRACTOR IF AVAILABLE)
   g. ASSIST IN IDENTIFYING POSSIBLE ALTERNATE LOCATIONS IF APPROPRIATE
   h. REVIEW STANDARD DETAILS WITH CUSTOMER (AND DESIGN TEAM / CONTRACTOR IF AVAILABLE)

NOTE:

1) **ALL TESTING MUST BE DONE DURING PERIODS OF TYPICAL ACTIVITY IN THE SURROUNDING AREA**
2) **ACTIVITY IN THE IMMEDIATE AREA OF THE PROBE MUST BE RESTRICTED DURING THE TEST**
3) **THERE ARE LIMITATIONS TO THE AMOUNT OF INTERFERENCE THAT THE OASIS MARK II SYSTEM CAN CORRECT FOR. IF THE INTERFERENCE(S) EXCEED CORRECTABLE LEVELS, THE FOLLOWING MAY BE REQUIRED.**
   a. DETERMINE AND ELIMINATE SOURCE OF INTERFERENCE
   b. INSTALL MAGNETIC SHIELDING
   c. SELECT NEW SITE

C) INFORMATION CONSOLIDATION (1 WEEK)

1) **SITE PLANNING:**
   a. REVISES PRELIMINARY DRAWING/SKETCH AS NEEDED
   b. SUBMITS TEST RESULTS AND CONFIRMED SITE DATA TO TECH SUPPORT FOR REVIEW
   c. PREPARES SITE EVALUATION REPORT AND VIA TELEPHONE, DISCUSS ACTIONS AND RECOMMENDATIONS WITH SALESPERSON

CUSTOMER REVIEW AND PRELIMINARY PLANS (VARIES)

A) SITE EVALUATION REPORT

1) **SALES:**
   a. REVIEWS THE REPORT WITH THE CUSTOMER (SITE PLANNING IS AVAILABLE VIA TELEPHONE IF NECESSARY)
   b. REVIEWS REVISED LAYOUT WITH THE CUSTOMER

B) SITE DRAWING AND DETAILS

1) **SITE PLANNING:**
   a. PREPARES A FINAL LAYOUT AND FOLLOWS UP ON THE SITE CONCERNS. THAT MAY INCLUDE:
      1. REQUESTING A MAGNETIC SHIELD DESIGN FOR FRINGE FIELD CONTROL
      2. REQUESTING A MAGNETIC SHIELD DESIGN TO CONTROL INTERFERENCE
      3. PROVIDING THE CUSTOMER WITH A CONTACT TO ADDRESS VIBRATION ISSUES

C) ON SITE MEETING (SCHEDULED BY CUSTOMER)

1) **SALES AND SITE PLANNING:**
   a. MEET WITH THE CUSTOMER AND THEIR DESIGN TEAM TO:
      1. REVIEW AND FINALIZE THE EQUIPMENT LAYOUT
      2. REVIEW STANDARD DETAILS
      3. ADDRESS OUTSTANDING QUESTIONS OR CONCERNS
      4. IDENTIFY PRELIMINARY DELIVERY SCHEDULE

PRE-CONSTRUCTION (VARIES)

A) ARCHITECT PREPARES CONSTRUCTION DRAWINGS

1. INPUT MUST BE COORDINATED WITH VARIOUS CONSULTANTS
   a. HMSA
   b. ENGINEERS (STRUCTURAL, HVAC, ELECTRICAL)
   c. RF SHIELDING VENDOR (REQUIREMENTS VARY WITH DIFFERENT VENDORS)

B) HMSA REVIEW OF ARCHITECTURAL DRAWINGS

1. IT IS HIGHLY RECOMMENDED THE ARCHITECT SEND BID OR PERMIT DOCUMENTS TO HMSA SITE PLANNING FOR GENERAL REVIEW TO HELP AVOID ERRORS OR OMISSIONS PRIOR TO CONSTRUCTION

NOTE: THIS IS A REVIEW AND NOT AN APPROVAL. HMSA ACCEPTS NO LIABILITY FOR ERRORS OR OMISSIONS. IT IS THE RESPONSIBILITY OF THE CUSTOMER AND THEIR DESIGN TEAM TO PREPARE THE SUITE TO MEET THE GUIDELINES PRESENTED IN THIS DOCUMENT

PRE-CONSTRUCTION (CON'T)

C) SELECTION OF CONTRACTOR

1. THE DRAWINGS GO OUT TO BID AND A GENERAL CONTRACTOR WILL BE CHOSEN BY THE CUSTOMER. THE CUSTOMER/ARCHITECT MUST PROVIDE SITE PLANNING WITH A CONTACT AND TELEPHONE NUMBER. THE ARCHITECT OR GENERAL CONTRACTOR IS RESPONSIBLE FOR SECURING THE BUILDING PERMITS DURING THIS TIME.

D) PRE-CONSTRUCTION MEETING (SCHEDULED BY CUSTOMER/ARCHITECT)

1. PLANS ARE REVIEWED AND OUTSTANDING QUESTIONS ARE ADDRESSED. A CONSTRUCTION SCHEDULE SHOULD BE AGREED UPON AT THIS MEETING AND A DELIVERY DATE IDENTIFIED. THE HMSA FIELD SERVICE ENGINEER WILL ALSO BE INTRODUCED TO THE CUSTOMER AND CONTRACTOR AT THIS MEETING.

SITE CONSTRUCTION (6-8 WEEKS)

A) ON SITE EVALUATION

1) **FIELD SERVICE ENGINEER:**
   a. VISITS SITE ON A ROUTINE BASIS TO VERIFY PROGRESS
   b. ADVISES SITE PLANNING OF SITE STATUS AND ANY CONCERNS
2) **SITE PLANNING:**
   a. ADDRESSES CONCERNS WITH ARCHITECT OR CONTRACTOR AS NEEDED
   b. COORDINATE AND SCHEDULE DELIVERY OF CHILLER IF PROVIDED BY HMSA

B) PRIOR TO DELIVERY

1. CUSTOMER CONTRACTED RIGGER PERFORMS ON-SITE INSPECTION 1-4 WEEKS PRIOR TO THE DELIVERY TO VERIFY OFF LOAD CONDITIONS.
2. CUSTOMER/CONTRACTOR INSTALLS R1200 CHILLER UNIT, COMPLETES INSTALLATION CHECKLIST AND RETURNS IT TO HASKRIS (SEE PG 11) AND SCHEDULES CHILLER STARTUP PRIOR TO DELIVERY DATE.
3. FINISH FLOORING MUST BE COMPLETELY INSTALLED. IT IS THE CUSTOMER/CONTRACTOR'S RESPONSIBILITY TO PROVIDE A PROTECTIVE COVERING (MASONITE IS RECOMMENDED) DURING THE INSTALLATION. IF FLOORING IS NOT INSTALLED PRIOR TO DELIVERY, IT MAY NOT BE LAID UNTIL AFTER THE OASIS MARK II INSTALLATION IS COMPLETE. FLOORING INSTALLED AFTER
   THE INSTALLATION, MUST BE TRIMMED AROUND THE BOTTOM OF THE SYSTEM COVERS AND MAY NOT BE SLID UNDER THEM. THE MAGNET WILL BE LIVE AND AT FIELD AT THAT TIME. NON FERROUS TOOLS WILL BE REQUIRED.
4. THE CUSTOMER OR THEIR AUTHORIZED REPRESENTATIVE IS RESPONSIBLE FOR ENSURING THE PRE-DELIVERY CHECKLIST IS FILLED OUT AND ALL ITEMS ARE EITHER COMPLETED OR SCHEDULED FOR COMPLETION PRIOR TO DELIVERY OF THE SYSTEM. THE CHECKLIST MUST BE SUBMITTED TO HMSA 14 DAYS PRIOR TO THE REQUESTED SYSTEM DELIVERY DATE. IF THE CHECKLIST ITEMS ARE NOT COMPLETED AS REQUIRED, THE DELIVERY MAY HAVE TO BE DELAYED.

NOTE: THE OASIS MARK II SYSTEM IS DELIVERED PRE-FILLED WITH CRYOGENS. THIS REQUIRES THAT THE CHILLER AND ELECTRICAL POWER BE OPERATIONAL AND READY FOR CONNECTION TO THE OASIS MARK II SYSTEM TO AVOID A POTENTIAL AND COSTLY BOIL-OFF.

HITACHI MEDICAL SYSTEMS AMERICA
1959 SUMMIT COMMERCE PARK TWINSBURG, OH 44087-2371
(800) 800-3106 WWW.HITACHIMED.COM

TYPICAL PLANNING PROCESS (CON'T)

SYSTEM DELIVERY AND INSTALLATION (3 WEEKS)

A) SYSTEM DELIVERY (1.5 WEEKS)

1) DAY 1

a. RIGGER DELIVERS AND SETS ALL MAJOR COMPONENTS. ANCILLARY COMPONENTS PLACED IN A SECURE STORAGE AREA DESIGNATED AND PROVIDED BY CUSTOMER (600 SF OF STORAGE AREA REQUIRED)

b. SYSTEM IS INVENTORIED BY RIGGER AND HMSA PERSONNEL

c. RIGGER DISPOSES OF CRATING AND PACKING MATERIAL IN CUSTOMER PROVIDED DUMPSTER (40 YARD REQUIRED. MUST BE EMPTIED MORNING OF DAY AFTER DELIVERY FOR ADDITIONAL DEBRIS DISPOSAL)

d. RF VENDOR CLOSES DELIVERY OPENING IN SHIELD AND MOUNTS FILTER PANELS (TYPICALLY MID/LATE AFTERNOON). PERFORMS FINAL TEST TO VERIFY SHIELD INTEGRITY AND PERFORMANCE.

e. BUILDING CONTRACTOR MAY BEGIN CLOSING MAGNET DELIVERY OPENING (END OF DAY)

2) DAY 2

a. BUILDING CONTRACTOR CLOSES AND SEALS MAGNET DELIVERY OPENING AND RF SHIELD

b. ELECTRICIAN ON SITE TO CONNECT BUILDING POWER TO RFIP CABINET IN EQUIPMENT ROOM

c. ELECTRICIAN INSTALLS ANY REMAINING WIREWAYS IN SCAN ROOM

d. SYSTEM CABLING BEGINS IN EQUIPMENT AND CONTROL ROOM

e. RUN OVERHEAD CABLES AND HELIUM LINES IN SCAN ROOM

f. START COLD HEAD OPERATION (FUNCTIONAL USE OF CHILLER)

3) DAY 3

a. COMPLETE EQUIPMENT ROOM CABLING

b. BEGIN SCAN ROOM CABLING

c. BUILDING CONTRACTOR COMPLETES REMAINING SCAN ROOM CLOSURE ITEMS

4) DAY 4

a. COMPLETE SCAN ROOM AND CONTROL ROOM CABLING

b. TOP OFF HELIUM IN MAGNET IN PREPARATION FOR RAMPING

c. **NO FURTHER BUILDING CONTRACTOR WORK MAY BE PERFORMED ONCE MAGNET RAMP-UP BEGINS**

5) DAY 5

a. BEGIN RAMP-UP (MAGNETIC FIELD NOW ACTIVE)

b. BEGIN MAGNET SHIM

6) DAY 6

a. COMPLETE MAGNET SHIM

b. INSTALL GRADIENTS

7) DAY 7

a. INSTALL SYSTEM (GANTRY) COVERS

8) DAY 8

a. TURN OASIS MARK II SYSTEM OVER TO TECHNICAL TEAM

B) TECHNICAL INSTALLATION (1.5 WEEKS)

1) COIL TUNING
2) SOFTWARE INSTALLATION AND TESTING
3) IMAGE QUALITY TESTING

APPLICATIONS TRAINING (2 WEEKS)

1) AN HMSA APPLICATIONS SPECIALIST WILL WORK WITH THE SITE'S TECHNOLOGISTS TO FAMILIARIZE THEM WITH THE OPERATION AND PROTOCOLS OF THE OASIS SYSTEM. TWO WEEKS ARE SCHEDULED FOR INITIAL APPLICATIONS TRAINING WHICH INCLUDES A LIMITED SCHEDULE OF SCANNING VOLUNTEERS AND PATIENTS.

TYPICAL PROJECT SCHEDULE

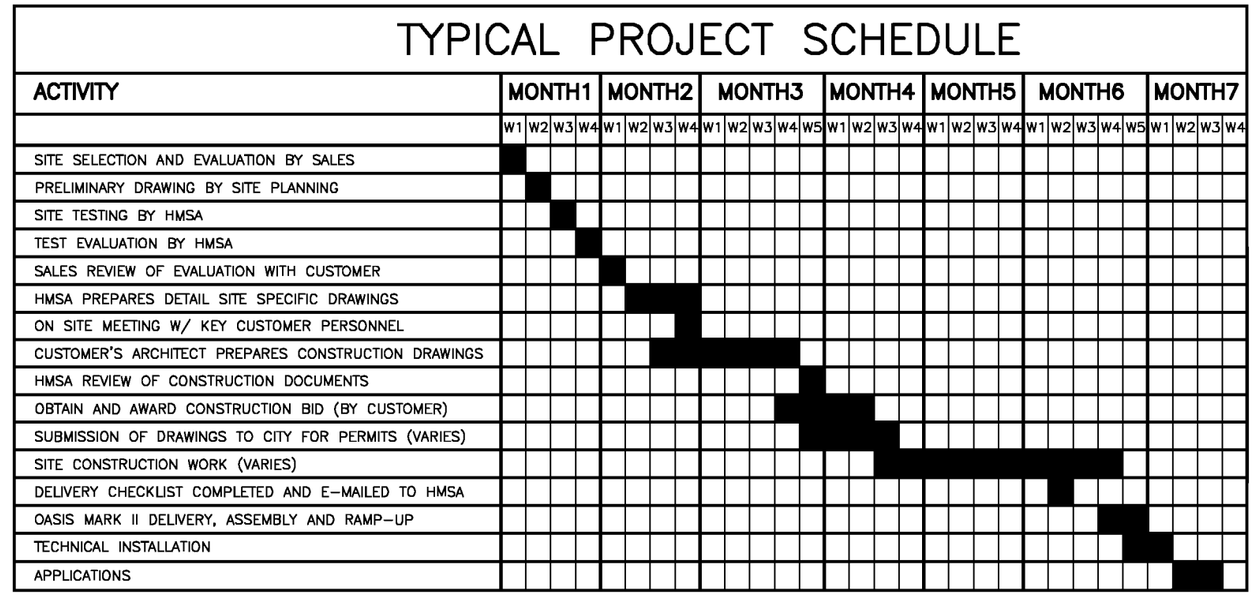

NOTE:

1) SITE PLANNING IS AVAILABLE FOR TELEPHONE CONSULTATION AT ALL TIMES THROUGHOUT THIS PROCESS.
2) STANDARD DETAILS WILL BE PROVIDED AT ANY TIME AND ARE AVAILABLE AT WWW.HITACHIMED.COM. CONTACT THE SITE PLANNING DEPARTMENT FOR CURRENT ACCESS CODES.
3) THE ABOVE ESTIMATED TIME FRAME SHOULD BE AMPLE TIME TO COMPLETE THE PROJECT AND ENSURE A TROUBLE FREE DELIVERY AND INSTALLATION. THIS TIME FRAME WILL VARY FROM SITE TO SITE. THIS IS AN ESTIMATE ONLY. HMSA WILL NOT BE HELD ACCOUNTABLE FOR ANY CONSTRUCTION DELAYS DUE TO CONTRACTORS NOT SUPPLIED BY HMSA. PLEASE NOTE THAT SOME STEPS CAN OCCUR CONCURRENTLY AS INDICATED ON THE GANT CHART ABOVE.

GENERAL SITING CRITERIA

SITE SELECTION

A. COORDINATION WITH THE ARCHITECT, ENGINEER, CONTRACTOR AND HMSA SITE PLANNING DEPARTMENT SHOULD BEGIN EARLY IN THE SITE PLANNING PROCESS.

B. FOR PROPER EVALUATION OF A SITE, A SET OF DRAWINGS OF THE PROPOSED OASIS MARK II LOCATION AND THE SURROUNDING AREA, ACCOMPANIED BY A COMPLETED SITE SELECTION SURVEY AND CONTACT LIST, SHOULD BE SENT TO HMSA SITE PLANNING FOR REVIEW.

C. THE FOLLOWING ITEMS SHOULD BE DISCUSSED WITH THE HMSA SITE PLANNING DEPARTMENT FOR A THOROUGH EVALUATION OF THE PROPOSED LOCATION.

1. LOCATION OF ANY MEDICAL IMAGING EQUIPMENT (CT, X-RAY, MAMMOGRAPHY, ULTRASOUND, NUCLEAR EQUIPMENT) OR COMPUTER EQUIPMENT IMMEDIATELY ADJACENT TO OR ABOVE / BELOW THE PROPOSED MRI SCAN ROOM.
2. LOCATION OF FRINGE FIELDS, PARTICULARLY THE 1.0 GAUSS FIELD OF ANY EXISTING OR FUTURE MRI SYSTEMS.
3. LOCATION OF ANY LARGE FERROUS MATERIAL (STRUCTURAL STEEL BEAMS, PIPES, DOORS, COLUMNS, ETC.) WITHIN 10 FEET IN ALL DIRECTIONS OF THE PROPOSED MAGNET ISOCENTER.
4. LOCATION OF EXISTING OR FUTURE AIR CONDITIONING UNITS, AIR HANDLERS, CHILLERS, CONDENSERS, OR ELECTRICAL SERVICE (50 AMPS OR HIGHER) WITHIN 20 FEET OF PROPOSED MAGNET ISOCENTER.
5. LOCATION OF ELECTRICAL SERVICE (200 AMP OR HIGHER), ANY ELECTRICAL OR MECHANICAL ROOMS, OR ANY ELEVATORS WITHIN 40 FEET OF THE PROPOSED MAGNET ISOCENTER.
6. LOCATION OF ANY HIGH VOLTAGE LINES IN THE AREA LESS THAN 200 FEET FROM PROPOSED MAGNET ISOCENTER.
7. LOCATION OF ANY VEHICULAR TRAFFIC, INCLUDING PARKING, WITHIN 40 LINEAR FEET OF THE PROPOSED MAGNET ISO-CENTER (NO MOVING STEEL WITHIN THE 1 GAUSS FIELD)
8. LOCATION OF ANY LARGE MOVING FERROUS OBJECTS (TRAINS, SUBWAYS, LOADING DOCK, ETC.) IN THE AREA.
9. LOCATION OF ANY ITEMS THAT COULD POTENTIALLY CAUSE VIBRATION AT THE SITE TO EXCEED THE OASIS MARK II VIBRATION SPECIFICATION. A VIBRATION TEST IS REQUIRED TO VERIFY SITE CONDITIONS.
10. THE ABILITY OF THE SELECTED LOCATION TO MEET THE VIBRATION AND INTERFERENCE REQUIREMENTS FOR AN MRI SUITE INTO THE FORESEEABLE FUTURE (TYPICALLY 8-10 YEARS)
11. SITE MUST MEET HMSA MAGNETIC FLUCTUATION SPECIFICATIONS FOR BOTH AC AND DC INTERFERENCE

PLANNING

A. TO MAXIMIZE THE PERFORMANCE OF THE OASIS MRI SYSTEM, CAREFUL PLANNING SHOULD TAKE PLACE FROM THE INITIAL SITE SELECTION STAGE, THROUGH DESIGN AND CONSTRUCTION, AND THROUGHOUT THE FINAL DELIVERY AND INSTALLATION PROCESS. PROPER PLANNING WILL HELP TO ENSURE HIGH SYSTEM PERFORMANCE STANDARDS, COMFORTABLE PATIENT HANDLING, AN EFFICIENT WORKING ENVIRONMENT, AND SUFFICIENT STORAGE SPACE. IT IS THE RESPONSIBILITY OF THE CUSTOMER'S DESIGN PROFESSIONALS TO ENSURE THAT THE FACILITY WILL COMPLY WITH BOTH RECOMMENDED AND GOVERNING REGULATIONS IN REGARD TO PATIENT PRIVACY AND SAFETY ISSUES.

B. IN GENERAL, THE FOLLOWING SHOULD BE CONSIDERED WHEN DESIGNING AN MRI SUITE:

1. THE 5 GAUSS FIELD MUST BE RESTRICTED FROM PUBLIC ACCESS. ACCESS RESTRICTIONS AND SIGNAGE MUST BE IN PLACE AS REQUIRED BY FDA REGULATIONS.
2. THE MRI SCAN ROOM SHOULD BE LOCATED NEAR THE EXTERIOR OF THE BUILDING WHEN POSSIBLE TO FACILITATE DELIVERY. REFER TO THE RIGGING AND DELIVERY PAGE FOR ADDITIONAL DETAILS.
3. A MINIMUM 3'-6"W X 7'-0"H FLAT ACCESS PATH TO THE OASIS MARK II SUITE MUST BE PROVIDED FOR THE DELIVERY OF CRYOGEN DEWARS. THIS PATH WILL BE USED THROUGHOUT THE LIFE OF THE SYSTEM AS PART OF ITS ROUTINE MAINTENANCE.
4. ALL DOORS MUST BE A MINIMUM OF 36" WIDE (34 1/2" CLEAR OPENING STOP TO STOP). THE DOOR MUST BE ABLE TO BE OPENED IN SUCH A MANNER THAT A STRAIGHT PATHWAY THROUGH THE DOOR FRAME IS NOT OBSTRUCTED IN ANY WAY BY THE DOOR'S HANDLE, PUSH BAR, HINGES, OTHER ACCESSORIES OR THE DOOR SLAB ITSELF.
5. FULL HELIUM DEWARS AND OTHER SERVICE EQUIPMENT (RAMP POWER SUPPLY, GRADIENT LOADER) CAN WEIGH UP TO 800 LBS. DEWARS AND OTHER SIMILARLY HEAVY COMPONENTS WILL OCCASIONALLY BE REQUIRED TO SERVICE THE SYSTEM OVER IT'S LIFETIME. CONSIDERATION SHOULD BE GIVEN TO SELECTING FLOORING MATERIAL IN THE SCAN ROOM AND ALONG ALL ACCESS PATHS THAT WILL NOT BE AFFECTED BY THE POINT LOADS GENERATED BY SMALL WHEELS ON SUCH COMPONENTS BEING ROLLED ACROSS IT.
6. CONVENIENCE OUTLETS MUST BE LOCATED IN THE MRI SCAN ROOM AND THROUGHOUT THE SUITE FOR SERVICE.
7. IT IS THE CUSTOMER'S RESPONSIBILITY TO MEET THE HMSA SPECIFICATIONS REGARDING THE ELECTRICAL SERVICE TO THE SYSTEM. IN REVIEWING POWER FOR THE SUITE, CONSIDERATION SHOULD BE GIVEN TO THE OPERATION OF THE SUPPORT FUNCTIONS. REFER TO THE ELECTRICAL SECTION OF THIS GUIDE FOR ADDITIONAL SPECIFICATIONS.
8. THE ROOMS MUST BE SUFFICIENTLY SIZED TO ACCOMMODATE WORK ACTIVITIES AND SERVICE ACCESS FOR ALL EQUIPMENT.
9. ALTHOUGH IT MAY BE LOCATED REMOTELY, A LASER IMAGER SHOULD BE LOCATED NEAR THE OPERATOR FOR CONVENIENCE. THE LASER IMAGER IS CUSTOMER PROVIDED AND MUST BE ACCESSIBLE VIA THEIR NETWORK.

OPERATIONS

A. STRONG VISUAL CONTACT BETWEEN THE OPERATOR AND THE PATIENT MUST BE MAINTAINED.
B. SUFFICIENT AND CONVENIENT WORK SURFACES AND STORAGE MUST BE INCLUDED IN AND NEAR THE MRI SCAN AND CONTROL ROOMS. VIEW BOXES SHOULD BE CONSIDERED IN THE CONTROL ROOM.
C. A SINK SHOULD BE LOCATED NEARBY, BUT IS NOT RECOMMENDED IN THE MRI SCAN ROOM UNLESS REQUIRED BY CODE. SINKS PLACED IN THE MRI SCAN ROOM MUST BE COORDINATED WITH THE RF VENDOR.
D. THE ENVIRONMENT WITHIN THE SCAN SUITE MUST BE MAINTAINED 24 HOURS PER DAY, 7 DAYS PER WEEK. REFER TO THE ENVIRONMENTAL SECTION OF THIS GUIDE FOR SPECIFICATIONS REGARDING ALLOWABLE RANGES FOR TEMPERATURE AND HUMIDITY.

PATIENT COMFORT AND HANDLING

A. TO FACILITATE PATIENT HANDLING AND PROVIDE FOR PATIENT SAFETY, THE FOLLOWING SHOULD BE CONSIDERED IN THE DESIGN OF THE MRI SUITE:
   1. THE PATH FOR PATIENT ACCESS INTO THE MRI SCAN ROOM SHOULD ACCOMMODATE A STRETCHER OR GURNEY.
   2. THERE SHOULD BE SUFFICIENT AREA AROUND THE PATIENT TABLE IN THE MRI SCAN ROOM FOR COMFORTABLE PATIENT HANDLING.
   3. ANCILLARY FUNCTIONS (DRESSING ROOMS, TOILETS, HOLDING AREAS, PREP ROOMS, ETC.) SHOULD BE LOCATED NEAR THE MRI SCAN ROOM.
   4. THE OPERATOR SHOULD HAVE DIRECT ACCESS TO THE PATIENT.

FLOOR SPACE

A. THE HMSA OASIS MARK II SYSTEM HAS BEEN SPECIFICALLY DESIGNED TO BE SITED WITHIN AN EXISTING FACILITY. THE STANDARD SYSTEM (EXCLUDING THE CHILLER) CAN BE EASILY SITED WITHIN THE 702 SQUARE FOOT AREA SHOWN.

MAGNETIC FIELDS

A. AS WITH ALL MRI SYSTEMS, A MAJOR CONCERN IN PLANNING IS ACCOMMODATING THE SYSTEM'S MAGNETIC FIELD. THIS FIELD WILL AFFECT MAGNETICALLY SENSITIVE INSTRUMENTS AND CAN BE AFFECTED BY FERROMAGNETIC MATERIALS IN THE SURROUNDING AREA. THE SIZE OF THE FRINGE FIELD IS DETERMINED BY THE STRENGTH AND TYPE OF THE MAGNET.
B. MAGNETIC SHIELDING CAN BE DESIGNED TO REDUCE THE DISTANCE THE GAUSS FIELDS EXTEND FROM THE OASIS MARK II GANTRY OR TO DAMPEN FLUCTUATIONS CREATED BY THE ENVIRONMENT SURROUNDING THE SCAN ROOM. HMSA WILL PROVIDE A DESIGN FOR THE MAGNETIC SHIELDING IF IT IS NECESSARY AND FORWARD THE SPECIFICATIONS TO THE CUSTOMER'S RF SHIELDING VENDOR. CONTACT HMSA SITE PLANNING DEPARTMENT FOR FURTHER INFORMATION.

COMMUNICATIONS

A. TELEPHONES WITH ACCESS TO AN OUTSIDE LINE MUST BE LOCATED IN THE EQUIPMENT AND CONTROL ROOMS TO FACILITATE APPLICATIONS / SERVICE SUPPORT.
B. TELEPHONE AND NETWORK CONNECTIONS ARE NOT PERMITTED IN THE SCAN ROOM
C. A DATA PORT WITH A BROAD BAND CONNECTION TO THE INTERNET MUST BE LOCATED AT THE OPERATOR CONSOLE AREA. THIS CONNECTION WILL BE USED FOR REMOTE DIAGNOSTICS AND MONITORING OF THE OASIS MARK II SYSTEM (SEE HITACHI SENTINEL REMOTE, BELOW). THE CONNECTION MAY BE THROUGH THE SITE'S NETWORK, ASSURING THE OASIS MARK II IS ADDRESSABLE VIA THE INTERNET.
D. IN ORDER TO MAINTAIN A TIMELY INSTALLATION SCHEDULE, **THE FOLLOWING INFORMATION MUST BE SENT TO: InstallChecklistGroup@hitachimed.com PRIOR TO THE DELIVERY OF THE OASIS MARK II SYSTEM.**

1. MANUFACTURER AND SOFTWARE REVISION LEVEL FOR THE PACS SYSTEM
2. MANUFACTURER, MODEL AND SOFTWARE REVISION LEVEL FOR THE DICOM PRINTER
3. MANUFACTURER AND SOFTWARE REVISION LEVEL FOR RIS/MODALITY WORKLIST SERVER
4. SITE ADDRESS
5. NAME AND TELEPHONE NUMBER FOR THE SITE'S NETWORK ADMINISTRATOR.

HITACHI SENTINEL REMOTE

A. HITACHI SENTINEL REMOTE IS USED TO MONITOR, ACCESS AND REMOTELY DIAGNOSE THE OASIS MARK II MRI SYSTEM. FOR A COMPLETE AND UP TO DATE DESCRIPTION OF ALL OF THE SENTINEL REMOTES FUNCTIONS AND FEATURES, CONTACT A HITACHI SALES REPRESENTATIVE.
   1. **SECURITY** - SENTINEL SERVERS ARE INSTALLED AT EXCLUSIVE DATA CENTERS THAT ARE MONITORED 24/7 BY SECURITY CAMERAS AND REQUIRE BIOMETRIC IDENTIFICATION FOR ENTRY.
      a. COMMUNICATION IS ENCRYPTED USING SSL (SECURE SOCKET LAYERING) TO PROVIDE SECURITY
      b. POLLING BETWEEN THE MRI SYSTEM AND THE SENTINEL SERVER IS PERFORMED REGULARLY. ONLY DEVICES THAT COMPLETE TWO WAY AUTHENTICATION ARE ABLE TO COMMUNICATE WITH THE OASIS MARK II SYSTEM.
      c. THE OASIS MARK II SYSTEM WILL ATTEMPT TO AUTHENTICATE ONLY WHEN IT HAS INITIATED THE COMMUNICATION.
   2. **REQUIREMENTS** - THE FOLLOWING CUSTOMER SUPPLIED AND INSTALLED ITEMS ARE REQUIRED TO INTERFACE THE OASIS MARK II MRI SYSTEM WITH SENTINEL REMOTE
      a. INTERNET: T1 LINE OR FASTER
      b. ETHERNET CABLE CONNECTION: CATEGORY 5, 1OOBase-TX OR CATEGORY 6, 1000Base-T
      c. FIREWALL: THE FIREWALL ROUTER MUST BE CAPABLE OF CONFIGURING NETWORK ADDRESSES AND PORTS TO SPECIFIC IP ADDRESSES FOR INBOUND AND OUTBOUND INFORMATION EXCHANGE.
         i. ONLY DEVICES THAT COMPLETE TWO WAY AUTHENTICATION ARE ABLE TO COMMUNICATE WITH THE OASIS SYSTEM
         ii. THE OASIS MARK II MRI SYSTEM IS ONLY PERMITTED TO ESTABLISH EXTERNAL SESSIONS WITH THE SENTINEL SERVER
         iii. ONLY HTTPS AND HTTP PROTOCOLS ARE PERMITTED
         iv. NETSCREEN-5GT IS THE RECOMMENDED FIREWALL (OR SIMILAR)

REPRESENTATIVE SUITE LAYOUTS

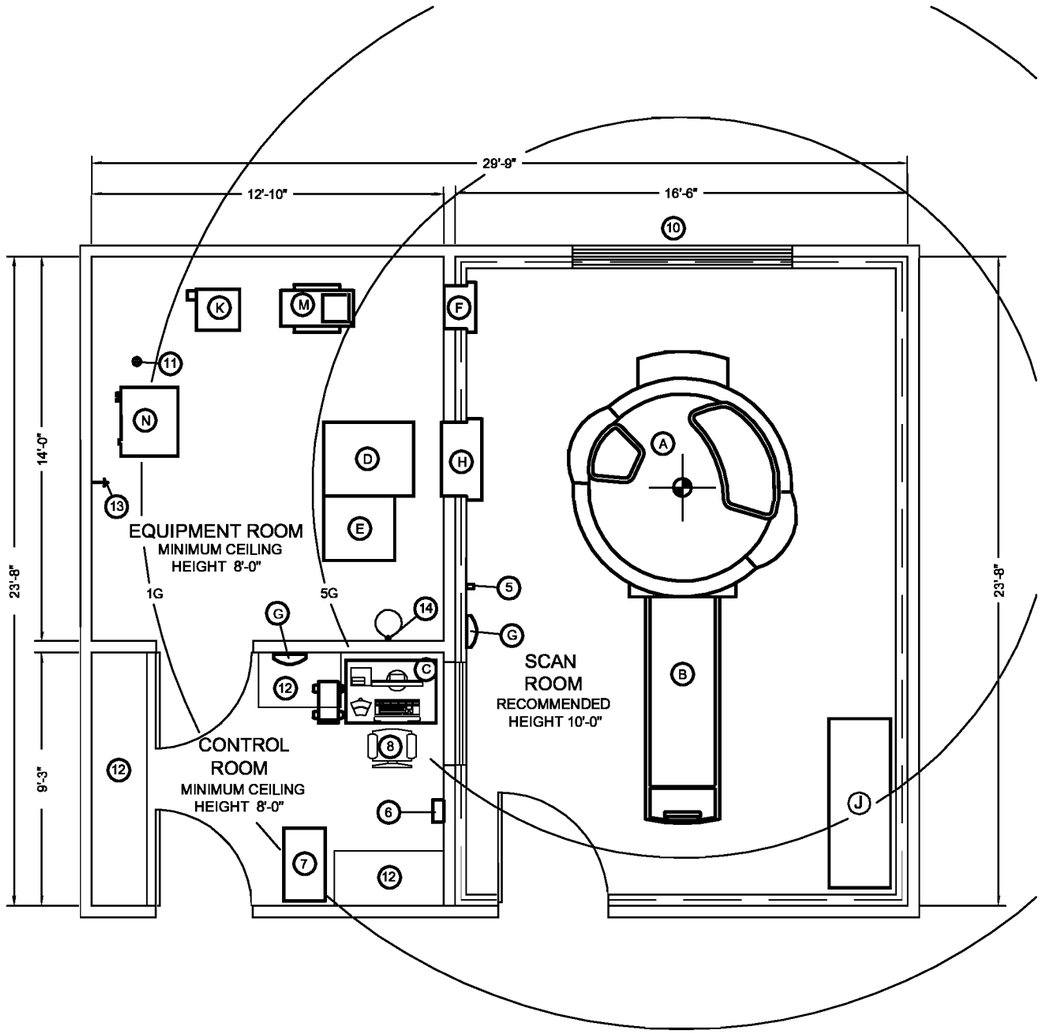

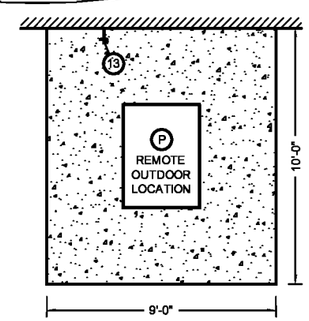

TYPICAL FLOOR PLAN - 702 SQ FT

"NOT TO SCALE"

LEGEND

- RF SHIELD. ARCHITECT TO VERIFY WALL CONSTRUCTION WITH RF VENDOR. (TYPICAL 5" RF WALL THICKNESS REFLECTED.)
- RF VIEW WINDOW, TYPICALLY 4'w X 3'h (TYP 36" AFF)
- EQUIPMENT ACCESS PANEL FOR DELIVERY OF THE SYSTEM. MINIMUM 8'-6"w X 8'-6"h.
- JUNCTION BOX FOR AC POWER.
- 480V, 30A, 3PH, 4 WIRE, NEMA L16-30R FOR USE WITH RAMP-UP TOOL
- 120V, 20 AMP CONVENIENCE OUTLETS, AT LEAST ONE PER WALL REQUIRED FOR SERVICE AND MAINTENANCE.
- PHONE LINES - ONE (1) REQUIRED IN EQUIPMENT ROOM AND ONE (1) REQUIRED IN THE CONTROL ROOM.
- DATA PORT FOR BROAD BAND NETWORK CONNECTION TO A STANDARD 1G BASE-T LINE. MAY BE THROUGH CUSTOMER'S IN-HOUSE NETWORK.
- 6" X 24" ON-WALL WIREWAY WITH REMOVABLE COVER AND THREE (3) DIVIDERS. METAL ONLY. MUST BE NON-FERROMAGNETIC IN SCAN ROOM.
- 6" X 24" ON-FLOOR WIREWAY WITH REMOVABLE COVER AND THREE (3) DIVIDERS. METAL ONLY. MUST BE NON-FERROMAGNETIC IN SCAN ROOM.
- 6" X 3" OVERHEAD CABLE TRAY (WALKER SPMA-A-6-3S OR EQ). MUST BE NON-FERROMAGNETIC.
- MAGNET ISOCENTER

EQUIPMENT BY HMSA

- (A) OASIS MARK II GANTRY
- (B) PATIENT TABLE
- (C) OPERATOR'S WORKSTATION
- (D) RFIP CABINET
- (E) GCPA CABINET
- (F) MCU FILTER PANEL
- (G) EMERGENCY RUN-DOWN BUTTON (ERDU)
- (H) RFIP FILTER PANEL
- (J) COIL STORAGE CABINET
- (K) HELIUM COMPRESSOR
- (M) SENSE UNIT
- (N) HEAT EXCHANGER
- (P) R1200 OUTDOOR CHILLER

EQUIPMENT/ACCESORIES BY OTHERS

- (2) 6" X 24" ON-WALL WIREWAY
- (3) 6" X 24" ON-FLOOR WIREWAY
- (4) A.C.POWER PANEL (SIZED PER CODE)
- (5) OXYGEN PROBE
- (6) OXYGEN MONITOR
- (7) LASER IMAGER
- (8) CHAIR
- (9) 1 3/4" WAVE GUIDES
- (10) DELIVERY ACCESS PANEL
- (11) FLOOR DRAIN
- (12) CASEWORK
- (13) HOSE BIBB
- (14) HELIUM TANK RESTRAINT
- (15) 3 1/2" x 6" OVERHEAD CABLE TRAY

NOTE: - SOME EQUIPMENT/ACCESSORIES BY OTHERS MAY NOT BE SHOWN ON TYPICAL LAYOUTS

HITACHI MEDICAL SYSTEMS AMERICA
1959 SUMMIT COMMERCE PARK TWINSBURG, OH 44087-2371
(800) 800-3106 WWW.HITACHIMED.COM

REPRESENTATIVE SUITE LAYOUTS

DATE: 04/30/2012 | REVISION: 05/18/2012

REPRESENTATIVE SUITE LAYOUTS

NOTES

1. 480V, 30A, 3PH, 4 WIRE, NEMA L16-30R RECEPTACLE FOR USE WITH RAMP-UP TOOL TO INITIALIZE MAGNETIC FIELD. OASIS SYSTEM DRAWS ONLY MINIMAL POWER DURING INITIALIZATION OF FIELD. RAMP-UP TOOL LOAD SHOULD NOT BE INCLUDED WHEN CALCULATING TOTAL LOAD ON PANEL FROM WHICH THE OASIS MRI SYSTEM DRAWS ITS POWER.

2. IN ORDER TO ENSURE ADEQUATE CLEARANCE TO INSERT THE TRANSFER LINE INTO THE HELIUM DEWARS, A 2'x2' AREA WITH A MINIMUM CLEAR HEIGHT OF 10'-6" MUST BE PROVIDED EITHER IN, OR IN CLOSE PROXIMITY TO THE SCAN ROOM. THIS CLEARANCE MAY BE OBTAINED VIA THE REMOVAL OF A DROP-IN CEILING TILE. UNDER NORMAL OPERATING CONDITIONS, AFTER THE INITIAL MAGNET FILL, HELIUM REPLENISHMENT OCCURS ONLY ONCE EVERY 12-24 MONTHS.

3. OUTSIDE OF THE GANTRY SERVICE AREA MARKED "MIN. CLG HEIGHT THIS AREA 9'-4", THE MINIMUM SCAN ROOM CEILING HEIGHT IS 8'-0". ANY CEILING OR OTHER OBSTRUCTION WITH A HEIGHT OF LESS THAN 8'-6" ALONG THE DELIVERY PATH WILL NEED TO BE REMOVED FOR THE DELIVERY OF THE OASIS GANTRY

4. ALL DOORS IN THE DEWAR AND SERVICE EQUIPMENT DELIVERY PATH MUST BE A MINIMUM OF 36" WIDE (34 1/2"CLEAR OPENING STOP TO STOP). THE DOORS MUST BE ABLE TO OPEN IN SUCH A MANNER THAT A STRAIGHT PATHWAY THROUGH THE DOOR FRAME IS NOT OBSTRUCTED IN ANY WAY BY THE HANDLE, PUSH BAR, HINGES, OTHER ACCESSORIES OR THE DOOR SLAB ITSELF.

5. A CLEAN AND SECURE STORAGE AREA OF APPROXIMATELY 600 SF (20' X 30') IS REQUIRED FOR SYSTEM COVERS AND ANCILLARY EQUIPMENT AT THE TIME OF DELIVERY. THIS AREA SHOULD BE NEAR AND HAVE CONVENIENT ACCESS FROM THE OASIS SUITE. THIS STORAGE AREA IS TYPICALLY EMPTIED OF HMSA MATERIALS BY THE END OF THE SECOND WEEK OF THE SYSTEM INSTALLATION. ADDITIONALLY, SECURE STORAGE, EITHER INDOOR OR OUTDOOR, WILL BE NEEDED FOR UP TO SIX (6) HELIUM DEWARS DURING THE FIRST TWO WEEKS AFTER DELIVERY. A LEVEL ACCESS PATH FROM THIS STORAGE AREA TO THE SCAN ROOM IS REQUIRED.

6. CUSTOMER'S ARCHITECT IS RESPONSIBLE FOR VERIFYING ALL POWER AND HVAC SPECIFICATIONS FOR EQUIPMENT NOT SUPPLIED BY HMSA.

7. THIS DRAWING IS NOT FOR CONSTRUCTION PURPOSES. CUSTOMER IS RESPONSIBLE FOR HIRING QUALIFIED DESIGN PROFESSIONALS TO PREPARE CONSTRUCTION DOCUMENTS. CONSTRUCTION SHALL BE PERFORMED IN ACCORDANCE WITH ALL APPLICABLE CODES AND REGULATIONS.

8. HMSA RESERVES THE RIGHT TO HOLD THE APPROVAL OF A SITE PENDING AN ON-SITE REVIEW AND APPROPRIATE QUALIFICATION TESTING BY HMSA PERSONNEL.

9. CONSTRUCTION DRAWINGS ARE TO BE SUBMITTED TO THE HMSA SITE PLANNING DEPARTMENT FOR REVIEW PRIOR TO CONSTRUCTION.

10. THE LAYOUTS ON THESE PAGES ARE REPRESENTATIVE OF A TYPICAL AND MINIMUM SIZE OASIS SUITE. FINAL SUITE CONFIGURATION IS DEPENDENT ON PHYSICAL SITE CONDITIONS AND MAY VARY FROM THOSE SHOWN. CONTACT THE SITE PLANNING DEPARTMENT AT 800-800-3106 FOR ASSISTANCE.

11. THESE DRAWINGS ARE THE PROPERTY OF HITACHI MEDICAL SYSTEMS AMERICA, INC. (HMSA) AND ARE NOT FOR CONSTRUCTION PURPOSES. THE DRAWINGS IN THESE STANDARD DETAILS ARE TO BE USED BY THE CUSTOMER'S DESIGN PROFESSIONALS TO PREPARE APPROPRIATE CONSTRUCTION DOCUMENTS. HMSA RESERVES THE RIGHT TO REFUSE TO INSTALL ANY OR ALL EQUIPMENT WHEN THE ROOM PREPARATION DOES NOT MEET SPECIFICATIONS. THE CURRENT STANDARD DETAILS MAY BE OBTAINED ON LINE AT www.hitachimed.com. CONTACT THE HMSA SITE PLANNING DEPARTMENT FOR THE CURRENT ACCESS CODES.

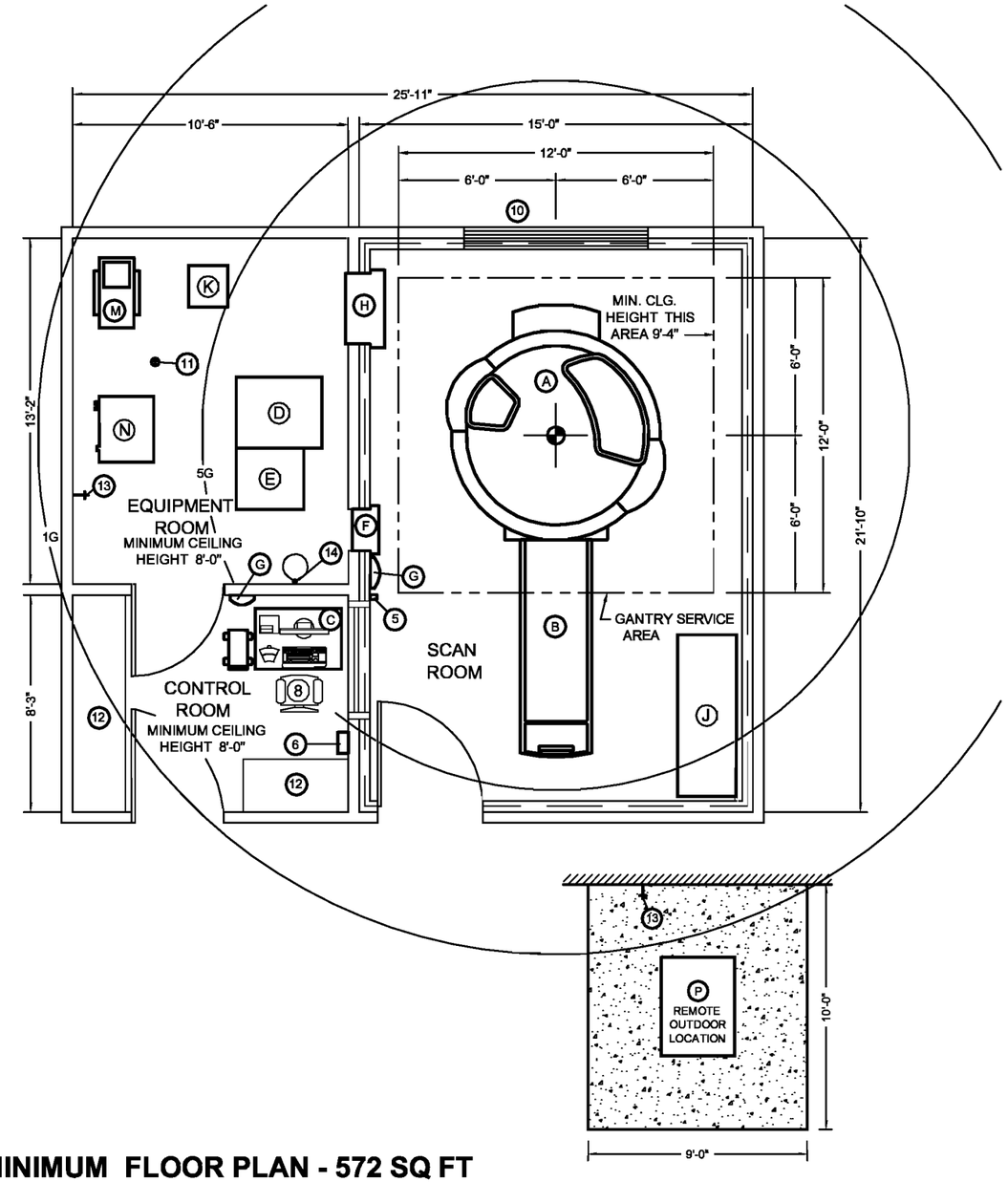

MINIMUM FLOOR PLAN - 572 SQ FT

"NOT TO SCALE"

HITACHI MEDICAL SYSTEMS AMERICA 1959 SUMMIT COMMERCE PARK TWINSBURG, OH 44087-2371 (800) 800-3106 WWW.HITACHIMED.COM	
MINIMUM SUITE LAYOUT	
DATE: 04/30/2012	REVISION: 05/18/2012
OASIS MARK II STANDARD DETAILS	PAGE 05 OF 27

OASIS MARK II EQUIPEMENT LEGEND

	COMPONENT	WIDTH	DEPTH	HEIGHT	WEIGHT (lbs)
A	GANTRY	8'-4"	9'-0"	7'-11"	31,600
B	PATIENT TABLE	2'-9"	8'-3"	1'-8" - 3'-0"	1,619*
C	OPERATORS CONSOLE **	4'-0"	2'-6"	2'-6"	75
	CPU	1'-1"	1'-6"	1'-7"	44
	SWITCH UNIT	9"	8"	2"	7
	MONITOR	1'-11"	9"	1'-7"	33
	KEYBOARD	1'-8"	10"	2"	5
	MULTIPLE TAP UNIT	9"	8"	3"	7
D	RFIP CABINET	2'-8"	4'-0"	6'-2"	1,654
E	GCPA CABINET	2'-4"	2'-8"	6-2"	1,158
F	MCU FILTER PANEL	1'-11"	1'-1"	2'-1"	67
G	ERDU	6"	3"	6"	5
H	RFIP FILTER PANEL	3'-0"	1'-6"	5'-1"	440
J	COIL CABINET	7'-0"	2'-3"	4'-3"	100
K	HELIUM COMPRESSOR	1'-6"	1'-11"	1'-9"	265
M	SENSE UNIT	2'-8"	1'-4"	3'-6"	111
N	HEAT EXCHANGER	2'-6"	2'-1"	2'-10"	420
P	R1200 OUTDOOR CHILLER [a]	3'-0"	4'-1"	6'-5"	2,000
	COMPONENTS LISTED BELOW BY CUSTOMER-EQUIPMENT WILL VARY				
5	OXYGEN PROBE [b]	3"	2"	6"	1
6	OXYGEN MONITOR [b]	8"	7"	11"	30
7	LASER IMAGER [c]	2'-2"	2'-9"	5'-10"	550

a WEIGHT WHEN FILLED. SHIPPING WEIGHT - 1,750 LBS.
b EXAMPLE-TELEDYNE MODEL 3350 WITH BATTERY BACK-UP
c EXAMPLE-KODAK DRY VIEW MODEL # 8700/8500
* INCLUDES MAXIMUM PATIENT WEIGHT - CAPACITY 660 LBS. (WHEN OPERATED MANUALLY)
** SEE NOTE 13

GENERAL SUITE CRITERIA

1) CARE MUST BE TAKEN TO ENSURE THE OPERATOR'S WORKSTATION, RFIP CABINET, GRADIENT AMPLIFIER, AND HELIUM REFRIGERATOR ARE LOCATED MORE THAN 9'-0" FROM THE MAGNET ISOCENTER.
2) SOME COMPONENTS ARE FIXED IN PLACE. CARE MUST BE TAKEN TO ENSURE SUFFICIENT SERVICE AREA IS PROVIDED.
3) CLEAR ACCESS TO THE FILTER PANELS AND POWER PANELS MUST BE MAINTAINED IN ACCORDANCE WITH NATIONAL ELECTRICAL CODE (NEC) AND LOCAL CODES.
4) POWER CONDITIONERS/UPS UNITS, AIR CONDITIONERS AND CHILLERS ARE POTENTIAL SOURCES OF INTERFERENCE. THESE SHOULD BE REMOTELY LOCATED AND MOUNTED ON VIBRATION DAMPENING PADS AS REQUIRED.
5) FDA REGULATIONS REQUIRE RESTRICTED/LIMITED ACCESS TO AREAS WHERE THE MAGNETIC FIELD IS 5 GAUSS OR GREATER. IT IS THE RESPONSIBILITY OF THE CUSTOMER AND THEIR DESIGN PROFESSIONALS TO ENSURE THAT THE FACILITY IS IN COMPLIANCE WITH THIS REGULATION. HMSA WILL PROVIDE A SITE SPECIFIC MAGNETIC SHIELD DESIGN TO REDUCE THE SIZE OF THE MAGNETIC FIELDS TO THE EXTENT POSSIBLE BASED ON THE FINAL LAYOUT.
6) CUSTOMER PROVIDED COMPONENTS (i.e. LASER IMAGER) SHOWN IN THE TYPICAL LAYOUT CAN GREATLY AFFECT THE ACCEPTABILITY OF YOUR PLANS AND THE SYSTEM OPERATION. COMPONENT SELECTIONS AND THEIR PLACEMENT MUST BE VERIFIED WITH SITE PLANNING PRIOR TO FINALIZATION OF THE DESIGN.
7) CONSTRUCTION MATERIALS (CEILING GRID, LIGHTS, STUDS, ETC.) SHOULD BE CHOSEN TO MINIMIZE THE FERROUS MATERIALS IN THE SCAN ROOM.
8) THE MINIMUM FINISH CEILING HEIGHT FOR THE SCAN ROOM IS 9'-4" (10'-0" RECOMMENDED) IN A 12'-0" x 12'-0" AREA CENTERED ABOVE ISO-CENTER. THE MINIMUM CEILING HEIGHT IN THE REMAINDER OF THE SCAN ROOM AND ALL OTHER ROOMS IS 8'-0".
9) HMSA WILL PROVIDE A COIL STORAGE CABINET FOR THE CONVENIENCE OF THE CUSTOMER. THE CUSTOMER MAY CHOOSE TO HAVE CUSTOM STORAGE AND CASEWORK DESIGNED.
10) AN INTERCOM BETWEEN THE OPERATOR AND PATIENT IS PROVIDED INTERNALLY AS PART OF THE OASIS MARK II SYSTEM. A FACILITY INTERCOM, IF DESIRED, SHOULD BE LINKED ONLY TO THE CONTROL ROOM.
11) DUE THE THE RISK OF STATIC SHOCK AND ISSUES REGARDING DUST, CLEANLINESS, AND SERVICEABILITY, CARPET SHOULD NOT BE USED IN THE MRI SUITE.
12) COMPUTER FLOORING MAY BE USED AS AN ALTERNATIVE TO WIREWAYS IN THE EQUIPMENT ROOM. THIS PROVIDES ADDITIONAL FLEXIBILITY IN EQUIPMENT PLACEMENT. IF COMPUTER FLOORING IS USED, A MINIMUM OF 8" CLEAR MUST BE AVAILABLE UNDER THE FLOOR. THE UNDER FLOOR SPACE MAY ALSO BE USED AS A SUPPLY PLENUM FOR THE HVAC SYSTEM.
13) A TABLE FOR THE OPERATOR'S WORKSTATION IS TYPICALLY PROVIDED WITH THE SYSTEM. CUSTOM CASEWORK WITH A BUILT-IN DESK FOR THE MONITOR, KEYBOARD AND CPU BELOW IS RECOMMENDED TO IMPROVE WORK AREA FUNCTIONALITY, ADD STORAGE SPACE AND ENHANCE SUITE AESTHETICS.
14) A MINIMUM 3'-6"W X 7'-0"H FLAT ACCESS PATH MUST BE DESIGNED INTO THE SUITE FOR DELIVERY OF THE CRYOGEN DEWARS AND GRADIENT LOADER. THIS PATH WILL BE USED THROUGHOUT THE LIFE OF THE SYSTEM AS PART OF ITS ROUTINE MAINTENANCE (SEE NOTES "PLANNING" B-4 ON PG 3 AND 4 ON PG 5 REGARDING DOORWAYS)

HITACHI MEDICAL SYSTEMS AMERICA
1959 SUMMIT COMMERCE PARK TWINSBURG, OH 44087-2371
(800) 800-3106 WWW.HITACHIMED.COM

FLOOR LOADING STRUCTURAL

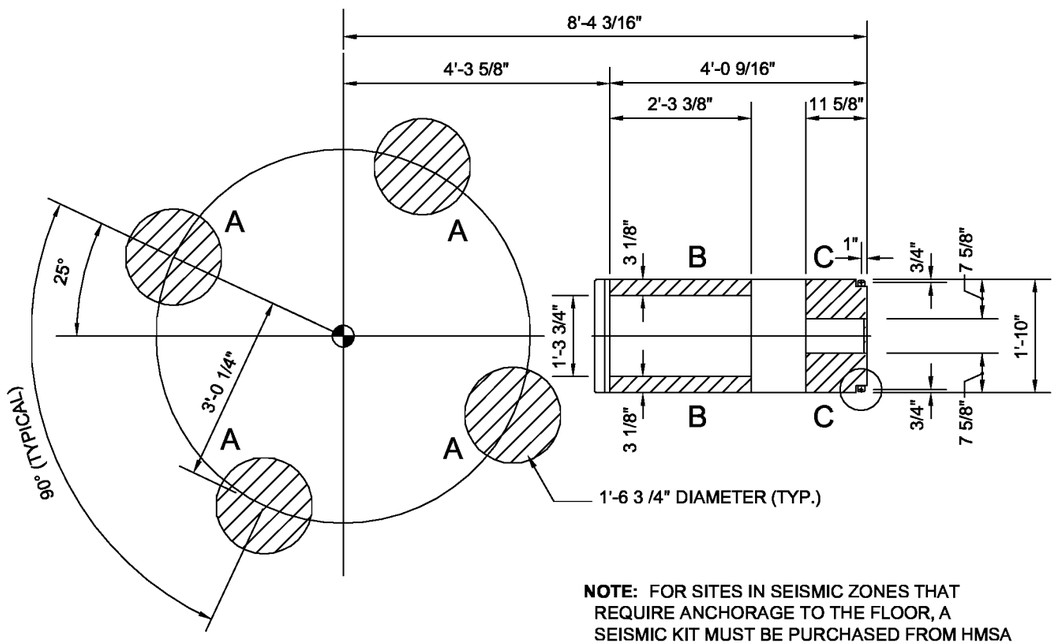

NOTE: FOR SITES IN SEISMIC ZONES THAT REQUIRE ANCHORAGE TO THE FLOOR, A SEISMIC KIT MUST BE PURCHASED FROM HMSA

GANTRY / PATIENT TABLE FEET

NOT TO SCALE

WEIGHT DISTRIBUTION			
COMPONENT	FEET	WEIGHT (lbs)	TOTAL
MAGNET	A	7,900	31,600
PATIENT TABLE	B	663*	1,619*
	C	956*	

*INCLUDES MAXIMUM WEIGHT PATIENT (660 LBS)

THIS CHART AND DRAWING SHOULD BE USED IN CONJUNCTION WITH THE FINAL APPROVED FLOOR PLAN FOR PROPER PLANNING AND DESIGN

STRUCTURAL NOTES

ALL STRUCTURAL SUPPORT IS THE CUSTOMER'S RESPONSIBILITY. A QUALIFIED PROFESSIONAL MUST REVIEW BOTH THE SCAN ROOM SLAB AND THE DELIVERY ROUTE TO ENSURE THE FOLLOWING HMSA SPECIFICATIONS ARE MET:

1) THE SCAN ROOM SHOULD BE SLAB ON-GRADE WHENEVER POSSIBLE. WHEN THE FLOOR IS NOT SLAB ON GRADE, THE STRUCTURAL SUPPORT MUST BE DESIGNED TO LIMIT VIBRATION AS NOTED BELOW.
2) THE FLOOR SLAB MUST BE DESIGNED TO BEAR THE WEIGHT OF THE GANTRY DISTRIBUTED THROUGH THE FOUR (4) FEET AS SHOWN.
3) THE MAXIMUM AMOUNT OF FERROUS REINFORCEMENT MATERIALS ALLOWED WITHIN FIVE FEET OF ISO-CENTER IS FIVE POUNDS PER SQUARE FOOT (5LB / SF), LOCATED AT A MINIMUM OF THREE AND ONE HALF INCHES (3 1/2") BELOW THE TOP OF THE SCAN ROOM FLOOR SLAB. REINFORCEMENT OR OTHER STEEL STRUCTURE IN EXCESS OF THIS AMOUNT MUST BE SUBMITTED TO HMSA FOR REVIEW.
4) AN ISOLATED FLOOR SLAB FOR THE SCAN ROOM IS RECOMMENDED BY HMSA. DUE TO UNFORESEEN FUTURE CONDITIONS, THE SCAN ROOM SLAB SHOULD BE ISOLATED VERTICALLY FROM THE MAIN BUILDING SLAB. VIBRATION ABSORBENT MATERIAL SHOULD BE PLACED ALONG THE JOINT BETWEEN THE SLABS.
5) THE SLAB MUST BE DESIGNED TO ENSURE THAT VIBRATION CRITERIA IS MET NOW AND IN THE FORESEEABLE FUTURE.
   a. ALL VIBRATION INDUCING COMPONENTS IN THE AREA OF THE MAGNET SHOULD BE MOUNTED WITH VIBRATION ISOLATORS OR OTHER MEANS OF VIBRATION ISOLATION/DAMPENING.
6) HMSA WILL PERFORM TESTING AT THE SELECTED SITE TO IDENTIFY THE EXISTING CONDITIONS. IF THE SITE FAILS TO MEET THE HMSA SPECIFICATIONS, THE FOLLOWING IS REQUIRED:
   a. ESCALATE TESTING TO A VIBRATION/STRUCTURAL ENGINEER FOR MITIGATION.
   b. SELECT AN ALTERNATE SITE.
7) THE SCAN ROOM FLOOR MUST BE FLAT AND LEVEL TO 1/8" +/- OVER 10' IN THE ENTIRE AREA OF THE MAGNET AND PATIENT TABLE.
8) REFER TO OASIS EQUIPMENT LEGEND (PG 6 OF 27) FOR ANCILLARY EQUIPMENT WEIGHTS.
9) FOR ROOF TOP INSTALLATION OF CHILLER, MOUNTING CURB IS TO BE DESIGNED, SUPPLIED AND INSTALLED BY CUSTOMER'S ENGINEERS AND CONTRACTOR. IF DESIRED, A COPY OF THE HASKRIS R1200 ROOF CURB ILLUSTRATION MAY BE REQUESTED FROM THE HMSA SITE PLANNING DEPARTMENT.

NOTE: HMSA WILL PERFORM AN INITIAL VIBRATION TEST FOR THE CONVENIENCE OF THE CUSTOMER AT THE SAME TIME THAT THE MAGNETIC FLUCTUATION TEST IS PERFORMED, THIS WILL HELP TO IDENTIFY SITES WHERE A CONCERN ABOUT VIBRATION EXISTS. IF THERE IS A CONCERN, THE CUSTOMER WILL NEED TO HAVE A QUALIFIED CONSULTING/ENGINEERING FIRM THAT SPECIALIZES IN VIBRATION CONTROL PERFORM A SEPARATE TEST AND PROVIDE A REPORT WITH RECOMMENDATIONS FOR REMEDIATION THROUGH THE SLAB/ FOUNDATION/STRUCTURAL SUPPORT DESIGN.

THE TEST THAT HMSA (AND THE INDEPENDENT CONSULTING/TEST FIRM IF REQUIRED) PERFORMS CAN ONLY MEASURE EXISTING CONDITIONS. AS MODIFICATIONS ARE MADE TO THE BUILDING IN THE FUTURE (ADDITION OR EXCHANGE OF HVAC EQUIPMENT, CHILLERS, ETC.), THE CHANGES MUST BE REVIEWED TO ENSURE THAT ANY COMPONENT THAT MAY INDUCE VIBRATION IS PROPERLY MOUNTED ON SHOCK ABSORBING MOUNTS TO PREVENT POTENTIAL INTERFERENCE.

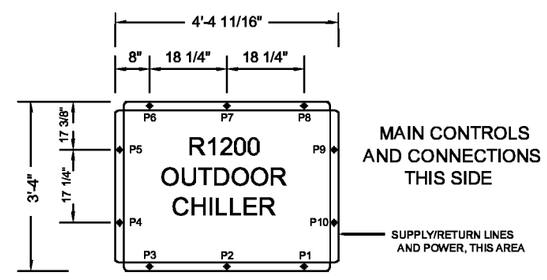

OUTDOOR CHILLER BASE

NOT TO SCALE

CHILLER BOLT POINT LOAD	
BOLT	LOAD IN LBS.
P1	189
P2	210
P3	195
P4	198
P5	202
P6	204
P7	222
P8	198
P9	193
P10	189

HITACHI MEDICAL SYSTEMS AMERICA
1959 SUMMIT COMMERCE PARK TWINSBURG, OH 44087-2371
(800) 800-3106 WWW.HITACHIMED.COM

FLOOR LOADING STRUCTURAL

DATE: 04/30/2012 | REVISION: 05/18/2012

RF AND MAGNETIC SHIELDING

RF SHIELDING

A RADIO FREQUENCY (RF) SHIELD IS REQUIRED FOR THE OPERATION OF THE OASIS MARK II SYSTEM AND IS NOT PROVIDED BY HMSA. THIS SIX (6) SIDED SHIELD IS REQUIRED FOR ALL MRI SYSTEMS. COORDINATION WITH THE SHIELDING VENDOR IS OF THE UTMOST IMPORTANCE. CONTACT SITE PLANNING FOR A LIST OF RF VENDORS. THE FOLLOWING IS A LISTING OF SOME OF THE DESIGN REQUIREMENTS AND CRITERIA WHICH MUST BE CONSIDERED.

1) THE RF SHIELDED ROOM MUST HAVE AN INSULATION RESISTANCE OF MORE THAN 1000 OHMS (AS MEASURED WITH A 500 V-DC MEGGER), WITH RESPECT TO THE BUILDING GROUNDING FACILITY AND OTHER EQUIPMENT INSTALLED IN THE BUILDING.

2) THE RF SHIELD MUST PROVIDE 80 dB ATTENUATION OR BETTER FROM 1.0-80 MHz.

3) IF A SPRINKLER SYSTEM IS REQUIRED, THE DESIGN AND CONSTRUCTION MUST BE COORDINATED WITH THE RF VENDOR TO ENSURE ITS ISOLATION FROM THE SHIELDING. HMSA RECOMMENDS THAT ANY PORTION OF THE SPRINKLER SYSTEM THAT PENETRATES THE RF SHIELD BE DRY. FINAL DESIGN APPROVAL AND ACCEPTANCE IS THE RESPONSIBILITY OF THE RF VENDOR.

4) SINKS AND OTHER PLUMBING FIXTURES SHOULD BE AVOIDED IN THE SCAN ROOM UNLESS REQUIRED BY CODE. IF A SINK IS REQUIRED, THE PLUMBING MATERIALS, ROUTING AND INSTALLATION MUST BE COORDINATED BETWEEN THE PLUMBING CONTRACTOR AND RF SHIELDING VENDOR TO ENSURE THAT THE INTEGRITY OF THE RF SHIELD IS MAINTAINED.

5) THE RF VENDOR WILL BE RESPONSIBLE FOR PROVIDING THE FOLLOWING:
   a. INSTALLATION OF THE HMSA RFIP AND MCU FILTER PANELS (REFER TO PG. 17 OF 27; WIREWAYS FOR MOUNTING HEIGHTS)
   b. SUPPLY AND INSTALL AN RF DOOR (4'-0"w X 7'-0"h MIN.)
   c. SUPPLY AND INSTALL AN RF WINDOW (4'-0"w X 3'-0"h TYP.)
   d. SUPPLY AND INSTALL WAVEGUIDES FOR HVAC SUPPLY AND RETURN DUCTS
   e. SUPPLY AND INSTALL WAVEGUIDES FOR HMSA WATER AND HELIUM LINES (SIX (6) @1-3/ 4)". FOUR (4) LOCATED AT FLOOR LEVEL FOR WATER LINES AND TWO (2) LOCATED ABOVE MCU PANEL FOR HELIUM LINES WHERE INDICATED ON CUSTOMER SITE SPECIFIC DRAWING.
   f. SUPPLY AND INSTALL WAVEGUIDE FOR THE EMERGENCY EXHAUST VENT
   g. SUPPLY AND INSTALL WAVEGUIDE TO SERVE AS A PRESSURE RELIEF
   h. SUPPLY AND INSTALL HIGH PERFORMANCE EMI ELECTRICAL FILTERS FOR ELECTRICAL OUTLETS AND LIGHTING
   i. SUPPLY AND INSTALL A CRYOGEN VENT PIPE (WAVEGUIDE) WITH NON-CONDUCTIVE HARDWARE (I.E. NUTS, BOLTS, WASHERS). THE COMPONENTS MUST BE NON-FERROUS STAINLESS STEEL AND MAINTAIN THE RF ROOM INTEGRITY.
   j. SUPPLY, INSTALL AND TEST HIGH PERFORMANCE ELECTRICAL FILTERS AND WAVEGUIDES FOR NON-HMSA EQUIPMENT
   k. INITIAL AND FINAL RF SHIELD VERIFICATION TESTS
   l. DETAILED RF SHIELD INSTALLATION DRAWINGS FOR APPROVAL BY ARCHITECT OR CONTRACTOR
   m. ENSURE FILTER FOR OXYGEN MONITOR REMOTE PROBE (SUPPLIED BY CUSTOMER) IS INSTALLED PER MONITOR MANUFACTURER SPECIFICATIONS
   n. A 8'-6"w X 8'-6"h ACCESS PANEL IN THE SHIELD FOR DELIVERY OF THE SYSTEM
   o. REINSTALLATION OF THE ACCESS PANEL AND PERFORMING A FINAL TEST OF COMPLETED ROOM THE DAY OF DELIVERY
   p. MAGNETIC SHIELDING AS DIRECTED BY CUSTOMER AND TO SPECIFICATIONS PROVIDED BY HMSA
   q. VERIFICATION THAT THE FINISH SUB-FLOOR OF THE RF SHIELD (SCAN ROOM) MEETS HMSA'S SPECIFICATION FOR LEVELNESS AND FLATNESS IN THE AREA OF THE GANTRY AND PATIENT TABLE

6) THE RF SHIELDING VENDOR MUST BE CONTACTED FOR ADDITIONAL WALL PENETRATIONS, WAVE GUIDES AND/OR EMI FILTERS AS REQUIRED IF A SOUND SYSTEM IS DESIRED (SOUND SYSTEM IS AVAILABLE FROM HMSA AS AN OPTION)

7) WHEN POSSIBLE, THE CONCRETE SLAB SHOULD BE RECESSED TO ACCOMMODATE THE RF SHIELD'S FLOOR THICKNESS. THIS AMOUNT WILL VARY BY VENDOR. IF THE SLAB CANNOT BE RECESSED, A SMALL RAMP THAT EXTENDS OUT FROM THE DOOR THRESHOLD IS TYPICALLY SUPPLIED BY THE RF VENDOR.

8) METHODS OF RF ROOM CONSTRUCTION VARY. THE VENDOR SHOULD BE SELECTED PRIOR TO THE FINAL PLANNING OF THE ROOM. CONTACT HMSA SITE PLANNING FOR A LIST OF VENDORS EXPERIENCED WITH HITACHI MRI SYSTEMS.

9) IF OXYGEN OR OTHER MEDICAL GAS LINES ARE DESIRED IN THE SCAN ROOM, THE PENETRATIONS MUST BE INTEGRATED INTO THE RF SHIELD AND OCCUR WITHIN FOUR (4) FEET OF THE RFIP FILTER PANEL. CONSULT WITH THE RF SHIELD VENDOR.

10) ADDITIONAL AND OPTIONAL CONCERNS SUCH AS (OUTSIDE WINDOWS, EXTRA DOORS, ETC. SHOULD BE DISCUSSED WITH THE RF VENDOR AND REVIEWED BY HMSA PRIOR TO FINALIZATION OF THE PLANS.

11) IF NECESSARY, IT IS THE CUSTOMERS RESPONSIBILITY TO COORDINATE SUITE CONSTRUCTION, THE RF VENDOR AND DELIVERY TIMING TO ACCOMMODATE AN INDIRECT DELIVERY PATH.

MAGNETIC SHIELDING

MAGNETIC SHIELDING IF NECESSARY, IS TYPICALLY PROVIDED BY THE RF VENDOR AND IS INCORPORATED INTO THE RF SHIELD AS IT IS CONSTRUCTED.

1) HMSA WILL PROVIDE A DESIGN FOR THE MAGNETIC SHIELDING TO MEET SITE SPECIFIC NEEDS AND FORWARD THE SPECIFICATIONS TO THE CUSTOMER AND RF VENDOR.

2) IF MAGNETIC SHIELDING IS USED, CONSULT WITH THE RF VENDOR TO DETERMINE THE WEIGHT AND ANY ADDITIONAL STRUCTURAL SUPPORT REQUIREMENTS.

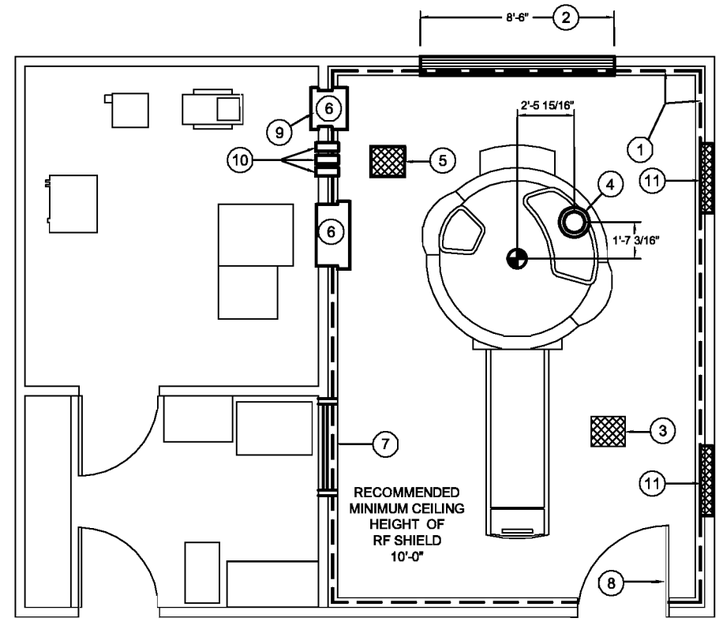

1. RF SHIELD-FOUR (4) WALLS, CEILING AND FLOOR REQUIRED TO PROVIDE 80dB ATTENUATION FROM 1-80MHz. TYPICAL 5" WALL THICKNESS SHOWN, WILL VARY WITH VENDOR.
2. ACCESS PANEL: 8'-6"w X 8'-6"h MINIMUM CLEAR OPENING RECOMMENDED. LOCATION MAY VARY.
3. WAVE GUIDE FOR EMERGENCY EXHAUST VENT FAN. SIZED BY ARCHITECT, PROVIDED BY RF VENDOR. LOCATION MAY VARY.
4. CRYOGEN VENT (WAVEGUIDE). CONNECTED TO GANTRY AS PART OF THE DELIVERY PROCESS.
5. WAVEGUIDE TO SERVE AS PRESSURE RELIEF. SIZE AND LOCATION MAY VARY. SIZED BY ARCHITECT
6. FILTER PANEL FOR SYSTEM INTERCONNECTION. PROVIDED BY HMSA AND INSTALLED BY RF VENDOR PRIOR TO FINAL ROOM TEST.
7. RF WINDOW: 4'-0"W X 3'-0"H (TYP.), MOUNTED AT 36" AFF
8. RF DOOR: 4'-0"W X 7'-0"H (REQ.)
9. SIX (6) 1 3/4" WAVE GUIDES PROVIDED AND INSTALLED BY RF VENDOR FOUR (4) LOCATED IN LOWEST SECTION OF WIREWAY, TWO (2) LOCATED ABOVE MCU PANEL. MOUNTED FLUSH WITH SCAN ROOM WALL
10. HIGH PERFORMANCE EMI ELECTRICAL FILTERS BY RF VENDOR QUANTITY AND LOCATION MAY VARY
11. WAVEGUIDE FOR HVAC SUPPLY AND RETURN DUCTS. SIZE AND LOCATION MAY VARY.

NOTE: VERIFY ALL ROUGH-IN OPENINGS WITH RF VENDOR.

HITACHI MEDICAL SYSTEMS AMERICA
1959 SUMMIT COMMERCE PARK TWINSBURG, OH 44087-2371
(800) 800-3106 WWW.HITACHIMED.COM

RF AND MAGNETIC SHIELDING

DATE: 04/30/2012 | REVISION: 05/18/2012

ENVIRONMENTAL

HVAC NOTES

1) THE MRI SCAN ROOM TEMPERATURE MUST BE MAINTAINED BETWEEN 68-75 DEGREES F. WITH A MAXIMUM ALLOWABLE FLUCTUATION OF (+/-) 2-1/2 DEGREES PER HOUR.

2) ALL ROOMS MUST BE MAINTAINED AT THE RELATIVE HUMIDITY (NON-CONDENSING) LISTED BELOW.

3) CHANGES TO THE SCAN ROOM TEMPERATURE WILL AFFECT THE SYSTEM IMAGING. THEREFORE, THE ENVIRONMENT MUST BE MAINTAINED AT ALL TIMES (24HRS/DAY; 7DAYS/WEEK).

4) THERMOSTATS MAY NOT BE USED IN THE SCAN ROOM. A REMOTE SENSOR IN THE RETURN AIR DUCT OUTSIDE OF THE RF SHIELD MUST BE UTILIZED FOR CONTROLLING THE SCAN ROOM ENVIRONMENT. THE REMOTE SENSOR MUST BE LOCATED WITHIN FIVE FEET (5') OF THE OUTSIDE OF THE WAVEGUIDE. THE THERMOSTAT SHOULD BE LOCATED IN THE CONTROL AREA.

5) IT IS THE RESPONSIBILITY OF THE HVAC DESIGNER TO ENSURE THERE IS ADEQUATE AIRFLOW ACROSS THE REMOTE SCAN ROOM SENSOR TO MAINTAIN PROPER ENVIRONMENTAL CONDITIONS. THIS TYPICALLY REQUIRES CONTINUOUS AIR CIRCULATION ACROSS THE REMOTE SCAN ROOM SENSOR TO MAINTAIN PROPER ENVIRONMENTAL CONDITIONS 24/7.

6) AC UNITS, CONDENSERS, AND AIR HANDLERS MUST BE LOCATED OUTSIDE OF 20 FEET FROM MAGNET ISO-CENTER AS SHOWN ON THE SITE SPECIFIC DRAWING AND SHOULD BE MOUNTED ON VIBRATION ISOLATORS.

7) A FLEXIBLE, NON-CONDUCTIVE BOOT PROVIDED BY THE HVAC CONTRACTOR MUST BE USED TO CONNECT DUCTWORK TO THE EXTERIOR SIDE OF HVAC WAVEGUIDES TO PREVENT GROUNDING OF THE RF SHIELD BY THE EXTERNAL DUCTWORK.

8) DUCTWORK AND DIFFUSER GRILLS WITHIN THE SCAN ROOM MUST BE NON-FERROMAGNETIC.

9) CARE SHOULD BE TAKEN TO ENSURE THE SUPPLY AIR IS DIRECTED AWAY FROM THE GANTRY AND PATIENT TABLE. DIFFUSER PLACEMENT SHOULD BE DESIGNED TO ENSURE EVEN AIR DISTRIBUTION.

10) IF A FLOOR MOUNTED COMPUTER ROOM HVAC SYSTEM IS USED, PLEASE NOTIFY HMSA SITE PLANNING TO ENSURE ADEQUATE SERVICE SPACE IS AVAILABLE FOR THIS UNIT AS WELL AS THE OASIS MARK II COMPONENTS IN THE EQUIPMENT ROOM.

11) COMPUTER FLOORING IN THE EQUIPMENT ROOM MAY BE USED FOR A SUPPLY PLENUM.

12) IT IS THE CUSTOMER'S RESPONSIBILITY TO ENSURE THAT A PROPER ENVIRONMENT IS CONTINUOUSLY MAINTAINED FOR THE OASIS MARK II SYSTEM. THE CHART BELOW MUST BE USED BY THE ARCHITECT/ENGINEER DESIGNING THE HVAC SYSTEM. CUSTOMER SUPPLIED AND OPTIONAL COMPONENTS MUST BE IDENTIFIED. THE HVAC DESIGNER IS RESPONSIBLE FOR VERIFYING THE LOADS BASED ON ACTUAL UNITS TO BE USED. OTHER LOADS (i.e.: PEOPLE, LIGHTS, OUTSIDE CONDITIONS, ETC...) MUST ALSO BE CONSIDERED IN THE DESIGN. ALTHOUGH THE DESIGN OF THE HVAC SYSTEM IS THE RESPONSIBILITY OF THE CUSTOMER, HMSA STRONGLY SUGGESTS THE USE OF A ZONED SYSTEM DUE TO THE LARGE VARIANCE OF HEAT LOADS FROM ROOM TO ROOM.

LOCATION	COMPONENT		HEAT LOAD	TEMP. (F)	HUMIDITY	dB LEVEL (MAX)
SCAN ROOM	Ⓐ OASIS MARK II GANTRY		8,750 BTUH	68-75° MAXIMUM CHANGE 2.5° PER HOUR	45-60%	112
	Ⓑ PATIENT TABLE					
CONTROL ROOM	Ⓒ OPERATOR'S WORKSTATION		3,405 BTUH	68-82°	20-60%	55
	Ⓖ LASER IMAGER		BY CUSTOMER			
EQUIPMENT ROOM	Ⓓ RFIP	21,707 BTUH	39,816 BTUH	65-78°	20-60% (IF TEMP IS ABOVE 77° 20-53%)	86
	Ⓔ GCPA	6,495 BTUH				
	Ⓕ MCU	1,389 BTUH				
	Ⓗ RFIP FILTER PANEL	1,468 BTUH				
	Ⓚ HELIUM COMPRESSOR	5,556 BTUH				
	Ⓜ SENSE UNIT	218 BTUH				
	Ⓝ HEAT EXCHANGER	2983 BTUH				

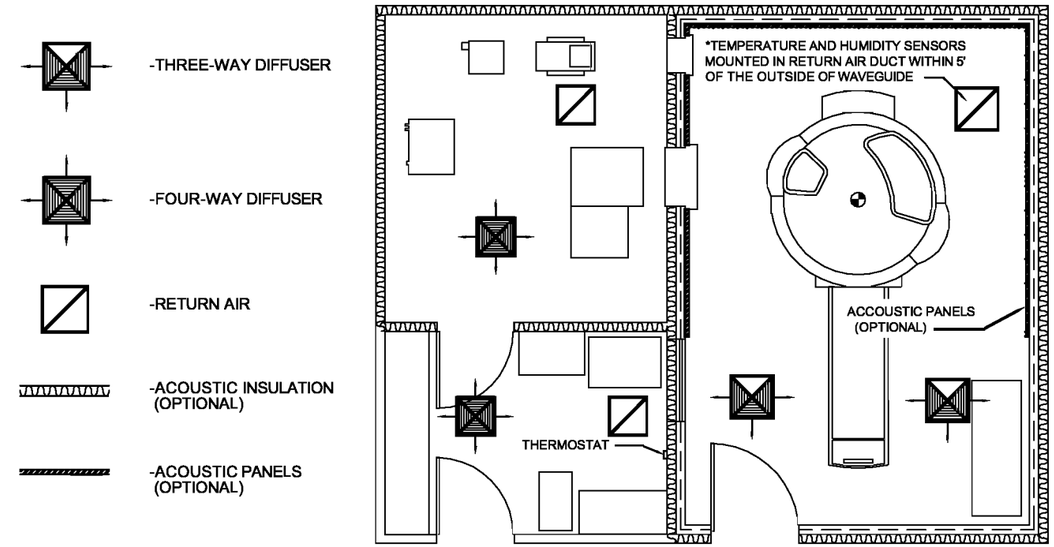

ACOUSTICAL NOTES

1) SIMILAR TO OTHER MR IMAGING SYSTEMS, THE OASIS MARK II PRODUCES NOISE LEVELS (WHILE SCANNING) THAT ARE GENERALLY CONSIDERED UNACCEPTABLE FOR A NORMAL OFFICE ENVIRONMENT. DAILY PERMISSIBLE NOISE EXPOSURE LEVELS SHOULD BE CONSIDERED WHEN PLANNING A FACILITY. THE ADJACENT CHART PROVIDES THE MAXIMUM NOISE LEVELS CREATED DURING THE SCAN PROCESS.

2) ACOUSTICAL DAMPENING FOR BOTH THE SCAN AND EQUIPMENT ROOM IS HIGHLY RECOMMENDED FOR THE COMFORT OF OCCUPANTS OF SURROUNDING AREAS INCLUDING THE TECHNICIAN. SOUND INSULATION IN THE WALLS AND THE ADDITION OF ACOUSTICAL DAMPENING PANELS TO THE SCAN ROOM WALLS ARE TWO MEANS OF LIMITING NOISE TRANSMISSION. SCAN ROOM SOUND PANELS SHOULD BE CONSTRUCTED OF NON-FERROUS MATERIALS (WOOD FRAMES, VELCRO HANGING SYSTEMS). THE ARCHITECT MAY WISH TO CONSULT AN ACOUSTICAL ENGINEER FOR ADDITIONAL METHODS OF SOUND DAMPENING.

3) IF SURFACE MOUNTED ACOUSTIC PANELS ARE SPECIFIED IN THE SCAN ROOM, HMSA RECOMMENDS THAT FINAL FIELD MEASUREMENTS BE DELAYED UNTIL AFTER THE FILTER PANELS HAVE BEEN INSTALLED TO ENSURE PROPER FITMENT. THE EXTENT OF WALL COVERAGE MAY VARY FROM THAT SHOWN ABOVE DEPENDENT ON ROOM LAYOUT, PANEL CONSTRUCTION AND AMOUNT OF ACOUSTIC DAMPENING DESIRED.

4) SOME RF SHIELDING VENDORS OFFER OPTIONS THAT INTEGRATE SOUND REDUCTION MATERIALS INTO THE RF SHIELD ITSELF. CONTACT THE RF SHIELDING VENDOR FOR FURTHER INFORMATION.

CHILLER REQUIREMENTS

THE OASIS MARK II MRI SYSTEM REQUIRES CHILLED WATER FOR COOLING OF THE CRYOGEN COMPRESSOR, GRADIENT AMPLIFIER AND COILS. WITH EACH OASIS MARK II SYSTEM HMSA WILL PROVIDE A HEAT EXCHANGE UNIT LOCATED IN THE OASIS MARK II EQUIPMENT ROOM. TWO OPTIONS ARE AVAILABLE TO PROVIDE COOLING WATER TO THE OASIS MARK II HEAT EXCHANGER AND MRI SYSTEM.

OPTION 1: SELF CONTAINED OUTDOOR CHILLER (HASKRIS R1200) PROVIDED BY HMSA, DETAILS OUTLINED BELOW
OPTION 2: CUSTOMER SUPPLIED CHILLED WATER SOURCE, I.E. BUILDING CHILLED WATER SYSTEM

CONTACT THE SITE PLANNING DEPARTMENT FOR ADDITIONAL DETAILS ON OPTION 2.

HMSA SUPPLIED OUTDOOR CHILLER (OPTION 1):

THE INSTALLATION AND CONNECTION OF THE HASKRIS R1200 CHILLER SUPPLIED BY HMSA IS A RESPONSIBILITY SHARED BETWEEN THE CUSTOMER, GENERAL CONTRACTOR AND HMSA.

CUSTOMER / GENERAL CONTRACTOR RESPONSIBILITIES:

1) IDENTIFY AN OUTDOOR LOCATION FOR THE R1200 CHILLER AND PAD THAT WILL ALLOW UNOBSTRUCTED AIRFLOW AROUND THE SIDES AND TOP OF THE UNIT.
2) RECEIVE AND UNLOAD CHILLER SYSTEM AT DESIRED LOCATION AND SET IT IN PLACE AT THE SITE
   a. CHILLER CAN BE DELIVERED TO MRI SITE OR CONTRACTOR FACILITY, IF DELIVERED TO LOCATION OTHER THAN MRI SITE, CONTRACTOR IS RESPONSIBLE FOR TRANSPORTING EQUIPMENT TO FINAL LOCATION
   b. CHILLER IS DELIVERED VIA A LIFT GATE TRUCK. CONTRACTOR IS RESPONSIBLE FOR PROVIDING NECESSARY EQUIPMENT (FORKLIFT, PALLET JACK, ETC...) AND MOVING UNITS INTO PLACE.
3) PROVIDE AND INSTALL ELECTRICAL POWER AS REQUIRED FOR THE R1200 CHILLER AND HEAT EXCHANGER.
4) PROVIDE AND INSTALL A HOSE BIBB AND FLOOR DRAIN IN THE EQUIPMENT ROOM. DRAIN MUST BE LOCATED SO THAT IT IS NOT DIRECTLY UNDER ANY SYSTEM COMPONENT.
5) PROVIDE ANY FACILITY CONSTRUCTION / UPGRADE REQUIRED FOR CHILLER INSTALLATION
6) PROVIDE SUB-CONTRACTOR(S) TO PERFORM INSTALLATION OF THE R1200 INCLUDING ALL PLUMBING, WIRING AND STARTUP ITEMS LISTED UNDER INSTALLING CONTRACTOR RESPONSIBILITIES ON PAGE 11 OF 27.
7) INSTALL, FILL, TEST AND HAVE CHILLER OPERATIONAL PRIOR TO THE DELIVERY OF THE OASIS MARK II SYSTEM.
8) PROVIDE AND INSTALL A TEMPERATURE GAUGE, PRESSURE GAUGE AND FLOW METER AS LIST UNDER CUSTOMER/INSTALLING CONTRACTOR RESPONSIBILITIES ON PG. 11 OF 27.
9) PROVIDE AND INSTALL A 12' LONG LOOP OF 1 1/2" OPAQUE FIBER REINFORCED HOSE BETWEEN SUPPLY AND RETURN OUTLETS IN EQUIPMENT ROOM TO ALLOW FOR START-UP AND NO LOAD TESTING OF R1200 CHILLER. HOSE WILL BE USED BY HMSA FOR CONNECTION OF HEAT EXCHANGER AT TIME OF INSTALLATION.

HMSA RESPONSIBILITIES

1) COORDINATE WITH THE CUSTOMER / CONTRACTOR TO ARRANGE DELIVERY DATE AND ADDRESS FOR THE R12000 CHILLER AT THE APPROPRIATE TIME DURING THE CONSTRUCTION PHASE OF THE PROJECT.
2) PROVIDE AND INSTALL ALL PLUMBING AND CONNECTIONS BETWEEN THE HEAT EXCHANGER AND THE OASIS MARK II MRI SYSTEM.
   - (a) HEAT EXCHANGER TO SENSE UNIT
   - (b) SENSE UNIT TO HELIUM COMPRESSOR
   - (c) GRADIENT POWER AMPLIFIER LOOP
   - (d) GRADIENT COIL LOOP
   - (e) HELIUM LINES

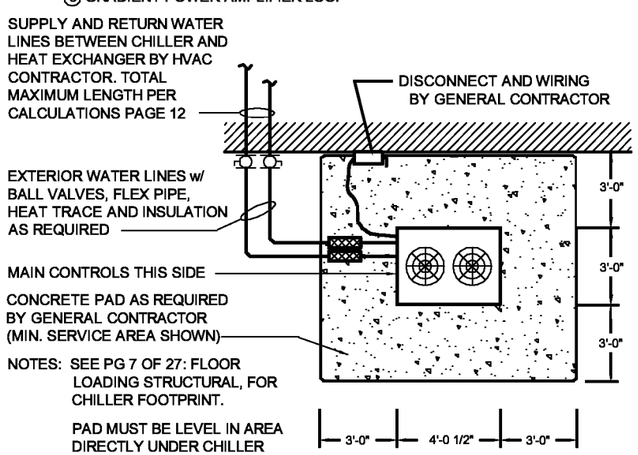

OUTDOOR CHILLER PLAN

NOT TO SCALE

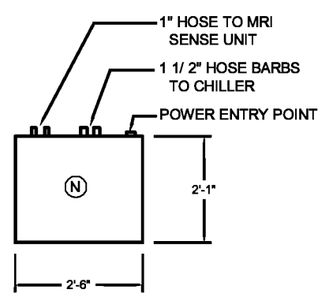

NOTE: MINIMUM CLEARANCES: FRONT - 36" RIGHT - 24", LEFT - 6", REAR - 12", ABOVE - 36"

ATTACHMENT FOR WATER LINES AND POWER IS AT REAR OF UNIT

HEAT EXCHANGER PLAN

NOT TO SCALE

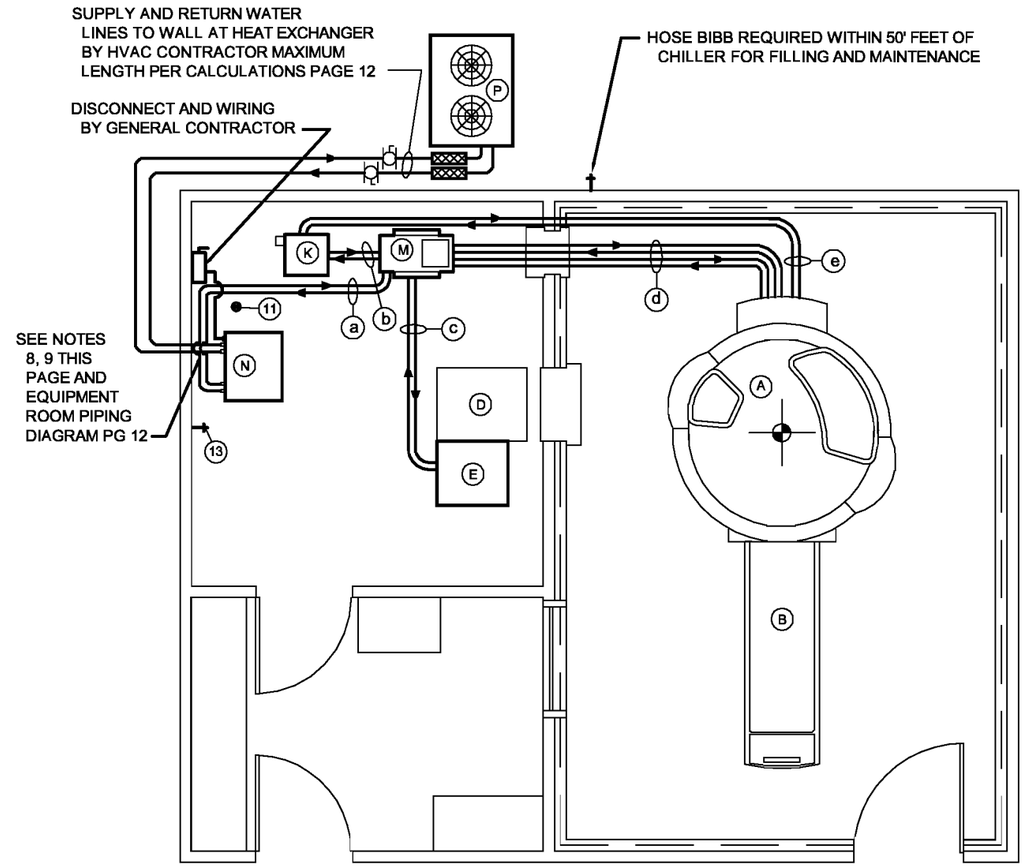

CHILLER CONNECTION SCHEMATIC

NOT TO SCALE

NOTE: RUNS SHOWN ARE SCHEMATIC ONLY AND DO NOT INDICATE ACTUAL CONNECTION POINTS

POWER REQUIREMENTS

R1200 OUTDOOR CHILLER:

480V (+5%, -10%), 3 PH, 60 Hz, 4 WIRE,
31.7 MCA*, 40 MOCP** w/ TIME DELAY BREAKER

HEAT EXCHANGER:

480V (+/- 10%), 3 PH, 60 Hz, 4 WIRE,
3 MCA*, 15 MOCP**

* MINIMUM CIRCUIT AMPACITY
** MAXIMUM OVER CURRENT PROTECTION

SPECIAL AMBIENT REQUIREMENTS:

HIGH AMBIENT:

AMBIENT AIR TEMPERATURE EXCEEDS 120° F

LOW AMBIENT:

AMBIENT AIR TEMPERATURE FALLS BELOW -20° F

HITACHI MEDICAL SYSTEMS AMERICA
1959 SUMMIT COMMERCE PARK TWINSBURG, OH 44087-2371
(800) 800-3106 WWW.HITACHIMED.COM

CHILLER REQUIRMENTS

DATE: 04/30/2012 | REVISION: 05/18/2012

CHILLER INSTALLATION CHECKLIST

CHILLER CHECKLIST REQUIREMENTS

THE START UP OF THE CHILLER MUST BE PERFORMED BY AN AUTHORIZED AGENT OF HASKRIS IN ORDER TO ENSURE IT IS DONE PROPERLY AND TO MAINTAIN THE FACTORY WARRANTY. HAVING THE CHILLER INSTALLED AND OPERATIONAL WHEN THE HITACHI OASIS MARK II ARRIVES ON SITE IS ESSENTIAL FOR A SUCCESSFUL DELIVERY BECAUSE IT IS SHIPPED WITH ITS CRYOSTAT PRE-COOLED (FILLED WITH CRYOGENS). THE FOLLOWING STEPS MUST BE PERFORMED IN ORDER TO ENSURE THAT THE CHILLER IS READY FOR CONNECTION TO THE OASIS MARK II.

CUSTOMER/ INSTALLING CONTRACTOR RESPONSIBILITIES

1) INSTALL ALL WATER PIPING RUNS AND COMPONENTS USING THE FOLLOWING GUIDELINES:
   a. CARE MUST BE TAKEN TO MAINTAIN THE INTERNAL CLEANLINESS OF THE PIPE. EXCESSIVE PARTICLES IN THE WATER SYSTEM CAN REDUCE THE EFFICIENCY OF, OR CAUSE DAMAGE TO THE SYSTEM.
   b. INSTALL TYPE "L" HARD COPPER PIPING IN AS SHORT AND DIRECT A PATH AS POSSIBLE TO MINIMIZE THE PRESSURE DROP ACROSS THE PIPING. REFER TO THE PIPE SIZING CHART ON THE FOLLOWING PAGE (12 OF 27).
   c. INSTALL PIPE VIBRATION ISOLATORS AT THE R1200 CHILLER (P) ON BOTH SUPPLY AND RETURN LINES.
   d. INSTALL A DRAIN AT THE BASE OF EVERY RISE TO ALLOW FOR COMPLETE DRAINAGE OF PIPING.
   e. INSTALL AIR VENTS AT ALL HIGH POINTS IN THE SYSTEM TO ELIMINATE AIR FROM THE SYSTEM.
   f. PROPERLY SUPPORT ALL PIPING WHERE REQUIRED.
   g. INSTALL HEAT TRACE ON ALL PIPING EXPOSED TO LOW AMBIENT TEMPERATURES (34°F [1°C] OR BELOW) AND COVER WITH A SUITABLE THICKNESS OF CLOSED-CELL, UV RESISTANT INSULATION. ROUTE POWER FOR HEAT TRACE FROM A SEPARATELY FUSED DISCONNECT. IDENTIFY DISCONNECT AS HEAT TRACE POWER SOURCE WITH A WARNING THAT POWER MUST NOT BE TURNED OFF EXCEPT WHEN UNIT IS BEING SERVICED.
   h. PROPERLY SLEEVE AND INSULATE PIPE PENETRATIONS THROUGH ALL ROOF AND/OR WALL PENETRATIONS TO PROTECT PIPE FROM POTENTIAL DAMAGE.
   j. PROVIDE AND INSTALL A 12' LONG LOOP OF 1 1/2" OPAQUE FIBER REINFORCED HOSE BETWEEN SUPPLY AND RETURN OUTLETS IN EQUIPMENT ROOM TO ALLOW FOR START-UP AND NO LOAD TESTING OF R1200 CHILLER. HOSE WILL BE USED BY HMSA FOR CONNECTION OF HEAT EXCHANGER AT TIME OF INSTALLATION.

2) PROVIDE AND INSTALL A BALL VALVE ON BOTH THE THE SUPPLY AND RETURN LINES AT THE HEAT EXCHANGER (N) UNIT TO ALLOW ISOLATION FOR SERVICE OR UNIT REPLACEMENT IF NECESSARY. THE R1200 CHILLER INCLUDES FACTORY INSTALLED ISOLATION VALVES AT BOTH THE SUPPLY AND RETURN CONNECTIONS.

3) PROVIDE AND INSTALL A PRESSURE GAUGE (0-100 PSI) AND A TEMPERATURE GAUGE (0-100° F) ON THE SUPPLY SIDE BETWEEN THE BALL VALVE AND HEAT EXCHANGER (N) TO MEASURE SUPPLY PRESSURE AND TEMPERATURE AT THE UNIT.

4) PROVIDE AND INSTALL A TEMPERATURE GAUGE (0-100° F) AND AN IN-LINE FLOW METER (5-25 GPM) ON THE RETURN SIDE BETWEEN THE HEAT EXCHANGER (N) AND BALL VALVE TO MEASURE RETURN TEMPERATURE AND FLOW. A BLUE-WHITE SERIES F-420N VARIABLE AREA FLOW METER SIZED TO MATCH THE PIPING LINE SIZE IS RECOMMENDED. PROVIDE A MOVEABLE SLEEVE OVER THE FLOW METER TO PREVENT EXPOSURE TO LIGHT WHEN METER IS NOT BEING READ. PROLONGED EXPOSURE TO LIGHT MAY PROMOTE BIOLOGICAL GROWTH IN THE WATER LINES.

5) COMPLETE THE INSTALLATION OF THE R1200 CHILLER PER THE REQUIREMENTS IN THE R1200 INSTRUCTION MANUAL PROVIDED WITH THE SYSTEM.

6) CLOSE ISOLATION VALVES ON R1200 AND FLUSH PIPING WITH CITY WATER UNTIL STREAM BECOMES CLEAR. FLUSH FOR AN ADDITIONAL 20 MINUTES. CLOSE DRAIN AND PERFORM LEAK CHECK FOR A MINIMUM OF 30 MINUTES AT CITY WATER PRESSURE. IT IS RECOMMENDED TO FILL THE SYSTEM THROUGH A WATER METER TO HELP ESTABLISH THE CORRECT QUANTITY OF GLYCOL SOLUTION REQUIRED AT FILL. OPEN ALL DRAINS (INCLUDING DRAINS INSTALLED AT THE BASE OF EVERY RISE) AND DRAIN ALL PIPING RUNS. USE COMPRESSED DRY AIR OR DRY NITROGEN TO DRY PIPING PRIOR TO CHARGING SYSTEM WITH GLYCOL SOLUTION.

7) FILL 30 GALLON TANK AND ENTIRE WATER PIPING LOOP WITH A MIXTURE OF PROPYLENE GLYCOL (35% BY VOLUME) AND POTABLE DISTILLED WATER. PURGE ALL AIR FROM THE LINES. **DO NOT USE AUTOMOTIVE ANTIFREEZE. USE OF AUTOMOTIVE ANTIFREEZE WILL DAMAGE SYSTEM.** THE USE OF AN EXTERNAL PUMP MAY BE REQUIRED TO PROPERLY FILL THE SYSTEM WITH GLYCOL SOLUTION. IF CITY WATER IS USED IN PLACE OF POTABLE DISTILLED WATER, IT MUST BE RUN THROUGH A DE-IONIZATION FILTER. DO NOT ENERGIZE R1200 CHILLER. DO NOT USE THE PUMP ON THE R1200 TO FILL THE SYSTEM. SEE THE LIST OF ACCEPTABLE PROPYLENE GLYCOL VENDORS ON FOLLOWING PAGE (12 OF 27).

8) PROVIDE ADDITIONAL PROPYLENE GLYCOL (35% BY VOLUME) AND DISTILLED WATER MIXTURE FOR USE BY START-UP AGENT TO TOP OFF SYSTEM WHEN NO LOAD START-UP IS PERFORMED. ADDITIONAL GLYCOL/WATER MIXTURE (APPROXIMATELY 5 GALLONS) WILL ALSO BE REQUIRED FOR USE BY HITACHI WHEN THE MAGNET IS DELIVERED.

9) COMPLETE AND FAX THE INSTALLER'S PRE-STARTUP CHECKLIST (INCLUDED WITH SYSTEM DOCUMENTATION, ADDITIONAL COPY AT RIGHT) TO HASKRIS COMPANY NO LESS THAN 5 BUSINESS DAYS PRIOR TO DESIRED NO LOAD START-UP DATE FOR CHILLER.

10) SCHEDULE NO LOAD START-UP WITH LOCAL HASKRIS AUTHORIZED START-UP AGENT AT LEAST 5 DAYS IN ADVANCE. NO LOAD START-UP SCHEDULING IS SUBJECT TO TECHNICIAN AVAILABILITY.

11) THE R1200 CHILLER MUST BE INSTALLED AND STARTED NO MORE THAN SIXTY (60) DAYS AFTER DELIVERY. FAILURE TO DO SO WILL RESULT IN ADDITIONAL EXPENSE TO THE END USER FOR REPLACEMENT OF PUMP SEALS.

INSTALLER'S CHECKLIST
HASKRIS OUTDOOR CHILLER R1200
FOR THE HITACHI OASIS MRI

Installer's Checklist for Haskris R1200, S/N HB_____

Project Name_____ Location_____

Note: *Checklist MUST be completed for "No Load" Start-up to be scheduled. R1200 cannot be started until completed checklist has been returned via fax to Haskris no less than 5 business days prior to no load start-up.*

Chiller must be installed and started no more than thirty (30) days after delivery.
Failure to do so will result in additional expense to the end user for replacement of pump seals

Directions: Fax completed checklist to Haskris (Fax#: 847-956-6595) no less than 5 business days prior to desired R1200 No Load Start-Up date. Haskris will notify the Installer of the Haskris Authorized Start-Up Agent. Installer will contact Haskris Authorized Start-Up Agent at least 2 business days in advance. No Load Start-Up subject to Technician availability. Start-Up will be done during normal working hours. Installer will issue a Credit Card Purchase Order to Haskris Start-Up Agent if any items are found incomplete and resulting in delay of system start-up.

Checklist:

___ Unit is securely mounted and level.
___ No Refrigeration Service Contractor labels have been affixed to the interior or exterior of the R1200
___ Clearances for service, ventilation, and access to control panel are adequate per R1200 Instruction Manual
___ Electrical service to R1200 per table below (Record inlet Voltage and Branch Circuit Rating):

Nominal Power: 480V (+5%,-10%)-3Ø-60Hz, MCA: 31.7A, MOCP 40A				
Record Voltage at Disconnect (V)	L1-L2		Confirm and Record Size of Time Delay Breaker (Fusing) Supplying Chiller (A)	
	L2-L3			
	L1-L3			

___ Remove the rubber plug from inside wall of the 30 gallon tank
___ Confirm proper phase by verifying the red 'FAULT' LED is NOT lit on phase monitor. (See sect. 2.5.1)
___ Hard copper piping with vents/drains as required and properly supported
___ Vibration Isolators installed at R1200 on both water supply and return lines
___ Separately fused heat trace covered with suitable thickness of closed-cell, UV resistant insulation on all piping exposed to low ambient temperatures, as required.
___ Supply/Return lines labeled over insulation.
___ 12' long loop of 1-1/2" reinforced opaque hose between supply and return outlet in equipment room provided.
___ Supply and return ball valves provided at indoor WW3
___ Supply side temperature (0-100° F) and pressure (0-100 psig) gauges provided at indoor heat exchanger (WW3)
___ Return side temperature (0-100° F) and flow (5-25 gpm) gauges provided at indoor heat exchanger
___ All external piping flushed with water and dried per R1200 Instruction Manual.
___ Leak check performed and no leaks in external piping loop per R1200 Instruction Manual.
___ System (30 gallon tank & entire piping loop) is filled with _____ gallons of glycol/distilled water solution
___ Reservoir is at tank full level
___ Lines air purged per R1200 Instruction Manual
___ Glycol solution _____% (Record actual measurement here).
___ Install has provided an additional 10 gallons of propylene glycol/distilled water (35% by volume) to top off system when no-load start-up is performed.

Install Completed By:

Company:_____ Phone: _____Fax:_____

Installer Name:_____ Title:_____

Signature: _____

Requested Start-Up Date: _____ Time:_____

Please contact Haskris Co. if you have any questions.

Haskris Co.
100 Kelly Street
Elk Grove Village, IL 60007

Phone: 847-956-6420
Fax: 847-956-6595

HASKRIS every solution is unique.

CHILLER INSTALLATION SPECIFICATIONS

PIPE SIZE CALCULATION

THE CUSTOMER'S ARCHITECT/ENGINEER IS RESPONSIBLE FOR UTILIZING THE FOLLOWING INFORMATION TO CALCULATE THE APPROPRIATE NOMINAL SIZE OF THE COPPER WATER LINES BETWEEN THE R1200 OUTDOOR CHILLER UNIT AND THE HEAT EXCHANGER LOCATED IN THE EQUIPMENT ROOM.

PIPE CALCULATION FACTORS

NOMINAL PIPE SIZE	PIPE FACTOR	90° ELBOW	90° LONG RADIUS ELBOW	45° ELBOW
1 1/2"	3.72	4.2	2.1	2.9
2"	0.95	5.1	2.6	3.6
2 1/2"	0.32	5.4	2.7	3.8
3"	0.13	6.7	3.4	4.7

1. CALCULATE THE ENTIRE APPARENT LENGTH OF THE PIPING FROM THE LOCATION OF THE R1200 (OUTDOOR CHILLER) TO THE HEAT EXCHANGER LOCATED IN THE EQUIPMENT ROOM. THE "TOTAL RUN" USED FOR THESE CALCULATIONS IS THE SUM OF THE SUPPLY AND RETURN LINE LENGTH (i.e.: A 50' RUN EACH WAY BETWEEN UNITS WOULD BE A 100' TOTAL RUN). STARTING WITH 1 1/2" PIPE AND LONG RADUS 90° ELBOWS WHERE POSSIBLE, CALCULATE THE FOLLOWING:

TOTAL RUN (FT.)_____ X FACTOR FROM CHART_____ = _____ (A)

2. FIND THE TOTAL NUMBER OF FITTINGS (LONG RADIUS 90° ELBOWS SHOULD BE USED WHERE POSSIBLE)

90° ELBOWS_____ X FACTOR FROM CHART_____= _____ (B)
90° LR ELBOWS_____ X FACTOR FROM CHART_____= _____ (C)
45° ELBOWS_____ X FACTOR FROM CHART_____= _____ (D)

3. ADD (A) + (B) + (C) + (D) =_____(E)

4. MULTIPLY (E) BY 1.26 (GLYCOL FACTOR) =_____ (F) (MAXIUM ALLOWABLE VALUE: 335)

5. IF "F" IS LESS THAN OR EQUAL TO 335, THEN YOUR PIPE SIZE IS 1 1/2". IF "F" IS GREATER THAN 335, REPEAT THE CALCULATIONS AGAIN USING THE NEXT LARGER NOMINAL PIPE SIZE. CONTINUE IN THIS MANNER UNTIL "F" IS LESS THAN OR EQUAL TO 335 TO FIND THE REQUIRED PIPE SIZE.

APPROXIMATE VOLUME OF PIPE RUNS

NOMINAL SIZE (INCHES)	GALLONS/ 100 FEET
1 1/2"	9.5
2"	16.75
2 1/2"	26
3	36.5

CHILLER ANTI-FREEZE

IT IS CRITICAL THAT THE R1200 CHILLER BE FILLED WITH A PROPER MIXTURE PROPYLENE GLYCOL ANTI-FREEZE AND DISTILLED WATER (35% PROPYLENE GLYCOL BY VOLUME). AN IMPROPERLY MIXED SOLUTION WILL HAVE A NEGATIVE IMPACT ON THE EFFICIENCY OF THE CHILLER. **ONLY APPROVED BRANDS MAY BE USED (SEE CHART BELOW). DO NOT USE AUTOMOTIVE ANTIFREEZE. USE OF AUTOMOTIVE ANTIFREEZE WILL DAMAGE THE SYSTEM.**

PROPYLENE GLYCOL SUPPLIER LIST

SUPPLIER	BRAND NAME
DOW CHEMICAL (RECOMMENDED)	DOWFROST
HOUGHTON CHEMICAL	SAFE-T-THERM
INTERSTATE CHEMICAL CO	INTERCOOL NFP
HUNTSMAN PETROCHEMICAL	JEFFCOOL P-155
NOBLE COMPANY	NO-BURST-100

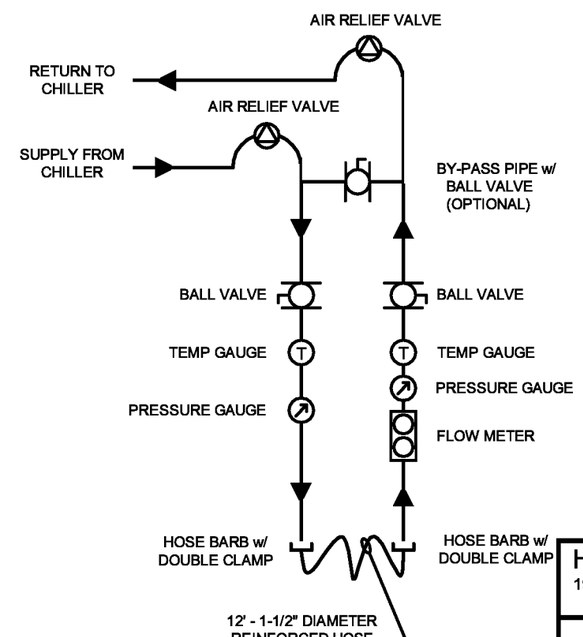

EQUIPMENT ROOM PIPING

SEE CUTOMER/INSTALLING CONTRACTOR'S RESPONSIBILITIES (PG11 OF 27) FOR COMPLETE DETAILS.

HITACHI MEDICAL SYSTEMS AMERICA
1959 SUMMIT COMMERCE PARK TWINSBURG, OH 44087-2371
(800) 800-3106 WWW.HITACHIMED.COM

CHILLER INSTALLATION SPECIFICATIONS

DATE: 04/30/2012 | REVISION: 05/18/2012

ELECTRICAL - LIGHTING

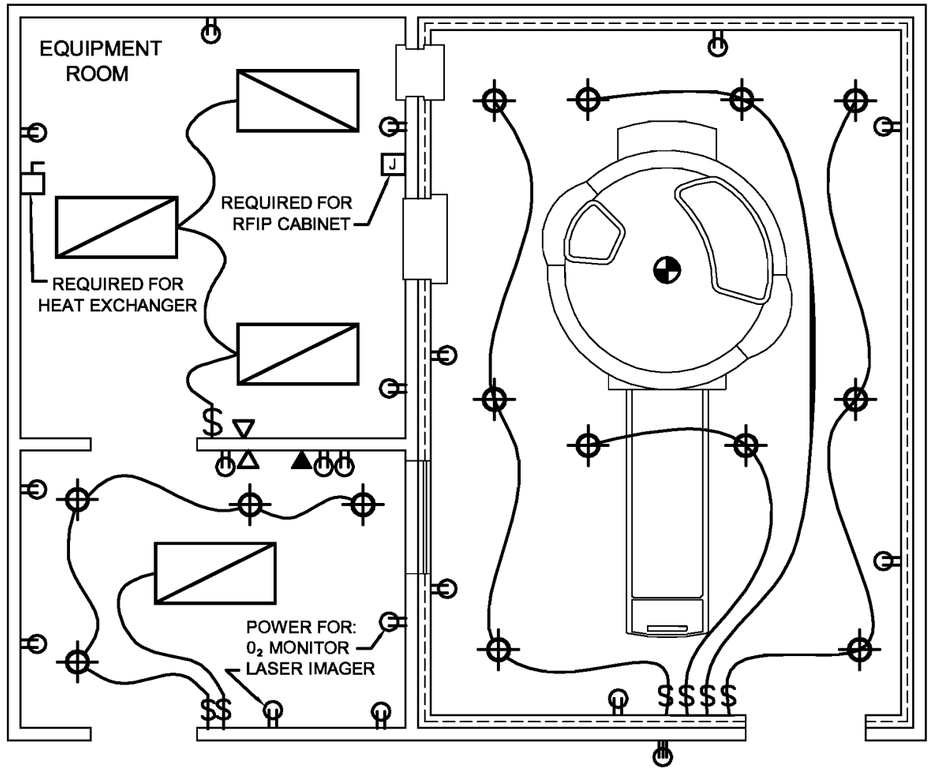

INCANDESCENT FIXTURES (SEE NOTE 1 THIS PAGE)

FLUORESCENT LIGHTS (SEE NOTE 5 THIS PAGE)

120V, 20 AMP DUPLEX OUTLET

TELEPHONE OUTLET

SWITCH

480V, 30A, 3 PHASE, 4 WIRE NEMA L16-30R RECEPTACLE FOR RAMP-UP TOOL

DATA PORT FOR BROAD BAND NETWORK CONNECTION TO STANDARD 1G BASE T LINE. MAY BE THROUGH CUSTOMER'S IN-HOUSE NETWORK

J-BOX FOR REQUIRED POWER

NON-FUSED DISCONNECT FOR REQUIRED POWER

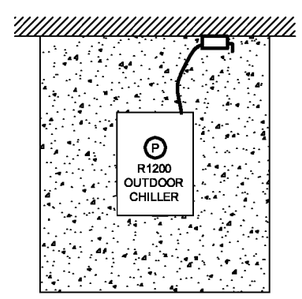

LIGHTING NOTES

THE LIGHTING IN THE SUITE SHOULD BE DESIGNED TO ALLOW MULTIPLE LEVELS OF BRIGHTNESS. THE FOLLOWING POINTS MUST BE REVIEWED TO ENSURE THE PROPER DESIGN OF THE LIGHTING AND ELECTRICAL SYSTEMS FOR THE SUITE.

1) RECESSED CANS AND/OR WALL SCONCES ARE RECOMMENDED. WALL SCONCES SHOULD HAVE THE MINIMAL AMOUNT OF FERROUS MATERIALS POSSIBLE. REMOVABLE ACCESSORIES (SHADES, GRILLS, BAFFLES) MUST BE NON-FERROMAGNETIC. WHEN USING RECESSED CAN LIGHTS, **ONLY HMSA APPROVED UNITS MAY BE USED** . SEE OEM VENDOR PAGE (BACK COVER OF THIS DOCUMENT) FOR APPROVED UNITS. THESE FIXTURES MAY BE ORDERED THROUGH ANY ELECTRICAL SUPPLY HOUSE.

2) WALL SCONCES MAY BE HELPFUL WHEN THE CEILING HEIGHT IS A CONCERN OR TO OBTAIN LOW LEVEL AMBIENT LIGHT.

3) CARE SHOULD BE TAKEN WHEN LOCATING LIGHT FIXTURES. LIGHTS SHOULD NOT BE POSITIONED DIRECTLY ABOVE THE MAGNET GANTRY OR OVER THE TABLE WHERE THEY MIGHT SHINE DIRECTLY INTO THE PATIENT'S EYES.

4) TRACK LIGHTING IS NOT PERMITTED IN THE SCAN ROOM. REMOVABLE LIGHT FIXTURES CAN CREATE A SAFETY RISK. ADDITIONALLY, FIXTURES TEND TO LOOSEN SLIGHTLY IN THE TRACK OVER TIME, ALLOWING MINOR VIBRATIONS THAT MAY CAUSE IMAGE QUALITY ISSUES.

5) FLUORESCENT LIGHTS (INCLUDING COMPACT FLUORESCENT BULBS) ARE NOT PERMITTED IN THE SCAN ROOM. USE ONLY INCANDESCENT OR MRI RATED L.E.D. LIGHTING. REDUCED INCANDESCENT BULB LIFE CAN BE EXPECTED DUE TO THE PULSING OF THE MAGNETIC FIELD IN THE SCAN ROOM. ROUGH USAGE BULBS ARE RECOMMENDED. FLUORESCENT LIGHTS IN THE CONTROL AND EQUIPMENT ROOMS SHOULD NOT BE ON WHEN SCANNING.

6) IF L.E.D. LIGHTS ARE USED, THEY MUST BE TRUE 120V UNITS AND NOT HAVE ANY TYPE OF INTERNAL TRANSFORMER IN EITHER THE BULB OR FIXTURE. WHEN CONFIGURING LIGHTING SCHEMES UTILIZING L.E.D. LIGHTING, CARE MUST BE TAKEN TO ENSURE THE NUMBER OF FIXTURES AND THEIR LOCATION WILL PROVIDE THE LUMEN LEVELS DESIRED. EXTERNAL/REMOTE TRANSFORMERS FOR LED LIGHTING FIXTURES MUST BE LOCATED OUTSIDE OF THE SCAN ROOM AND ELECTRICAL LINES INTO THE SCAN ROOM MUST PASS THROUGH AN EMI FILTER.

7) STANDARD INCANDESCENT RHEOSTAT TYPE AC DIMMERS ARE NOT PERMITTED IN THE MRI SUITE (SCAN, CONTROL AND EQUIPMENT ROOMS). A MULTI-SWITCH DESIGN SHOULD BE USED TO ADJUST LIGHTING LEVELS IN THE SCAN ROOM. LIGHTING NEEDS RANGE FROM LOW LEVELS FOR PATIENT COMFORT DURING SCANNING (BELOW 20 LUMENS/SF), TO MID LEVELS (20-30 LUMENS/SF) FOR PATIENT TRANSFER AND HOUSEKEEPING FUNCTIONS, TO HIGHER LEVELS (40+ LUMENS/SF) FOR PATIENT INJECTIONS AND EQUIPMENT MAINTENANCE, PER THE RECOMMENDATIONS OF THE ILLUMINATION ENGINEERING SOCIETY OF NORTH AMERICA (IESNA).

8) LIGHTING CIRCUITS MUST NOT CREATE A PERIPHERAL LOOP AROUND THE MAGNET. THIS WILL CAUSE INTERFERENCE TO THE SYSTEM WHEN IMAGING.

9) EQUIPMENT ROOM LIGHTING SHOULD BE A MINIMUM OF 40 LUMENS/SQ.-FT.

10) THE ELECTRICAL POWER FOR THE LIGHTING AND RECEPTACLES IN THE SUITE IS TO BE DERIVED FROM THE MRI SUB PANEL AND SHARE A COMMON GROUND (SEE THE ELECTRICAL SHEETS FOR FURTHER DETAILS). THE ELECTRICAL CONTRACTOR MUST COORDINATE BOTH THE NUMBER AND LOCATION OF EMI FILTERS WITH THE RF VENDOR.

11) WHILE SPECIFIC COMPONENTS MAY REQUIRE OUTLETS AS NOTED, ADDITIONAL CONVENIENCE OUTLETS ARE REQUIRED IN THE SUITE (MINIMUM ONE PER WALL) FOR SERVICING AND MAINTENANCE.

12) OUTLETS LOCATED ON WALLS WITH SURFACE MOUNTED WIREWAYS MUST BE INSTALLED HIGH ENOUGH TO ENSURE THEY WILL NOT BE COVERED BY THE WIREWAY (TOP AT 24" A/FF).

13) LOCATION OF NETWORK CONNECTIONS, TELEPHONE LINE JACKS, REQUIRED OUTLETS, ETC. WILL VARY. NETWORK CONNECTIONS AND TELEPHONE LINE JACKS ARE NOT PERMITTED IN THE SCAN ROOM. REFER TO SITE SPECIFIC DRAWING FOR ACTUAL PLACEMENT.

14) REQUIREMENTS FOR ALL NON HITACHI SUPPLIED COMPONENTS MUST BE VERIFIED WITH EQUIPMENT VENDOR OR MANUFACTURER FOR ACTUAL PLACEMENT.

ELECTRICAL - PANEL SCHEMATIC

OASIS MRI SUITE

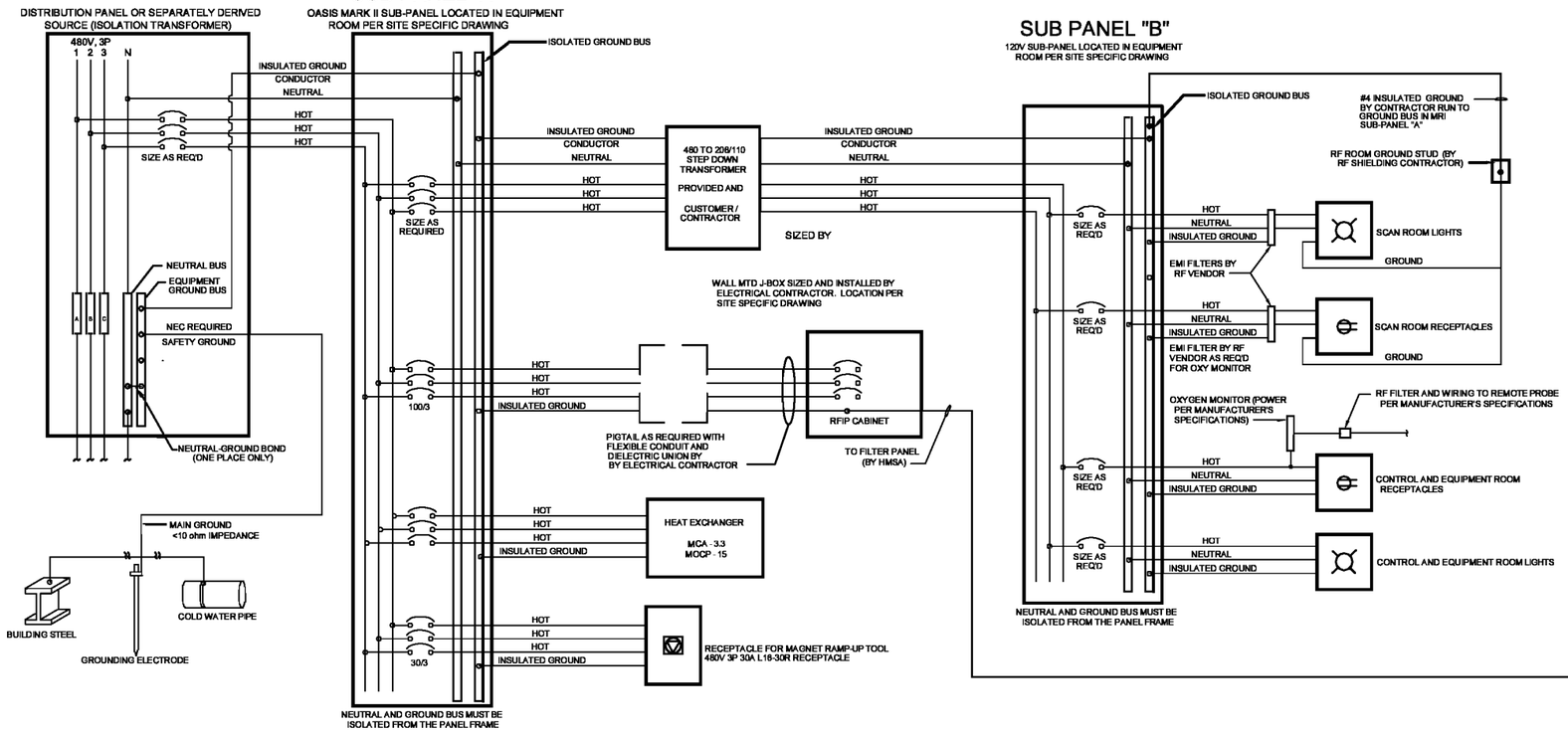

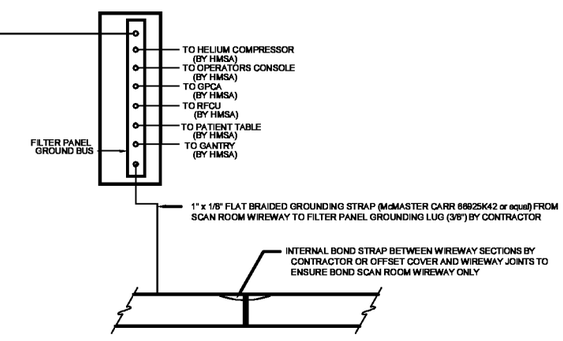

CHILLER SYSTEM WHEN SUPPLIED BY HMSA

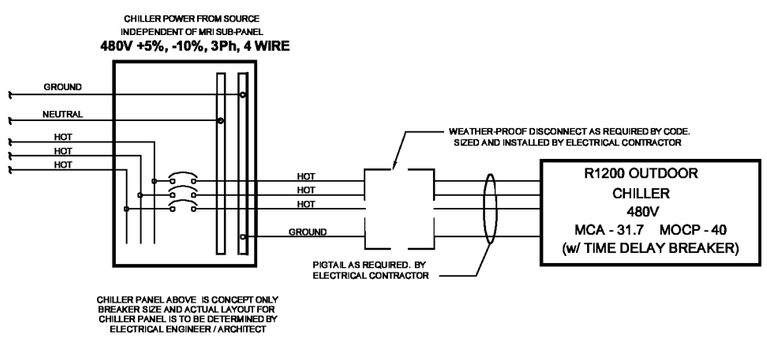

NOTE:

1) CUSTOMER'S ELECTRICAL ENGINEER IS RESPONSIBLE FOR SIZING PANELS, CIRCUITS AND WIRE SIZE AS REQUIRED.

2) IF A UPS SYSTEM IS TO BE INSTALLED, FOR THE OASIS MARK II, THE AMPACITY OF THE CIRCUIT MUST BE ADJUSTED TO COMPENSATE FOR THE POWER CONSUMPTION OF THE UPS. CONTACT SITE PLANNING DEPARTMENT FOR MORE INFORMATION.

3) QUANTITY AND LOCATION OF RF FILTERS FOR CIRCUITS TO SCAN ROOM TO BE COORDINATED BETWEEN THE CONTRACTOR AND RF SHIELDING VENDOR

4) ALL WORK SHALL CONFORM TO APPLICABLE BUILDING CODES.

5) ALTHOUGH THE MRI SUB-PANEL SHOWN ON THIS PAGE MAY BE LOCATED IN CLOSE PROXIMITY TO THE GANTRY, IT DOES NOT EFFECT SYSTEM PERFORMANCE. OTHER THREE PHASE PANELS OR WIRING WITHIN THE 20' RESTRICTED AREA ON THE SITE SPECIFIC PLAN MAY HAVE AN ADVERSE EFFECT ON IMAGE QUALITY. REFER TO PROXIMITY CHARTS FOR FURTHER INFORMATION.

6) THE USE OF STANDARD FERROUS RIGID CONDUIT AND WORK BOXES WITHIN THE SCAN ROOM IS ACCEPTABLE. **WHIPS TO AND BETWEEN LIGHT FIXTURES WITHIN THE SCAN ROOM SHOULD BE FLEXIBLE ENT IF PERMISSIBLE** . THE ELECTRICAL CONTRACTOR IS RESPONSIBLE FOR SECURING ALL CONDUITS (INCLUDING FLEXIBLE WHIPS) TO PREVENT CONTACT WITH OTHER METALLIC ITEMS (I.E.: CEILING GRID, RF SHIELD) OR MOVEMENT CAUSED BY THE PULSATION OF THE MAGNETIC FIELD.

7) IF A FACILITY'S ONLY POWER IS 208V, 3 PHASE, AN ALTERNATE PANEL SCHEMATIC UTILIZING 208V, 3 PHASE AS THE PRIMARY POWER IN CONJUNCTION WITH STEP-UP TRANSFORMERS IS AVAILABLE. CONTACT THE SITE PLANNING DEPARTMENT TO OBTAIN A COPY.

HITACHI MEDICAL SYSTEMS AMERICA
1959 SUMMIT COMMERCE PARK TWINSBURG, OH 44087-2371
(800) 800-3106 WWW.HITACHIMED.COM

ELECTRICAL - PANEL SCHEMATIC

DATE: 04/30/2012	REVISION: 05/18/2012
OASIS MARK II STANDARD DETAILS	PAGE 14 OF 27

ELECTRICAL - GENERAL NOTES

OASIS MARK II POWER REQUIREMENTS:

VOLTAGE: 480V, 3 PHASE, 4 WIRE, DELTA or WYE
REGULATION: +/- 5% REGULATION NO LOAD TO FULL LOAD
FREQUENCY: 50/60 HZ +/- LESS THAN 1%
LOAD CAPACITY: 75 KVA
CIRCUIT BREAKER SIZE: 100 AMPS

R1200 CHILLER POWER REQUIREMENTS:

VOLTAGE: 480V, 3 PHASE, 4 WIRE, DELTA or WYE
REGULATION: + 5%, -10%
FREQUENCY: 50/60 HZ +/- LESS THAN 1%
CIRCUIT BREAKER SIZE: MCA 31.7 AMPS, MOCP 40 AMPS

NOTE: THIS IS THE LOAD FOR THE OASIS MARK II SYSTEM ONLY. THE LOADS FOR THE CHILLER, HEAT EXCHANGER AND SUITE LIGHTS/OUTLE MUST BE CALCULATED SEPARATELY. TOTAL ELECTRICAL SERVICE REQUIREMENTS FOR THE SUITE AND EQUIPMENT MUST BE DETERMINED BY AN ELECTRICAL ENGINEER OR OTHER QUALIFIED INDIVIDUAL.

POWER CONFIGURATION MUST BE A TRUE 3 PHASE SYSTEM. 3 WIRE CORNER GROUNDED TRANSFORMERS ARE NOT ALLOWED

OASIS MARK II POWER CONSUMPTION:

IN RUSH AT POWER ON: 31 KW
SYSTEM "OFF" AT NIGHT: 8.3 KW
SYSTEM "ON" AT IDLE: 11KW
LOW LEVEL SCAN (S/N SCAN): 20 KW
HIGH LEVEL SCAN (GC MAX SEQUENCE): 75 KW

PROVIDED BY HITACHI MEDICAL SYSTEMS AMERICA:

HMSA WILL BE RESPONSIBLE FOR THE FOLLOWING:

1) AC POWER WIRING AND CONNECTIONS FROM THE RFIP CABINET TO ALL SYSTEM COMPONENTS EXCEPT THE HEAT EXCHANGER.
2) GROUNDING CONDUCTORS FROM RFIP CABINET TO ALL SYSTEM COMPONENTS EXCEPT HEAT EXCHANGER.
3) PROVIDING AND INSTALLING ALL SYSTEM INTERCONNECT CABLES. THIS BECOMES THE CUSTOMER'S RESPONSIBILITY SHOULD UNION LABOR OR OTHER FACTORS PROHIBIT INSTALLATION BY HMSA PERSONNEL.

PROVIDED BY THE ELECTRICAL CONTRACTOR:

THE ELECTRICAL CONTRACTOR WILL BE RESPONSIBLE FOR SUPPLYING AND INSTALLING THE FOLLOWING:

1) CIRCUIT BREAKER PANEL (MRI SUB-PANEL) TYPICALLY LOCATED IN THE EQUIPMENT ROOM. THIS PANEL SHALL ONLY SERVE LOADS AS SHOWN ON THE WIRING SCHEMATIC (PG. 14 OF 27). THE MRI SUB-PANEL SHALL BE PROVIDED WITH BOLT-ON BRANCH CIRCUIT BREAKERS AND AN ISOLATED GROUND BUS.
2) THE MRI SUB-PANEL FEEDER SHALL BE COPPER CONDUCTOR, SIZED AS REQUIRED BY NEC AND AS REQUIRED TO PROVIDE NECESSARY VOLTAGE LEVEL AT RFIP CABINET. THE FEEDERS SHALL BE FROM A CIRCUIT BREAKER OR FUSED SWITCH SIZED PER NEC IN A DISTRIBUTION PANEL AT THE SERVICE ENTRANCE OR THE SOURCE OF THE SEPARATELY DERIVED SYSTEM.
3) BRANCH CIRCUIT WIRING FROM THE MRI SUB PANEL TO THE RFIP CABINET AS SHOWN ON THE SCHEMATIC (PG14 OF 27), A PIGTAIL LONG ENOUGH TO ALLOW THE RFIP TO BE MOVED 6' PLUS AN ADDITIONAL 5' FOR USE INTERNAL TO THE CABINET IS REQUIRED. A 2" FLEXIBLE CONDUIT FROM THE JUNCTION BOX TO THE CABINET WITH A DIELECTRIC UNION AT ONE END IS ALSO REQUIRED.
4) INSTALL CRIMP TERMINAL LUGS ON POWER WIRING TO RFIP CABINET. SIZE AS APPROPRIATE FOR WIRE GAUGE AND MOUNTING TO 3/8" ATTACHMENT STUD IN RFIP CABINET.
5) IF THE MRI SUB PANEL IS NOT LOCATED IN THE EQUIPMENT ROOM, A SURFACE MOUNTED DISCONNECT SWITCH (NON-FUSED) IS REQUIRED IN CLOSE PROXIMITY TO THE RFIP CABINET. SIZE AS REQUIRED BY CODE.
6) BRANCH CIRCUITS AND WIRING TO BOTH THE OUTDOOR COMPONENT OF THE CHILLER SYSTEM (TYPICALLY SUPPLIED BY HMSA) AND THE HEAT EXCHANGER IN THE EQUIPMENT ROOM (PG 14 OF 27).
7) L16-30R RECEPTACLE FOR MAGNET RAMP UP TOOL. LOCATION AS SHOWN ON SITE SPECIFIC DRAWING.
8) LIGHTING AND CONTROLS IN MRI SCAN, CONTROL, AND EQUIPMENT ROOMS (PG. 13 OF 27).
9) 120V RECEPTACLES WITH ISOLATED GROUND TERMINALS IN MRI SCAN, CONTROL, AND EQUIPMENT ROOMS.
10) ISOLATED GROUNDING SYSTEM FOR ALL LOADS FED BY MRI SUB-PANEL (SEE GROUNDING NOTES).
11) RF SHIELD GROUNDING WITH AN INSULATED #4 AWG COPPER GROUNDING CONDUCTOR FROM RF SHIELD GROUND STUD TO THE FILTER PANEL OR TO ISOLATED GROUND BUS IN MRI SUB-PANEL.
12) 1" x 1/8" FLAT BRAIDED GROUND STRAP FROM FILTER PANEL TO SCAN ROOM WIREWAY AND BONDING BETWEEN WIREWAY SECTIONS IN SCAN ROOM.
13) CONDUIT AND ENCLOSURE GROUNDING FOR ALL FEEDER AND BRANCH WIRING PER NEC REQUIREMENTS (SEE GROUNDING NOTES).
14) CONFIGURATION AND INSTALLATION OF ANY POWER CONDITIONING OR UPS EQUIPMENT. SEE NOTE BELOW AND CONTACT THE SITE PLANNING DEPARTMENT FOR FURTHER INFORMATION.
15) BRANCH CIRCUIT WIRING FROM BUILDING DISTRIBUTION SYSTEM FOR LASER IMAGER AND EMERGENCY EXHAUST FAN PER MANUFACTURER'S SPECIFICATION AS REQUIRED PER NEC REQUIREMENTS.
16) WIREWAYS AS SPECIFIED ON HMSA SITE SPECIFIC DRAWING. WIREWAYS MUST BE NON-FERROUS METAL AND ARE TYPICALLY 6 " X 24" WIREWAY WITH THREE (3) DIVIDERS (FOUR [4]- 6" X 6" SECTIONS) WITH REMOVABLE COVERS.
17) OUTLETS, CONDUITS, JUNCTION BOXES AS NOTED ON HMSA SITE SPECIFIC DRAWING.
18) **THE USE OF STANDARD FERROUS RIGID CONDUIT AND WORK BOXES WITHIN THE SCAN ROOM IS ACCEPTABLE. WHIPS TO AND BETWEEN LIGHT FIXTURES WITHIN THE SCAN ROOM SHOULD BE FLEXIBLE ENT (ELECTRICAL NON-METALIC TUBING) IF PERMISSIBLE. THE ELECTRICAL CONTRACTOR IS RESPONSIBLE FOR SECURING ALL CONDUITS (INCLUDING FLEXIBLE WHIPS TO PREVENT CONTACT WITH OTHER METALLIC ITEMS (i.e.: METAL STUDS, CEILING GRID, RF SHIELD) OR MOVEMENT CAUSED BY THE PULSATION OF THE MAGNETIC FIELD.**

NOTE: SHOULD A UPS SYSTEM BE REQUIRED, ONLY SYSTEMS THAT HAVE BEEN TESTED AND FOUND ACCEPTABLE BY HMSA ARE RECOMMENDED. RECOMMENDED MINIMUM CAPACITY, 112.5 KVA. CONTACT THE SITE PLANNING DEPARTMENT FOR ADDITIONAL INFORMATION.

PROVIDED BY THE RF SHIELDING VENDOR:

THE RF VENDOR WILL BE RESPONSIBLE FOR SUPPLYING AND INSTALLING THE FOLLOWING:

1) EMI FILTERS AT EACH LOCATION WHERE AN ELECTRICAL FEED PASSES THROUGH THE RF SHIELDING. THE LOCATION AND NUMBER OF THESE FILTERS MUST BE COORDINATED WITH THE ELECTRICAL CONTRACTOR.
2) EMI FILTER AS REQUIRED TO MOUNT OXYGEN MONITOR PROBE IN SCAN ROOM WITH MONITOR IN REMOTE LOCATION.
3) RF WAVEGUIDES AT EACH LOCATION WHERE AN HVAC DUCT OR AIR INLET PASSES THROUGH THE RF SHIELDING. THE LOCATION AND NUMBER OF THESE WAVEGUIDES MUST BE COORDINATED WITH THE HVAC CONTRACTOR
4) A GROUND STUD ON THE RF SHIELD. THIS GROUND STUD SHALL BE CONNECTED TO THE GROUND BUS OF THE FILTER PANEL (OR ISOLATED GROUND BUS IN THE MRI SUB-PANEL) WITH AN INSULATED #4 AWG COPPER GROUNDING CONDUCTOR AS NOTED IN THE ELECTRICAL CONTRACTOR SECTION.

GROUNDING NOTES

AN ISOLATED GROUNDING SYSTEM SHALL BE PROVIDED FOR ALL LOADS CONNECTED TO THE MRI SUB-PANEL AS FOLLOWS:

1) AN ISOLATED GROUND BUS SHALL BE PROVIDED IN THE MRI SUB-PANEL. THIS BUS SHALL BE INSULATED FROM THE PANEL ENCLOSURE.
2) AN INSULATED COPPER CONDUCTOR SHALL BE RUN FROM THE SYSTEM MAIN GROUND BUS (THE POINT WHERE THE NEUTRAL CONDUCTOR OF THE ELECTRICAL SERVICE OR SEPARATELY DERIVED POWER SOURCE IS BONDED TO THE GROUNDING ELECTRODE CONDUCTOR) TO THE ISOLATED GROUND BUS IN THE MRI SUB-PANEL. THIS CONDUCTOR SHALL BE SIZED AS A NEUTRAL CONDUCTOR AND SHALL BE RUN IN CONDUIT ALONG WITH THE FEEDER CONDUCTORS SUPPLYING THE PANEL.
3) AN INDIVIDUAL INSULATED COPPER CONDUCTOR SHALL BE RUN FROM THE ISOLATED GROUND BUS FOR EACH CIRCUIT ORIGINATING IN THE MRI SUB-PANEL TO THE GROUND TERMINAL OF THE LOAD SERVED. GROUNDING CONDUCTORS SHALL BE THE SAME SIZE AS CIRCUIT CONDUCTORS AND RUN IN CONDUIT WITH BRANCH CIRCUIT CONDUCTORS.

RACEWAY AND ENCLOSURE GROUNDING SHALL BE PROVIDED AS REQUIRED BY NEC FOR ALL FEEDER AND BRANCH CIRCUIT WIRING AS FOLLOWS:

1) ALL FEEDER AND BRANCH CIRCUIT CONDUCTORS SHALL BE INSTALLED IN STEEL CONDUIT AND BOXES TO SHIELD CONDUCTORS FROM MAGNETIC INTERFERENCE. ALL CONDUITS SHALL BE SECURED IN SUCH A MANNER AS TO PREVENT POTENTIAL MOVEMENT AND ENSURE PROPER GROUNDING.
2) METALLIC CONDUIT AND BOXES SHALL BE BONDED TOGETHER BY MEANS OF APPROVED CONNECTORS INSTALLED IN ACCORDANCE WITH NEC REQUIREMENTS WITH BONDING JUMPERS WHERE NECESSARY TO PROVIDE A CONDUCTIVE GROUNDING PATH FROM EACH OUTLET BACK TO MAIN SYSTEM GROUND AT ELECTRICAL SERVICE OR SOURCE OF SEPARATELY DERIVED SYSTEM.
3) GROUNDED METALLIC RACEWAY SYSTEM SHALL BE ISOLATED FROM THE RFIP CABINET AND OTHER SYSTEM COMPONENTS AS WELL AS EMI FILTERS BY COUPLING WITH DIELECTRIC CONNECTORS OR NON-METALLIC CONDUIT. THE GROUNDING OF EQUIPMENT ISOLATED FROM METALLIC RACEWAY SYSTEM SHALL BE BY MEANS OF ISOLATED GROUNDING SYSTEM CONDUCTOR.
4) RF SHIELD GROUNDING SHALL BE PROVIDED BY INSTALLATION OF AN INSULATED #4 AWG COPPER CONDUCTOR RUN FROM RF ROOM GROUND STUD TO THE ISOLATED GROUND BUS IN THE MRI SUB-PANEL. GROUNDING OF THE BUS IN FILTER PANEL TO RFIP CABINET WILL BE PROVIDED BY HMSA.
5) ELECTRICAL SYSTEM GROUNDING SHALL BE VERIFIED BY ELECTRICAL CONTRACTOR. THE SYSTEM NEUTRAL SHALL BE GROUNDED AT ONE POINT ONLY. THE NEUTRAL MAY BE GROUNDED AT EITHER THE SERVICE ENTRANCE OR AT THE SOURCE OF THE SEPARATELY DERIVED SYSTEM BY CONNECTION TO A NEC REQUIRED GROUNDING ELECTRODE SYSTEM.
6) GROUNDING ELECTRODE SYSTEM SHALL BE VERIFIED AND SUPPLEMENTED IF NECESSARY BY THE ELECTRICAL CONTRACTOR. THE GROUNDING ELECTRODE SYSTEM SHALL BE PROVIDED AS REQUIRED BY NEC AND SHALL INCLUDE THE FOLLOWING (WHERE AVAILABLE) AND BONDED TOGETHER: METAL UNDERGROUND WATER SERVICE PIPE, METAL FRAME OF BUILDING AND OTHER ELECTRODES REQUIRED BY NEC. IF NOT EXISTING, THE ELECTRICAL CONTRACTOR SHALL PROVIDE ONE OR MORE DRIVEN GROUND ROD OR PLATE ELECTRODES BONDED TO THE EXISTING GROUNDING ELECTRODE SYSTEM BY MEANS OF A CONDUCTOR SIZED PER NEC. THE RESISTANCE TO GROUND OF THE MAIN ELECTRODE SHALL BE NO MORE THAN 10 OHMS.

HITACHI MEDICAL SYSTEMS AMERICA
1959 SUMMIT COMMERCE PARK TWINSBURG, OH 44087-2371
(800) 800-3106 WWW.HITACHIMED.COM

WIREWAYS

WIREWAY NOTES

ALL WORK IS TO CONFORM TO APPLICABLE BUILDING CODES. THE GENERAL CONTRACTOR IS RESPONSIBLE FOR PROVIDING ALL WIREWAYS, JUNCTION BOXES, AND CONDUITS AS INDICATED IN THESE STANDARD DETAILS AND AS SHOWN ON THE CUSTOMER'S SITE SPECIFIC HMSA DRAWING.

1) THE WIREWAYS PROVIDE THE METHOD AND MEANS TO HOUSE AND PROTECT THE SYSTEM INTERCONNECTION CABLING. EACH WIREWAY COMPARTMENT HOUSES CABLES THAT PERFORM DIFFERENT SPECIFIC FUNCTIONS. FOR THE EXACT RUNS REQUIRED, REFER TO YOUR HMSA SITE SPECIFIC DRAWING.

2) THE WIREWAYS FOR THE SYSTEM MUST BE METALLIC AND PROVIDE FOR RF SEPARATION OF THE CABLES. WOOD AND PVC WIREWAYS ARE NOT ACCEPTABLE. NON-FERROMAGNETIC (ALUMINUM OR STAINLESS STEEL) WIREWAYS MUST BE USED IN THE SCAN ROOM. THE CONTRACTOR IS RESPONSIBLE FOR ENSURING THAT THE MATERIAL CHOSEN COMPLIES WITH APPLICABLE BUILDING CODES.

3) THE WIREWAY MUST PROVIDE FOUR (4) INDIVIDUAL COMPARTMENTS. THIS MAY BE ACCOMPLISHED USING A SINGLE 6" x 24" DUCT WITH THREE (3) DIVIDERS. THE DIVIDERS MUST BE CAPABLE OF SUPPORTING FOUR POUNDS PER LINEAR FOOT. AT THE DIRECTION OF THE HMSA INSTALLER, THE ELECTRICAL CONTRACTOR IS RESPONSIBLE FOR CUTTING OUT DIVIDERS OR DUCTS FOR ALL CABLE TRANSITION AREAS. ELECTRICAL CONTRACTOR SHALL ALSO PROVIDE GROMMET MATERIAL FOR ALL OPENINGS CUT IN WIREWAY.

4) THE WIREWAY MUST HAVE A REMOVABLE COVER. THE DIVIDERS MUST MAKE CONTACT WITH THE COVER TO FORM RF TIGHT COMPARTMENTS. **NOTE: SCREWS USED TO SECURE COVER MUST BE AS SHORT AS POSSIBLE AND SELF TAPPING SCREWS ARE NOT ALLOWED. CAUTION MUST BE USED WHEN SECURING COVERS TO ENSURE SCREWS DO NOT PENETRATE CABLES, WATER LINES OR HELIUM LINES.**

5) ALL WIREWAYS MUST BE BONDED TO THE RF SHIELD. A FLAT GROUND STRAP (MIN. 1") TO THE HMSA FILTER PANEL MUST ALSO BE PROVIDED.

6) AN ON-FLOOR OR IN-FLOOR WIREWAY WITH REMOVABLE COVER TO THE REAR OF THE GANTRY IS REQUIRED FOR SYSTEM INTERCONNECT CABLES.

7) A WIREWAY WITH A REMOVABLE COVER AND ONE (1) DIVIDER (MIN. 3 1/2" X 6") IS REQUIRED FROM THE EQUIPMENT ROOM WIREWAY TO THE OPERATOR WORKSTATION LOCATION (REFER TO SITE SPECIFIC DRAWING FOR EXACT CONFIGURATION). MOUNTING HEIGHT MUST BE BETWEEN 3 1/2" A/FF (MIN.) AND 24" A/FF (MAX.). FOR SITES WHERE THE EQUIPMENT ROOM IS REMOTE FROM THE CONTROL ROOM, A 4" CONDUIT WITH MINIMUM 3'-0" RADIUS BENDS MAY BE UTILIZED. THE CONDUIT IS RUN FROM THE EQUIPMENT ROOM WIREWAY AND MUST TERMINATE IN A 8" X 8" X 6"d (MINIMUM, LARGER AS REQ'D BY CODE) JUNCTION BOX AT THE OPERATOR WORKSTATION LOCATION. THE JUNCTION BOX MOUNTING HEIGHT IS AS SPECIFIED ABOVE FOR WIREWAY. MAXIMUM CABLE LENGTH AVAILABLE FOR A CONDUIT RUN IS 39' BETWEEN THE REAR OF THE RFIP CABINET AND THE OPERATOR WORKSTATION LOCATION. A FISH LINE MUST BE PROVIDED BY THE ELECTRICAL CONTRACTOR IF CONDUIT IS USED.

8) **THE ROUGH OPENING FOR THE FILTER PANEL IS BASED ON THE TOP OF THE WIREWAY BEING AT 24" A/FF** (SEE PG. 17 OF 27). DIFFERENCES BETWEEN WIREWAY MANUFACTURERS MAY EFFECT ACTUAL HEIGHT. AFTER SELECTING AND DESIGNING WIREWAY BASED ON CUSTOMER'S SITE SPECIFIC HMSA DRAWING, CONFIRM AND ADJUST FILTER PANEL ROUGH OPENING HEIGHT ABOVE FLOOR AS REQUIRED. COORDINATE ROUGH OPENING LOCATION WITH RF VENDOR.

9) A COMPUTER FLOOR MAY BE UTILIZED IN THE EQUIPMENT ROOM IN LIEU OF WIREWAYS. IN SOME INSTANCES, A COMPUTER FLOOR MAY BE REQUIRED DUE TO INTERCONNECTING CABLE LIMITATIONS (SEE CUSTOMER'S SITE SPECIFIC HMSA DRAWING). IF A COMPUTER FLOOR IS USED, A MINIMUM CLEAR HEIGHT OF 8" BELOW THE FLOOR IS REQUIRED. ADDITIONALLY, IT IS THE CUSTOMER'S/CONTRACTOR'S RESPONSIBILITY TO PROVIDE THE NECESSARY KNOCKOUTS (WITH PROTECTIVE GROMMET MATERIAL) AT ALL EQUIPMENT LOCATIONS, AS DIRECTED BY THE HMSA INSTALLER. THE CONTRACTOR, OR HIS REPRESENTATIVE MUST BE AVAILABLE DURING THE FIRST WEEK OF SYSTEM INSTALLATION.

10) ALL WIREWAYS, JUNCTION BOXES, CONDUITS, AND COMPUTER FLOOR MUST BE IN PLACE AND COMPLETE PRIOR TO DELIVERY OF THE SYSTEM.

11) A 3" X 6" OVERHEAD CABLE TRAY (WALKER WIREMOLD SPMA-A-6-3S OR EQ.) IS REQUIRED INSIDE THE SCAN ROOM, SUSPENDED 6" OR MORE BELOW THE RF CEILING. 3 1/ 2" X 6" WIREWAY RUNS FROM THE MCU PANEL, UP THE WALL TO THE CABLE TRAY ABOVE THE CEILING, WHICH TERMINATES ABOVE THE GANTRY BEHIND THE CRYOGEN VENT CONNECTION. THIS OVERHEAD CABLE TRAY MUST FOLLOW THE PATH INDICATED ON THE SITE SPECIFIC LAYOUT TO PREVENT THE MAGNETIC FIELD FROM CAUSING INTERFERENCE. TWO 1 3/4" WAVEGUIDES FOR THE HELIUM LINES ARE ALSO REQUIRED FROM THE EQUIPMENT ROOM TO THE OVERHEAD CABLE TRAY AT THE HEIGHT OF ITS HORIZONTAL RUN TO THE GANTRY. IF SCAN ROOM HAS A HARD (DRYWALL) CEILING RATHER THAN DROP CEILING, A CHANGE TO THE OVERHEAD TRAY SPECIFICATION MAY BE REQUIRED. CONSULT WITH SITE PLANNING DEPARTMENT.

12) THE WIREWAY FOR CUSTOMER SITES WILL VARY FROM THAT SHOWN ON THESE PAGES. REFER TO THE SITE SPECIFIC HMSA OASIS MARK II DRAWING FOR FURTHER CLARIFICATION AND EXACT REQUIREMENTS. REFER TO THE ELECTRICAL SECTION OF THESE STANDARD DETAILS FOR THE OASIS MARK II A.C. POWER WIRING SPECIFICATIONS.

13) THE CONTRACTOR IS RESPONSIBLE FOR ENSURING THAT ALL WORK CONFORMS TO APPLICABLE BUILDING CODES.

14) REFER TO HMSA DRAWING FOR SITE SPECIFIC WIREWAY LAYOUT.

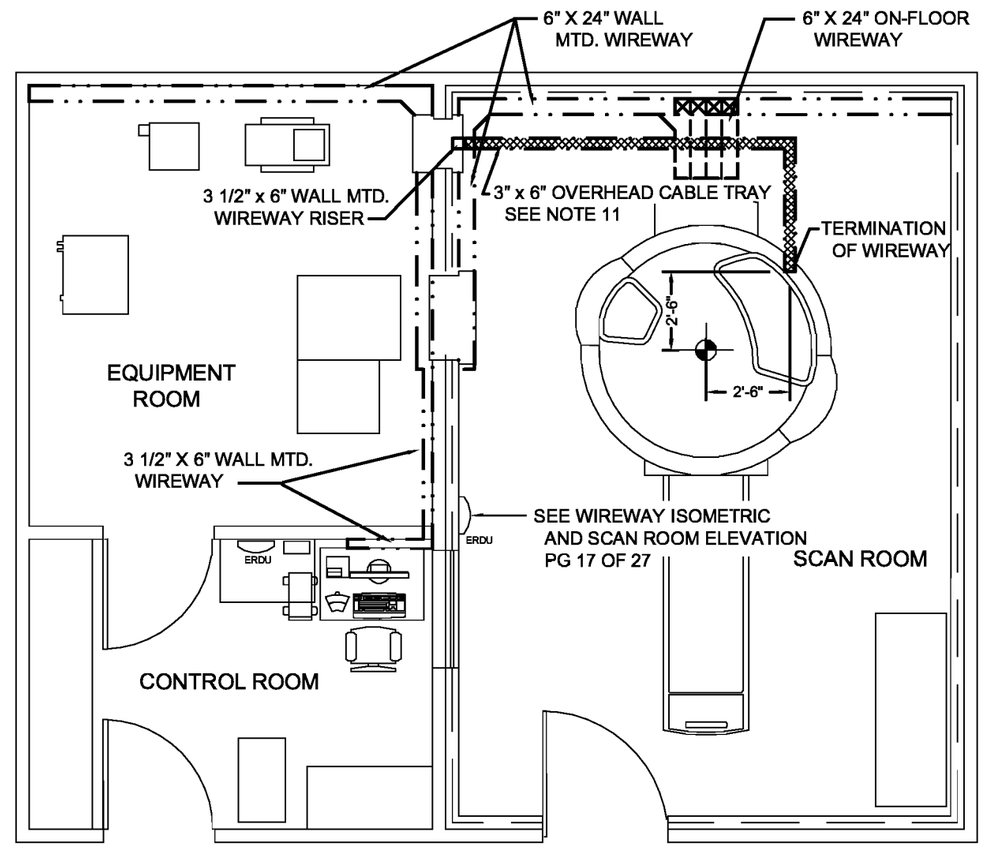

WIREWAY PLAN

NOT TO SCALE

HITACHI MEDICAL SYSTEMS AMERICA 1959 SUMMIT COMMERCE PARK TWINSBURG, OH 44087-2371 (800) 800-3106 WWW.HITACHIMED.COM	
WIREWAYS	
DATE: 04/30/2012	REVISION: 05/18/2012
OASIS MARK II STANDARD DETAILS	PAGE 16 OF 27

WIREWAYS (CONT)

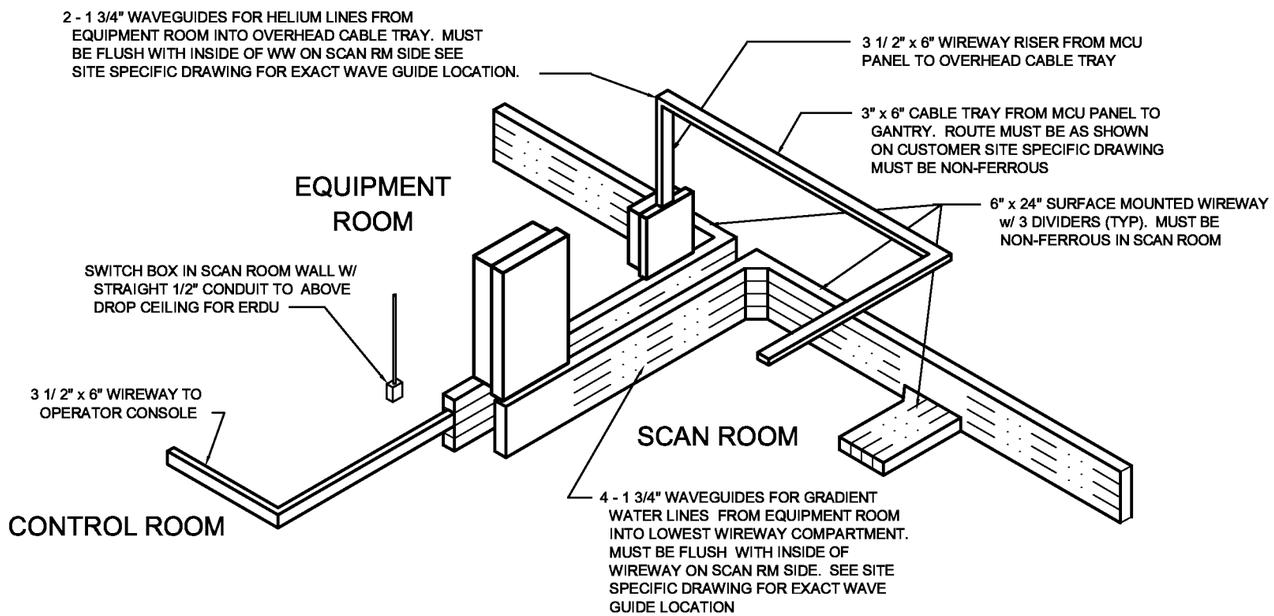

WIREWAY ISOMETRIC

FILTER PANEL NOTES

1) THE FILTER PANEL SHOULD BE SURFACE MOUNTED ON THE SCAN ROOM FINISHED WALL. THIS ASSURES THE CABLES WILL DROP CLEANLY INTO THE WIREWAY.

2) THE FILTER PANEL SHOULD BE MOUNTED SO THAT AN RF TIGHT SEAL IS PROVIDED AROUND THE PERIMETER . THE RF VENDOR MUST EXTEND THE RF SHIELD TO THE FINISHED SIDE OF THE SCAN WALL TO ENSURE A PROPER SEAL IS POSSIBLE.

3) THE FILTER PANEL SHOULD BE MOUNTED USING NON-CONDUCTIVE FRAMING TO MAINTAIN THE GROUNDING INTEGRITY.

4) IF METAL STUDS ARE USED, ROUGH OPENING (R.O.) MUST BE FRAMED IN WOOD ON BOTH SCAN AND EQUIPMENT ROOM SIDES.

5) FILTER PANEL ROUGH OPENING HEIGHT AFF SCAN ROOM FLOOR IS BASED ON TOP OF WIREWAY BEING 24" AT AFF. IF TOP OF WIREWAY IS DIFFERENT, ADJUST OPENING ACCORDINGLY. 3" GAP BETWEEN TOP OF WIREWAY AND FILTER PANEL ROUGH OPENING MUST BE MAINTAINED TO ENSURE FILTER PANEL COVER FITS PROPERLY.

6) FILTER PANELS MUST BE PLACED AS INDICATED ON THE SITE SPECIFIC DRAWING IN ORDER TO ENSURE PROPER FUNCTIONING OF THE SYSTEM

7) WIREWAYS MUST BE RUN AS SHOWN ON THE SITE SPECIFIC DRAWING IN ORDER TO ENSURE PROPER FUNCTIONING OF THE SYSTEM

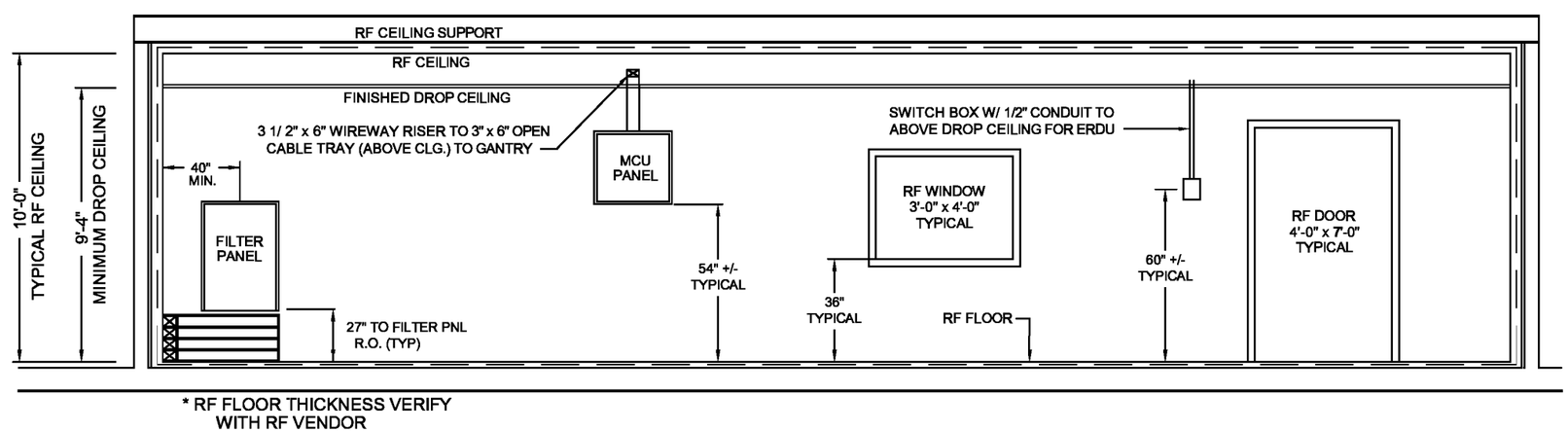

SCAN ROOM ELEVATION

HITACHI MEDICAL SYSTEMS AMERICA
1959 SUMMIT COMMERCE PARK TWINSBURG, OH 44087-2371
(800) 800-3106 WWW.HITACHIMED.COM

WIREWAYS (CONTINUED)

DATE: 04/30/2012 | REVISION: 05/18/2012

WIREWAYS (CONT)

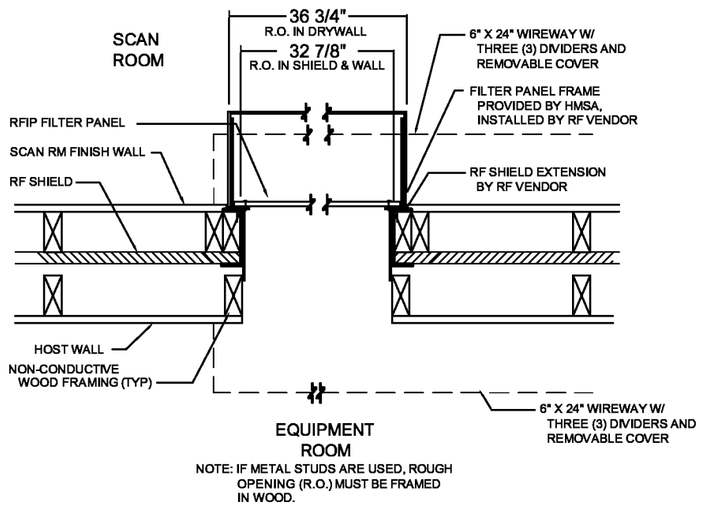

NOTE: IF METAL STUDS ARE USED, ROUGH OPENING (R.O.) MUST BE FRAMED IN WOOD.

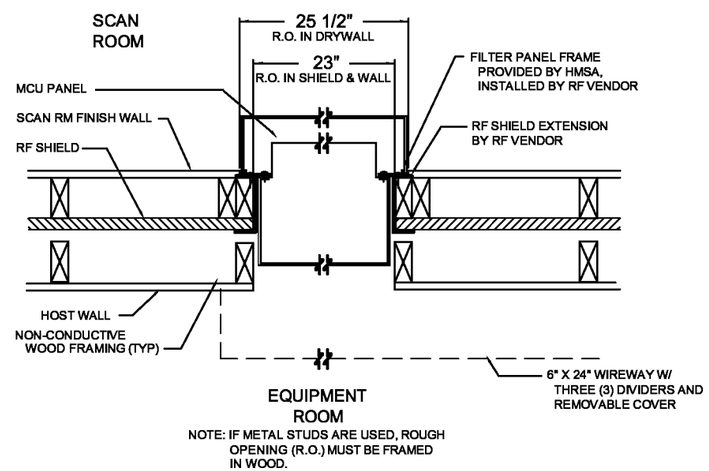

NOTE: IF METAL STUDS ARE USED, ROUGH OPENING (R.O.) MUST BE FRAMED IN WOOD.

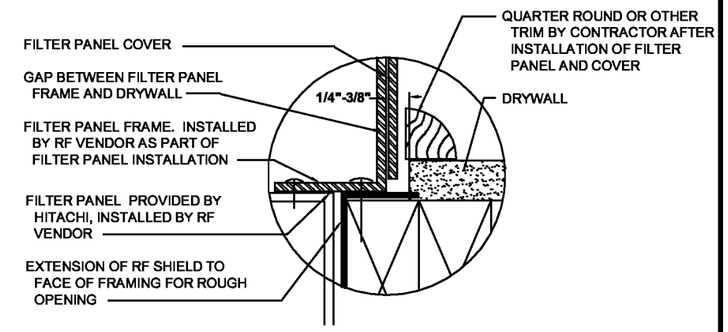

TYPICAL FINISH DETAIL AT BOTH PANEL OPENINGS

NOTE: - DRYWALL TO BE HELD BACK 1 7/8" ABOVE ROUGH OPENING AT TOP
- DO NOT INSTALL DRYWALL BELOW ROUGH OPENING BETWEEN BOTTOM OF ROUGH OPENING AND TOP OF WIREWAY

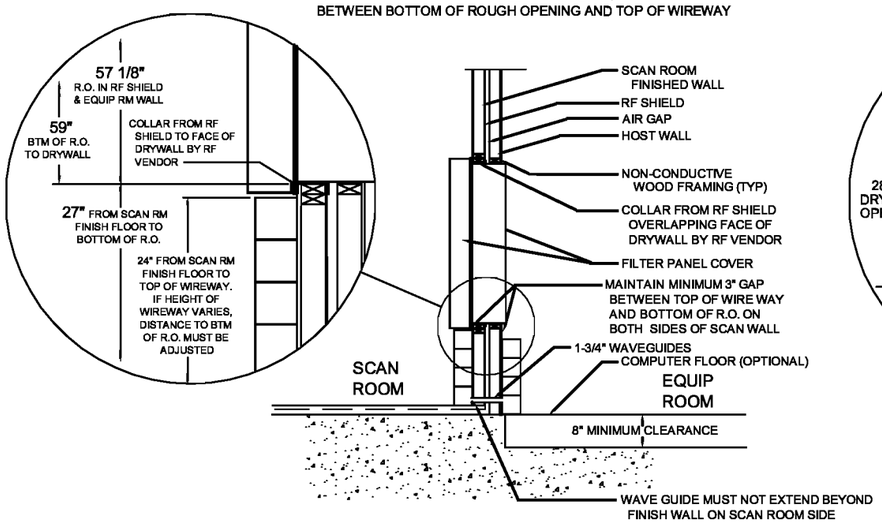

SECTION: MAIN FILTER PANEL @ SCAN / EQUIP ROOM WALL

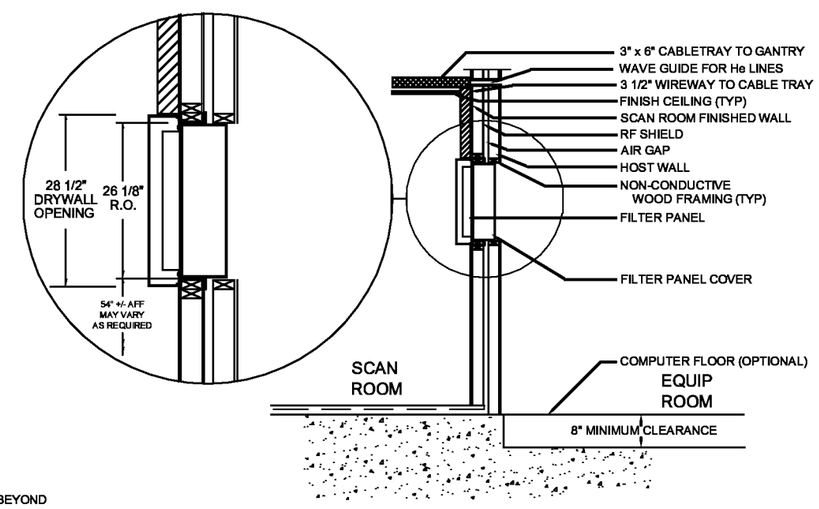

SECTION: MCU FILTER PANEL @ SCAN / EQUIP ROOM WALL

HITACHI MEDICAL SYSTEMS, AMERICA
1959 SUMMIT COMMERCE PARK TWINSBURG, OH 44087-2371
(800) 800-3106 WWW.HITACHIMED.COM

WIREWAYS (CONTINUED)

DATE: 04/30/2012 | REVISION: 05/18/2012

SAFETY

THE OASIS MARK II SYSTEM IS A HIGH FIELD SUPER CONDUCTIVE MAGNET THAT USES CRYOGENS FOR OPERATION. THE FOLLOWING MUST BE REVIEWED BY THE ARCHITECT OR ENGINEER, AND THE APPROPRIATE DESIGN SOLUTIONS INCORPORATED INTO THE SUITE.

1) A CRYOGEN VENT PIPE TO THE OUTSIDE MUST BE PROVIDED. THE VENT IS A MULTI-RESPONSIBILITY ITEM TO BE CONSTRUCTED AS FOLLOWS:
   a. HMSA WILL PROVIDE AND INSTALL THE CONNECTION TO THE MAGNET WITH FLEXIBLE VENT PIPE.
   b. THE RF VENDOR WILL PROVIDE A WAVE GUIDE (A PIPE WITH FLANGES) TO MAKE THE PENETRATION THROUGH THE RF ROOM FOR ATTACHMENT TO THE VENT.
   c. THE CONTRACTOR WILL CONNECT TO THE WAVE GUIDE USING NON-CONDUCTIVE FASTENERS AND TAKE THE VENT TO THE OUTSIDE.
   d. REFER TO THE SIZING CALCULATIONS ON PAGES 20 AND 21 FOR SIZE REQUIREMENTS.
2) FILLING THE OASIS MARK II WITH CRYOGEN (LIQUID HELIUM) IS ACCOMPLISHED USING "DEWARS" DELIVERED TO THE SITE. THESE DEWARS, BOTH FULL AND EMPTY, PRESENT A SAFETY CONCERN WHILE ON SITE. THE AMOUNT OF TIME ON SITE WILL VARY WITH LOCATION AND THE CUSTOMER MUST IDENTIFY A SECURE AND SAFE CRYOGEN STORAGE AREA. THIS MUST BE ADDRESSED DURING THE PLANNING STAGES OF THE PROJECT. A CLEAR AND LEVEL DELIVERY ROUTE (3'-6"w X 7'h) FROM THE STORAGE AREA TO THE SCAN ROOM MUST BE PROVIDED.
3) FOR PROTECTION OF ALL OCCUPANTS AND IN ACCORDANCE WITH OSHA REGULATIONS, HMSA REQUIRES AN EMERGENCY EXHAUST FAN IN THE SCAN ROOM. THE DUCT MUST EXTEND TO THE FINISHED CEILING. USE OF A CEILING PLENUM IS NOT ACCEPTABLE. THIS FAN SHALL BE CONTROLLED BY A MANUAL SWITCH LOCATED OUTSIDE OF THE SCAN ROOM. AN AIR INLET MUST ALSO BE INSTALLED IN THE RF SHIELD TO MAINTAIN A BALANCED ROOM PRESSURE WHEN THE FAN IS OPERATING AND WHEN THE SCAN ROOM DOOR IS OPENED OR CLOSED.
4) HELIUM IS CONSIDERED A SIMPLE ASPHYXIANT BY OSHA. IN ORDER TO ENSURE A FACILITY'S COMPLIANCE WITH OSHA REGULATIONS, HMSA HIGHLY RECOMMENDS THAT AN OXYGEN MONITOR CAPABLE OF AUTOMATICALLY OPERATING THE EXHAUST FAN BE INSTALLED IN ADDITION TO THE MANUAL SWITCH. IF AN OXYGEN MONITOR IS INSTALLED, THE CONTRACTOR WOULD BE RESPONSIBLE FOR SUPPLYING AND INSTALLING ALL OF ITS COMPONENTS. THE OXYGEN MONITOR SHOULD HAVE A BATTERY BACK-UP. THE CONTRACTOR MUST WORK WITH THE RF VENDOR TO COORDINATE THE PROPER RF ROOM PENETRATIONS.
5) **THE ONLY APPROVED OXYGEN MONITORS ARE A TELEDYNE 3350 OR MSA TOXGARD II.** THE OXYGEN MONITOR REFLECTED IN THESE PLANS IS A TELEDYNE 3350. THIS UNIT PROVIDES AN AUDIBLE ALARM AND TWO (2) CONTACTS FOR INTERCONNECT. ONE CONTACT WILL BE USED TO ACTIVATE THE EMERGENCY EXHAUST FAN. THE SECOND CAN BE USED TO ACTIVATE OTHER ALARMS TO ENSURE APPROPRIATE PERSONNEL ARE NOTIFIED IF A LOW OXYGEN ATMOSPHERE EXISTS. ONLY THE SENSOR PORTION OF THE OXYGEN MONITOR MAY BE MOUNTED IN THE SCAN ROOM. THE CONTROL PORTION OF THE OXYGEN MONITOR MUST BE MOUNTED IN THE CONTROL ROOM OR OTHER SPACE. CHECK TOTAL LENGTH OF CABLE NEEDED BEFORE ORDERING UNIT.
6) THE EMERGENCY STOP/QUENCH BUTTONS (ERDU) ARE INSTALLED AS PART OF THE OASIS MARK II SYSTEM. ONE IS LOCATED IN THE CONTROL ROOM, THE OTHER IN THE SCAN ROOM (REFER TO THE SITE SPECIFIC DRAWING FOR EXACT LOCATION). ACTIVATION OF EITHER SWITCH WILL RESULT IN A CRYOGEN RELEASE (VIA THE CRYOGEN VENT PIPE) DROPPING THE MAGNETIC FIELD TO .2 GAUSS IN UNDER 60 SECONDS. IF A CRYOGEN RELEASE OCCURS, THE MAGNET CAN NOT BE BROUGHT BACK UP TO FIELD WITHOUT SERVICING AND REFILLING THE SYSTEM.
7) IF CODE REQUIRES A SPRINKLER SYSTEM, THE DESIGN MUST BE COORDINATED WITH THE RF VENDOR TO ENSURE THE INTEGRITY OF THE RF SHIELD IS NOT COMPROMISED.
8) GUIDELINES SUCH AS THOSE PUBLISHED BY HMSA, CONCERNING THE PROXIMITY OF FERROUS OBJECTS TO THE MAGNET SHOULD BE OBSERVED. THE MAGNET'S FIELD IS CAPABLE OF RAPIDLY ACCELERATING UNRESTRAINED FERROUS ITEMS. THE GREATER THE MASS OF AN ITEM, THE STRONGER THE ATTRACTION CLOSE TO THE MAGNET. HUMAN STRENGTH MAY BE INSUFFICIENT TO RESTRAIN LARGER OBJECTS SUCH AS OXYGEN BOTTLES, CRASH CARTS AND PATIENT GURNEYS. SUCH ITEMS WILL BE DRAWN INTO (OR ONTO) THE MAGNET, POTENTIALLY CAUSING SEVERE INJURY OR DEATH TO PEOPLE IN THE ROOM AND DAMAGE TO THE MRI SYSTEM. SUCH OBJECTS MUST NOT BE ALLOWED INTO THE SCAN ROOM. SPECIAL NON-FERROUS EQUIPMENT SHOULD BE OBTAINED AND IDENTIFIED AS SAFE FOR USE IN THE SCAN ROOM.
9) IT IS THE CUSTOMER'S RESPONSIBILITY TO DISCUSS WITH AND ORIENT THEIR CLINICAL / MAINTENANCE STAFFS AND LOCAL EMERGENCY PERSONNEL TO MAGNET SAFETY.

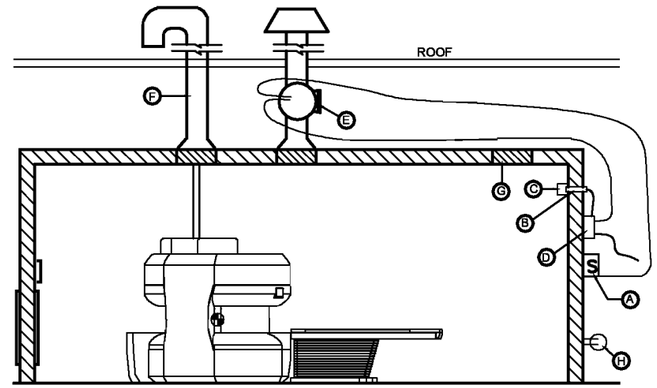

- (A) MANUAL FAN SWITCH (OUTSIDE SCAN ROOM DOOR)
- (B) RF FILTER FOR TELEDYNE 3350 (9 PIN, D CONNECTOR BY RF VENDOR OR SUPPLIER REQUIRED) OR ½" WAVE GUIDE FOR MSA TOXGARD II (BY RF VENDOR)
- (C) OXYGEN PROBE (IF INSTALLING OPTIONAL OXYGEN MONITOR): 7'-0" A/FF MINIMUM
- (D) OXYGEN MONITOR (OPTIONAL) - OPEN CONTACT FOR CUSTOMER USE
- (E) EMERGENCY EXHAUST FAN (1765 FT ³/MIN OR GREATER RECOMMENDED)
- (F) CRYOGEN VENT
- (G) AIR INLET
- (H) 120V, 20A, REQUIRED POWER
- (J) CONTACTOR/RELAY - 120V CONTACTOR WITH 120V COIL FOR PULL IN
- (K) MAIN PANEL

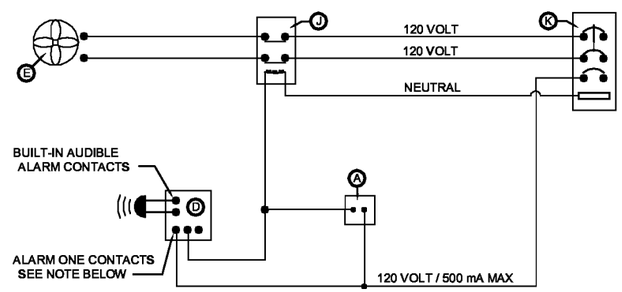

NOTE: WHEN LOW O_2 LEVEL OR A POWER FAIL OCCURS, ALARM ONE CONTACTS CLOSE.
ALARM 1 CONTACTS ARE ONLY RATED FOR 500mA @120V.
DO NOT RUN FULL PURGE FAN AMPERAGE THROUGH O2 SENSOR.
THE DIAGRAM ABOVE REFLECTS THE SCHEMATIC FOR THE TELEDYNE 3350 OXYGEN MONITOR. IT IS THE CONTRACTOR'S RESPONSIBILITY TO ENSURE THAT THE INSTALLATION OF THE OXYGEN MONITOR AND ALARM CIRCUIT CONFORMS WITH THE MANUFACTURER'S SPECIFICATION WHICH MAY VARY FROM WHAT IS SHOWN HERE.

Oasis Mark II Safety Information for Police, Fire, Emergency Service and Cleaning/Maintenance Personnel

All Magnetic Resonance Imaging (MRI) equipment operates using a large magnet. MRI magnets are very powerful and pose a serious danger for police, firefighters and EMS, as well as cleaning and maintenance personnel.

⚠ Warning

Obey the warning signs posted at the entry of the magnet scan room to avoid potential injury.

MRI systems pose a serious danger for personnel carrying metallic objects into the scan room. These objects can be **uncontrollably** attracted to the magnetic field. The force is stronger the closer the object is to the magnet and the larger the object.

⚠ Warning

Do not enter the scan room with metallic objects. Such objects become "missil es" that could cause serious injury.

Firefighters' equipment containing iron, such as axes, tools, oxygen bottles, fire extinguishers, ladders, and even smaller objects will be forcefully pulled into the magnet if they get too close.

Police firearms, handcuffs, and other metallic equipment may similarly become missiles by the attractive force of the MR magnet.

Large equipment, such as floor sweepers, waxers, vacuum cleaners, and pails will be drawn toward and into the magnet with such force that they cannot be held back nor removed from the magnet. Standard tools containing iron, such as hammers, pipe, screwdrivers, knives, pliers, nails, screws, and staples, will similarly be drawn into the magnet.

Electronic equipment not specifically made for use in a MRI environment may not work properly if brought close to the magnet. This includes pacemakers or other implanted devices.

⚠ Warning

Do not enter the magnet room if you have a pacemaker or other implanted device. The implanted device may fail and cause a serious injury.

This facility has a MRI system that uses a super-conducting magnet containing liquid helium. Because it is super-conducting, the magnet is **difficult to turn off**. In some cases, the liquid helium can escape the magnet. The helium turns to gas that can cause severe burns on skin contact.

⚠ Warning

Do not enter the scan room if alarms are activated. Escaping helium can displace the air in the room, creating an asphyx-iation hazard.

As an emergency or service person, you must become acquainted with the safety precautions and procedures associated with this equipment. See the facility administrator for more information.

Warning No Pacemakers	**Warning** No Metal Implants	**Warning** No Fire Extinguishers

Warning No Wheelchairs	**Warning** No Metallic Carts	**Warning** No Metallic Objects	**Warning** No Tools

HITACHI MEDICAL SYSTEMS AMERICA
1959 SUMMIT COMMERCE PARK TWINSBURG, OH 44087-2371
(800) 800-3106 WWW.HITACHIMED.COM

SAFETY

DATE: 04/30/2012 REVISION: 05/18/2012

QUENCH VENT SIZING

CALCULATING PIPE LENGTH AND DIAMETER :

THE CUSTOMERS ARCHITECT / ENGINEER IS RESPONSIBLE FOR UTILIZING THE FOLLOWING INFORMATION TO CALCULATE AND DESIGN THE CRYOGEN VENT LINE.

1) CALCULATE THE TOTAL APPARENT LENGTH OF THE QUENCH VENT. START THE CALCULATION ASSUMING A SMOOTH ELBOW (SEE TABLE 2) AND 4" ID PIPE.
   A. L1 + E1 + (L2 + L3) = LA (26'-0") + (3'-9" (FROM TABLE 2)) + (12'-0") = 41'-10"

2) APPARENT LENGTH (LA) = 41'-10". FROM TABLE 1, 6" ID PIPE IS REQUIRED.

3) PIPE SIZES MAY BE MIXED.
   A. THE PERCENTAGE OF ACTUAL TO ALLOWABLE LENGTH FOR EACH DIAMETER OF PIPE MUST BE CALCULATED.
   B. THE COMBINED TOTAL OF PERCENTAGES MUST NOT EXCEED 100%.
   C. WHEN CHANGING PIPE SIZES, A DIFFUSER IS REQUIRED (SEE DIFFUSER SIZING DIAGRAM THIS PAGE).
   D. THE LENGTH OF THE DIFFUSER IS INCLUDED IN THE LENGTH OF THE SMALLER DIAMETER PIPE TO WHICH IT IS ATTACHED.

4) FROM THE MAXIMUM PERMISSIBLE LENGTH CHART, THE ALLOWABLE LENGTH OF 4" PIPE IS 18'.
   A. THE 8' SECTION SHOWN IN THE ADJACENT DIAGRAM ACCOUNTS FOR 8/18 = 44.44% OF THIS ALLOWABLE LENGTH.

5) THE REMAINING LENGTH OF 6" PIPE MUST BE LESS THAN 55.56% OF THE ALLOWABLE 6" LENGTH.
   A. 77' X 55.56% (.5556) = 42'-9".

6) THE APPARENT LENGTH OF 6" PIPE IS:
   A. L1 + E1 + L2 =LA (26'-0") + (5'-8" (FROM TABLE 2)) + (4'-0") = 35'-7"
   B. THIS IS LESS THAN THE ALLOWED 42'-9" (55.56% OF 77') OF 6" PIPE SO THE VENT PIPE AS SHOWN IN THE DIAGRAM IS ACCEPTABLE.

7) THE TOTAL LENGTH OF THE VENT PIPE EXCEEDS 30'; THEREFORE A BELLOWS (EXPANSION JOINT) SECTION IS REQUIRED TO ALLOW FOR CONTRACTION AND MOVEMENT OF THE PIPE.
   A. THE MAXIMUM LENGTH OF A BELLOWS SECTION MUST BE LESS THAN 2% OF THE ALLOWABLE PIPE LENGTH.
   B. IN THE EXAMPLE ABOVE MAXIMUM LENGTH IS 8'-0" + 42'-9" = 50'-9"
   C. 50'-9" (609") X .02 = 12"

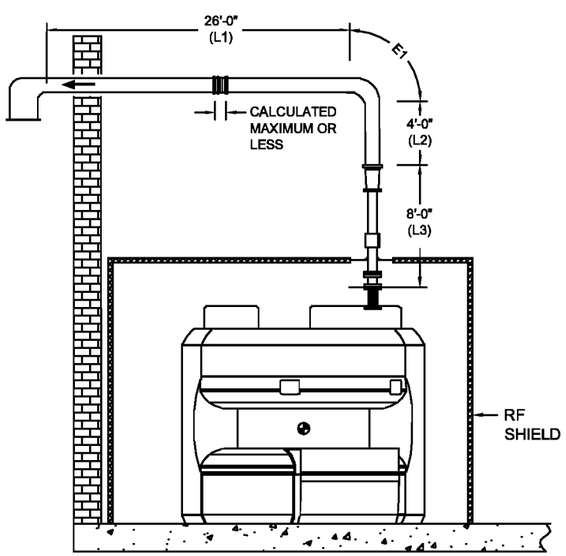

MAXIMUM PERMISSABLE VENT LENGTHS	
(a) SMOOTH PIPE	
DIAMETER OF PIPE	MAXIMUM LENGTH OF PIPE
INCHES	FEET
4	18
5	40
6	77
7	135
8	226
9	374
10	602
(b) FLEXIBLE CONVOLUTED TUBE	
DIAMETER OF PIPE	MAXIMUM LENGTH OF PIPE
INCHES	FEET
4	5
5	11
6	22
7	41
8	75

TABLE 1.
MAXIMUM PIPE LENGTHS

EFFECTIVE LENGTH OF BENDS (TOTAL FRICTION LOSS OF BEND)					
PIPE DIAMETER	EFFECTIVE LENGTH PER ELBOW				
INCHES	90° SMOOTH	90° SEGMENTED	45° SMOOTH	45° SEGMENTED	MITERED
4	3'-9"	6'-8"	2'-6"	4'-4"	22'-2"
5	4'-9"	8'-3"	3'-2"	5'-6"	27'-10"
6	5'-8"	9'-11"	3'-9"	6'-8"	33'-5"
7	6'-10"	11'-11"	4'-6"	7'-7""	39'-1"
8	8'-0"	13'-11"	5'-2"	9'-1"	44'-4"
9	8'-9"	15'-3"	5'-9"	9'-11"	50'-11"

TABLE 2.
EFFECTIVE LENGTH OF BENDS

NOTE: INTERPOLATE FOR VALUES BETWEEN O°- 45° AND 45°- 90°.

DATA ONLY TO BE USED FOR BENDS WHERE THE RADIUS TO DIAMETER RATIO IS IN THE RANGE OF 1.5 TO 5.0, EXCEPT FOR RIGHT ANGLE MITERED JOINTS.

VIBRATION DECOUPLING TUBE AND QUENCH VALVE 90° ELBOW (DELIVERED AS PARTS OF THE MAGNET) HAVE BEEN ACCOUNTED FOR IN THESE CALCULATIONS.

NOTE THAT A SECOND QUENCH VALVE ELBOW WOULD TAKE 17% OF THE MAXIMUM PERMISSABLE LENGTH

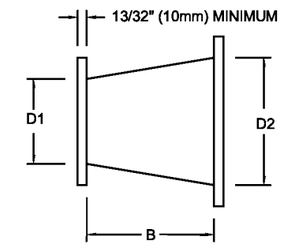

QUENCH PIPE DIFFUSER

A DIFFUSER IS USED WHENEVER AN INCREASE IN PIPE DIAMETER IS REQUIRED.
DESIGN CRITERIA: DISTANCE "B" MUST BE GREATER THAN 2.5 x (D2 - D1)

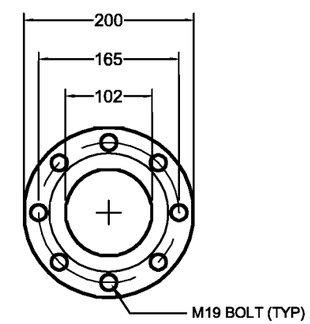

*DIMENSIONS SHOWN IN MILIMETERS

CRYOGEN VENT FLANGE

HITACHI MEDICAL SYSTEMS AMERICA
1959 SUMMIT COMMERCE PARK TWINSBURG, OH 44087-2371
(800) 800-3106 WWW.HITACHIMED.COM

CRYOGEN VENT SIZING

DATE: 04/30/2012 | REVISION:05/18/2012

CRYOGEN VENT NOTES

THE VENT PIPE IS CRITICAL TO THE SAFE OPERATION OF THE SYSTEM. HELIUM GAS, WHICH IS EXHAUSTED IN THE EVENT OF A QUENCH IS EXTREMELY COLD AND DISPLACES OXYGEN. THE POSSIBILITY OF ASPHYXIATION EXISTS IF IT IS NOT PROPERLY VENTED. CONSIDERATION MUST BE GIVEN NOT ONLY TO THE DESIGN OF THE VENT PIPE ITSELF, BUT ALSO THE LOCATION OF ITS END POINT. **THE VENT PIPE MUST BE DESIGNED BY THE CUSTOMERS ARCHITECT / ENGINEER** IN ACCORDANCE WITH THE INFORMATION PROVIDED IN THIS SECTION OF THE OASIS MARK II STANDARD DETAILS.

1) THE QUENCH VENT WAVEGUIDE MUST BE CONSTRUCTED OF NON-MAGNETIC STAINLESS STEEL ONLY. THE MINIMUM WALL THICKNESS FOR STRAIGHT TUBE IS 22 GAUGE (.0299"). ACCEPTABLE GRADES ARE: AISI 304, 309, 316 AND 321 OR THEIR EN EQUIVALENTS. NO OTHER MATERIALS ARE ALLOWED DUE TO EXTREME TEMPERATURES. FROM THE DIELECTRIC UNION TO THE EXTERIOR OF THE BUILDING, EITHER STAINLESS STEEL OR 6061-T6 ALUMINUM MAY BE USED FOR THE VENT PIPE.
2) DETERMINING THE ROUTING OF THE VENT TO THE OUTSIDE IS THE RESPONSIBILITY OF THE ARCHITECT/CONTRACTOR. THE LENGTH OF THE VENT RUN TO THE OUTSIDE WILL DICTATE ITS REQUIRED DIAMETER. REFER TO THE FORMULA FOR DETERMINING THE EFFECTIVE LENGTH OF THE VENT AND DIAMETER (PG 20 OF 27).
3) THE CRYOSTAT CONTAINS 1000 LITERS OF LIQUID HELIUM WHEN FILLED. IN THE EVENT OF A QUENCH, APPROXIMATELY 754 CUBIC METERS (26,625 FT³) OF HELIUM GAS WILL BE EXHAUSTED THROUGH THE VENT PIPE OVER A PERIOD OF 20-30 MINUTES. THE HELIUM GAS RELEASED IS AN ASPHYXIANT IN ADDITION TO BEING EXTREMELY COLD.
4) EXPANSION TO A LARGER DIAMETER PIPE REQUIRES THE USE OF A DIFFUSER (REFER TO PG 20 OF 27). PIPE DIAMETER MAY NOT BE REDUCED IN THE DOWNSTREAM DIRECTION.
5) THE VENT PIPE DESIGN CALCULATIONS ARE FORMULATED TO ALLOW A MAXIMUM INTERNAL PRESSURE OF 0.1 BAR ABOVE ATMOSPHERE, HOWEVER, THE MAXIMUM DESIGN PRESSURE NEEDS TO BE 0.45 BAR.
6) THERMAL CONTRACTION (APPROXIMATELY 1/16" PER FOOT FOR STAINLESS STEEL, GREATER FOR ALUMINUM) MAY OCCUR. A BELLOW MUST BE FITTED AT A MINIMUM OF EVERY 30' TO ALLOW FOR THIS. THE TOTAL LENGTH OF ALL BELLOWS MAY NOT EXCEED 2% OF THE MAXIMUM ALLOWED PIPE LENGTH. THE MATERIAL USED TO SUSPEND THE PIPE MUST BE FLEXIBLE ENOUGH TO ACCOMMODATE THIS MOVEMENT. ADDITIONALLY, THROUGH WALL PENETRATIONS SHOULD NOT BE HARD ATTACHED TO THE WALL.
7) ALL BENDS MUST HAVE A CENTERLINE RADIUS TO INTERNAL DIAMETER RATIO BETWEEN 1.5 AND 5.0. ALL BENDS MUST BE SMOOTH WALLED. IF A SMOOTH WALL BEND IS NOT POSSIBLE, ELBOWS MAY BE FABRICATED FROM STRAIGHT PIPE PROVIDED THAT A MINIMUM OF 4 SECTIONS ARE USED FOR A 90 DEGREE ELBOW.
8) JOINTS MAY ONLY BE MADE BY WELDING OR FLANGES. FLANGES MUST BE A MINIMUM OF 13/32" (10MM) THICK AND SHALL BE CONTINUOUSLY WELDED ON THE INSIDE WITH A MINIMUM 50% STITCH WELD ON THE OUTSIDE. ROTARY FLANGES ARE PERMITTED. GASKET MATERIAL MUST BE UHMW-PE, PTFE OR FIBER.
9) THE VENT PIPE IS TO BE INSULATED ITS FULL INDOOR LENGTH. MINERAL FIBER INSULATION NOT LESS THAN 1" THICK AND COVERED WITH A VAPOR BARRIER IS RECOMMENDED. IF INSULATION IS USED ON OUTDOOR PORTIONS OF THE VENT PIPE (RECOMMENDED) IT MUST BE WEATHER-PROOF. WITHIN THE SCAN ROOM, AN ADDITIONAL 1" THICK LAYER OF CLOSED CELL FOAM INSULATION (ARMAFLEX CLASS "O" OR EQUAL) IS DESIRED.
10) THE TERMINATION OF THE VENT MUST BE DESIGNED TO PREVENT THE INTRUSION OF WEATHER (RAIN, SNOW OR DRIFTING SNOW), ANIMALS OR OTHER FOREIGN OBJECTS. IF MESH IS USED IT SHOULD BE 1/2" WITH 3/64" ROUND WIRE. THE **GROSS AREA** COVERED BY MESH MUST BE AT LEAST 2.5 TIMES THE CROSS SECTION OF THE VENT PIPE. FLAT SHEET STOCK WITH 3/8" ROUND OR SQUARE HOLES MAY ALSO BE USE AS MESH, HOWEVER DUE TO A GREATER FLOW RESISTANCE, THE **TOTAL FREE FLOW AREA** OF MESH MUST BE 2.5 TIMES THE CROSS SECTION OF THE VENT.
11) A SIDE WALL CRYOGEN VENT OUTLET MUST BE MOUNTED NO LESS THAN 16'-8" ABOVE A SIDEWALK. ADDITIONALLY, OPERABLE WINDOWS OR AIR INLETS MUST BE RESTRICTED FROM AN AREA 9'-8" TO THE SIDES OR BELOW AND 19'-3" ABOVE A SIDE WALL EXIT OF THE VENT PIPE. WHERE A VERTICAL EXHAUST EXITS THROUGH A FLAT ROOF, ACCESS SHOULD BE RESTRICTED OR WARNING SIGNS POSTED IN A 9'-8" RADIUS AROUND THE VENT. THE VENT PIPE INTERNAL TO THE BUILDING SHOULD ALSO BE MARKED WITH WARNINGS STATING ITS FUNCTION. IT IS THE ARCHITECT/CONTRACTOR'S RESPONSIBILITY TO ENSURE THAT THE OUTLET AND WARNING SIGNS MEET ALL APPLICABLE CODES.

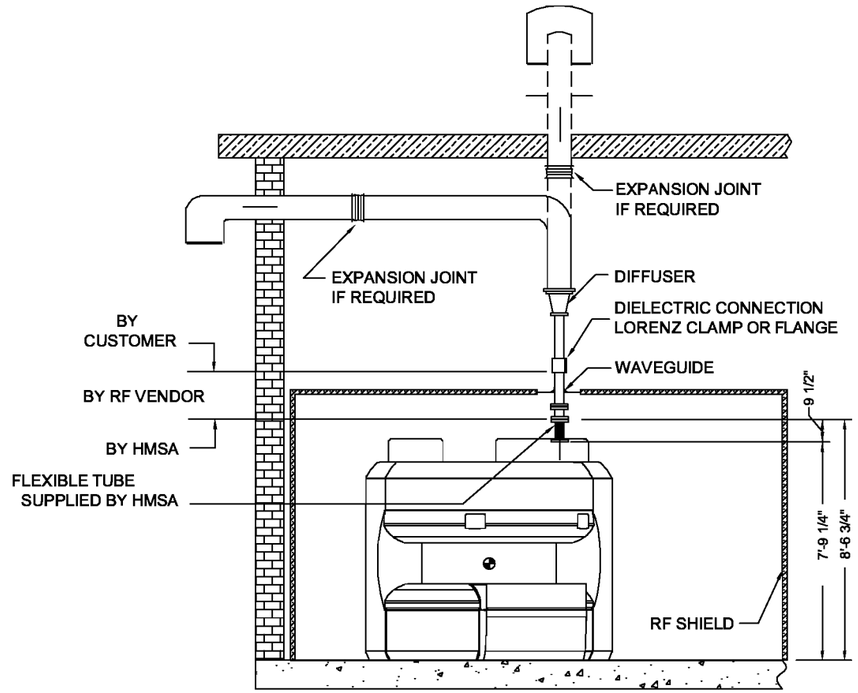

CRYOGEN VENT CONNECTION DIAGRAM
NOT TO SCALE

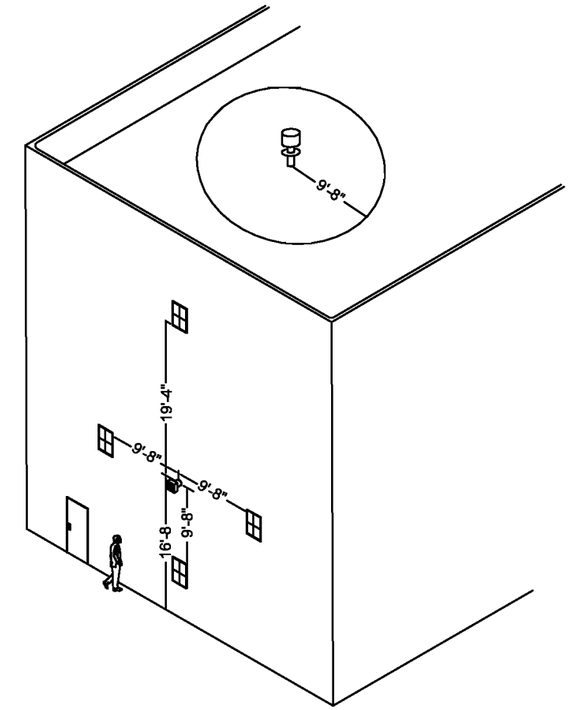

RESTRICTED AREA SURROUNDING CRYOGEN VENT
NOT TO SCALE

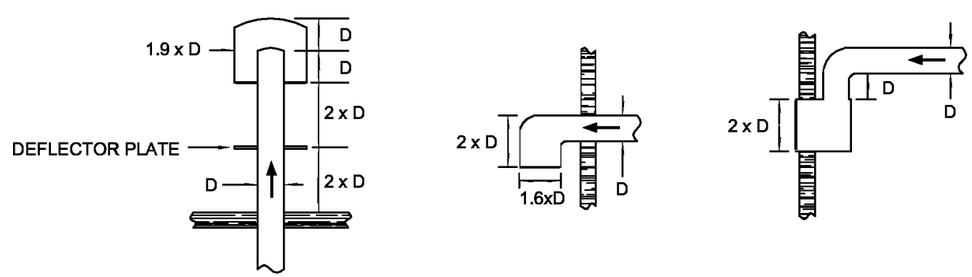

TYPICAL CRYOGEN VENT OUTLETS

NOTE: -ULTRA COLD GAS FROM THE VENT MAY CAUSE THERMAL SHOCK AND DAMAGE TO BUILDING MATERIALS CLOSE TO THE EXIT
-EPDM OR OTHER MEMBRANE ROOFING MATERIALS SHOULD BE PROTECTED FROM VENTED GAS
-DIMENSIONS SHOWN ARE MINIMUMS

HITACHI MEDICAL SYSTEMS AMERICA
1959 SUMMIT COMMERCE PARK TWINSBURG, OH 44087-2371
(800) 800-3106 WWW.HITACHIMED.COM

CRYOGEN VENT NOTES

DATE: 04/30/2012	REVISION: 05/18/2012
OASIS MARK II STANDARD DETAILS	PAGE 21 OF 27

MAGNET PROXIMITY

DEVICES AFFECTED BY MAGNETIC FIELDS	
1 GAUSS	NUCLEAR CAMERAS, PET SCANNER, COLOR MONITORS, IMAGE INTENSIFIER, LINEAR ACCELERATOR, ULTRASOUND, CT SCANNER, MRI SCANNER, ELECTRON MICROSCOPE
3 GAUSS	MULTI FORMAT CAMERA (LASER IMAGER), COMPUTER HARD DRIVES, ELECTRONIC MEMORY CARD, FERROUS CARD, WATCH
5 GAUSS	PACE MAKER, CREDIT CARDS, ANALOG CELLULAR PHONE, DEFIBRILLATORS, IMPLANTS

REQUIRED DISTANCE FROM ISOCENTER TO ITEMS THAT MAY AFFECT MAGNET	
10'	LARGE FERROUS OBJECTS OVER 400 LBS., MAJOR STRUCTURAL STEEL, FERROUS CART
20'	AUTOMOBILES, SMALL TRUCKS, HVAC AIR HANDLERS, HVAC CONDENSERS, WATER CHILLERS, ELECTRICAL SUB-PANELS OVER 50 AMP, LARGE MOTORS (GAS AND ELECTRIC)
40'	LARGE TRUCKS AND BUSES, ELEVATORS, ESCALATORS, LARGE ELECTRICAL TRANSFORMERS, LARGE ELECTRICAL PANELS (OVER 200 AMP), MAIN ELECTRICAL FEEDER LINES (INCLUDING UNDERGROUND)
200'	HIGH TENSION ELECTRICAL LINES, RAILROAD TRACKS, HELICOPTER PAD

NOTE:
THE ABOVE CHARTS ARE INTENDED SOLELY AS A GUIDELINE AND NOT AS AN ALL-INCLUSIVE CHECKLIST. IT MAY BE POSSIBLE TO DAMPEN THE EFFECT OF SOME OF THE DC TYPE INFLUENCES (CAUSED BY MOVING OBJECTS) THROUGH THE USE OF MAGNETIC SHIELDING. THE EFFECT OF MAGNETIC SHIELDING AGAINST A.C. TYPE INTERFERENCE (ELECTRICAL POWER) IS SIGNIFICANTLY LESS THAN FOR D.C. TYPES. CONSULT WITH THE HMSA SITE PLANNER FOR FURTHER INFORMATION.

MAGNET PLACEMENT

THE AREA COVERED BY THE MAGNET'S FRINGE FIELDS IS OF PRIME CONCERN WHEN SELECTING AN MRI SITE. CONSIDERATION MUST BE GIVEN TO THE FOLLOWING CONCERNS:

1) USE OF THE SURROUNDING AREAS, INCLUDING SPACE ABOVE AND ADJACENT TO THE MAGNET. IT MAY BE POSSIBLE TO REDUCE THE INFLUENCE OF THE MAGNETIC FIELD ON ADJACENT SPACES WITH THE USE OF MAGNETIC SHIELDING. CONSULT WITH THE SITE PLANNING SPECIALIST FOR FURTHER INFORMATION.
2) TYPE OF CONSTRUCTION MATERIALS USED IN THE EXISTING STRUCTURES, PARTICULARLY COLUMNS, BEAMS, JOISTS, REINFORCEMENT STEEL, AND CAST IRON PIPES.
3) LOCATION OF MECHANICAL EQUIPMENT AND OTHER MEDICAL MODALITIES.
4) LOCATION OF ELEVATORS, LOADING DOCKS, PARKING LOTS, DRIVEWAYS, AND ELECTRICAL SERVICES (INCLUDING BURIED UTILITIES).
5) A MAGNETIC FLUCTUATION TEST MUST BE PERFORMED AT ALL SITES TO ASSIST IN IDENTIFYING POSSIBLE SOURCES OF INTERFERENCE. A SITE CANNOT RECEIVE FINAL APPROVAL BY HMSA SITE PLANNING WITHOUT THIS TEST.

MAGNETIC SHIELDING

RF SHIELDING (PG 8 OF 27) WHICH ELIMINATES RADIO SIGNALS FROM REACHING THE SYSTEM IS DIFFERENT THAN MAGNETIC SHIELDING AND IS REQUIRED FOR AN OASIS MARK II MRI SYSTEM WHETHER MAGNETIC SHIELDING IS USED OR NOT. MAGNETIC SHIELDING PROVIDES A MEANS OF LIMITING THE DISTANCE THE GAUSS FIELDS EXTEND OUT FROM AN OASIS MARK II SYSTEM'S ISO-CENTER OR DAMPING THE EFFECTS THE SURROUNDING ENVIRONMENT (SEE CHART THIS PAGE) MAY HAVE ON IT.

MAGNETIC SHIELDING IS CONSTRUCTED OF FERROUS METAL AND IS TYPICALLY MOUNTED TO THE EXTERIOR OF THE RF SHIELD. IT IS NORMALLY SUPPLIED AND INSTALLED BY THE RF SHIELDING VENDOR AT THE TIME THE RF SHIELD IS INSTALLED. LIKE ANY OTHER FERROUS OBJECT, ITS MAGNETIC PROPERTIES AFFECT THE SHIM OF THE MAGNET (SEE MAGNETIC SHIMMING THIS PAGE)

MAGNET SHIMMING

ONCE THE MRI SYSTEM IS INSTALLED, THE MAGNETIC FIELD IS SHIMMED TO COUNTERACT THE EFFECT OF ANY PERMANENT FERROMAGNETIC OBJECTS AROUND IT. THE WEIGHT OF THE OBJECT AND ITS DISTANCE FROM THE ISO-CENTER OF THE GANTRY DETERMINE THE INFLUENCE IT WILL HAVE ON THE MAGNETIC FIELDS. IN ORDER TO PROPERLY EVALUATE A SITE AND DETERMINE THE AFFECT OF SUCH OBJECTS ON THE ABILITY TO SHIM THE MAGNET, THE FOLLOWING INFORMATION MUST BE PROVIDED:

1) THE SIZE (I.E.: W24 X 76) AND LOCATION OF STRUCTURAL STEEL COLUMNS AND BEAMS ADJACENT TO THE SCAN ROOM. THIS INFORMATION IS NORMALLY FOUND ON THE STRUCTURAL DRAWINGS FOR A BUILDING.
2) THE THICKNESS AND LOCATION OF MAGNETIC SHIELDING THAT WILL REMAIN IN PLACE IF THE OASIS MARK II IS TO BE INSTALLED IN AN EXISTING MRI SCAN ROOM. THIS INFORMATION CAN BE NORMALLY BE FOUND ON THE RF SHIELD DRAWINGS OR BY CONTACTING THE RF SHIELDING VENDOR WITH THE SERIAL NUMBER OF THE ROOM.
3) THE WEIGHT OF ANY OTHER LARGE PERMANENT FERROUS OBJECTS (I.E. WALK-IN SAFE) ADJACENT TO THE SCAN ROOM.

MAGNET AFFECT ON LOOSE OBJECTS

ATTRACTION OF LOOSE FERROMAGNETIC OBJECTS IS OF CONCERN WITHIN THE MRI SCAN ROOM. THE MAGNET'S FIELD STRENGTH IS CAPABLE OF ACCELERATING UNRESTRAINED FERROUS OBJECTS. THE GREATER THE MASS OF THE OBJECT AND THE CLOSER IT GETS TO THE MAGNET, THE STRONGER THE ATTRACTION. NEAR THE MAGNET, HUMAN STRENGTH MAY NOT BE SUFFICIENT TO RESTRAIN FERROUS OBJECTS SUCH AS OXYGEN TANKS AND CRASH CARTS. SUCH OBJECTS WILL BE DRAWN INTO (OR ONTO) THE MAGNET, POTENTIALLY CAUSING INJURY OR DEATH TO PERSONS AND DAMAGE TO THE MRI SYSTEM. SUCH OBJECTS MUST NOT BE ALLOWED IN THE SCAN ROOM. SPECIAL NONFERROUS EQUIPMENT SHOULD BE OBTAINED AND IDENTIFIED FOR USE IN THE SCAN ROOM.

ACCESS RESTRICTION

FDA REQUIREMENT RESTRICTS PUBLIC ACCESS WITHIN THE 5 GAUSS FIELD UNLESS INDIVIDUALS HAVE BEEN PROPERLY SCREENED.

RIGGING AND DELIVERY

DURING THE INITIAL PLANNING OF THE OASIS MARK II SUITE, A SYSTEM DELIVERY PATH MUST BE IDENTIFIED. THE DESIGN TEAM SHOULD REVIEW THE INFORMATION PRESENTED ON THIS PAGE TO ENSURE A STAGING AREA AND A CLEAR DELIVERY PATH IS AVAILABLE. WHILE THE MAGNET IS THE MAJOR CONCERN, CLEARANCES MUST ALSO BE ASSURED FOR THE DELIVERY OF ANCILLARY SYSTEM COMPONENTS, SERVICE / INSTALLATION TOOLS AND THE ONGOING REQUIREMENT OF HELIUM DEWARS. SITE PLANNING WILL ASSIST IN IDENTIFYING THE MOST APPROPRIATE DELIVERY PATH.

THE DELIVERY PROCESS IS AS FOLLOWS:

1. SITE PLANNING AND THE DESIGN TEAM WILL IDENTIFY A STAGING AREA AND A DELIVERY PATH.
2. AN INITIAL DELIVERY DATE WILL BE SCHEDULED USING INPUT FROM THE DESIGN TEAM. (CONSTRUCTION SCHEDULE)
3. TIMELY VISITS WILL BE MADE BY THE LOCAL HMSA FIELD SERVICE ENGINEER (FSE) CONFIRMING THE SITE PROGRESS.
4. THE CONTRACTOR AND FSE WILL REVIEW THE OASIS MARK II PRE-DELIVERY CHECKLIST AGAINST THE ACTUAL SITE STATUS. SITE PLANNING IS TO BE CONTACTED WITH ANY CONCERNS THAT MAY AFFECT THE DELIVERY.
5. FOURTEEN (14) DAYS PRIOR TO THE SCHEDULED DELIVERY, THE CUSTOMER WILL SUBMIT A COMPLETED CHECKLIST TO SITE PLANNING NOTING THE STATUS OF THE SITE.
   a. IF COMPLETION OF THE CHECKLIST REQUIREMENTS CANNOT BE GUARANTEED BY THE CUSTOMER, THE DELIVERY WILL BE RESCHEDULED.
   b. IF THE CUSTOMER CAN VERIFY THAT THE SITE IS ON SCHEDULE AND THAT ALL CHECKLIST REQUIREMENTS WILL BE COMPLETE, THE DELIVERY DATE WILL BE SET WITHIN 10 DAYS OF THE SUBMITTAL.
6. SITE PLANNING WILL CONFIRM ADMINISTRATIVE APPROVAL.
7. SITE PLANNING WILL CO-ORDINATE SCHEDULING OF THE SYSTEM DELIVERY WITH THE APPROPRIATE PARTIES, ADJUSTING THE DELIVERY DATE TO MEET EVERYONE'S SCHEDULE.
8. THE CUSTOMER CONFIRMS THE RIGGERS SCHEDULE AT THIS TIME.

RESPONSIBILITIES:

HMSA RESPONSIBILITIES:

1. ASSIST THE CUSTOMER / CONTRACTOR IN IDENTIFYING A DELIVERY STAGING AREA (TRUCK PARKING. CRATE UNPACKING).
2. ASSIST THE CUSTOMER / CONTRACTOR IN IDENTIFYING A DELIVERY PATH FROM THE STAGING AREA TO THE SUITE.
3. ASSIST THE CUSTOMER / CONTRACTOR IN LOCATING AN ADEQUATE / ACCESSIBLE STORAGE SPACE (600 SF)
4. COORDINATE THE DELIVERY DATE WITH THE CUSTOMER / CONTRACTOR AND APPROPRIATE PARTIES.
5. INSPECT AND APPROVE THE SITE PRIOR TO DELIVERY TO CONFIRM THE ADEQUATE ACCESS IS AVAILABLE.
6. INSTALL THE OASIS MARK II SYSTEM.

CUSTOMER / CONTRACTOR / RIGGERS RESPONSIBILITIES:

1. ARRANGE WITH HMSA FOR DELIVERY OF THE CHILLER SYSTEM PRIOR TO SYSTEM DELIVERY.
2. HAVE THE CHILLER SYSTEM INSTALLED AND TESTED PRIOR TO DELIVERY OF THE SYSTEM.
3. PROVIDE AN OBSTRUCTION FREE DELIVERY PATH MEETING THE DELIVERY REQUIREMENTS.
4. PROVIDE AN OBSTRUCTION FREE STAGING AREA.
5. HAVE A FACILITY REPRESENTATIVE AVAILABLE AT THE TIME OF DELIVERY TO SIGN SHIPPING DOCUMENTS.
6. SECURE INSURANCE COVERAGE FOR THE SYSTEM, EFFECTIVE UPON DELIVERY.
7. PROVIDE AN ADEQUATE / ACCESSIBLE STORAGE AREA WITHIN THE FACILITY, IF REQUIRED.
8. ARRANGE FOR THE DISPOSAL OF ALL PACKING AND CRATING MATERIALS (40 YARD DUMPSTER REQUIRED, WILL ALSO REQUIRE BEING EMPTIED DURING THE FIRST DAY)
9. CONTRACT A RIGGER TRAINED IN HANDLING THE OASIS MARK II MAGNET TO PERFORM THE DELIVERY INCLUDING THE FOLLOWING.
10. TAKE THE NECESSARY PRECAUTIONS TO PROTECT THE FACILITY AND EQUIPMENT.
11. IDENTIFY AND PROVIDE NECESSARY EQUIPMENT FOR THE DELIVERY (I.E. CRANE, FORKLIFT, MANPOWER, TOOLS)
12. UNLOAD AND UNCRATE ALL OF THE EQUIPMENT AND PLACE IT IN THE SUITE.
13. SET MAGNET AND ANCILLARY EQUIPMENT PER THE HMSA SITE PLAN.

NOTE: SITE PLANNING WILL NOT CONFIRM A SCHEDULED DELIVERY DATE WITHOUT:

1. **A SUBMITTED PRE-DELIVERY CHECKLIST**
2. **ADMINISTRATIVE APPROVAL**

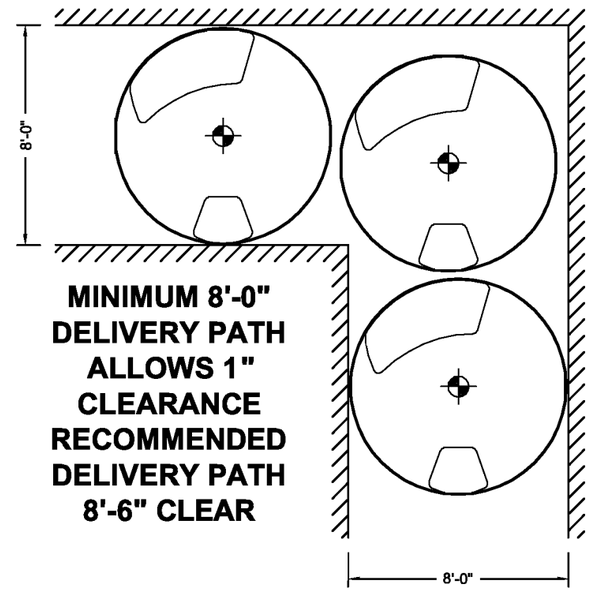

MINIMUM 8'-0" DELIVERY PATH ALLOWS 1" CLEARANCE RECOMMENDED DELIVERY PATH 8'-6" CLEAR

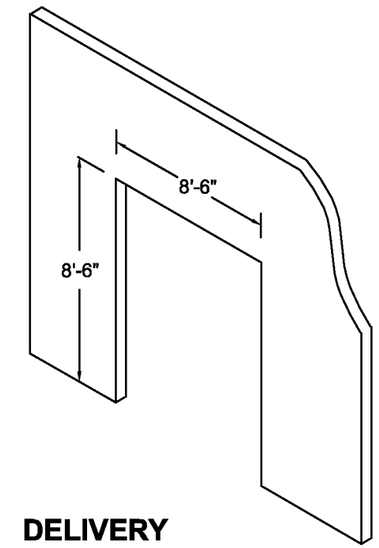

DELIVERY ACCESS OPENING "NOT TO SCALE"

OASIS MARK II COMPONENT LIST

CRATE #	COMPONENT	LENGTH (CRATED)	WIDTH (CRATED)	HEIGHT (CRATED)	WEIGHT (CRATED)
	MAGNET	8'-7"	8'-3"	9'-7"	31,600 lbs
1	COVERS	9'-1"	7'-5"	3'-0"	772 lbs
2	COVERS	9'-1"	7'-5"	3'-0"	772 lbs
3		5'-1"	4'-9"	3'-9"	948 lbs
4		9'-1"	3'-8"	3'-11"	1345 lbs
5	GRADIENT AMP	3'-6"	2'-10"	7'-0"	1323 lbs
6	RFIP CABINET	4'-0"	3'-4"	7'-1"	1434 lbs
7		3'-4"	2'-2"	4'-3"	276 lbs
8	FILTER BOX	5'-7"	3'-7"	2'-8"	331 lbs
9	CABLES & HOSES	5'-3"	4'-1"	3'-1"	982 lbs
10	GRADIENT	4'-0"	4'-0"	24"	1367 lbs
11	GRADIENT COILS	4'-1"	4'-1"	1'-7"	342 lbs
12		7'-1"	3'-6"	3'-6"	651 lbs
13	PHANTOMS, MISC	7'-1"	3'-6"	3'-8"	816 lbs
14		5'-3"	2'-10"	3'-7"	254 lbs
15	HEAT EXCHANGER	3'-8"	3'-6"	3'-7"	345 lbs
	ITEMS SHIPPED SEPARATELY PRIOR TO MAGNET DELIVERY				CHILLER MUST BE DELIVERED AND INSTALLED PRIOR TO MAGNET DELIVERY
	CHILLER OPTIONAL OUTDOOR UNIT	TBD	TBD	TBD	

DELIVERY ACCESS OPENING

1. RECOMMENDED DELIVERY ACCESS OPENING IS 8'-6" (H) X 8'-6" (W)
2. MINIMUM RECOMMENDED HEIGHT FOR ACCESS OPENING IS 8'-2" WHEN USING 4" HIGH MOVING SKATES. 4" HIGH SKATES PROVIDE +/-1/2" OF GROUND CLEARANCE FOR GANTRY FEET. THIS IS THE MINIMUM ACCEPTABLE LIFT.
3. IF THE MINIMUM OPENING HEIGHT CAN NOT BE ACHIEVED, EXTENSIVE SITE EVALUATION AND COORDINATION BETWEEN CONTRACTOR, RIGGER, RF VENDOR AND SITE PLANNING WILL BE NECESSARY TO DETERMINE IF DELIVERY IS POSSIBLE.

ROOF HATCH ACCESS OPENING

1. IF A ROOF HATCH IS TO BE USED FOR DELIVERY OF THE OASIS MARK II GANTRY, THE MINIMUM REQUIRED OPENING IS 9'-0" X 9'-0", RECOMMENDED OPENING IS 10'-0" X 10'-0"

HITACHI MEDICAL SYSTEMS AMERICA
1959 SUMMIT COMMERCE PARK TWINSBURG, OH 44087-2371
(800) 800-3106 WWW.HITACHIMED.COM

GAUSS FIELDS

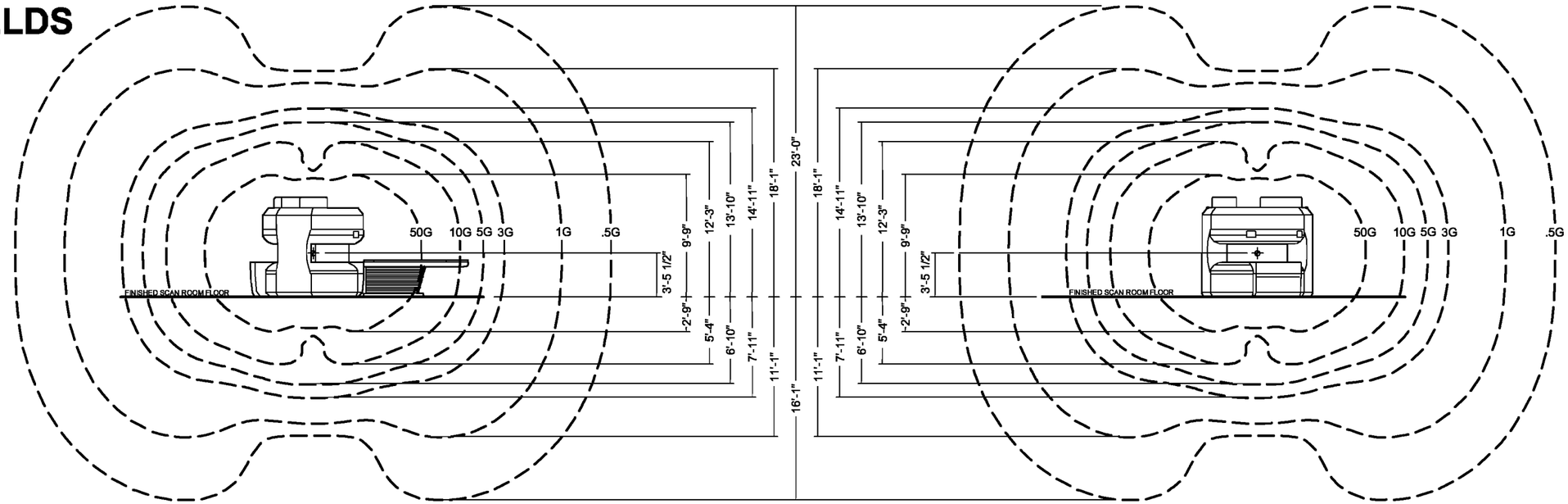

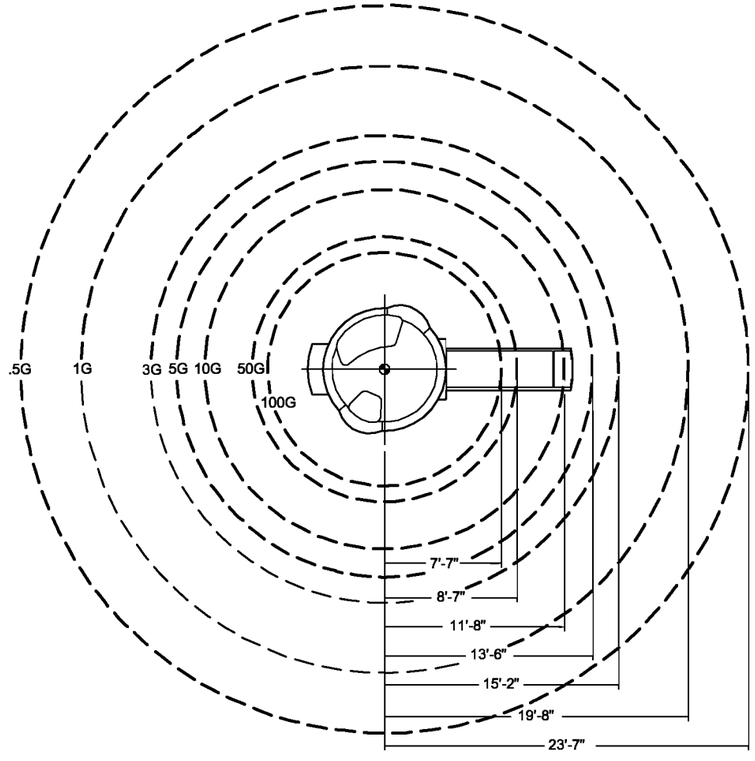

HITACHI MEDICAL SYSTEMS AMERICA
1959 SUMMIT COMMERCE PARK TWINSBURG, OH 44087-2371
(800) 800-3106 WWW.HITACHIMED.COM

GAUSS FIELDS

DATE: 04/30/2012 | REVISION: 05/18/2012

SYSTEM COMPONENTS

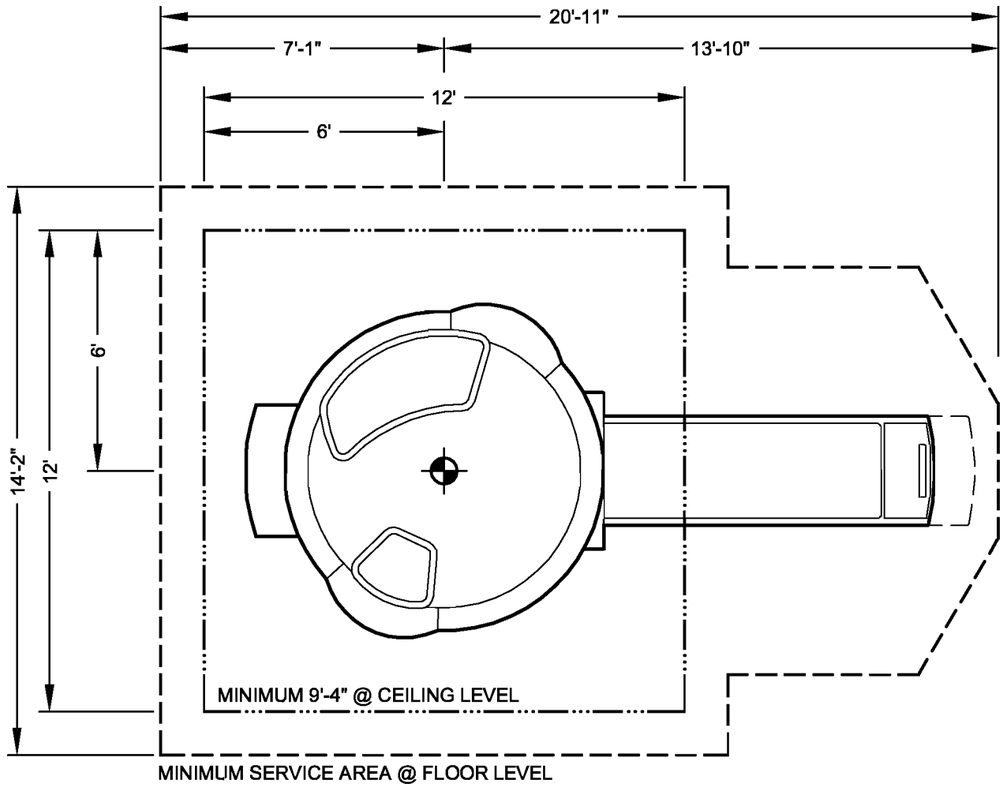

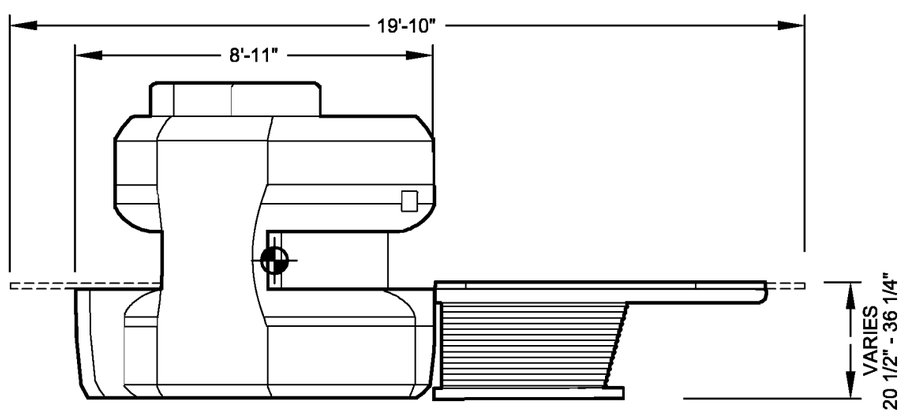

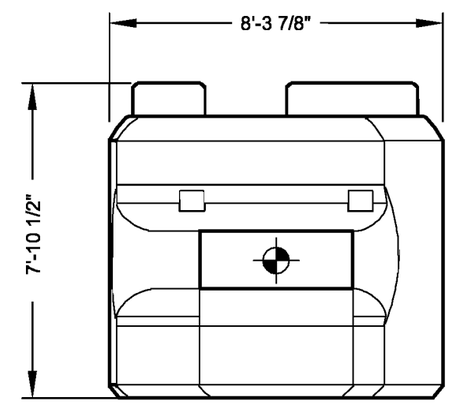

OASIS MARK II GANTRY AND PATIENT TABLE

MULTIPLE CABLE CONNECTIONS AT REAR AND SIDE OF GANTRY.
SERVICE AREA MUST BE MAINTAINED WHEN SITING.

HITACHI MEDICAL SYSTEMS AMERICA
1959 SUMMIT COMMERCE PARK TWINSBURG, OH 44087-2371
(800) 800-3106 WWW.HITACHIMED.COM

SYSTEM COMPONENTS

DATE: 04/30/2012	REVISION: 05/18/2012
OASIS MARK II STANDARD DETAILS	PAGE 25 OF 27

SYSTEM COMPONENTS (CONT)

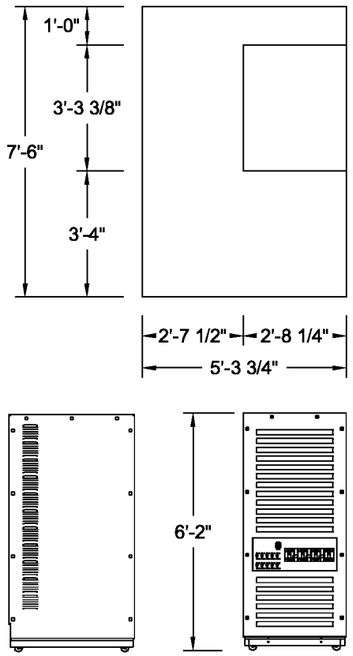

RFIP CABINET

MULTIPLE CABLE CONNECTIONS AND MAIN POWER CONNECTION WILL LIMIT CABINET MOVEMENT FOR SERVICING. SERVICE AREA MUST BE MAINTAINED WHEN SITING.

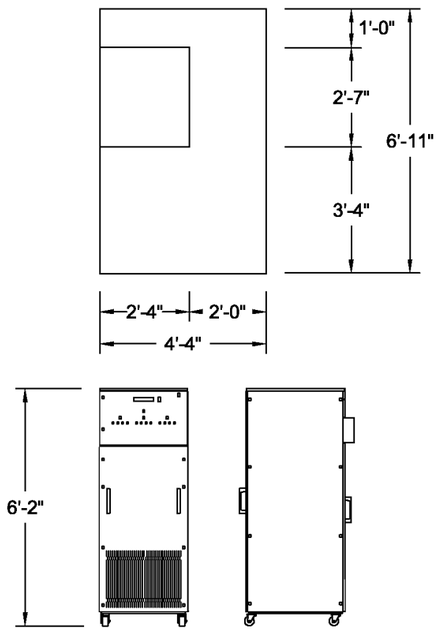

GRADIENT AMPLIFIER CABINET

MULTIPLE CABLE CONNECTIONS, GRADIENT CABLE CONNECTIONS, AND WATER HOSE CONNECTIONS WILL LIMIT CABINET MOVEMENT FOR SERVICING. SERVICE AREA MUST BE MAINTAINED WHEN SITING.

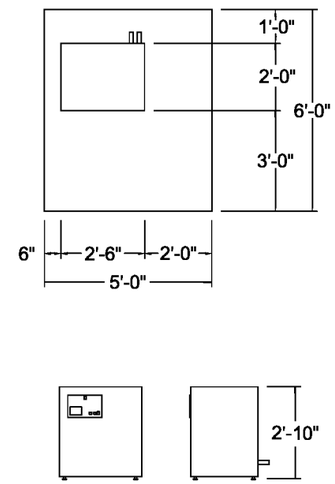

HEAT EXCHANGER

WATER HOSE CONNECTIONS FROM R-1200 CHILLER AND TO SENSE UNIT. SERVICE AREA MUST BE MAINTAINED WHEN SITING.

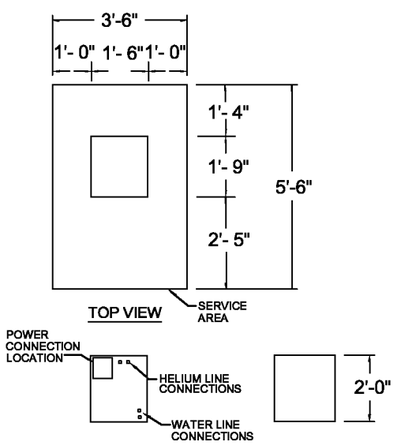

HELIUM COMPRESSOR UNIT

MULTIPLE CABLE CONNECTIONS , HELIUM AND PLUMBING LINES RESTRICT ALLOWABLE MOVEMENT FOR THIS UNIT. SERVICE AREA MUST BE MAINTAINED WHEN SITING.

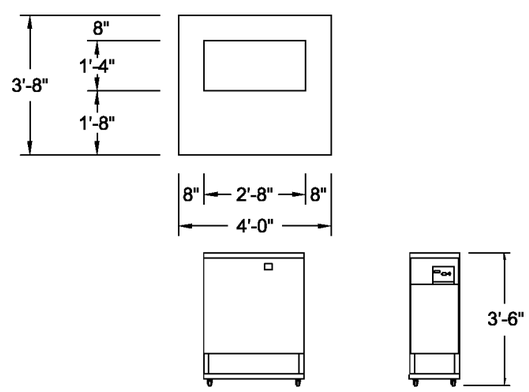

SENSE UNIT

MULTIPLE CABLE CONNECTIONS , HELIUM AND PLUMBING LINES RESTRICT ALLOWABLE MOVEMENT FOR THIS UNIT. SERVICE AREA MUST BE MAINTAINED WHEN SITING.

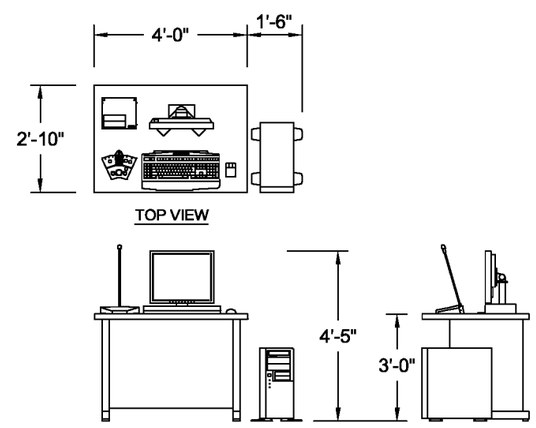

OPERATOR CONSOLE

MULTIPLE CABLE CONNECTIONS COMPONENTS ARE SEPARATE AND MAY BE PLACED ON CASEWORK/COUNTERTOP SUPPLIED AND INSTALLED BY CUSTOMER.

NOTE: OTHER SUPPORT COMPONENTS MAY NOT BE LOCATED WITHIN THE EQUIPMENT ROOM WITHOUT APPROVAL OF THE SITE PLANNING DEPARTMENT. REQUIRED EQUIPMENT SERVICE AREAS MAY NOT BE COMPROMISED.

HITACHI MEDICAL SYSTEMS AMERICA
1959 SUMMIT COMMERCE PARK TWINSBURG, OH 44087-2371
(800) 800-3106 WWW.HITACHIMED.COM

SYSTEM COMPONENTS

DATE: 04/30/2012	REVISION: 05/18/2012
OASIS MARK II STANDARD DETAILS	PAGE 26 OF 27

HITACHI OASIS MARK II PRE-DELIVERY CHECKLIST

The successful delivery of the Hitachi OASIS MARK II with the cryostat pre-cooled (filled with cryogens) requires that certain items and systems **MUST** be completed and/or operational prior to the unit arriving on site. The items in this checklist **MUST** be completed in order to ensure a proper environment for maintaining the system once it is on site. The magnet, though filled with cryogens, will not be at field until later in the installation process. A clear schedule with a suite completion plan must also be in place to ensure a smooth room closure process during installation. **ALTHOUGH ITEMS ON THIS CHECKLIST DO NOT NEED TO BE COMPLETED AT THE TIME IT IS FILLED OUT, THEY MUST BE COMPLETED PRIOR TO DELIVERY OF THE SYSTEM.**

THIS CHECKLIST MUST BE COMPLETED AND RETURNED TO HMSA TWINSBURG A MINIMUM OF FOURTEEN (14) CALENDAR DAYS AND TEN (10) WORKING DAYS PRIOR TO DELIVERY

	Done	To be completed by
GENERAL CONSTRUCTION		
All Rooms are clean of construction dust and debris (broom clean)		
Contractor / Customer advised no construction may take place during shimming process (days 4 - 7 after delivery)		
Contractor advised and prepared for system delivery/room closure schedule (see pg 2 of 27 OASIS Standard Details)		
RF SHIELD		
Preliminary test completed and shield verified ground free		
Floor levelness verified by RF vendor: +/- 1/8" over entire area of gantry and patient table		
3"+ distance from top of wireway to bottom of filter panel rough opening on scan room side		
Wave Guides (4) installed in btm. wireway compartment. Must be flush to inside face of wireway on scan room side		
Wave Guides (2) installed above MCU. Must connect to (flush to inside face on scan rm side) overhead ww to gantry		
Filter Panel frames installed and ready for panel installation		
RF Vendor scheduled by contractor for access panel and filter panel installation and final test on 1st day of delivery		
SCAN ROOM		
All walls complete, sanded and painted (except access opening)		
Flooring complete. Protection to be provided by contractor and ready at start of delivery day 1		
Ceiling complete		
Lighting and power outlets installed and functioning		
Wireway on-site and available for installation (electrician to complete any remaining wireway day after delivery)		
Cryogen vent flange at 8'-6 3/4" AFF and vent pipe run to exterior, complete and ready for connection to magnet		
Emergency exhaust fan (w/wall switch) operational (switch may be located in equipment or control rooms)		
Oxygen monitor installed		

	Done	To be completed by
CONTROL and EQUIPMENT ROOMS		
Walls sanded and painted (except access opening if required)		
Flooring complete		
Ceiling Installed		
Cabinetry installed		
Wireway installed (with min 3" distance from top of ww to btm of filter panel rough opening on scan room side)		
Customer/contractor advised that only pre-approved punch list items may be addressed after delivery		
Floor drain in equipment room (located so it will NOT be directly under a system cabinet)		
CHILLER AND HEAT EXCHANGER		
Chiller installed (hard-wired, plumbed and ready for no-load startup)		
Chiller checklist completed and returned to Haskris (fax 847-956-6595)		
No load start-up scheduled with Haskris (completed chiller checklist required) 847-956-6420 prior to magnet delivery		
ELECTRICAL		
480 V, 30 Amp, 3 phase receptacle for Magnet Ramp supply (NEMA L16-30R outside of scan room door)		
480 V, 100 Amp, 3 phase supply line pulled to planned location of RFIP cabinet		
480 V, 3MCA, 15 MOCP, 3 phase supply line pulled to planned location of Heat Exchanger		
Single Point ground has been verified for MRI sub-panel		
Electrician scheduled to connect power to RFIP cabinet on 2nd day of delivery		
ENVIRONMENTAL		
HVAC operational in all rooms		
COMMUNICATIONS		
Phone lines available in control and equipment rooms for use by service personnel Phone #		
Network interface information sent to installchecklistgroup@hitachmed.com (pg 3 of 27 Oasis Standard Details)		
Network connections in place and functional with access to internet Network contact name:		
FACILITIES		
HMSA has 24 hour access		
Functional restroom facilities available in work area		
Empty 40 yd. dumpster on site morning of delivery with empty scheduled for 2nd morning		
Storage area for 6 cryogen dewars (36" x 48" each) available with unrestricted path to the Scan Room (42" width)		
Storage area approximately 600 sq. ft. (20'x30') available near scan room for misc. equipment and parts		

PRE-DELIVERY CHECKLIST

NOTE:
Please be advised that the site preparations as outlined in Site Planning Standard Details and related checklists are essential for delivery and installation. Because all arrangements for the delivery of your system must be completed two weeks in advance of delivery, any delay caused by incomplete site preparation will result in unavoidable additional cost related to scheduling and transportation of Riggers, delivery and installation personnel, cryogens, re-filling costs, storage costs, rescheduling fees, etc. These additional charges could exceed $25,000.

Planned Delivery Date:_____

Site Name:_____

Address:_____

NOTE:
1. Planned delivery date must be no less than fourteen (14) calendar days and ten (10) working days after this document is received by HMSA
2. The delivery date will be confirmed only after the signed checklist is received/accepted by HMSA and the availability of the rigging and installation teams is established.
3. By signing you acknowledge your acceptance of the requirements and responsibilities as explained above.

Key On-Site Contact Name: _____ Title:_____

Phone: _____

Date:_____ HMSA FSE Signature: _____

Name printed_____

Date:_____ Customer Signature:_____
(or authorized representative)
Name printed_____

Notes:
1. Scan and e-mail PDF file to: InstallChecklistGroup@HitachiMed.com
2. Contact assigned Site Planner with any questions
3. If MedRad injector has been purchased (optional), **customer/contractor** must schedule installation with MedRad for day 4 or 5 of Oasis installation

HITACHI OASIS MARK II PRE-DELIVERY CHECKLIST (REV 06/18/12) DM# 84477 v2 3 of 3

NOTE: A COPY OF THE PRE-DELIVERY CHECKLIST CAN BE PROVIDED IN PDF FORMAT BY THE SITE PLANNING DEPARTMENT. A COPY IS ALSO PROVIDED WHEN DOWNLOADING THE OASIS STANDARD DETAILS FROM www.hitachimed.com, CONTACT THE SITE PLANNING DEPARTMENT FOR THE CURRENT ACCESS CODE.

OEM PRODUCTS AND SERVICES

OEM PRODUCT AND SERVICE VENDORS ARE KEY TO YOUR SUITE PREPARATION. THEY SHOULD BE INVOLVED EARLY IN THE PLANNING PROCESS WHEN POSSIBLE. WHILE VENDORS LISTED BELOW HAVE DEMONSTRATED ACCEPTABLE CUSTOMER SERVICE IN THE PAST, THIS IN NO WAY IS TO BE CONSTRUED AS AN ENDORSEMENT OR A GUARANTEE OF FUTURE SERVICE. THIS LISTING IS PROVIDED AS A CONVENIENCE ONLY AND IS BY NO MEANS ALL-INCLUSIVE. THE CUSTOMER IS RESPONSIBLE FOR CHOOSING THEIR VENDORS.

UPON IDENTIFYING YOUR VENDORS, PROVIDE CONTACT INFORMATION TO HMSA SITE PLANNING.

RF VENDORS:

MULTIPLE VENDORS. CONTACT YOUR SITE PLANNER FOR VENDORS IN YOUR REGION.

OXYGEN MONITOR SYSTEMS

BAKER INDUSTRIAL EQUIPMENT INC.
(TELEDYNE REPRESENTATIVE)
PHONE: (412) 264-8271

NOTE: BAKER IS AN AUTHORIZED TELEDYNE REPRESENTATIVE. WHEN CALLING FOR A PRICE QUOTE, INFORM THEM THAT IT IS FOR A HITACHI MRI SYSTEM. THEY WILL PROVIDE THE APPROPRIATE FORMS TO ORDER SITE SPECIFIC LENGTH CABLES BETWEEN THE SENSOR AND MONITOR ALONG WITH THE REQUIRED RF FILTERS. THIS SERVICE MAY OR MAY NOT BE AVAILABLE FROM OTHER TELEDYNE REPRESENTATIVES.

MSA TOXGARD II
PHONE: (800) 672-4678
www. MSAnet.com

HELIUM VENT CONNECTOR MATERIAL

VENT FABRICS-VENT GLASS
PHONE: (773) 775-4477

LORENZ CLAMP
PHONE: (905) 372-2240

HELIUM VENT

ERNIES WELDING AND FABRICATING, INC
PHONE: (727) 536-6661
(888) 394-2754
WWW.QUENCHLINE.COM

MECHANICAL EQUIPMENT ISOLATION MATERIAL AND MOUNTINGS:

HAMMOND KINETICS - DUBLIN, OH
PHONE: (614) 889-0480
WWW.KINETICSNOISE.COM

SORBOTHANE, INC. - KENT, OH
PHONE: (330) 678-9444
WWW.SORBOTHANE.COM

UNISORB INSTALLATION TECHNOLOGIES
PHONE: (517) 764-6060
WWW.UNISORB.COM

MASON INDUSTRIES, INC.
PHONE: (631) 348-0282
WWW.MASON-IND.COM

VIBRATION ATTENUATION:

STS CONSULTANTS, LTD. - VERNON HILLS, IL
PHONE: (847) 279-2500
CONTACT: BERNARD HERTLEIN

GEOVISION - CORONA, CA
PHONE: (909) 549-1234

WIREWAYS:

WIREMOLD / WALKER
PHONE: (800) 621-0049 EXT. 4
CONTACT: WALKER WIREMOLD INFLOOR AND PRE-WIRE PROJECT TEAM

SOUND ATTENUATION:

MPC, INC
PHONE: (440) 835-1405
CONTACT: CHRIS HOLICK
WWW.MPCSILENTWALL.COM

RIGGERS:

NORCAL RIGGING & INSTALLATIONS
PHONE: 877-995-8840
CONTACT: CHRIS McCOWIN

JC DUGGAN, INC
PHONE: 718-384-3260
CONTACT: JOHN CEREGHINO

DIAMOND RIGGING CORPORATION
PHONE: 630-879-6500
CONTACT: MAX MAYER

AMBROSE RIGGING
PHONE: 215-674-9232
CONTACT: FRAN AMBROSE

HWP
PHONE: 314-865-0100
CONACT: JOSH CUMMINGS
BOB DEUTSCH

ABLE MACHINERY MOVERS
PHONE: 800-856-1914
CONTACT: MIKE ALIANELL

ATLAS INDUSTRIAL CONTRACTORS
PHONE: 800-562-8322
CONTACT: RAY BUDD

BURTON TRUCKING AND RIGGING
PHONE: 916-806-4800
CONTACT: RICHARD BURTON

BELGERS RIGGING
PHONE: 816-472-0000
CONTACT: MIKE SCOTT

CONTACT HMSA SITE PLANNING FOR THE MOST CURRENT LIST OF TRAINED RIGGERS
PHONE: 800-800-3106

APPROVED RECESSED CAN LIGHTS:

CONTACT THE SITE PLANNING DEPARTMENT AT 800-800-3106 FOR THE LATEST LIST OF APPROVED VENDORS

OASIS MARK II SYSTEM COLORS

COMPONENTS:	SIDE, BOTTOM AND TOP COVERS, TABLE BELOW, AND TABLE BASE, UPPER FRAME
COLOR:	WHITE
MUNSELL VALUE:	7.2Y 8.6/0.3
COMPONENTS:	BORE COVERS, TABLE TOP SUPPORT
COLOR:	PURE WHITE
MUNSELL VALUE:	3.5Y 9.0/0.3
COMPONENTS:	TABLE TOP
COLOR:	YELLOW
MUNSELL VALUE:	5.8Y 9.0/5.0
COMPONENTS:	ACCENT RING
COLOR:	SILVER
MUNSELL VALUE:	0.2Y 7.6/0.2

OASIS Mark II

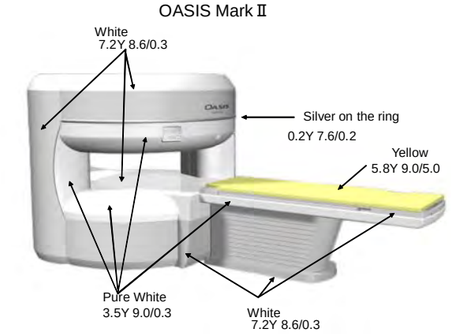

HITACHI MEDICAL SYSTEMS AMERICA
1959 SUMMIT COMMERCE PARK TWINSBURG, OH 44087-2371
(800) 800-3106 WWW.HITACHIMED.COM

OEM PRODUCTS AND SERVICES

DATE: 04/30/2012 | REVISION: 05/18/2012

OASIS MARK II STANDARD DETAILS | OEM ADDENDUM

HITACHI OASIS

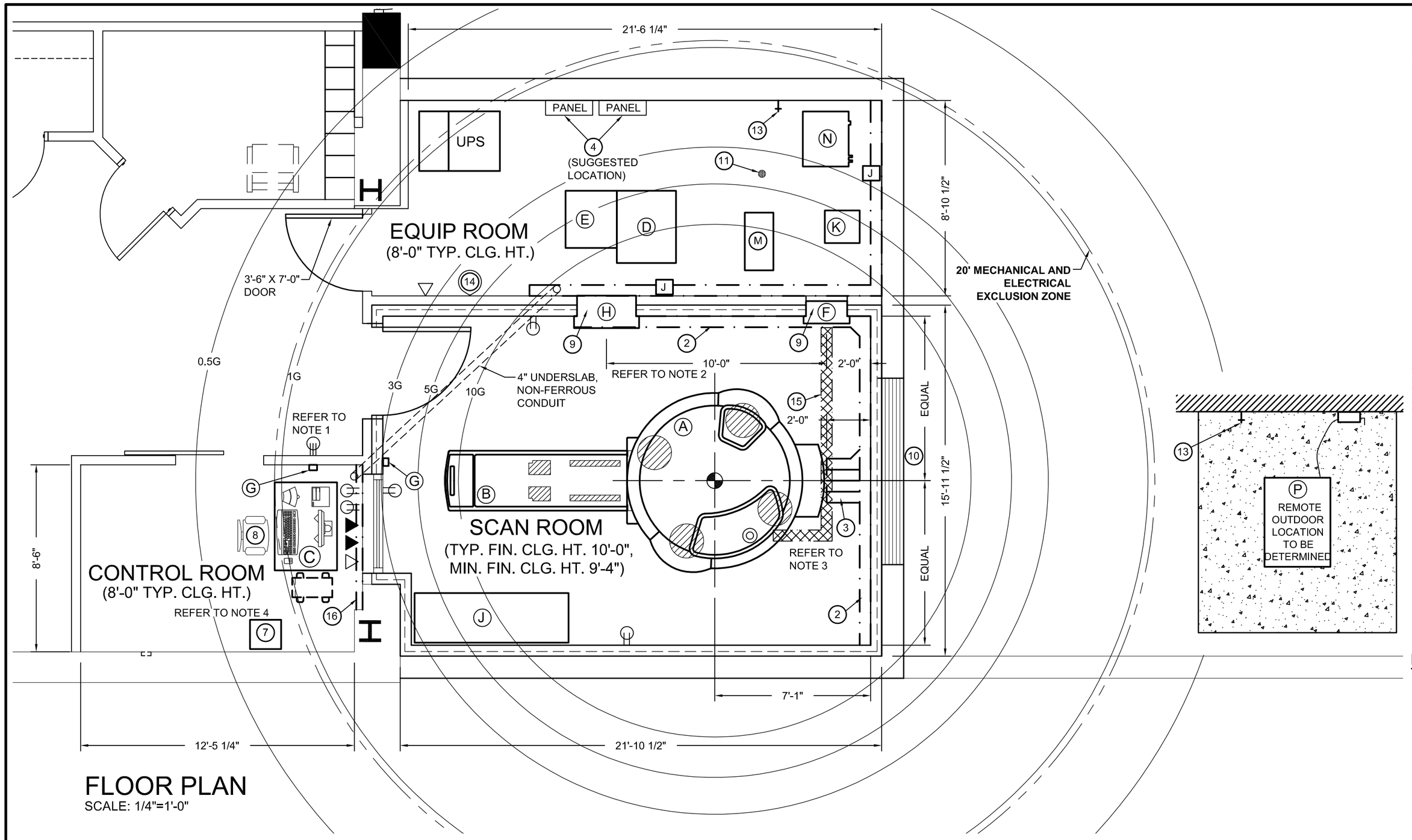

FLOOR PLAN

SCALE: 1/4"=1'-0"

LEGEND

- RF SHIELD REQUIRED. ARCHITECT TO VERIFY WALL CONSTRUCTION WITH RF VENDOR. IT MUST PROVIDE 80 dB ATTENUATION OR BETTER FROM 1-70MHz. (TYPICAL 5" RF WALL THICKNESS REFLECTED.)
- RF VIEW WINDOW, TYPICALLY 4'W x 3'H, (TYP. 36" AFF)
- REMOVABLE EQUIPMENT ACCESS PANEL FOR DELIVERY OF THE SYSTEM. MINIMUM 8'-6"W X 8'-6"H.
- JUNCTION BOX FOR POWER TO RFIP CABINET OR HEAT EXCHANGER.
- MANUAL DISCONNECT
- 480V, 30 AMP, 3Ph, 4 WIRE, HUBBELL L16-30 RECEPTACLE (OR EQUAL) FOR RAMP-UP TOOL USAGE.
- 115V, 15 AMP CONVENIENCE OUTLETS, MINIMUM OF TWO (2) PER ROOM REQUIRED FOR SERVICE AND MAINTAINANCE.
- PHONE LINES - ONE (1) REQUIRED IN EQUIPMENT ROOM AND ONE (1) REQUIRED IN CONTROL ROOM
- DATA PORT FOR BROAD BAND NETWORK CONNECTION TO STANDARD 1G BASE T LINE. MAY BE THROUGH CUSTOMER'S IN-HOUSE NETWORK.
- 6" X 24" ON-WALL WIREWAY WITH REMOVABLE COVER AND THREE (3) DIVIDERS. METAL ONLY. MUST BE NON-FERROUS IN THE SCAN ROOM.
- 6" X 24" ON-FLOOR WIREWAY WITH REMOVABLE COVER AND THREE (3) DIVIDERS. NON-FERROUS METAL ONLY.
- 3" X 6" OVERHEAD CABLE TRAY (WALKER SPMA-A-6-3S OR EQ). NON-FERROUS METAL ONLY.
- MAGNET ISOCENTER

EQUIPMENT BY HMSA

- (A) OASIS GANTRY
- (B) PATIENT TABLE
- (C) OPERATOR'S WORKSTATION
- (D) RFIP CABINET
- (E) GCPA CABINET
- (F) MCU FILTER PANEL
- (G) EMERGENCY RUN-DOWN BUTTON (ERDU)
- (H) RFIP FILTER PANEL
- (J) COIL STORAGE CABINET
- (K) HELIUM COMPRESSOR
- (M) SENSE UNIT
- (N) HEAT EXCHANGER
- (P) R1200 OUTDOOR CHILLER

BY OTHERS

- (2) 6" X 24" NON-FERROUS ON-WALL WIREWAY
- (3) 6" X 24" NON-FERROUS ON-FLOOR WIREWAY
- (4) A.C. POWER PANEL (SIZED PER CODE)
- (5) OXYGEN PROBE
- (6) OXYGEN MONITOR
- (7) LASER IMAGER
- (8) CHAIR
- (9) 1 3/4" WAVE GUIDES
- (10) DELIVERY ACCESS PANEL
- (11) FLOOR DRAIN
- (12) CASEWORK
- (13) HOSE BIBB
- (14) HELIUM TANK RESTRAINT
- (15) 3" x 6" OVERHEAD CABLE TRAY
- (16) 3 1/2" x 6" WIREWAY

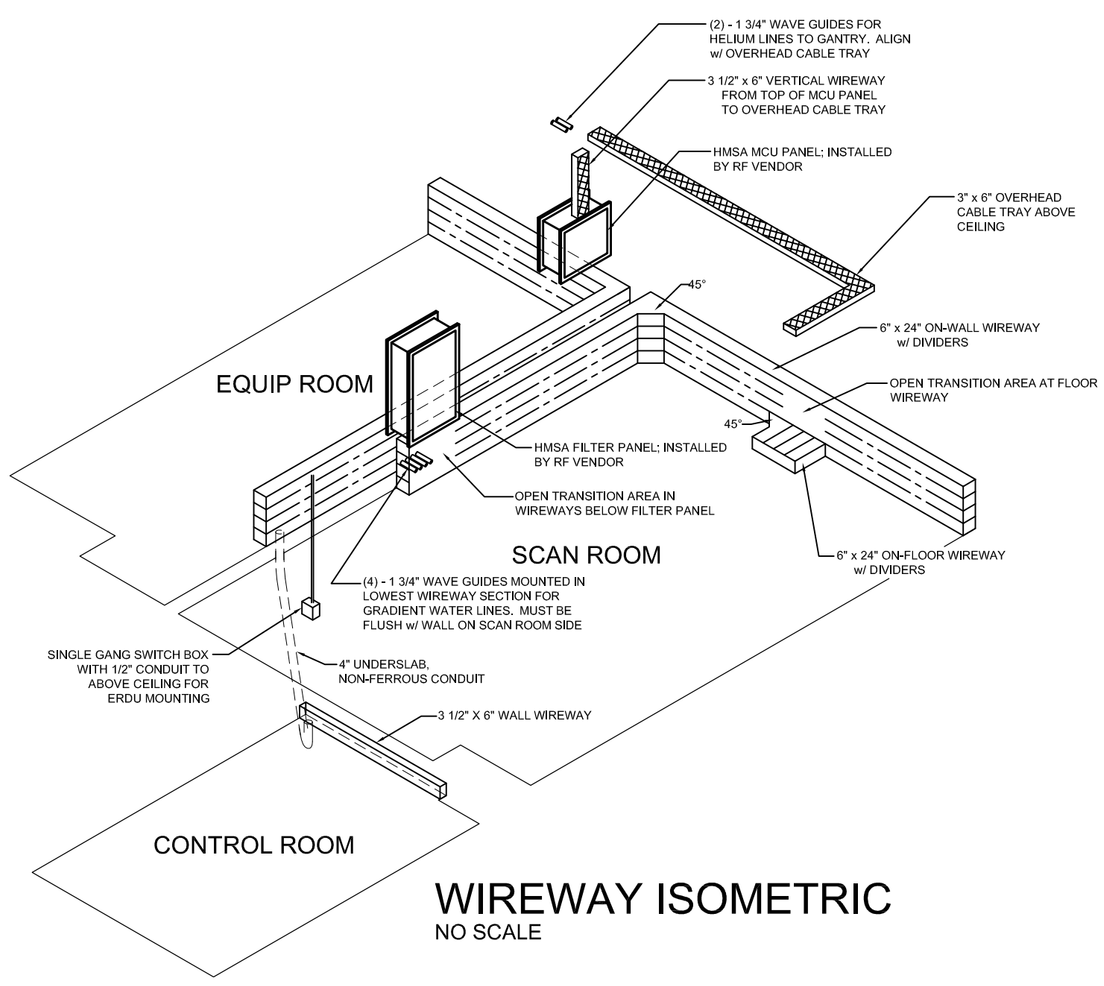

WIREWAY ISOMETRIC

NO SCALE

NOTES

1. 480V, 30A, 3Ph, 4 WIRE, NEMA L16-30 RECEPTACLE FOR USE WITH RAMP-UP TOOL TO INITIALIZE MAGNETIC FIELD. THE OASIS SYSTEM DRAWS ONLY MINIMAL POWER DURING INITIALIZATION OF FIELD. RAMP-UP TOOL LOAD SHOULD NOT BE INCLUDED WHEN CALCULATING TOTAL LOAD ON PANEL FROM WHICH THE OASIS MRI SYSTEM DRAWS ITS POWER.
2. **FILTER PANELS MUST BE PLACED AS SHOWN ON THIS DRAWING TO ENSURE PROPER FUNCTION OF THE OASIS MRI SYSTEM.**
3. **WIREWAYS MUST BE RUN AS SHOWN ON THIS DRAWING TO ENSURE PROPER FUNCTION OF THE OASIS MRI SYSTEM.**
4. CUSTOMER'S ARCHITECT/CONTRACTOR IS RESPONSIBLE FOR VERIFYING ALL POWER AND HVAC SPECIFICATIONS FOR EQUIPMENT NOT SUPPLIED BY HMSA.
5. THIS DRAWING IS NOT FOR CONSTRUCTION PURPOSES. CUSTOMER IS RESPONSIBLE FOR HIRING QUALIFIED DESIGN PROFESSIONALS TO PREPARE CONSTRUCTION DOCUMENTS. CONSTRUCTION SHALL BE PERFORMED IN ACCORDANCE WITH THIS SITE SPECIFIC DRAWING, THE SPECIFICATIONS IN THE HMSA STANDARD DETAILS FOR THIS SYSTEM AND ALL APPLICABLE CODES AND REGULATIONS.
6. THE MAXIMUM WALL THICKNESS FROM THE SCAN ROOM SIDE OF THE RF SHIELD TO THE FINISHED INSIDE FACE OF THE EQUIPMENT ROOM WALL IS 11" IN ORDER TO ENSURE THE PROPER FITMENT OF THE RFIP FILTER PANEL.
7. HMSA RESERVES THE RIGHT TO WITHHOLD THE APPROVAL OF A SITE PENDING AN ON-SITE REVIEW AND APPROPRIATE QUALIFICATION TESTING BY HMSA PERSONNEL.
8. CONSTRUCTION DRAWINGS ARE TO BE SUBMITTED TO THE HMSA SITE PLANNING DEPARTMENT FOR REVIEW PRIOR TO CONSTRUCTION.
9. CONTACT THE HMSA SITE PLANNING DEPARTMENT AT 800-800-3106 IMMEDIATELY REGARDING ANY DEVIATION BETWEEN THIS DRAWING, HMSA OASIS STANDARD DETAILS AND/OR CONSTRUCTION DOCUMENTS.
10. THIS DRAWING IS THE PROPERTY OF HITACHI MEDICAL SYSTEMS AMERICA, INC. (HMSA) AND IS NOT FOR CONSTRUCTION PURPOSES. THIS DRAWING, IN CONJUNCTION WITH THE STANDARD DETAILS FOR THE OASIS MRI SYSTEM, IS FOR THE USE OF THE CUSTOMER'S DESIGN PROFESSIONALS TO PREPARE APPROPRIATE CONSTRUCTION DOCUMENTS IN ACCORDANCE WITH ALL APPLICABLE CODES AND REGULATIONS. HMSA RESERVES THE RIGHT TO REFUSE TO INSTALL ANY OR ALL EQUIPMENT WHEN THE ROOM PREPARATION DOES NOT MEET SPECIFICATIONS. THE CURRENT STANDARD DETAILS MAY BE OBTAINED BY CONTACTING HMSA'S SITE PLANNING DEPARTMENT AT 800-800-3106.

SCALE: AS NOTED
DATE: 06/13/2014
CHECKED BY: DR
DRAWN BY: JLP
FILE: 100372-PerryPoint-VA Perry Point MD F 2PVG
REVISION: ADD UPS SYSTEM IN EQUIP. ROOM
SHEET 1 of 1
DRAWING NUMBER : 100372-F

OASIS SITE PLAN FOR:
PERRY POINT VA HOSPITAL
PERRY POINT, MD

HITACHI MEDICAL SYSTEMS, AMERICA
1959 SUMMIT COMMERCE PARK TWINSBURG, OH 44087-2371
(800) 800-3106 WWW.HITACHIMED.COM

HITACHI
Inspire the Next