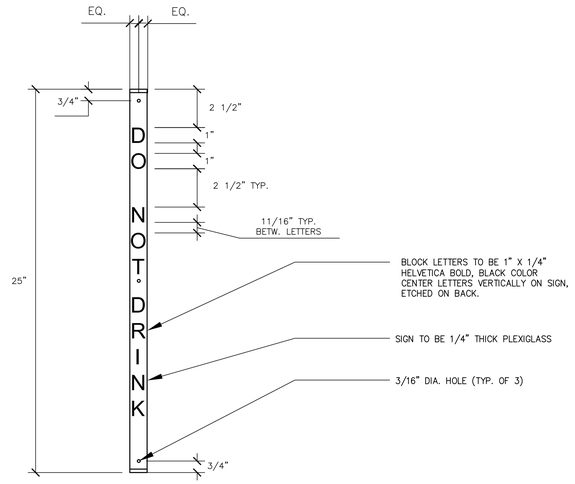

C5 RECLAIMED WATER SIGN

3"=1'-0"

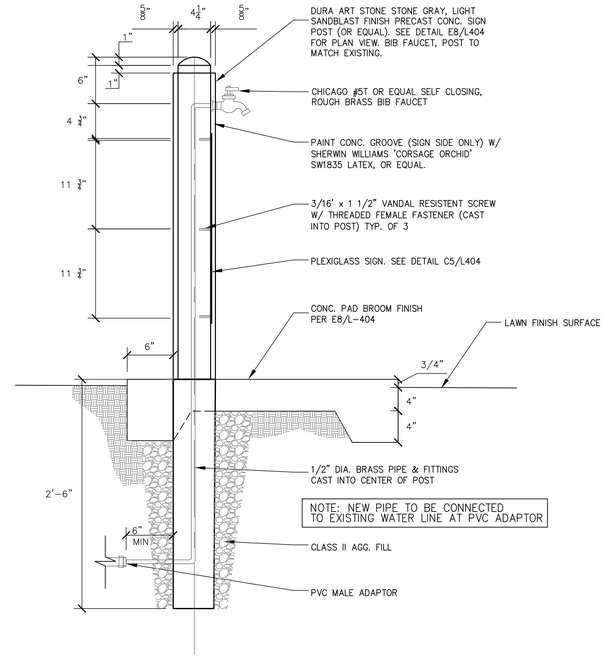

C8 BIB FAUCET

1 1/2"=1'-0"

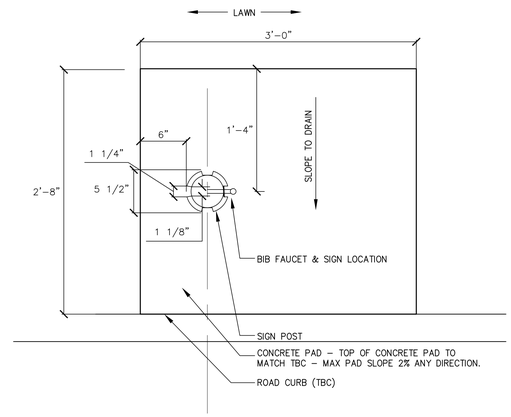

E8 FAUCET BASE - PLAN

11/2"=1'-0"

CONSTRUCTION DOCUMENTS

Revisions	Date

LICENSED LANDSCAPE ARCHITECT
REBECCA MCNETT FREEMAN
No. 4639
Signature
01/31/15
Renewal Date
Date
STATE OF CALIFORNIA

JACOBS
1050 20TH STREET, SUITE 200
SACRAMENTO, CA 95811
PHONE (916) 929-3323 FAX (916) 929-1772

Subconsultant List

THE SIERRA WEST GROUP, LLC 9700 BUSINESS PARK DRIVE, STE. 102, SACRAMENTO, CA 95827 (916) 925-4000

NATIONAL CEMETERY ADMINISTRATION

Drawing Title: CONSTRUCTION DETAILS WATER FAUCET

Approved: Director, Office of Construction Management

Approved: Director, Project Management Service

Project Title: RENOVATE ROSTRUM AND ROAD

Building Number

Checked: WMR

Drawn: RJM

Location: GOLDEN GATE NATIONAL CEMETERY, 1300 SNEATH LANE, SAN BRUNO, CALIFORNIA

Date: JULY 30, 2014

Project No. 895CM3047

DRAWING NO. L-404

Dwg. 18 of 18

CONSTRUCTION DOCUMENTS

P:\Projects\FY\W0704 VA IDIQ Golden Gate Rostrum\zDrawings\UDP_Cds\11-L-401-404 Construction Details - Rail & Stage Walls.dwg 7-29-14 02:37:53 PM mcnellfreemanrj