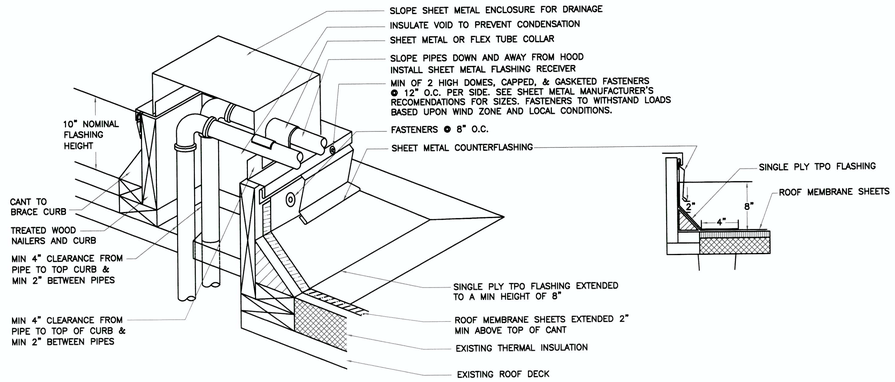

NOTES:

1. 2-HRS ROOF ASSEMBLY SHALL BE MAINTAINED.
2. SAD AND SSD FOR ADDITIONAL INFORMATION.

1 PIPING THROUGH ROOF DECK DETAILS

N.T.S.

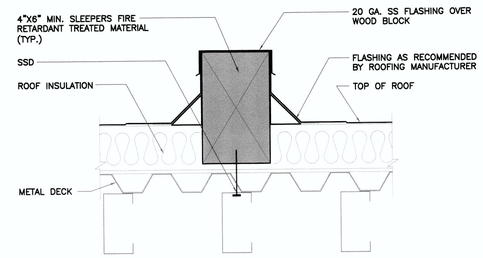

NOTES:

1. 2-HRS ROOF ASSEMBLY SHALL BE MAINTAINED.
2. SAD AND SSD FOR ADDITIONAL INFORMATION.

2 ROOF CURB SUPPORT

N.T.S.

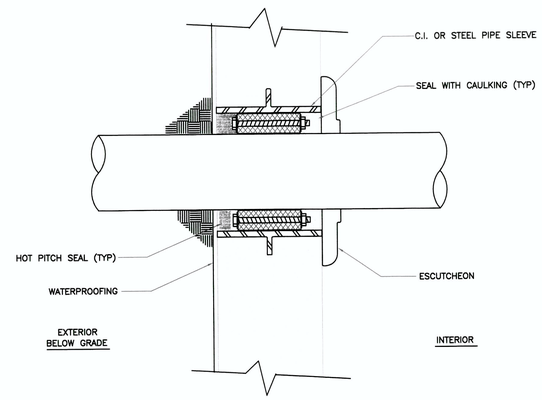

3 BELOW GRADE WALL PENETRATION FOR PIPING

N.T.S.

Revisions:	Date

CONSULTANTS:

STRUCTURAL:	DEGENKOLB ENGINEERS; 235 MONGOMERY STREET., SUITE 500; SAN FRANCISCO, CA 94104
MECHANICAL:	HTC ENGINEERS; 1529 CYPRESS ST., SUITE 103; WALNUT CREEK, CA 94596
ELECTRICAL:	BAY AREA CONSULTING ENGINEERS; 311 CALIFORNIA STREET, SUITE 720; SAN FRANCISCO, CA 94104
CIVIL ENGINEER:	GHD CIVIL ENGINEERS; 2235 MERCURY WAY, SUITE 150; SANTA ROSA, CA 95407
ESTIMATING:	CUMMING CORPORATION; 1970 BROADWAY, SUITE 630; OAKLAND, CA 94612
SURVEYORS:	MARTIN M. RON ASSOCIATES, INC.; 859 HARRISON ST., SUITE 200; SAN FRANCISCO, CA 94107
UTILITY LOCATORS:	CRUZ BROTHERS LOCATORS; P.O. BOX 66768; SCOTTS VALLEY, CA 95067

REGISTERED PROFESSIONAL ENGINEER VALEED ALBAW M27121 EXP.06/30/13 MECHANICAL STATE OF CALIFORNIA

ARCHITECT/ENGINEERS:

Architecture | Engineering | Planning
Hammel, Green and Abrahamson, Inc.
445Bush Street - Fourth Floor
San Francisco, California USA 94108
Telephone 415.962.2592
Facsimile 415.962.2598

REGISTERED ARCHITECT FRANK MARTIN SHON U13 EXPIRES 12/31/13 STATE OF CALIFORNIA

N TRUE

Drawing Title: BLDG 22 – PLUMBING – DETAILS.

Scale:

Approved: Project Director

Project Title: **VA Medical Center Seismic Replacement And Retrofit**

Location: **San Francisco, CA**

Date: **10 / 22 / 2012** | Checked: **WHA** | Drawn: **MR**

Project Number: **2941-001-00**

Building Number: **9, 10 & 22**

Drawing Number: **P302**

Office of Facilities Management

Department of Veterans Affairs

S:\proj08\hgc\hgc0801\p302.dwg, 10/23/2012 5:09:45 PM, Muhammad, HTC Engineers, HTC Engineers