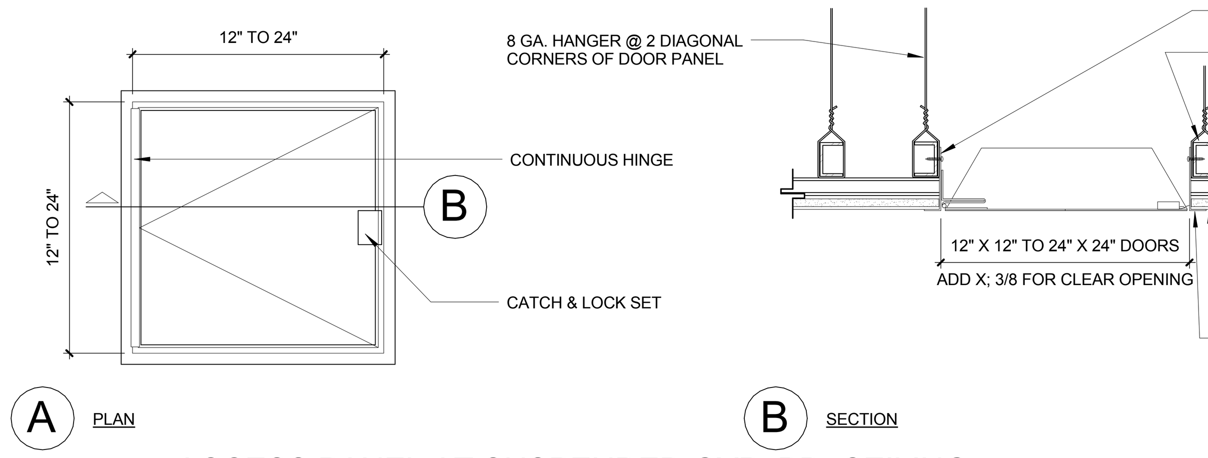

18 ACCESS PANEL AT SUSPENDED GYP. BD. CEILING

N.T.S.

ALLOWABLE CEILING SPANS - DEFLECTION LIMIT L/240						
SSMA NO/SIZE	GAGE	SPACING	A (IN^2)	I (IN^4)	S (IN^3)	ALLOW. SPAN
162S125-33	20	12	0.145	0.067	0.083	6'-11"
162S125-33	20	16	0.145	0.067	0.083	6'-3"
250S125-33	20	12	0.176	0.178	0.142	9'-7"
250S125-33	20	16	0.176	0.178	0.142	8'-8"
250S125-43	18	12	0.227	0.228	0.182	10'-5"
250S125-43	18	16	0.227	0.228	0.182	9'-5"
362S125-33	20	12	0.215	0.421	0.232	11'-9"
362S125-33	20	16	0.215	0.421	0.232	10'-9"
362S125-43	18	12	0.278	0.540	0.298	12'-10"
362S125-43	18	16	0.278	0.540	0.298	11'-9"
400S125-33	20	12	0.228	0.531	0.265	12'-2"
400S125-33	20	16	0.228	0.531	0.265	11'-2"
400S125-43	18	12	0.295	0.682	0.341	13'-3"
400S125-43	18	16	0.295	0.682	0.341	12'-2"
600S125-33	20	12	0.297	1.409	0.470	13'-10"
600S125-33	20	16	0.297	1.409	0.470	12'-10"
600S125-43	18	12	0.385	1.817	0.606	14'-11"
600S125-43	18	16	0.385	1.817	0.606	13'-10"
600S137-33	20	12	0.318	1.582	0.527	15'-9"
600S137-33	20	16	0.318	1.582	0.527	14'-7"
600S137-43	18	12	0.413	2.042	0.681	16'-10"
600S137-43	18	16	0.413	2.042	0.681	15'-8"
600S162-33	20	12	0.344	1.793	0.598	18'-0"
600S162-33	20	16	0.344	1.793	0.598	16'-8"
600S162-43	18	12	0.447	2.316	0.772	19'-3"
600S162-43	18	16	0.447	2.316	0.772	17'-11"

NOTE:
1) ICBO ER 4943P FOR 13 PSF MAX LATERAL LOAD ON CEILING JOISTS
2) ALL JOISTS SHALL BE FULLY BRACED OR LATERALLY BRACED AT MIDSPAN
3) ALLOWABLE CEILING SPAN CALCULATIONS BASED ON 33KSI YIELD STRENGTH STEEL
4) END BEARING LENGTH = 1" MIN
5) ALL MTL STUD FRAMING FASTENERS PER ER-5202 UNO.

17 CEILING JOIST SCHEDULE

1 : 1

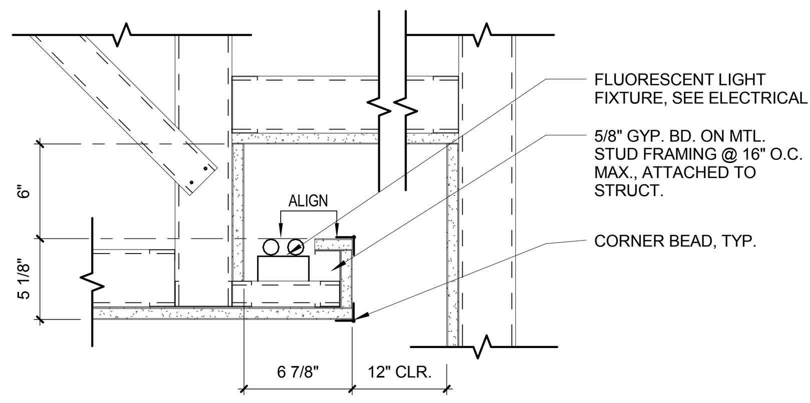

14 LIGHT ALCOVE @ TOILET ROOM

1 1/2" = 1'-0"

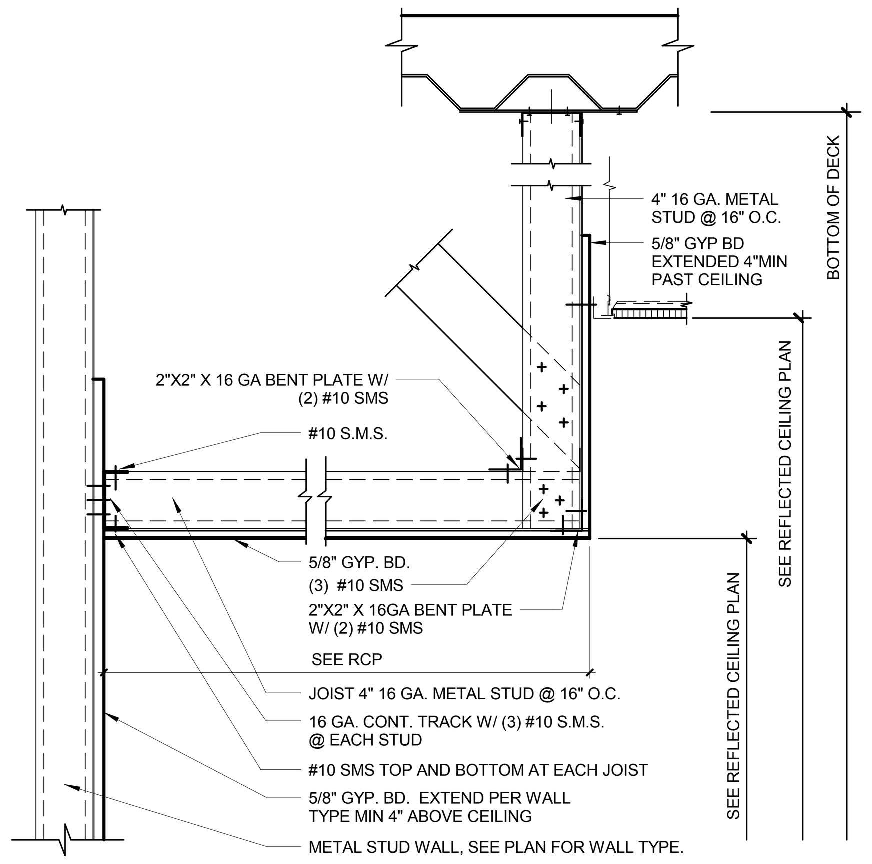

13 TYPICAL SOFFIT DETAIL

1 1/2" = 1'-0"

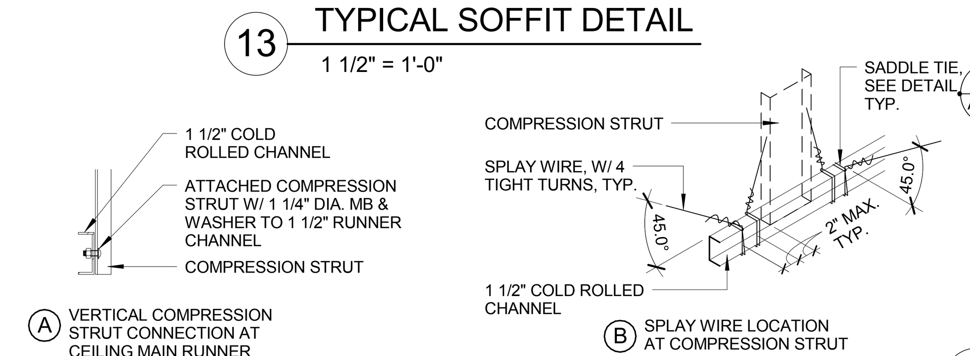

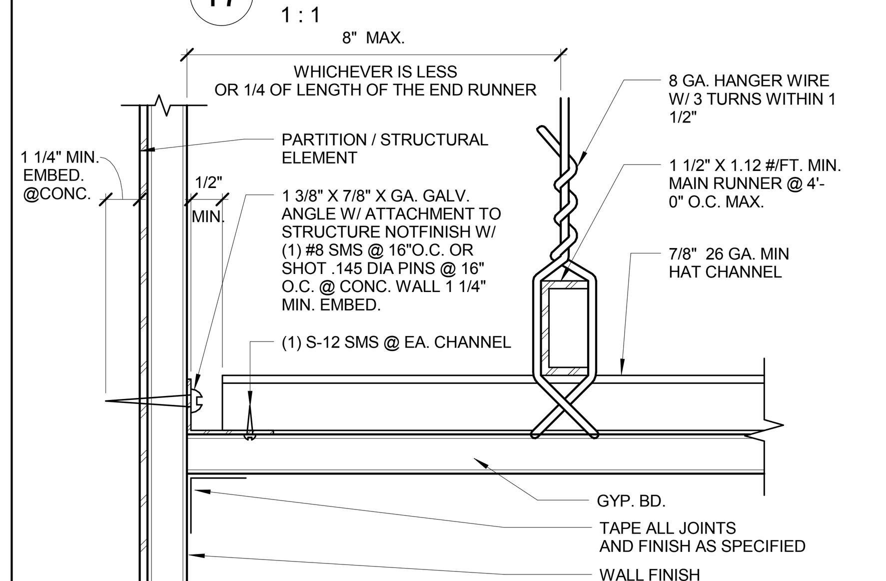

16 WALL PARALLEL TO RUNNER

6" = 1'-0"

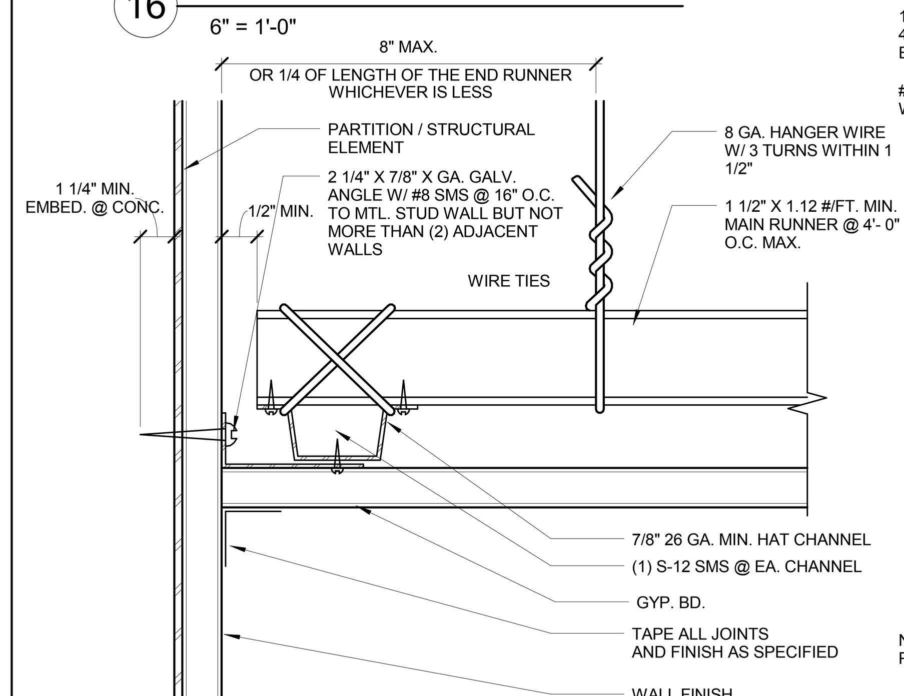

15 WALL PERP. TO MAIN RUNNER

6" = 1'-0"

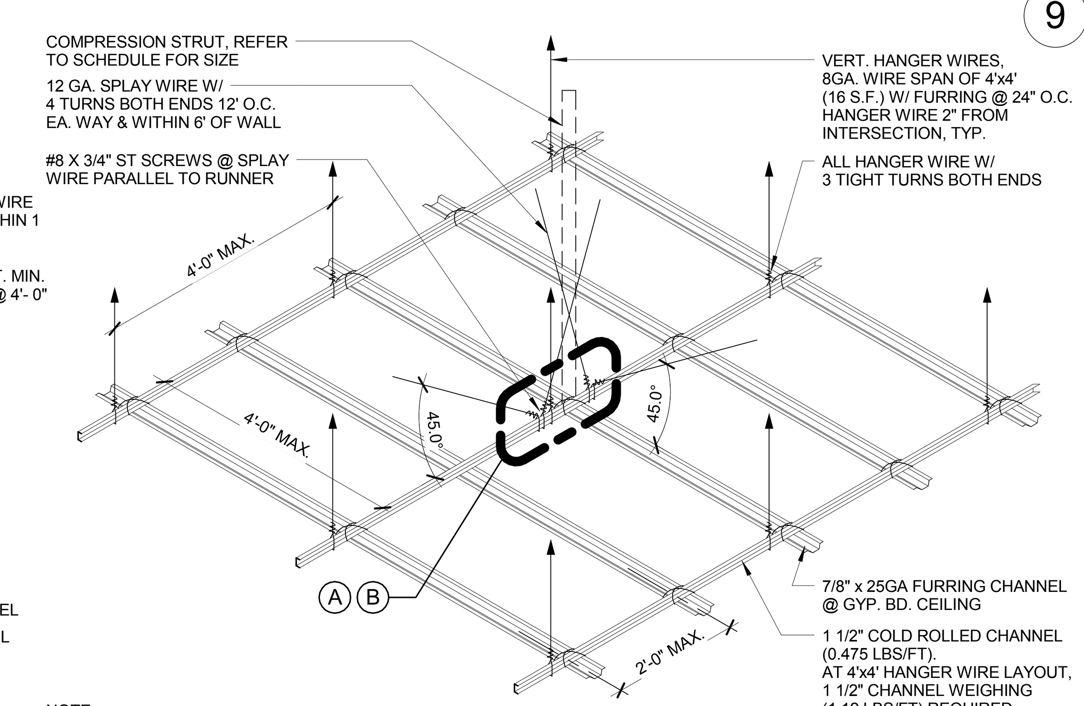

NOTE:
PROVIDE 6" CLR. BETWEEN WIRES AND DUCTS, CONDUITS OR PIPES

12 SUSPENDED GYP. BD/CEMENT PLASTER CEILING FRAMING

1/2" = 1'-0"

COMPRESSION STRUT CALCULATION:

SINCE THE MAXIMUM SLENDERNESS RATIO (KL/R) IS 200, THE RESULTING EULER BUCKLING STRESS, DIVIDED BY A FACTOR OF SAFETY OF 23/12 IS: Fa=12(n2/)29e6(1.33))/23(2002/))=4970 PSI

THE FOLLOWING CALCULATIONS ARE BASED ON DOWN Dx26 CEILING, THE MAXIMUM VERTICAL FORCE IS 274#

USE 1/2" EMT FOR MAXIMUM LENGTH 4'-0"

A=0.088 IN^2 R=0.238 IN L-MAX=200(O.238)=47.6"
Fa=274#/0.088 IN^2 =3114 PSI

USE 3/4" EMT FOR MAXIMUM LENGTH 5'-2"

A=0.134 IN^2 R=0.309 IN L-MAX=200(O.309)=61.8"
Fa=274#/0.134 IN^2 =2045 PSI

USE 1" EMT FOR MAXIMUM LENGTH 6'-6"

A=0.198 IN^2 R=0.392 IN L-MAX=200(O.392)=78.4"
Fa=274#/0.198 IN^2 =1384 PSI

USE 1 1/2" EMT FOR MAXIMUM LENGTH 8'-6"

A=0.295 IN^2 R=0.511 IN L-MAX=200(O.511)=102.2"
Fa=274#/0.295 IN^2 =929 PSI

USE 1 1/2" EMT FOR MAXIMUM LENGTH 9'-11"

A=0.342 IN^2 R=0.593 IN L-MAX=200(O.593)=118.6"
Fa=274#/0.342 IN^2 =801 PSI

USE 1 5/8"x25 GA MTL STUD FOR MAXIMUM LENGTH 7'-2"

A=0.078 IN^2 R_X =0.430 IN L-MAX=200(O.430)=86.0"
Fa=274#/0.078 IN^2 =3513 PSI

USE DBL 1 5/8"x25 GA SS MTL STUD MAXIMUM LENGTH 16'-10"

A=0.078 IN^2 R_X =0.686 IN L-MAX=200(O.686)=137.2"
Fa=274#/0.078 IN^2 =3513 PSI

USE DBL 2 1/2"x25 GA SS MTL STUD FOR MAXIMUM LENGTH 22'-8"

A=0.094 IN^2 R_X =1.011 IN L-MAX=200(1.011)=202.2"
Fa=274#/0.094 IN^2 =2915 PSI

USE DBL 3 1/2"x25 GA SS MTL STUD FOR MAXIMUM LENGTH 22'-8"

A=0.113 IN^2 R_X=1.359 IN L-MAX=200(1.359)=271.8"
Fa=274#/0.113 IN^2 =2425 PSI

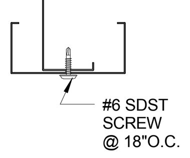

11 COMPRESSION STRUT SCHEDULE

3" = 1'-0"

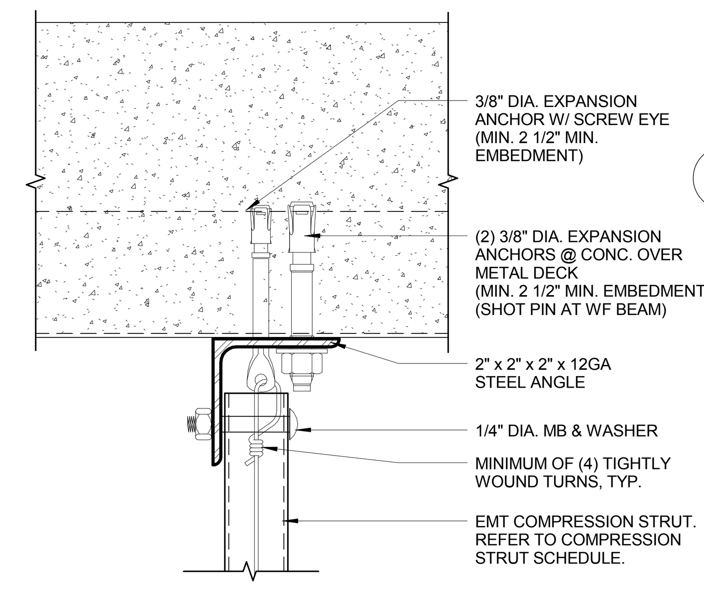

10 EMT STRUT TO ROOF ASSEMBLY

6" = 1'-0"

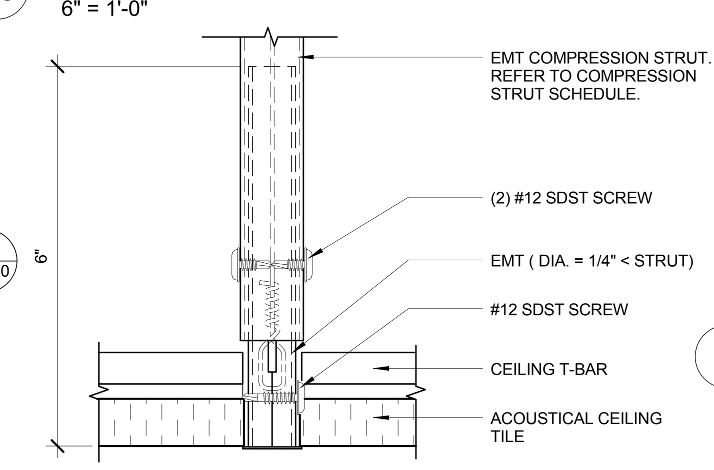

9 EMT COMPRESSION STRUT

6" = 1'-0"

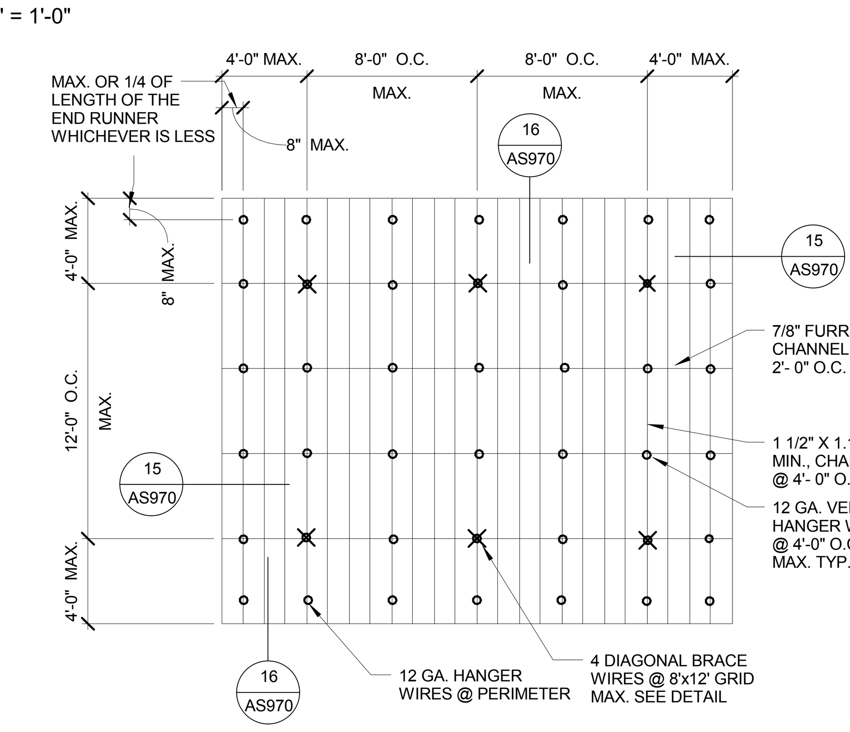

8 SUSPENDED GYP.BOARD CEILING PLAN

12" = 1'-0"

GYPSUM BOARD CEILING SUSPENSION

CONVENTIONAL CONSTRUCTION-ONE LAYER:

A. GENERAL: GYPBOARD SUSPENDED CEILING SYSTEMS SHOULD BE DESIGNED AND CONSTRUCTED IN ACCORDANCE WITH PROVISIONS OF PART 2, TITLE 24, C.C.R., AND THE FOLLOWING INTERPRETATIONS MAY BE USED AS ADDITIONAL GUIDELINES AND DSA IR-25-3.

B. MATERIALS: ARE TO COMPLY WITH APPLICABLE UBC STANDARDS. GYPSUM BOARD IS ONE LAYER OF 1/2" OR 5/8".

C. DESIGN: FOR LATERAL LOAD, USE SAME FACTORS AS FOR LAY-IN ACOUSTICAL TILE CEILING. USE 0.5 X 4#/SQ. FT.=2#/SQ. FT. LATERAL LOAD FOR HOSPITALS.

D. DETAILS OF CONSTRUCTION:
1. GENERAL: GYPBOARD CEILINGS SHOULD NOT SUPPORT MATERIALS OR BUILDING COMPONENTS OTHER THAN GRILLS, LIGHT FIXTURES, SMALL ELECTRICAL CONDUITS, SMALL DUCTS AND THE LIKE. ALL SUCH COMPONENTS SHOULD BE SUPPORTED EITHER DIRECTLY FROM MAIN RUNNERS, OR BY SUPPLEMENTAL FRAMING, WHICH IS SUPPORTED BY MAIN RUNNERS. NO VERTICAL LOADS OTHER THAN GYPBOARD DEAD LOAD SHOULD BE APPLIED TO CROSS-FURRING.

2. VERTICAL SUPPORT SYSTEM:
A. THERE ARE MANY POSSIBLE VARIATIONS OF HANGER AND MAIN RUNNER SIZES AND SPACINGS LISTED IN TABLE NO. 25A, TITLE 24, PART 1 AND PART 2, C.C.R., AND ALL OF THE COMBINATIONS ARE ACCEPTABLE. HOWEVER, BOTH HANGERS AND MAIN RUNNERS ARE MOST FREQUENTLY SPACED AT 4'- 0" O.C. THIS IS ACCEPTABLE PROVIDED THE FOLLOWING REQUIREMENTS ARE MET:

I. VERTICAL HANGER WIRES ARE NO. 8 GAGE AND GALVANIZED; HOWEVER, IF CEILING IS NON-ACCESSIBLE, A NO. 12 GAGE WIRE MAY BE USED.

II. MAIN RUNNERS ARE 1 1/2" CHANNELS, 1.12#/FT. MINIMUM, COLD ROLLED.

III. CROSS-FURRING MAY BE 7/8" , 25 GAGE GALVANIZED HAT SECTIONS AT 24" MAXIMUM O.C.

B. THE FOLLOWING REQUIREMENTS APPLY TO ALL WIRE HANGER/RUNNER COMBINATIONS:

I. HANGERS SHOULD BE SADDLE-TIED AROUND MAIN RUNNERS TO DEVELOP THE FULL STRENGTH OF THE HANGERS.

II. CROSS-FURRING SHOULD BE SADDLE-TIED TO THE MAIN RUNNERS WITH ONE STRAND OF NO. 16 OR TWO STRANDS OF NO. 18 GAGE TIE WIRE.

III. MAIN RUNNERS SHOULD BE SPLICED BY LAPPING AND INTERLOCKING FLANGES 12" MINIMUM AND TYING NEAR EACH END WITH DOUBLE LOOPS OF NO. 16 GAGE WIRE.

IV. CROSS-FURRING SHOULD BE SPLICED BY LAPPING AND INTERLOCKING THE PIECES 8" MINIMUM AND TYPING NEAR EACH END WITH DOUBLE LOOPS OF NO. 16 GAGE WIRE.

E. LIGHT FIXTURE SUPPORT: ALL RECESSED OR DROP-IN LIGHT FIXTURES SHOULD BE SUPPORTED DIRECTLY BY MAIN RUNNERS OR BY SUPPLEMENTAL FRAMING WHICH IS SUPPORTED BY MAIN RUNNERS.

SURFACE MOUNTED FIXTURES SHOULD BE ATTACHED TO A MAIN RUNNER WITH A POSITIVE CLAMPING DEVICE MADE OF MATERIAL WITH A MINIMUM OF 14 GAGE. ROTATIONAL SPRING CATCHES DO NOT COMPLY.

F. LATERAL SYSTEM: SEISMIC BRACE TO CEILING ABOVE AS FOR ACOUSTICAL TILE SUSPENSION SYSTEM. USE #12 DIAGONAL WIRES SPACED ON AN 8' X 12' GRID FOR HOSPITAL AND WITHIN 6'- 0" OF WALLS. SEISMIC BRACE TO BE LOCATED AT INTERSECTION OF MAIN RUNNER AND CROSS-FURRING MEMBER. PROVIDE CONNECTION BETWEEN DIAGONAL WIRES AND MAIN RUNNER SO AS TO PREVENT SLIPPING FOR A 200# APPROXIMATE SEISMIC LOAD.

ALTERNATE SYSTEM-DESIGN AS A DIAPHRAGM, SIMILAR TO PLYWOOD DIAPHRAGM CONCEPT.

DIAPHRAGM RATIOS: HORIZONTAL: 2:1
VERTICAL: 1:1

7 GYP. BOARD SUSPENDED CEILING NOTES

12" = 1'-0"

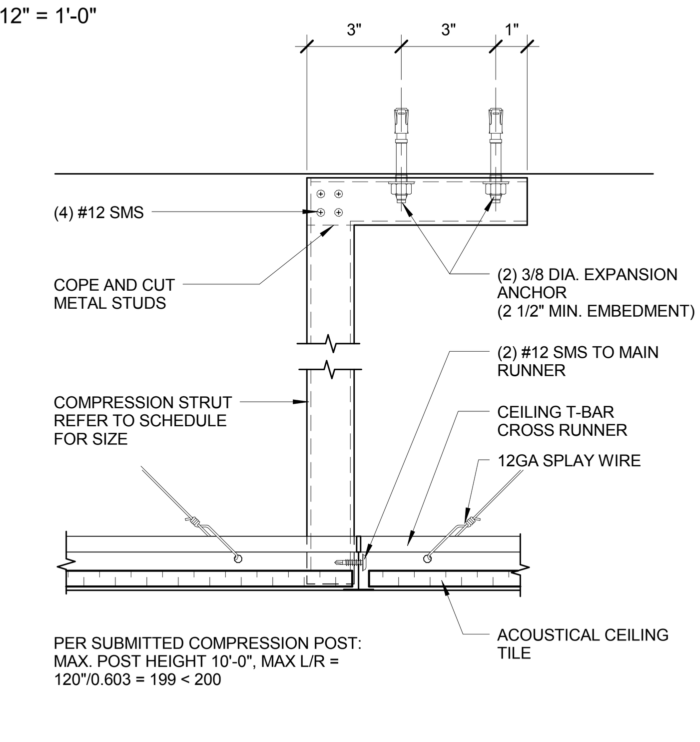

PER SUBMITTED COMPRESSION POST:
MAX. POST HEIGHT 10'-0", MAX L/R = 120"/0.603 = 199 < 200

6 MTL STUD COMPRESSION STRUT ATTACHMENT

3" = 1'-0"

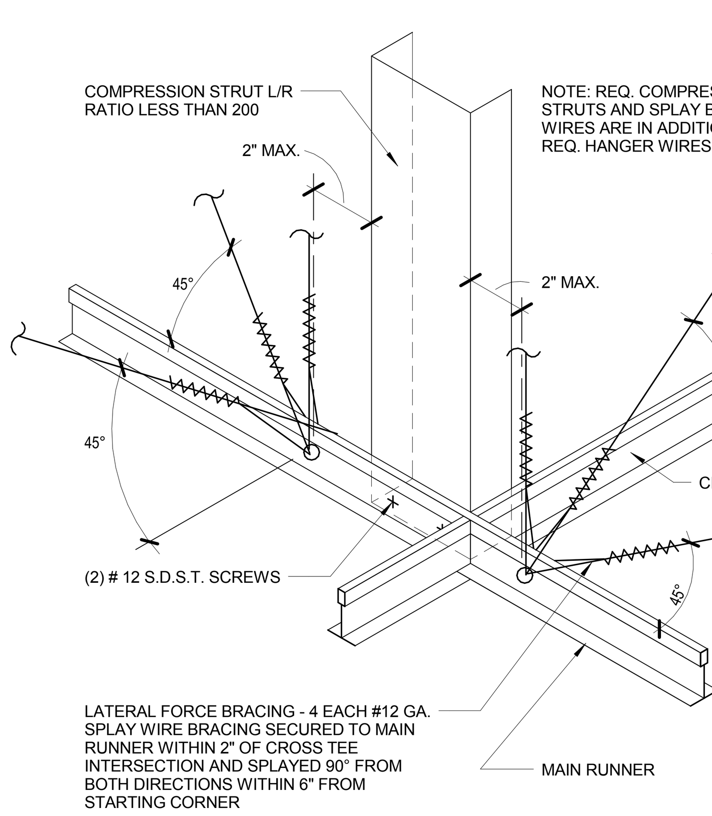

5 METAL STUD COMPRESSION STRUT

3" = 1'-0"

THE TOTAL WEIGHT OF THE CEILING SYSTEM, INCLUDING AIR CONDITIONING GRILLES AND LIGHT FIXTURES, SHALL NOT EXCEED FOUR (4) POUNDS PER SQUARE FOOT.

(1) 12 GAGE MINIMUM (0.106 DIAMETER) CONFORMING TO ASTM A641 HANGER WIRES. WIRES SHALL BE SOFT ANNEALED, GALVANIZED STEEL WIRE WITH A CLASS 1 COATING. HANGER WIRES MAY BE USED FOR UP TO AND INCLUDING 4'-0" X 4'-0" GRID SPACING AND SHALL BE ATTACHED TO MAIN RUNNERS.

(2) PROVIDE 12 GAGE HANGER WIRES AT THE ENDS OF ALL MAIN AND CROSS RUNNERS WITHIN 8" OF THE SUPPORT OR WITHIN 1/4 OF THE LENGTH OF THE END TEE, WHICHEVER IS LEAST, FOR THE PERIMETER OF THE CEILING AREA. PERIMETER WIRES ARE NOT REQUIRED WHEN THE LENGTH OF THE END TEE IS 8" OR LESS.

(3) PROVIDE TRAPEZE OR OTHER SUPPLEMENTARY SUPPORT MEMBERS AT OBSTRUCTIONS TO TYPICAL HANGER SPACING. PROVIDE ADDITIONAL HANGERS, STRUTS OR BRACES AS REQUIRED AT ALL CEILING BREAKS, SOFFITS OR DISCONTINUOUS AREAS. HANGER WIRES THAT ARE MORE THAN 1 (HORIZONTAL) IN 6 (VERTICAL) OUT OF PLUMB ARE TO HAVE COUNTER-SLOPING WIRES.

(4) CEILING GRID MEMBERS MAY BE ATTACHED TO NOT MORE THAN TWO (2) ADJACENT WALLS PER ASCE 7-05, SECTION 13.5.6.2(b). CEILING GRID MEMBERS SHALL BE FREE AND AT LEAST 3/4" CLEAR OF OTHER WALLS. IF WALLS RUN DIAGONALLY TO CEILING GRID SYSTEM RUNNERS, ONE END OF MAIN AND CROSS RUNNERS SHOULD BE FREE AND A MINIMUM OF 3/4" INCH CLEAR OF WALL.

(5) THE WIDTH OF THE PERIMETER SUPPORTING CLOSURE ANGLE SHALL BE NOT LESS THAN 2 INCHES.

(6) AT THE PERIMETER OF THE CEILING AREA WHERE MAIN OR CROSS RUNNERS ARE NOT CONNECTED TO THE ADJACENT WALL, PROVIDE INTERCONNECTION BETWEEN THE RUNNERS AT THE FREE END TO PREVENT LATERAL SPREADING. A METAL STRUT OR A 16 GAGE WIRE WITH A POSITIVE MECHANICAL CONNECTION TO THE RUNNER MAY BE USED. WHERE THE PERPINDICULAR DISTANCE FROM THE WALL TO THE FIRST PARALLEL RUNNER IS 12" OR LESS, THIS INTERLOCK IS NOT REQUIRED.

(7) PROVIDE LATERAL-FORCE BRACING ASSEMBLIES CONSISTING OF A COMPRESSION STRUT AND FOUR (4) 12 GAGE SPLAYED BRACING WIRES ORIENTED 90 DEGREES FROM EACH OTHER AT THE FOLLOWING SPACING:

(A) FOR ESSENTIAL SERVICES BUILDINGS, PLACE BRACING ASSEMBLIES AT A SPACING NOT MORE THAN 8'-0" X 12'-0" ON CENTER.

(B) PROVIDE BRACING ASSEMBLIES AT LOCATIONS NOT MORE THAN ONE HALF (1/2) THE SPACINGS GIVEN ABOVE, FROM EACH PERIMETER WALL AND AT THE EDGE OF VERTICAL CHANGE IN ELEVATION OF CEILING.

(C) THE SLOPE OF THESE WIRES SHALL NOT EXCEED 45 DEGREES FROM THE PLANE OF THE CEILING AND SHALL BE TAUT WITHOUT CAUSING THE CEILING TO LIFT. SPLICES IN BRACING WIRES ARE NOT TO BE PERMITTED.

(D) COMPRESSION STRUS SHALL NOT BE MORE THAN 1 (HORIZONTAL) IN 6 (VERTICAL) OUT OF PLUMB.

(E) SUSPENDED ACOUSTICAL CEILING SYSTEMS WITH A CEILING AREA OF 144 SQUARE FEET OR LESS, AND FIRE RATED SUSPENDED ACOUSTICAL CEILING SYSTEMS WITH A CEILING AREA OF 96 SQUARE FEET OR LESS, SURROUNDED BY WALLS WHICH CONNECT DIRECTLY TO THE STRUCTURE ABOVE, DO NOT REQUIRE BRACING ASSEMBLIES WHEN ATTACHED TO TWO (2) ADJACENT WALLS.

(8) PENETRATIONS GHROUGH THE CEILING FOR SPRINKLER HEADS AND OTHER SIMILAR DEVICES THAT ARE NOT ITEGRALLY TIED TO THE CEILING SYSTEM IN THE LATERAL DIRECTION SHALL HAVE A TWO (2) INCH OVERSIZED RING, SLEEVE OR ADAPTER THROUGH THE CEILING TILE TO ALLOW FREE MOVEMENT OF ONE (1) INCH IN ALL HORIZONTAL DIRECTIONS.

(9) FASTEN #12 HANGER WIRES WITH NOT LESS THAN THREE (3) TIGHT TURNS. FASTEN #10 OR #12 BRACING WIRES WITH NOT LESS THAN FOUR (4) TIGHT TURNS. MAKE ALL TIGHT TURNS WITHIN A DISTANCE OF 1-1/2". HANGER OR BRACING WIRE ANCHORS TO THE STRUCTURE SHOULD BE INSTALLED IN SUCH A MANNER THAT THE DIRECTION OF THE ANCHORS ALIGNS AS CLOSELY AS POSSIBLE WITH THE DIRECTION OF THE WIRE.

NOTE: WIRE TURNS MADE BY MACHINE WHERE BOTH STRANDS HAVE BEEN DEFORMED OR BENT IN WRAPPING CAN WAIVE THE 1-1/2" REQUIREMENT, BUT THE NUMBER OF TURNS SHOULD BE MAINTAINED, AND BE AS TIGHT AS POSSIBLE.

(10) SEPARATE ALL CEILING HANGING AND BRACING WIRES AT LEAST 6" FROM ALL UNBRACED DUCTS, PIPES, CONDUIT, ETC.

(11) ATTACH ALL LIGHT FIXTURES AND CEILING MOUNTED AIR TERMINALS OR SERVICES, TO THE CEILING GRID RUNNERS TO RESIST A HORIZONTAL FORCE EQUAL TO THE WEIGHT OF THE FIXTURES. SCREWS OR APPROVED FASTENERS ARE REQUIRED.

(12) FLUSH OR RECESSED LIGHT FIXTURES, WEIGHING LESS THAN 56 LBS. AND AIR TERMINALS OR SERVICES, WEIGHING LESS THAN 20 POUNDS, MAY BE SUPPORTED DIRECTLY ON THE RUNNERS OF A HEAVY DUTY GRID SYSTEM BUT, IN ADDITION, THEY MUST HAVE A MINIMUM OF TWO (2) 12 GAGE SLACK SAFETY WIRES ATTACHED TO THE FIXTURE AT DIAGONAL CORNERS AND ANCHORED TO THE STRUCTURE ABOVE. ALL 4'-0" X 4'-0" LIGHT FIXTURES MUST HAVE SLACK SAFETY WIRES AT EACH CORNER. ALL FLUSH OR RECESSED LIGHT FIXTURES WEIGHING 56 LBS OR AIR TERMINALS OR SERVICES WEIGHING 20 POUNDS OR MORE MUST BE INDEPENDENTLY SUPPORTED BY NOT LESS THAN FOUR (4) TAUT 12 GAGE WIRES, EACH ATTACHED TO THE FIXTURE AND TO THE STRUCTURE ABOVE REGARDLESS OF THE TYPE OF CEILING GRID SYSTEM USED. THE FOUR (4) TAUT 12 GAGE WIRES INCLUDING THEIR ATTACHMENT TO THE STRUCTURE ABOVE MUST BE CAPABLE OF SUPPORTING FOUR (4) TIMES THE WEIGHT OF THE UNIT.

(13) SUPPORT SURFACE MOUNTED LIGHT FIXTURES BY AT LEAST TWO (2) POSITIVE DEVICES WHICH SURROUND THE CEILING RUNNER AND WHICH ARE EACH SUPPORTED FROM THE STRUCTURE ABOVE BY A 12 GAGE WIRE. SPRING CLIPS OR CLAMPS THAT CONNECT ONLY TO THE RUNNER ARE NOT ACCEPTABLE. PROVIDE ADDITIONAL SUPPORTS WHEN LIGHT FIXTURES ARE 8'-0" OR LONGER. MAXIMUM SPACING BETWEEN SUPPORTS SHALL NOT EXCEED 8 FEET.

(14) SUPPORT PENDANT MOUNTED LIGHT FIXTURES DIRECTLY FROM THE STRUCTURE ABOVE WITH HANGER WIRES OR CABLES PASSING THROUGH EACH PENDANT HANGER AND CAPABLE OF SUPPORTING TWO (2) TIMES THE WEIGHT OF THE FIXTURE. A BRACING ASSEMBLY, CONSISTING OF A COMPRESSION STRUT AND FOUR (4) 12 GAGE SPLAYED BRACING WIRES ORIENTED 90 DEGREES FROM EACH OTHER, IS REQUIRED WHERE THE PENDANT HANGER PENETRATES THE CEILING. SPECIAL DETAILS ARE REQUIRED TO ATTACH THE PENDANT HANGER TO THE BRACING ASSEMBLY TO TRANSMIT HORIZONTAL FORCES.

(15) CEILING GRID SYSTEM DESIGN BASED ON ARMSTRONG PRELUDE XL SYSTEM, ICC-ES ESR-1308. MAIN RUNNER SPLICES AND CROSS RUNNER INTERSECTIONS SHALL BE MECHANICAL INTERLOCKING CONNECTIONS. CLASSIFICATION OF CEILING GRID SYSTEM IS HEAVY DUTY (16 LBS./LIN. FT. MIN.).

MANUFACTURER'S CATALOG NUMBERS:
MAIN RUNNER - XL7301
CROSS RUNNER (4'-0") - XL7341
CROSS RUNNER (2'-0") - XL7128

(16) PRIOR TO THE INSTALLATION OF MECHANICAL, PLUMBING, ELECTRICAL AND OTHER EQUIPMENT SHARING INTERSTITIAL OR ATTIC SPACE, THE GENERAL CONTRACTOR SHALL COORDINATE HIS WORK AND THE WORK OF ALL SUBCONTRACTORS USING THIS SPACE FOR THE INSTALLATION OF EQUIPMENT AND OTHER BUILDING COMPONENTS TO INSURE ALL COMPONENTS FIT IN THE SPACE AVAILABLE.

(17) ALL SUSPENDED LAY-IN ACOUSTICAL TILE CEILING GRID SYSTEMS SHALL BE CENTERED IN SPACES AS SHOWN UNLESS NOTED OTHERWISE BY DIMENSION.

(18) MECHANICAL GRILLES AND LIGHT FIXTURES ARE SHOWN FOR LOCATION ONLY. SEE MECHANICAL AND ELECTRICAL DRAWINGS AND SPECIFICATIONS FOR TYPES AND SIZES.

(19) ALL REQUIRED ACCESS PANELS MAY NOT BE SHOWN ON THE ARCHITECTURAL CEILING PLANS. PROVIDE ACCESS PANELS AT HARD CEILINGS WHERE REQUIRED TO ACCESS CONCEALED FIRE DAMPERS, PLUMBING CONTROLS, MECHANICAL CONTROLS, ELECTRICAL BOXES AND OTHER EQUIPMENT. THE CONTRACTOR SHALL COORDINATE THE QUANTITY, SIZE AND LOCATION OF REQUIRED ACCESS PANELS WITH ALL SUBCONTRACTORS.

(20) SMOKE DETECTOR LOCATIONS (WHERE REQUIRED) SHALL BE COORDINATED WITH THE ARCHITECT.

4 GENERAL LAY-IN CEILING NOTES

12" = 1'-0"

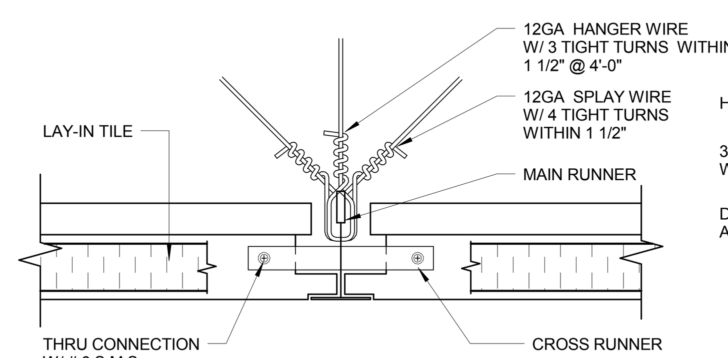

3 BRACING AT TEE INTERSECTION

6" = 1'-0"

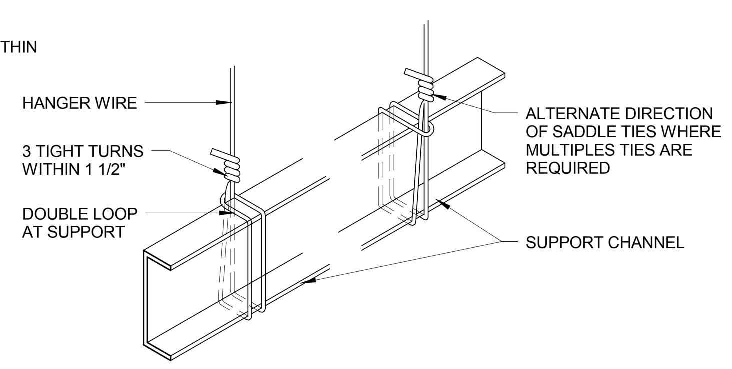

2 SADDLE TIE AT SUPPORT CHANNEL

6" = 1'-0"

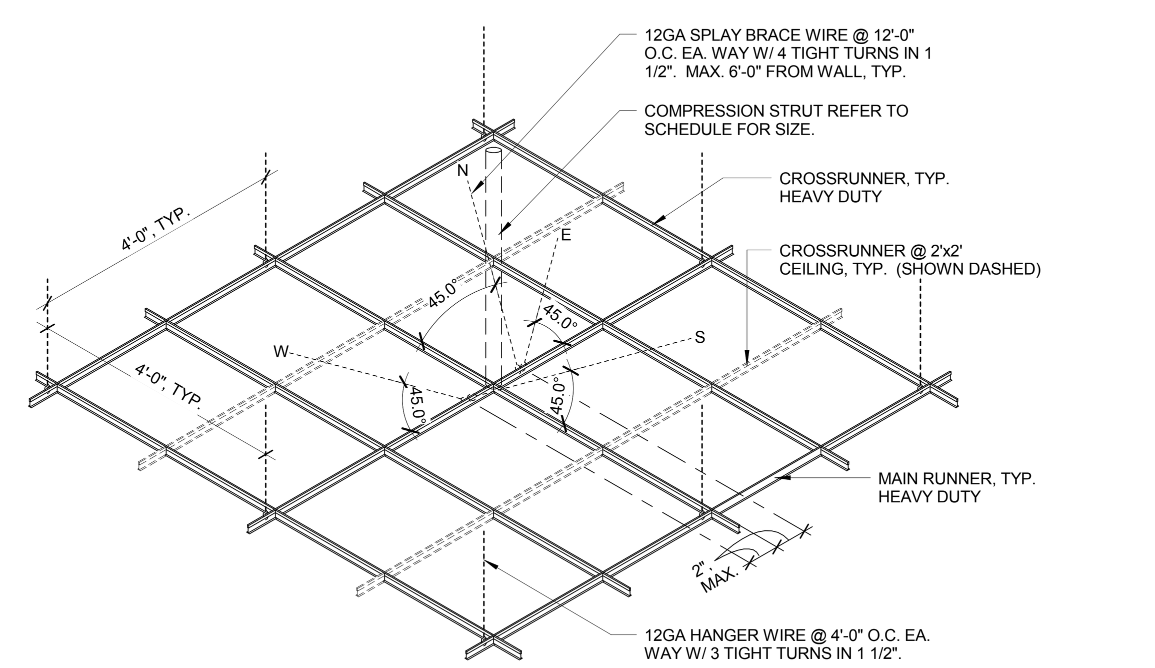

NOTE:
COMPRESSION STRUTS: STEEL SECTION WITH L/R RAITION OF 200 MAX. STARING NOT MORE THAN 4'-0" FROM ADJACENT WALLS TO SUPPORT A TRIBUTARY AREA OF 144 S.F.

SEE DETAIL FOR ATTACHMENT TO STRUCTURE AND MAIN RUNNER.

COMPRESSION STRUT SHALL NOT REPLACE HANGER WIRE.
REFER TO TO DETAIL FOR SPLAY WIRE ATTACHMENT.

1 T-BAR CEILING SPLAY WIRE

1/2" = 1'-0"

CONSULTANTS:

ARCHITECT/ENGINEERS:

HMC Architects
1827 E. Fir Avenue / Studio 103 / Fresno, CA 93720
T 559 322 2444/ www.hmcarchitects.com
HMC PROJECT #1393002-000

LICENSED ARCHITECT FORREST T. McMILLEN NO. C-22235 REN. 08-31-2015 STATE OF CALIFORNIA

Drawing Title	Project Title	Project Number
TYPICAL CEILING DETAILS	Mental Health Psychosocial Rehab Recovery and Health Care for Homeless Veteran Center	570-217
		Building Number 37
Approved: Project Director	Location 2615 E. CLINTON AVE, FRESNO, CA 93703	Drawing Number AS970
	Date 08/11/2014 · Checked WB, GV · Drawn MB, CLO, LS	Dwg. 73 of 197

Office of Construction and Facilities Management:

Department of Veterans Affairs