NOTES:
1. CLIP BEAM FLANGE(S) WHERE REQUIRED TO CLEAR ADJACENT BEAM FLANGES AT MULTI-BEAM CONNECTIONS.
2. KNIFE PLATE SLOT WIDTH = KNIFE PLATE THICKNESS + 1/8"
3. PJP WELDS ARE REQUIRED ALL AROUND COLUMN AT SPLICE LOCATIONS. LEAVE 1/16" OF COLUMN WALL THICKNESS AT INTERIOR FACE FOR PJP WELD.

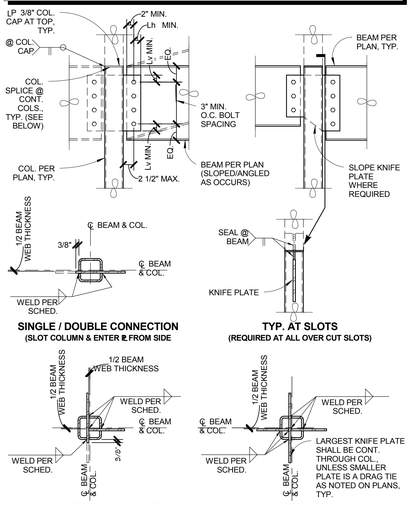

SINGLE / DOUBLE CONNECTION
(SLOT COLUMN & ENTER ℄ FROM SIDE)

TYP. AT SLOTS
(REQUIRED AT ALL OVER CUT SLOTS)

DOUBLE / TRIPLE CONNECTION
(CUT COLUMN & ENTER ℄ FROM ABOVE)

QUAD CONNECTION
(CUT COLUMN & ENTER ℄ FROM ABOVE)

CONNECTION SCHEDULE

BEAM SIZE	PLATE	FILLET WELD SIZE	BOLTS			DIMENSIONS	
			NO.	SIZE	TYPE	Lh	Lv
W8x / C8x	3/8	1/4	(2)	3/4"Ø	A325N	1 1/2"	1 1/2"
W10x / C10x	3/8	1/4	(2)	3/4"Ø	A325N	1 1/2"	1 1/2"
W12x / C12x	3/8	1/4	(3)	3/4"Ø	A325N	1 1/2"	1 1/2"
W14x / C15x	3/8	1/4	(3)	3/4"Ø	A325N	1 1/2"	1 1/2"
W16x	3/8	1/4	(4)	3/4"Ø	A325N	1 1/2"	1 1/2"
W18x	3/8	1/4	(4)	1"Ø	A325N	2"	2"
W21x	1/2	5/16	(5)	1"Ø	A325N	2"	2"
W24x	1/2	5/16	(6)	1"Ø	A325N	2"	2"
W27x	1/2	5/16	(7)	1"Ø	A325N	2"	2"

D1 KNIFE PLATE CONNECT. SCHED.
SS106 NOT TO SCALE

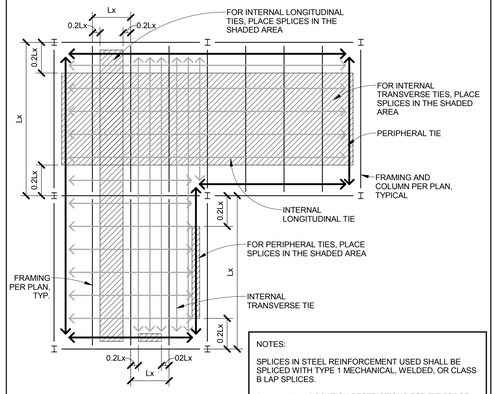

NOTES:

SPLICES IN STEEL REINFORCEMENT USED SHALL BE SPLICED WITH TYPE 1 MECHANICAL, WELDED, OR CLASS B LAP SPLICES.

SEE TYPICAL **LOCATION RESTRICTIONS FOR TIE FORCE REINFORCEMENT** DETAIL FOR ADDITIONAL INFORMATION.

B2 SPLICE LOCATIONS FOR TIE FORCE REINF.
SS106 NOT TO SCALE

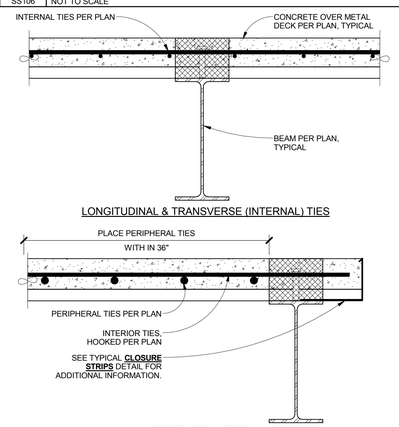

LONGITUDINAL & TRANSVERSE (INTERNAL) TIES

PERIPHERAL TIES

NOTE:
TIES PARALLEL TO FRAMING MEMBERS NOT PERMITTED ABOVE FRAMING MEMBERS (CROSS HATCH REGION)

D2 LOCATION RESTRICTIONS FOR TIE FORCE REINF.
SS106 NOT TO SCALE

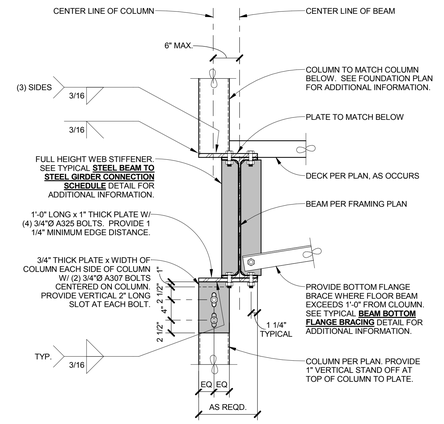

B4 ELEVATOR GUIDE RAIL TO STEEL BEAM
SS106 NOT TO SCALE

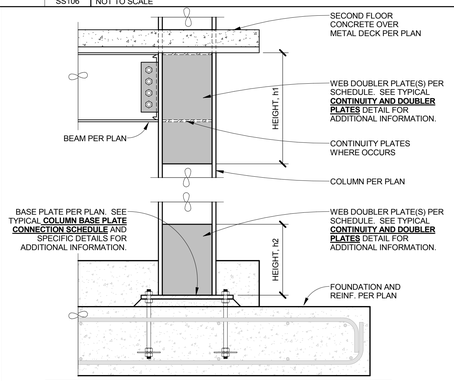

WEB DOUBLER SCHEDULE

COLUMN	THICKNESS	HEIGHT, h1	HEIGHT, h2	No. SIDES
W10x39	1/4"	18"	N.A.	ONE
W10x49	1/4"	32"	N.A.	ONE
W14x68	1/2"	36"	36"	ONE
W14x82	5/8"	36"	36"	ONE

D4 ENCHANCED LOCAL RESISTANCE
SS106 NOT TO SCALE

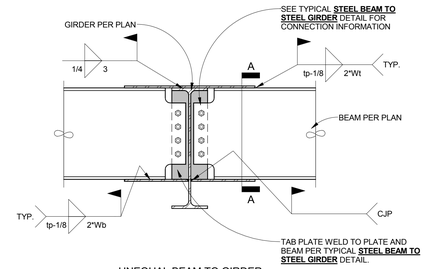

UNEQUAL BEAM TO GIRDER

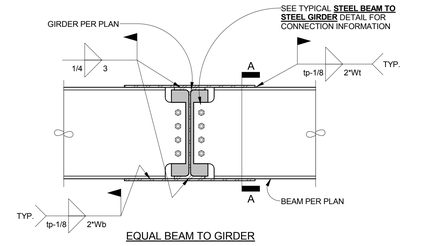

EQUAL BEAM TO GIRDER

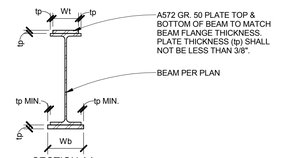

SECTION AA

D6 GRAVITY MOMENT CONNECTION
SS106 NOT TO SCALE

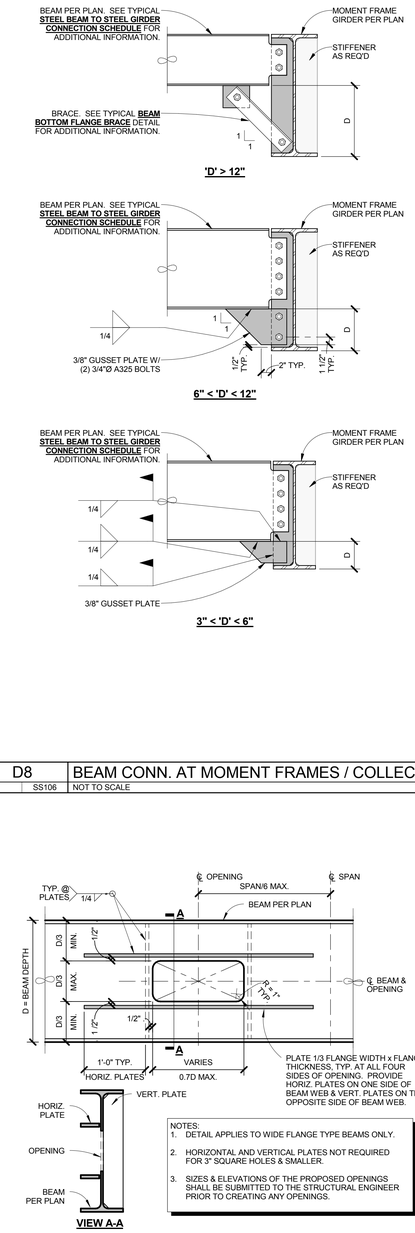

D8 BEAM CONN. AT MOMENT FRAMES / COLLECTORS
SS106 NOT TO SCALE

F1 NOT USED
NOT TO SCALE

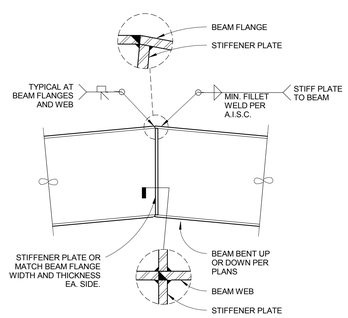

F2 BENT BEAM SPLICE
SS106 NOT TO SCALE

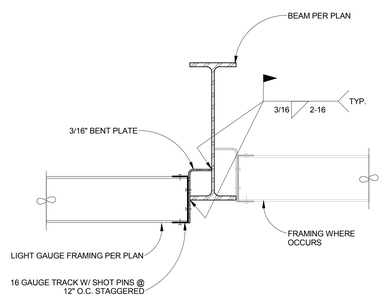

F4 CEILING FRAMING AT BEAM
SS106 NOT TO SCALE

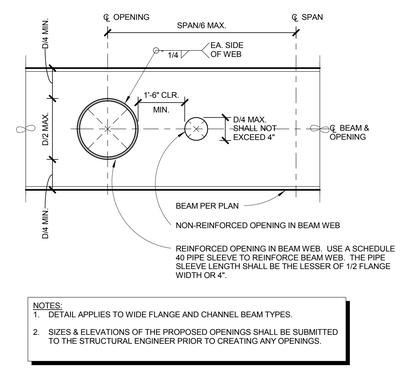

NOTES:
1. DETAIL APPLIES TO WIDE FLANGE AND CHANNEL BEAM TYPES.
2. SIZES & ELEVATIONS OF THE PROPOSED OPENINGS SHALL BE SUBMITTED TO THE STRUCTURAL ENGINEER PRIOR TO CREATING ANY OPENINGS.

F6 ROUND BEAM WEB OPENINGS
SS106 NOT TO SCALE

NOTES:
1. DETAIL APPLIES TO WIDE FLANGE TYPE BEAMS ONLY.
2. HORIZONTAL AND VERTICAL PLATES NOT REQUIRED FOR 3" SQUARE HOLES & SMALLER.
3. SIZES & ELEVATIONS OF THE PROPOSED OPENINGS SHALL BE SUBMITTED TO THE STRUCTURAL ENGINEER PRIOR TO CREATING ANY OPENINGS.

F8 RECTANGULAR BEAM WEB OPENINGS
SS106 NOT TO SCALE

CONSULTANTS:

BROOKS-RANSOM ASSOCIATES
STRUCTURAL ENGINEERS CIVIL ENGINEERS
WWW.BROOKSRANSOM.COM
7415 N. PALM AVE., SUITE 100
FRESNO, CALIFORNIA 93711
PHONE: 559-449-8404 FAX: 559-449-8404

11008.02

REGISTERED PROFESSIONAL ENGINEER GAYLORD R. RANSOM NO. S2386 EXPIRES 3-31-16 CIVIL STATE OF CALIFORNIA

ARCHITECT/ENGINEERS:

HMC Architects
1827 E. Fir Avenue / Studio 103 / Fresno, CA 93720
T 559 322 2444/ www.hmcarchitects.com
HMC PROJECT #1393002-000

Drawing Title	TYPICAL STEEL NOTES AND DETAILS
Approved: Project Director	
Project Title	Mental Health Psychosocial Rehab Recovery and Health Care for Homeless Veteran Center
Location	2615 E. CLINTON AVE, FRESNO, CA 93703
Date	08/11/2014
Checked	AL
Drawn	ESB
Project Number	570-217
Building Number	37
Drawing Number	SS106
Dwg. 87 of 197	

Office of Construction and Facilities Management:

Department of Veterans Affairs