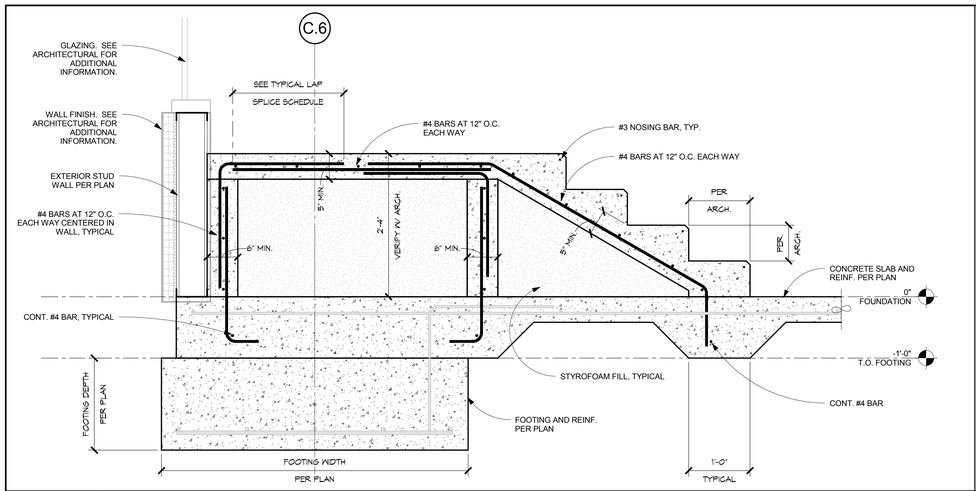

B1 DETAIL
SB201 SS501 1" = 1'-0"

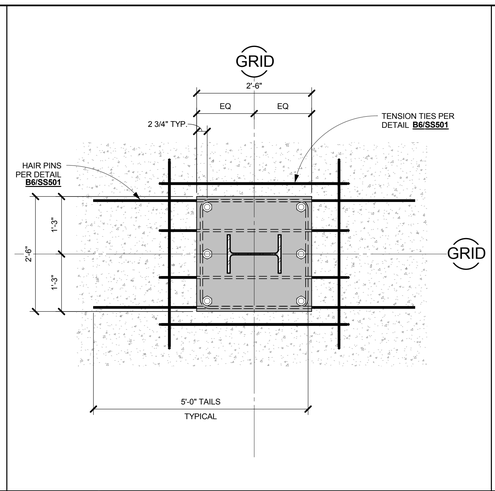

B4 DETAIL
SS501 SS501 3/4" = 1'-0"

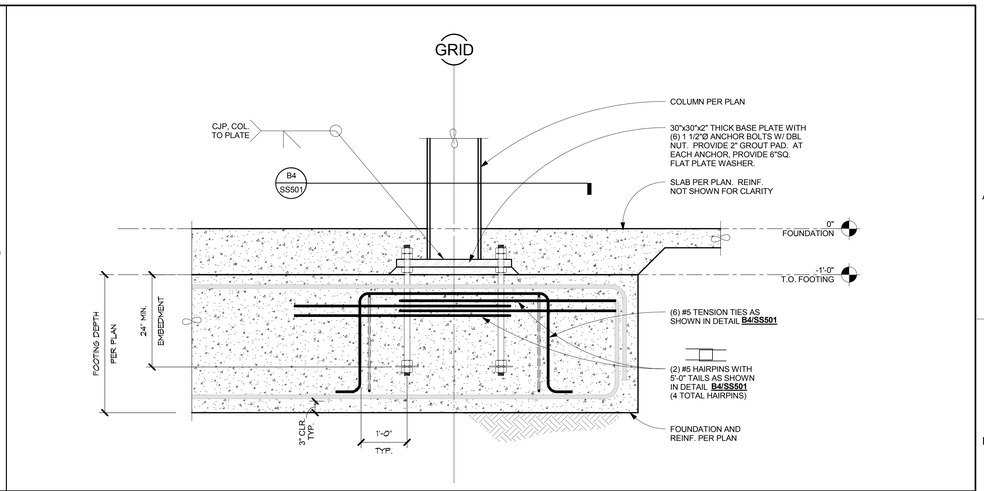

B6 DETAIL
SS401 SS501 3/4" = 1'-0"

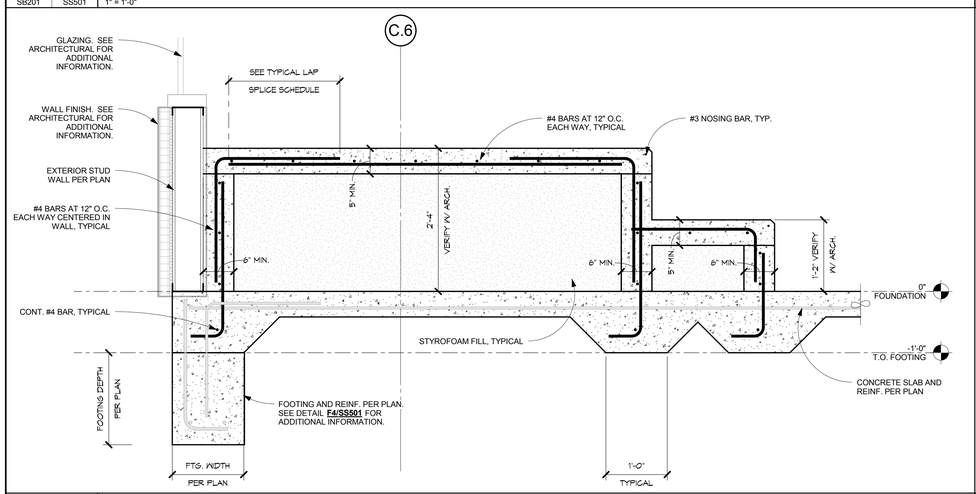

D1 DETAIL
SB201 SS501 1" = 1'-0"

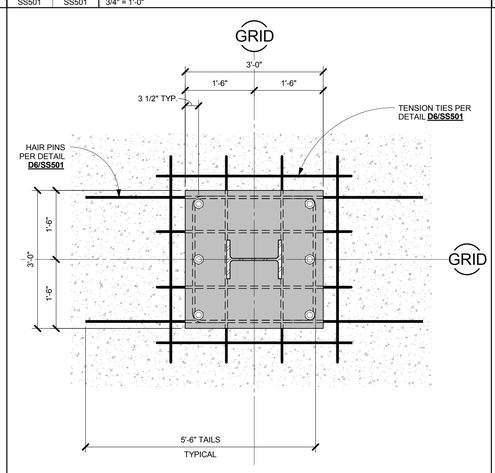

D4 DETAIL
SS501 SS501 3/4" = 1'-0"

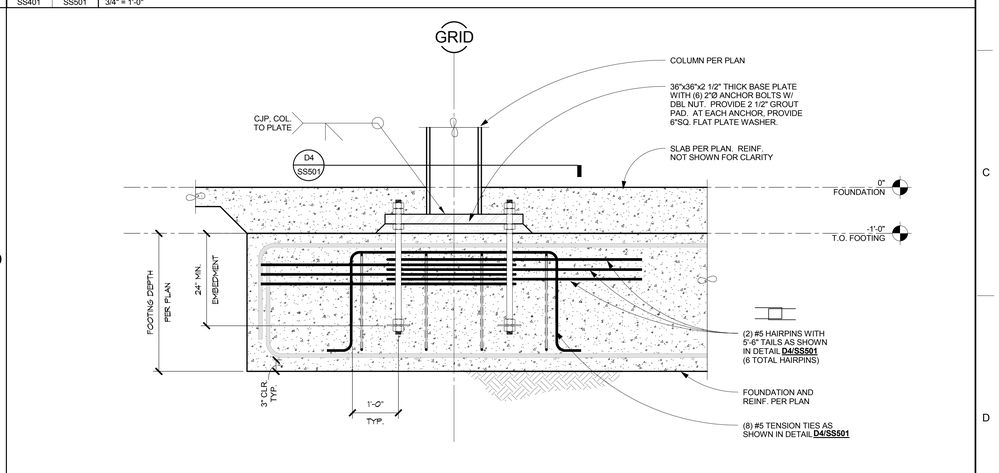

D6 DETAIL
SS401 SS501 3/4" = 1'-0"

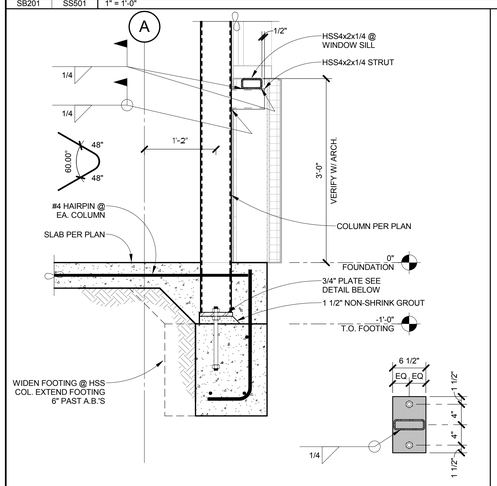

F1 DETAIL
SB201 SS501 1" = 1'-0"

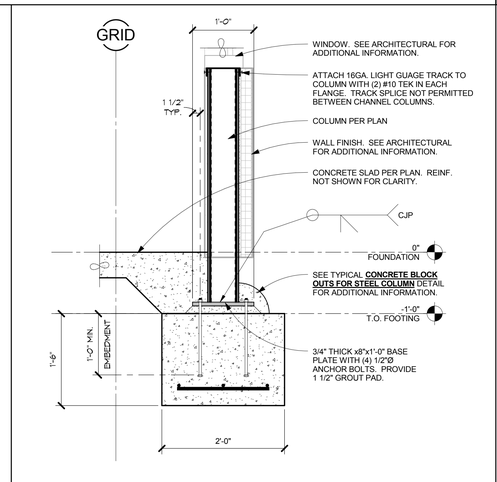

F2 DETAIL
SB201 SS501 1" = 1'-0"

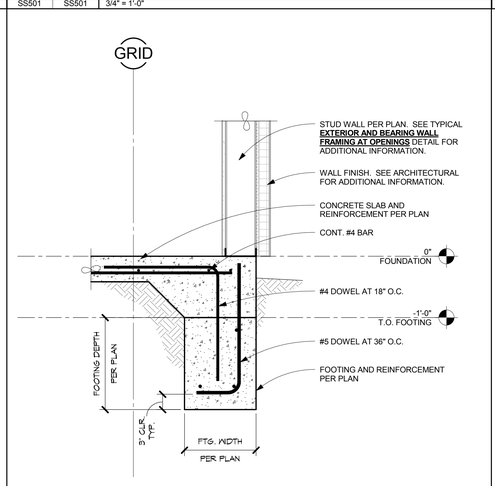

F4 DETAIL
SB201 SS501 1" = 1'-0"

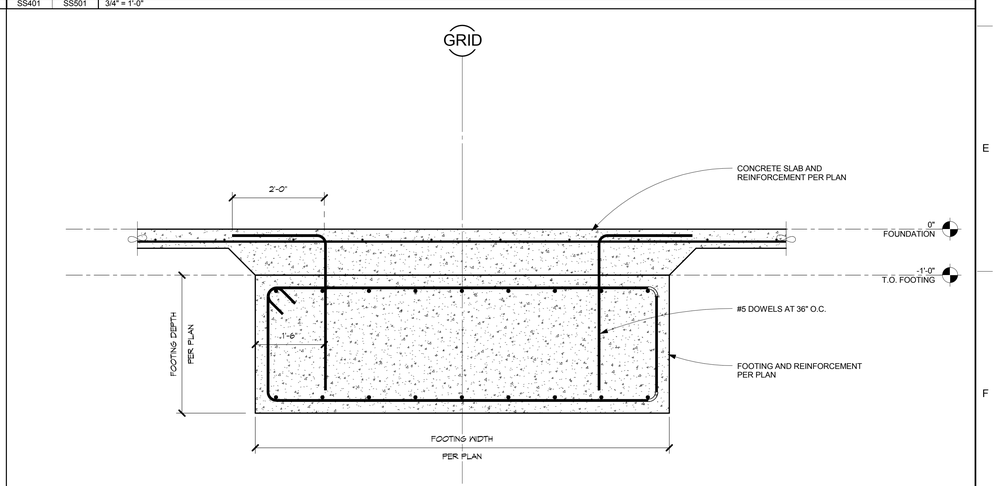

F6 DETAIL
SB201 SS501 3/4" = 1'-0"

CONSULTANTS:

BROOKS-RANSOM ASSOCIATES
STRUCTURAL ENGINEERS CIVIL ENGINEERS
WWW.BROOKSRANSOM.COM
7415 N. PALM AVE., SUITE 100
FRESNO, CALIFORNIA 93711
PHONE: 559-449-84404 FAX: 559-449-8404
11008.02

REGISTERED PROFESSIONAL ENGINEER GAYLORD R. RANSOM NO.S2386 EXPIRES 3-31-16 STRUCTURAL CALIFORNIA

ARCHITECT/ENGINEERS:

HMC Architects
1827 E. Fir Avenue / Studio 103 / Fresno, CA 93720
T 559 322 2444/ www.hmcarchitects.com
HMC PROJECT #1393002-000

Drawing Title	FOUNDATION DETAILS
Approved: Project Director	
Project Title	Mental Health Psychosocial Rehab Recovery and Health Care for Homeless Veteran Center
Location	2615 E. CLINTON AVE, FRESNO, CA 93703
Date	08/11/2014
Checked	Checker
Drawn	Author
Project Number	570-217
Building Number	37
Drawing Number	SS501
Dwg.	110 of 197

Office of Construction and Facilities Management:
Department of Veterans Affairs