B1	NOT USED
	NOT TO SCALE

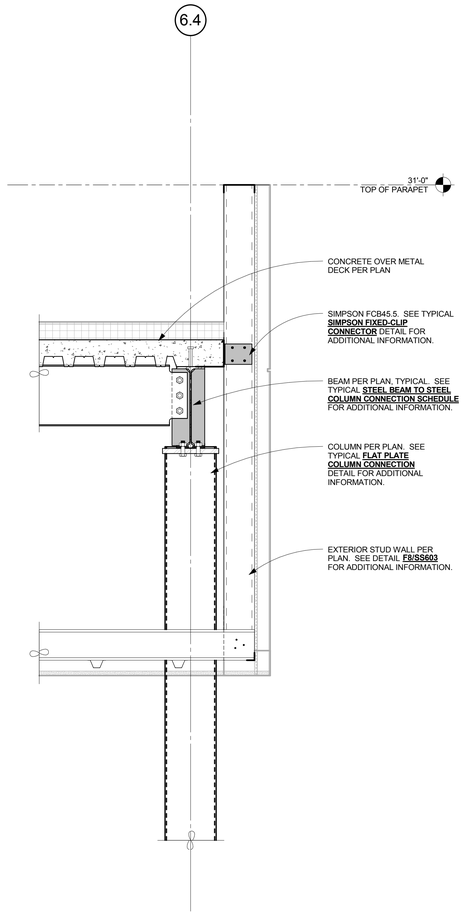

D1	NOT USED	D2	DETAIL
	NOT TO SCALE	SS604 SS604	1" = 1'-0"

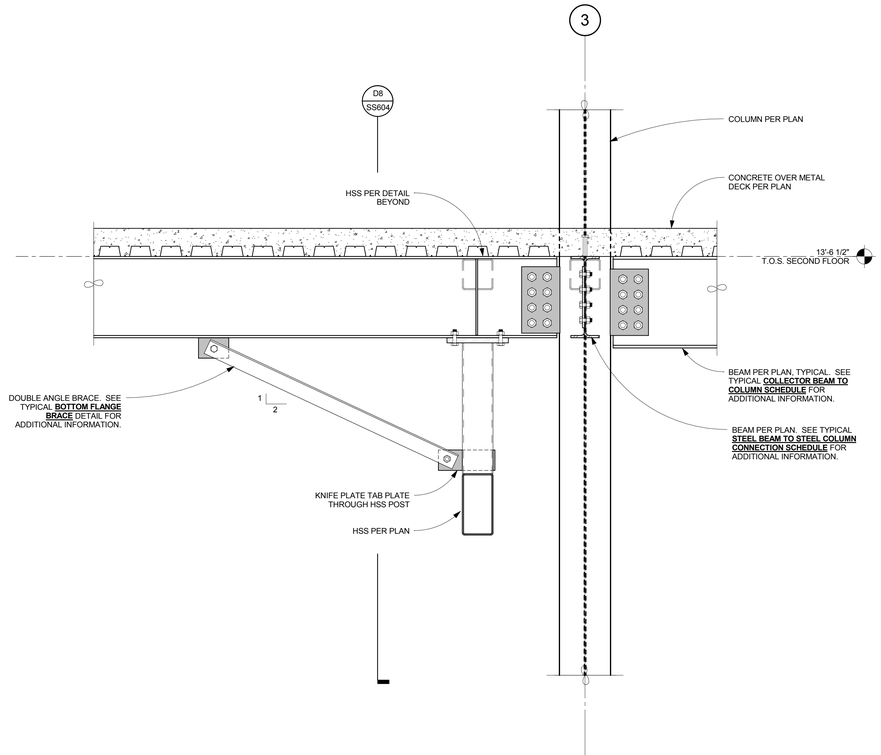

D4	Detail 106	D8	DETAIL
SS604 SS604	1" = 1'-0"	SF304 SS604	1" = 1'-0"

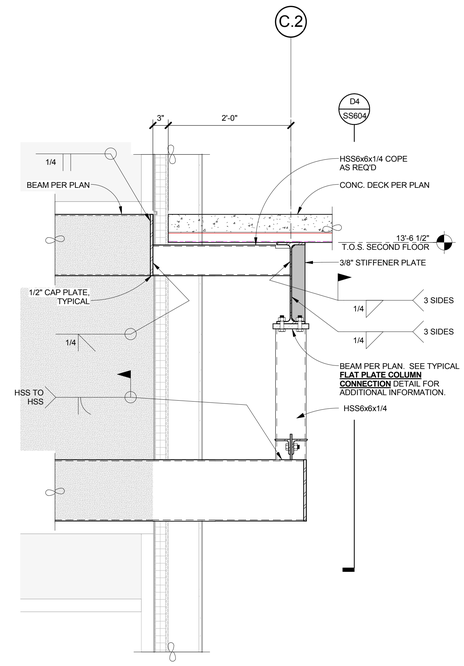

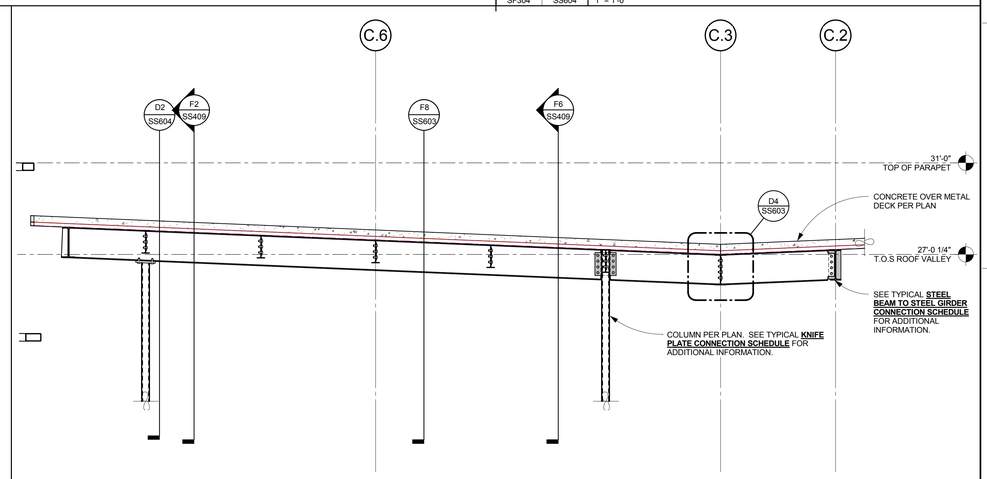

F1	NOT USED	F2	NOT USED	F4	NOT USED
	NOT TO SCALE		NOT TO SCALE		NOT TO SCALE

F6	DETAIL
SF305 SS604	3/8" = 1'-0"

CONSULTANTS:

BROOKS-RANSOM ASSOCIATES
STRUCTURAL ENGINEERS CIVIL ENGINEERS
WWW.BROOKSRANSOM.COM
7415 N. PALM AVE., SUITE 100
FRESNO, CALIFORNIA 93711
PHONE: 559-449-84404 FAX: 559-449-8404

11008.02

REGISTERED PROFESSIONAL ENGINEER GAYLORD R. RANSOM NO. S2386 EXPIRES 3-31-16 CIVIL STATE OF CALIFORNIA

ARCHITECT/ENGINEERS:

HMC Architects
1827 E. Fir Avenue / Studio 103 / Fresno, CA 93720
T 559 322 2444/ www.hmcarchitects.com
HMC PROJECT #1393002-000

Drawing Title: FRAMING DETAILS DEDUCTIVE ALTERNATE #17	Project Title: Mental Health Psychosocial Rehab Recovery and Health Care for Homeless Veteran Center	Project Number: 570-217	Office of Construction and Facilities Management:
Approved: Project Director	Location: 2615 E. CLINTON AVE, FRESNO, CA 93703	Building Number: 37	
	Date: 08/11/2014 / Checked: Checker / Drawn: Author	Drawing Number: SS604	Department of Veterans Affairs