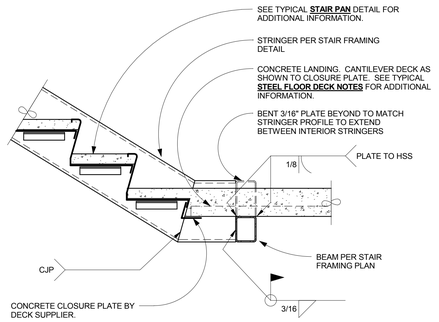

B1	STRINGER TO LANDING
SS702	NOT TO SCALE

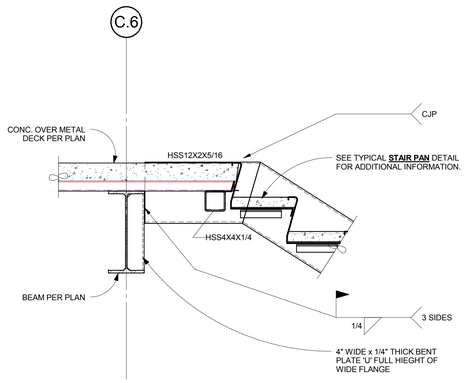

D1	DETAIL	
SS702	SS702	1" = 1'-0"

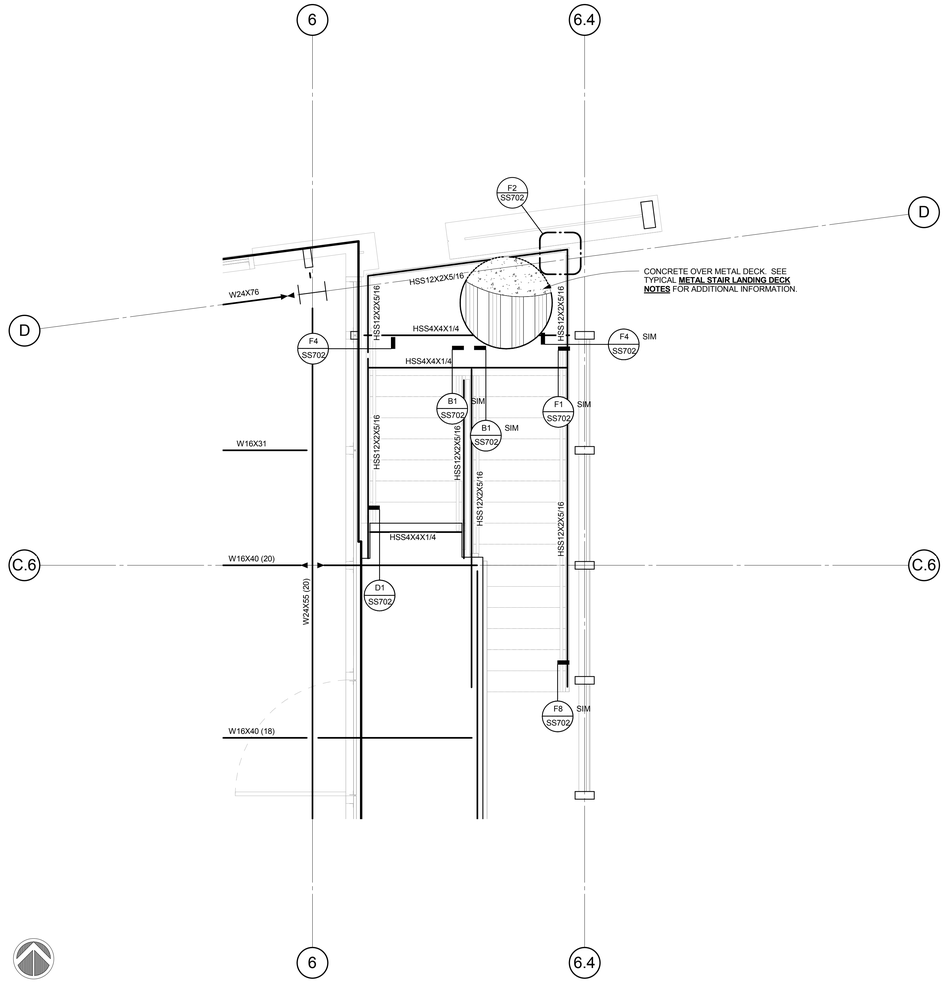

D2	STAIR 2 FRAMING PLAN	
SS401	SS702	3/8" = 1'-0"

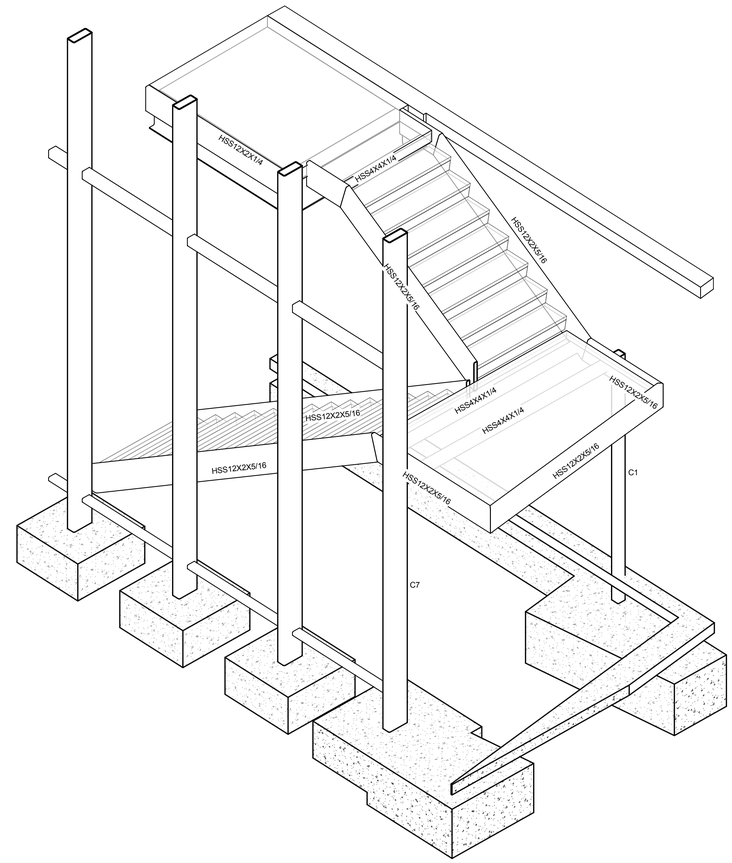

D6	STAIR 2 - 3D VIEW
SS702	

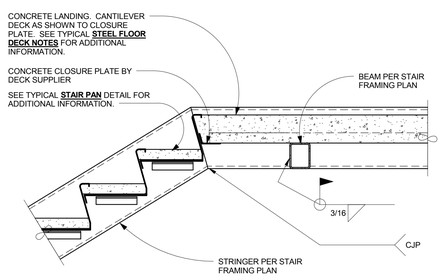

F1	CONTINUOUS STRINGER TO LANDING	
SS702	NOT TO SCALE	

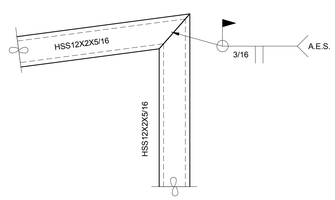

F2	DETAIL	
SS702	SS702	3" = 1'-0"

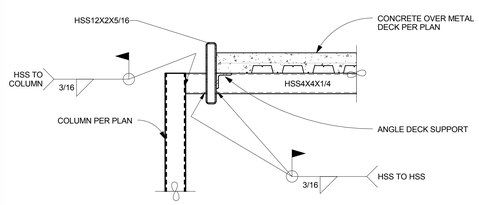

F4	DETAIL	
SS701	SS702	1" = 1'-0"

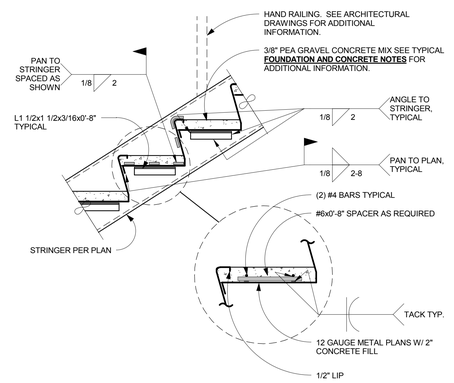

F6	STAIR PAN
SS702	NOT TO SCALE

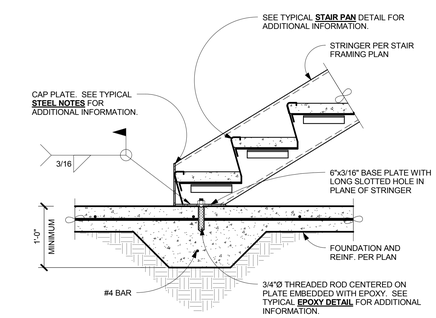

F8	STRINGER TO FOUNDATION
SS702	NOT TO SCALE

CONSULTANTS:

BROOKS-RANSOM ASSOCIATES
STRUCTURAL ENGINEERS CIVIL ENGINEERS
WWW.BROOKSRANSOM.COM
7415 N. PALM AVE., SUITE 100
FRESNO, CALIFORNIA 93711
PHONE: 559-449-8440 FAX: 559-449-8404

11008.02

REGISTERED PROFESSIONAL ENGINEER
GAYLORD R. RANSOM
NO. S2386
EXPIRES 3-31-16
STRUCTURAL
STATE OF CALIFORNIA

ARCHITECT/ENGINEERS:

HMC Architects
1827 E. Fir Avenue / Studio 103 / Fresno, CA 93720
T 559 322 2444/ www.hmcarchitects.com
HMC PROJECT #1393002-000

Drawing Title	Project Title	Project Number
STAIR 2 FRAMING PLAN & DETAILS	Mental Health Psychosocial Rehab Recovery and Health Care for Homeless Veteran Center	570-217
Approved: Project Director	Location: 2615 E. CLINTON AVE, FRESNO, CA 93703	Building Number: 37
	Date: 08/11/2014 · Checked: Checker · Drawn: Author	Drawing Number: SS702
		Dwg. 118 of 197

Office of Construction and Facilities Management:

Department of Veterans Affairs