GENERAL NOTES

APPLICABLE TO ALL DRAWINGS UNLESS NOTED OR SHOWN OTHERWISE

GENERAL NOTES

1005N001-1

1. INTERPRETATION OF DRAWINGS & SPECIFICATIONS
   A. WHERE SPECIFICATIONS HAVE BEEN PREPARED FOR THIS PROJECT, THEY ARE ARRANGED IN SEVERAL SECTIONS, BUT SUCH SEPARATION SHALL NOT BE CONSIDERED AS THE LIMITS OF THE WORK REQUIRED OF ANY SEPARATE TRADE. THE TERMS AND CONDITIONS OF SUCH LIMITATIONS ARE WHOLLY BETWEEN THE CONTRACTOR AND HIS SUBCONTRACTORS.
   B. IN GENERAL, THE WORKING DETAILS WILL INDICATE DIMENSIONS, POSITION AND KIND OF CONSTRUCTION, AND THE SPECIFICATIONS, QUALITIES AND METHODS. ANY WORK INDICATED ON THE WORKING DETAILS AND NOT MENTIONED IN THE SPECIFICATIONS, OR VICE VERSA, SHALL BE FURNISHED AS THOUGH FULLY SET FORTH IN BOTH. WORK NOT PARTICULARLY DETAILED, MARKED OR SPECIFIED, SHALL BE IDENTICAL OR SIMILAR TO LIKE CASES OF CONSTRUCTION THAT ARE DETAILED, MARKED OR SPECIFIED. IF CONFLICTS OCCUR ON DRAWINGS AND/OR SPECIFICATIONS, THE MOST EXPENSIVE MATERIALS OR METHODS WILL PREVAIL.
   C. SHOULD AN ERROR APPEAR IN THE WORKING DETAILS OR SPECIFICATIONS OR IN WORK DONE BY OTHERS AFFECTING THIS WORK, THE CONTRACTOR SHALL NOTIFY THE ARCHITECT AT ONCE AND IN WRITING. IF THE CONTRACTOR PROCEEDS WITH THE WORK SO AFFECTED WITHOUT HAVING GIVEN SUCH WRITTEN NOTICE AND WITHOUT RECEIVING THE NECESSARY APPROVAL, DECISION OR INSTRUCTIONS IN WRITING FROM THE OWNER, THEN HE SHALL HAVE NO VALID CLAIM AGAINST THE OWNER, FOR THE COST OF SO PROCEEDING AND SHALL MAKE GOOD ANY RESULTING DAMAGE OR DEFECT. NO VERBAL APPROVAL, DECISION, OR INSTRUCTION SHALL BE VALID OR BE THE BASIS FOR ANY CLAIM AGAINST THE OWNER, ITS OFFICERS, EMPLOYEES OR AGENTS. THE FOREGOING INCLUDES TYPICAL ERRORS IN THE WORKING DETAILS OR SPECIFICATIONS. ERRORS IN THE WORKING DETAILS WHERE THE INTERPRETATION IS DOUBTFUL OR WHERE THE ERROR IS SUFFICIENTLY APPARENT AS TO PLACE A REASONABLY PRUDENT CONTRACTOR ON NOTICE THAT, SHOULD HE ELECT TO PROCEED, HE IS DOING SO AT HIS OWN RISK.
2. CONSTRUCTION SHALL CONFORM TO ALL APPLICABLE CODES AND REGULATIONS.
3. SHOP DRAWING NOTE:
   A. WHEN NOT ADDRESSED BY DIVISION 1 OF THE SPECIFICATIONS, PAPER FORMAT STRUCTURAL SHOP DRAWINGS SHALL BE SUBMITTED IN THE FORM OF THREE COPIES MINIMUM OF EACH SHEET. WHERE SUBMITTALS ARE ELECTRONIC, FORMAT SHALL BE PDF.
   B. THE PURPOSE OF SHOP DRAWING SUBMITTALS BY THE CONTRACTOR IS TO DEMONSTRATE TO THE STRUCTURAL ENGINEER THAT HE UNDERSTANDS THE DESIGN CONCEPT BY INDICATING WHICH MATERIAL HE INTENDS TO FURNISH AND INSTALL, AND BY DETAILING THE FABRICATION AND INSTALLATION METHODS HE INTENDS TO USE ON A STAND ALONE SET OF DOCUMENTS. DUPLICATION OF DESIGN DOCUMENTS FOR THE PURPOSE OF SHOP DRAWINGS IS NOT ACCEPTABLE.
   C. PRIOR TO FABRICATION, SHOP DRAWINGS SHALL BE SUBMITTED FOR REVIEW BY THE STRUCTURAL ENGINEER. SHOP DRAWING SUBMITTALS SHALL INCLUDE, BUT ARE NOT NECESSARILY LIMITED TO, STRUCTURAL STEEL, REINFORCING STEEL, & GLUE-LAMINATED BEAMS.
   D. PRIOR TO SUBMISSION THE CONTRACTOR SHALL REVIEW ALL SUBMITTALS FOR CONFORMANCE WITH THE CONTRACT DOCUMENTS AND SHALL STAMP SUBMITTALS AS BEING "REVIEWED FOR CONFORMANCE".
   E. SHOP DRAWING SUBMITTALS PROCESSED BY THE STRUCTURAL ENGINEER ARE NOT CHANGE ORDERS.
   F. ANY DETAIL ON THE SHOP DRAWINGS THAT DEVIATES FROM THE CONTRACT DOCUMENTS SHALL CLEARLY BE MARKED WITH THE NOTE "THIS IS A CHANGE".
4. SAFETY NOTE:
   A. IT IS THE CONTRACTORS RESPONSIBILITY TO COMPLY WITH THE PERTINENT SECTIONS, AS THEY APPLY TO THIS PROJECT, OF THE "CONSTRUCTION SAFETY ORDERS" ISSUED BY THE STATE OF CALIFORNIA LATEST EDITION, AND ALL OSHA REQUIREMENTS.
   B. THE CONTRACTOR SHALL BE RESPONSIBLE FOR ADEQUATE DESIGN AND CONSTRUCTION OF ALL FORMS AND SHORING REQUIRED. SHORING INDICATIONS (LOCATION REQUIRED, SIZE NOT REQUIRED ETC.) ARE ONLY SHOWN ON THE STRUCTURAL DRWGS WHEN REQUIRED TO IMPLEMENT THE DESIGN INTENT OF THE FINAL WORK PRODUCT. DETERMINATION WHETHER SHORING IS REQUIRED FOR TEMPORARY OR INTERMEDIATE CONDITIONS DURING CONSTRUCTION IS WHOLLY THE RESPONSIBILITY OF THE CONTRACTOR.
   C. THE OWNER AND THE STRUCTURAL ENGINEER DO NOT ACCEPT ANY RESPONSIBILITY FOR THE CONTRACTOR'S FAILURE TO COMPLY WITH THESE REQUIREMENTS.
5. THE CONTRACTOR SHALL NOTIFY THE ARCHITECT AND STRUCTURAL ENGINEER WHERE A CONFLICT OR DISCREPANCY OCCURS BETWEEN THE STRUCTURAL DRAWINGS AND ANY OTHER PORTION OF THE CONTRACT DOCUMENTS OR EXISTING FIELD CONDITIONS. SUCH NOTIFICATION SHALL BE GIVEN IN DUE TIME SO AS NOT TO AFFECT THE CONSTRUCTION SCHEDULE. IN CASE OF A CONFLICT BETWEEN STRUCTURAL DRAWINGS AND SPECIFICATIONS AND WHERE NO MORE RESTRICTIVE CONDITION SHALL TAKE PRECEDENCE UNLESS WRITTEN APPROVAL HAS BEEN GIVEN FOR THE LEAST RESTRICTIVE. CONTRACTOR SHALL VERIFY ALL DIMENSIONS WITH ARCHITECTURAL PRIOR TO COMMENCING ANY WORK.
6. WHEN CONSTRUCTION ATTACHES TO OR IS WITHIN AN EXISTING BUILDING, A COMPLETE SET OF DRAWINGS OF THE EXISTING BUILDING SHALL BE KEPT ON THE JOB SITE. CONTRACTOR TO OBTAIN THESE DRAWINGS FROM THE OWNER (IF THEY ARE AVAILABLE).
7. CONTRACTOR SHALL PROVIDE AN ALLOWANCE EQUAL TO 2% OF THE BID FOR STRUCTURAL STEEL, MISC. IRON AND REINFORCING STEEL TO BE USED AT THE DISCRETION OF THE STRUCTURAL ENGINEER. UNUSED AMOUNT TO REVERT TO THE OWNER UPON COMPLETION OF THE JOB.
8. ANY SUBSTITUTIONS FOR STRUCTURAL MEMBERS, HARDWARE OR DETAILS SHALL BE REVIEWED BY THE ARCHITECT AND STRUCTURAL ENGINEER.
9. DO NOT SCALE DRAWINGS. CONTACT THE ARCHITECT OR STRUCTURAL ENGINEER FOR ANY DIMENSIONS NOT SHOWN.
10. THESE DRAWINGS ARE NOT COMPLETE UNTIL REVIEWED AND ACCEPTED BY LOCAL BUILDING OFFICIALS AND THE OWNER AND SIGNED BY THE STRUCTURAL ENGINEER.

ABBREVIATIONS

1005N001-1

AB	ANCHOR BOLT	MB	MACHINE BOLT
ABV	ABOVE	MFR	MANUFACTURER
BLW	BELOW	MI	MALLEABLE IRON
BOF	BOTTOM OF FOOTING	MTL	MATERIAL
BRG	BEARING	(N)	NEW
BTWN	BETWEEN	NIC	NOT IN CONTRACT
CC	CENTER TO CENTER	NS	NEAR SIDE
CTJ	CONTROL JOINT	NTS	NOT TO SCALE
CJP	COMPLETE JOINT PENETRATION	NW	NORMAL WEIGHT
CLR	CLEAR	OH	OPPOSITE HAND
CMU	CONCRETE MASONRY UNIT	OSB	ORIENTED STRAND BOARD
CJ	CONSTRUCTION JOINT	PC	PIECE
CONT	CONTINUOUS	PJP	PARTIAL JOINT PENETRATION
CONTR	CONTRACTOR	PT	PRESSURE TREATED
CSK	COUNTERSINK	REIN	REINFORCING
DF	DOUGLAS FIR	RWD	REDWOOD
DL	DEAD LOAD	SC	SLIP CRITICAL
DO	DITTO	SHTG	SHEATHING
DWG	DRAWING	SIM	SIMILAR
(E)	EXISTING	SMS	SHEET METAL SCREW
EF	EACH FACE	SP	STRUCTURAL PANEL
EJ	EXPANSION JOINT	STFNR	STIFFENER
EL	ELEVATION	STGRD	STAGGERED
EN	EDGE NAILING	STL	STEEL
EOS	EDGE OF SLAB	T&B	TOP & BOTTOM
EQ	EQUAL	T&G	TONGUE & GROOVE
EW	EACH WAY	THRD	THREADED
EWEF	EACH WAY EACH FACE	TN	TOE NAIL
FB	FACE OF BLOCK(OR BRICK) OR FLAT BAR	TO	TOP OF
		TOC	TOP OF CONCRETE (SLAB UNO)
FC	FACE OF CONCRETE OR FRAMING CLIP(SIMPSON A35 UNO)	TOF	TOP OF FOOTING OR TOP OF FRAMING
FF	FINISH FLOOR	TOS	TOP OF STEEL
FS	FACE OF STUD OR FAR SIDE	TOW	TOP OF WALL
FT	FIRE TREATED	UNO	UNLESS NOTED OTHERWISE
GA	GAUGE OR GAGE	W/	WITH
GLB	GLUED LAMINATED BEAM	W/O	WITHOUT
HB	HEADED BOLT	WP	WORK POINT
HDG	HOT DIPPED GALVANIZED	WS	WOOD SCREW
HDR	HEADER	WWF	WELDED WIRE FABRIC
HSB	HIGH STRENGTH BOLT	CL	CENTERLINE
HSS	HOLLOW STRUCTURAL SECTION	PL	PLATE
HT	HEIGHT	WF	WIDE FLANGE
JH	JOIST HANGER	#	NUMBER OR POUNDS
LL	LIVE LOAD	SQ	SQUARE
LLH	LONG LEG HORIZONTAL	Ø	ROUND OR DIAMETER
LLV	LONG LEG VERTICAL		CONT WOOD IN SECTION
LS	LAG SCREW		WOOD BLOCKING IN SECTION
LW	LIGHT WEIGHT		END OF WOOD PIECE
LWIC	LIGHT WEIGHT INSULATING CONC	(A)	"MEMBER" ABOVE
		(B)	"MEMBER" BELOW

WINDOW SYSTEM DESIGN CRITERIA

1005N001-1

2012 IBC WIND SPEED - 90 MPH EXPOSURE CATEGORY C .

1. ALL MULLIONS AND THEIR CONNECTIONS SHALL BE DESIGNED TO SPAN BETWEEN STRUCTURAL SUPPORTS AS SHOWN ON DRAWINGS. VERIFY CEILING HEIGHTS WITH ARCHITECTURAL DRAWINGS.
2. ALL MULLIONS AND THEIR CONNECTIONS SHALL ALLOW FOR A RELATIVE MOVEMENT BETWEEN STORIES OF NOT LESS THAN 2" DUE TO SEISMIC LOADS.
3. SUBMIT COMPLETE SHOP DRAWINGS AND CALCULATIONS SIGNED BY A REGISTERED CALIFORNIA CIVIL ENGINEER PRIOR TO FABRICATION.
4. DETAILS PROVIDED IN THESE DRAWINGS ARE FOR REFERENCE ONLY. WINDOW SYSTEM MANUFACTURER SHALL DESIGN AND SUPPLY ALL CONNECTION MATERIALS (INCLUDING EMBEDDED ITEMS, DIAGONAL BRACING ANGLES, BRACKETS, OUTRIGGERS, ETC.) AS REQUIRED FOR THE SUPPORT OF THE WINDOW SYSTEM. EMBEDDED ITEMS SHALL BE INSTALLED BY THE GENERAL CONTRACTOR.

DESIGN CRITERIA

1005N002-1

1. CODES AND STANDARDS
   2012 CALIFORNIA BUILDING CODE (CBC)
   ASCE 7-10
   ACI 318-11
   AISC 360-10, 341-10, 358-10
   TMS 402-11/ACI 530-11/ASCE 5-11
   TMS 602-08/ACI 530.1-08/ASCE 6-08
   2012 NDS, 2008 SDPWS
   VA H-18-1
2. VERTICAL LOADS
   ROOF LIVE LOAD = 20 PSF
   FLOOR LIVE LOAD = 89 PSF
   FLOOR PARTITION LIVE LOAD = 15 PSF
   CORRIDORS = 100 PSF
   LIVE LOADS ARE REDUCED WHERE PERMITTED BY CODE.
3. SOILS VALUES
   ALLOWABLE SOILS PRESSURE
   A. DL 2000 PSF
   B. DL + LL 3000 PSF
   C. DL + LL + SEISMIC 4000 PSF
   FOOTING
   MINIMUM DEPTH = 18"
   MINIMUM WIDTH = 12"
4. LATERAL LOADS
   SEISMIC:
   SITE CLASS C CS = .072
   SS = .548 ; SDS = .432
   S1 = .261 ; SD1 = .268
   R = 6 ; I = 1.0
   Ω0 = 2 ; CD = 5
   I_e = 1.0 TYPICAL
   I_p= 1.5 PER ASCE 7-05 SECT 13.1.3
   OCCUPANCY CATEGORY: 11
   SEISMIC DESIGN CATEGORY: D
   SEISMIC BASE SHEAR
   = .88 KIPS (NS DIR.)
   = .88 KIPS (EW DIR.)
   SEISMIC FORCE RESISTING SYSTEM:
   SPECIAL CONCENTRIC BRACED FRAME (SCBF)
   ANALYSIS PROCEDURE: EQ. STATIC

   WIND:
   BASIC WIND SPEED = 110 MPH (ULTIMATE)
   EXPOSURE CATEGORY C
   IW = 1.0 ; GCPI = ±.18

STATEMENT OF STRUCTURAL SPECIAL INSPECTIONS AND TESTING

1005N004-1

1. SPECIAL INSPECTIONS AND TESTING SHALL BE PROVIDED BY AN INSPECTION AGENCY, EMPLOYED BY THE CONTRACTOR, AND QUALIFIED BY THE VA TO INSPECT THE PARTICULAR TYPE OF CONSTRUCTION. TESTS AND INSPECTIONS, AS REQUIRED BY SECTIONS 110, 1704, 1707, AND 1708 OF THE 2012 IBC, SHALL BE PERFORMED DURING CONSTRUCTION ON THE TYPES OF WORK LISTED BELOW:

	INSPECTIONS	TESTING
■ STEEL CONSTRUCTION	SECTION 1704.3 & TABLE 1704.3	SECTION 1708.3
■ CONCRETE CONSTRUCTION	SECTION 1704.4 & TABLE 1704.4	SECTION 1708.2
☐ MASONRY CONSTRUCTION-LEVEL 1	SECTION 1704.5 & TABLE 1704.5.1	-
☐ MASONRY CONSTRUCTION-LEVEL 2	SECTION 1704.5 & TABLE 1704.5.3	-
☐ WOOD CONSTRUCTION	SECTION 1704.6	-
☐ HIGH-LAMINATED DIAPHRAGM	SECTION 1704.6.1	-
■ SOILS	SECTION 1704.7 & TABLE 1704.7	-
☐ PILE FOUNDATIONS	SECTION 1704.8 & TABLE 1704.8	-
☐ PIER FOUNDATIONS	SECTION 1704.9 & TABLE 1704.9	-
☐ HELICAL PILE FOUNDATIONS	SECTION 1704.10	-
■ POST-INSTALLED ANCHORS	MANUFACTURER'S ICC REPORT	-

2. INSPECTIONS MAY BE CONTINUOUS OR PERIODIC AS ALLOWED BY THE INDIVIDUAL MATERIAL OR COMPONENT INSPECTION SECTIONS AND TABLES OF SECTION 1704.
3. THE SPECIAL INSPECTOR SHALL SUBMIT INSPECTION REPORTS TO THE VA AND THE DESIGN PROFESSIONAL IN RESPONSIBLE CHARGE. THE REPORTS SHALL INDICATE WHETHER WORK INSPECTED CONFORMED TO THE CONSTRUCTION DOCUMENTS. ANY DISCREPANCIES SHALL BE IMMEDIATELY BROUGHT TO THE ATTENTION OF THE CONTRACTOR FOR CORRECTION. IF DISCREPANCIES ARE NOT CORRECTED, THEY SHALL BE BROUGHT TO THE ATTENTION OF THE VA AND THE DESIGN PROFESSIONAL IN RESPONSIBLE CHARGE.
4. ALL SPECIAL INSPECTION AGENCIES / INDIVIDUALS AND SHOP FABRICATORS SHALL BE APPROVED BY THE VA PRIOR TO COMMENCEMENT OF WORK.
5. TESTING AND INSPECTION RECORDS SHALL BE RETAINED UNTIL COMPLETION OF CONSTRUCTION.
6. THE CONTRACTOR SHALL SUBMIT A WRITTEN STATEMENT TO THE DSA ACKNOWLEDGING RESPONSIBILITY FOR CONSTRUCTION OF THE MAIN LATERAL-FORCE RESISTING SYSTEM PRIOR TO COMMENCEMENT OF THAT WORK AS REQUIRED BY SECTION 1709 OF THE 2012 IBC.
7. SPECIAL INSPECTIONS FOR SEISMIC AND WIND RESISTANCE SHALL INCLUDE THOSE REQUIREMENTS LISTED IN SECTION 1705.3 AND 1705.4 AS APPLICABLE. SPECIAL INSPECTIONS FOR SEISMIC RESISTANCE SHALL INCLUDE ALL ITEMS IN SECTION 1707. SPECIAL INSPECTIONS FOR WIND REQUIREMENTS SHALL INCLUDE ALL ITEMS IN SECTION 1706. STRUCTURAL TESTING FOR SEISMIC RESISTANCE SHALL BE IN ACCORDANCE WITH SECTION 1708.
8. MASONRY CONSTRUCTION LEVEL 2 APPLIES TO STRUCTURES CLASSIFIED AS OCCUPANCY CATEGORY IV ONLY.
9. ALL SOILS AND FOUNDATION EXCAVATION INSPECTIONS SHALL BE BY THE GEOTECHNICAL ENGINEER OF RECORD.
10. FOR TESTING AND INSPECTION REQUIREMENTS FOR NON-STRUCTURAL MATERIALS AND COMPONENTS, SEE CONSTRUCTION DOCUMENTS AND COMPLY WITH CHAPTER 17 OF THE 2012 IBC.

FOUNDATIONS

2005N001-1

1. ALL FOUNDATION WORK SHALL BE DONE IN ACCORDANCE WITH THE REQUIREMENTS OF THE SOILS REPORT # 9596.01 BY WALLACE KUHL & ASSOC. DATED 12/10/2012.
2. FOUNDATIONS SHALL BEAR ON ENGINEERED FILL. SEE NOTES AND DETAILS ON SHEET S2.01.
3. ALL FILLING, BACKFILLING AND COMPACTION SHALL BE DONE UNDER THE OBSERVATION OF A REPRESENTATIVE OF THE SOILS ENGINEER AND MUST BE COMPACTED TO THE MINIMUM DENSITY SPECIFIED IN ACCORDANCE WITH THE PROCEDURE OUTLINED IN THE SOILS REPORT.
4. BUILDING PAD CONSTRUCTION SHALL CONFORM TO THE REQUIREMENTS OF THE SOILS REPORT. THE EXTENT AND DEPTH OF OVEREXCAVATION AND PLACEMENT OF ENGINEERED FILL SHALL AT A MINIMUM BE AS SHOWN ON THE PLANS. FINAL DEPTH AND EXTENT OF EXCAVATION AND FILL SHALL BE DETERMINED AT TIME OF CONSTRUCTION BY A REPRESENTATIVE OF THE SOILS ENGINEER. FOUNDATION DEPTHS INDICATED ON PLANS ARE FOR ESTIMATING PURPOSES ONLY.
5. BOTTOMS OF ALL FOUNDATIONS SHALL BE LEVEL. CHANGES IN BOTTOM OF FOUNDATION ELEVATION SHALL BE MADE ACCORDING TO STEPPED FOOTING DETAIL ON THE TYPICAL DETAIL SHEET.
6. FOUNDATION CONCRETE MAY BE PLACED DIRECTLY AGAINST NEAT EXCAVATIONS PROVIDED THE EXCAVATIONS ARE STABLE (AS DETERMINED BY A REPRESENTATIVE OF THE SOILS ENGINEER). OTHERWISE, FOUNDATIONS SHALL BE FULLY FORMED. USE MINIMUM PLANKING SHOWN TO PROTECT AGAINST SLOUGHING, AS REQUIRED. PLANKING DOES NOT REPLACE FORMWORK REQUIRED TO STABILIZE EXCAVATION.
7. THE SURFACE OF ALL HORIZONTAL CONSTRUCTION JOINTS SHALL BE CLEANED & ROUGHENED BY EXPOSING CLEAN AGGREGATE SOLIDLY EMBEDDED IN MORTAR MATRIX.
8. NOTIFY THE STRUCTURAL ENGINEER 48 HOURS BEFORE CASTING FOUNDATIONS.
9. A REPRESENTATIVE OF THE SOILS ENGINEER SHALL ADVISE THE VA IN WRITING THAT:
   A. THE BUILDING PAD WAS PREPARED IN ACCORDANCE WITH THE SOILS REPORT.
   B. THE UTILITY TRENCHES HAVE BEEN PROPERLY BACKFILLED AND COMPACTED AND;
   C. THE FOUNDATION EXCAVATION DEPTH AND MATERIAL ARE ADEQUATE TO ACHIEVE DESIGN BEARING CAPACITY; AND FORMING COMPLY WITH THE SOILS REPORT AND APPROVED PLAN.

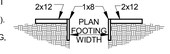

METAL DECK NOTES

5005N001-1

1. PROVIDE METAL DECKING OF TYPE AND GAUGE AS SHOWN ON PLANS.
2. METAL FLOOR DECK SHALL BE COMPOSITE TYPE, CONFORMING TO ASTM A653, STRUCTURAL QUALITY, WITH MINIMUM YIELD STRENGTH OF 38 KSI AND SHALL BE ZINC COATED PER ASTM A653, G60 COATING DESIGNATION.
3. METAL ROOF DECK SHALL CONFORM TO ASTM A653, STRUCTURAL QUALITY, WITH MINIMUM YIELD STRENGTH OF 38 KSI AND SHALL BE ZINC COATED PER ASTM A653, G60 COATING DESIGNATION.
4. PRIOR TO FABRICATION, THE CONTRACTOR SHALL SUBMIT SHOP DRAWINGS FOR THE METAL DECKING, SHOWING DECK GAUGE, SIZE AND LAYOUT AS WELL AS CLOSURE CONDITIONS, WELDS TO SUPPORTS AND SIDE LAP DETAILS.
5. CONNECTION AND WELDING OF DECKING TO STRUCTURAL SUPPORTS AND DECK SIDE SEAMS SHALL BE AS SPECIFIED IN THE STRUCTURAL DRAWINGS. ALL ELECTRODES FOR WELDING SHALL COMPLY WITH AWS CODE, E60 SERIES MINIMUM.
6. ALL REINFORCED OPENINGS IN METAL DECK SHALL BE INSTALLED BY METAL DECK SUBCONTRACTOR.
7. AT METAL DECKS TO RECEIVE CONCRETE, ABSOLUTELY NO CONDUIT OR PIPING OF ANY TYPE IS TO BE PLACED HORIZONTALLY WITHIN THE DEPTH OF THE CONCRETE ABOVE THE METAL DECK.
8. AT METAL DECK WITHOUT CONCRETE FILL THE FOLLOWING MAY BE ATTACHED WITHOUT SPECIFIC APPROVAL OF THE STRUCTURAL ENGINEER: ACOUSTICAL TILE AND GYPSUM BOARD CEILINGS ONLY; NO PIPING, DUCTING OR CONDUIT. MAXIMUM CEILING WEIGHT - 3.5 PSF. MAXIMUM WIRE HANGER LOAD = 60#.
9. WHERE SUSPENSION OR HANGER WIRES ARE REQUIRED BY OTHERS, VERIFY AND COORDINATE LOCATIONS, PATTERNS, SPACINGS, ETC. WITH THE APPROPRIATE TRADE. DRILL OR PUNCH HOLES AT BOTTOM OF DECK FLUTES OF SUFFICIENT SIZE TO PASS SUPPORT WIRES. WIRE SUPPORTS SHALL BE LOOPED AND SECURED WITH A MINIMUM OF THREE (3) TIGHT TURNS AROUND A MINIMUM 1-1/2" X 12" LONG FURRING CHANNEL OR NO. 3 X 12" LONG REINFORCING BAR CENTERED ABOVE THE HOLE AND LAID IN THE DECK FLUTES.

METAL STAIRWAYS

5005N001-1

1. SUPPLIER SHALL PROVIDE COMPLETE DESIGN DRAWINGS AND CALCULATIONS FOR ALL METAL STAIRWAYS. STAIRWAYS SHALL BE DESIGNED FOR DEAD LOAD + 100 PSF LIVE LOAD, AND SEISMIC LOADS.
2. SUPPLIER SHALL DESIGN, SUPPLY, AND INSTALL ALL CONNECTION MATERIALS WHICH SHALL INCLUDE BUT ARE NOT NECESSARILY LIMITED TO EMBEDDED ITEMS, BEARING PLATES, STIFFENERS, DIAGONAL STRUTS, SUPPORT ANGLES, CHANNELS AND TUBES. ALL LOADING CONDITIONS RESULTING IN ECCENTRICITIES OR TORSION TO BEAMS AND/OR COLUMNS SHALL BE RESOLVED BY THE INSTALLATION OF STIFFENERS AND DIAGONAL STRUTS, DESIGNED, SUPPLIED AND INSTALLED BY THE SUPPLIER.
3. SEISMIC FORCES SHALL BE ACCOUNTED FOR AND BRACED BACK TO THE MAIN STRUCTURE. SLIP DETAILS SHALL BE INCORPORATED AT GROUND LEVEL FOR STORY DRIFT. POSITIVE TIES USING REBAR SHALL BE PROVIDED TO RESIST SEISMIC FORCES AT FLOOR LEVELS WITH CONCRETE FILL.
4. SEE ARCHITECTURAL DRAWINGS FOR STAIRWAY DIMENSIONS AND DETAILS.
5. SUBMIT SHOP DRAWINGS AND CALCULATIONS SIGNED BY A CIVIL ENGINEER, REGISTERED IN THE STATE IN WHICH THE PROJECT IS LOCATED, FOR REVIEW BY THE ARCHITECT AND/OR STRUCTURAL ENGINEER, AND APPROVAL BY THE ENFORCEMENT AGENCY PRIOR TO FABRICATION.
6. PROVIDE REBAR AT ALL CONCRETE FILL ON TREADS AND LANDINGS PER SPECS.
7. SEE SPECIFICATIONS FOR ADDITIONAL DESIGN CRITERIA.

CONCRETE

3005N001-1

1. STRUCTURAL CONCRETE SHALL ATTAIN 28 DAY COMPRESSIVE STRENGTH AS REQUIRED IN NOTE #28. MAXIMUM SLUMP SHALL NOT EXCEED 4 INCHES.
2. CONCRETE MIX DESIGNS SHALL BE PREPARED BY A REGISTERED CIVIL ENGINEER, REVIEWED BY CONTRACTOR'S TESTING LABORATORY AND SUBMITTED TO THE STRUCTURAL ENGINEER FOR REVIEW.
3. CEMENTITIOUS MATERIALS:
   CEMENT SHALL CONFORM TO ASTM C-150 TYPE I OR II.
   FLY ASH SHALL CONFORM TO ASTM C-618. MAX. QUANTITY OF FLY ASH SHALL BE AS GIVEN IN SPECS (15% MAX UNO).
4. CONCRETE AGGREGATES SHALL CONFORM TO ASTM C-33 FOR NORMAL WEIGHT CONCRETE AND ASTM C-330 FOR LIGHTWEIGHT CONCRETE.
5. NON-SHRINK GROUT OR DRYPACK SHALL CONSIST OF A PREMIXED NONMETALLIC FORMULA.
6. REINFORCING STEEL SHALL CONFORM TO ASTM A-615 GRADE 60 FOR #3 AND LARGER, EXCEPT REINFORCING STEEL TO BE WELDED SHALL CONFORM TO ASTM A-706. CONTRACTOR SHALL SUBMIT REBAR MILL CERTIFICATES.
7. ALL PREHEATING AND WELDING OF REINFORCING BARS SHALL BE DONE IN ACCORDANCE WITH AWS D1.4 LATEST EDITION AND SHALL BE CONTINUOUSLY INSPECTED BY A QUALIFIED LABORATORY. CONTRACTOR SHALL FURNISH WPS FOR ALL REBAR WELDING TO THE LABORATORY.
8. REINFORCING STEEL SHALL BE FABRICATED ACCORDING TO "MANUAL OF STANDARD PRACTICE FOR REINFORCED CONCRETE CONSTRUCTION".
9. WIRE FABRIC SHALL CONFORM TO ASTM A-185.
10. DIMENSIONS SHOWN FOR LOCATION OF REINFORCING ARE TO THE FACE OF BARS LISTED AND DENOTE CLEAR COVERAGE. NON-PRESTRESSED, CAST-IN-PLACE CONCRETE COVERAGE SHALL BE AS FOLLOWS, UNO:
    CONCRETE DEPOSITED DIRECTLY AGAINST GROUND (EXCEPT SLABS)--- 3"
    CONCRETE EXPOSED TO GROUND OR WEATHER BUT PLACED IN FORMS:
    #5 AND SMALLER---------- 1-1/2"
    #6 AND LARGER ---------- 2"
    BEAMS & COLUMNS (TIES)---------- 1-1/2"
    BEAMS & COLUMNS (MAIN REINFORCING)---------- 2"
    CAST-IN-PLACE WALLS (EXTERIOR FACE & SOIL SIDE)---------- SEE ABOVE
    CAST-IN-PLACE WALLS (INTERIOR FACE-#11 & SMALLER)------ 3/4"
    TILT-UP WALLS---------- SEE DETAILS
    SLABS (ON FORMS)---------- 3/4"
    SLABS (ON GROUND)---------- 2" CLEAR FROM TOP UNO
11. SPLICES IN CONTINUOUS REINFORCEMENT SHALL BE LAPPED UNO, SEE SCHEDULE THIS SHEET. SPLICES IN ADJACENT BARS SHALL BE GREATER THAN 5'-0" APART. SPLICE CONTINUOUS BARS IN SOIL-BEARING GRADE BEAMS, STRUCTURAL SLABS ON GRADE AND MAT FOUNDATIONS IN THE MIDDLE THIRD UNO; TOP BARS AT CENTERLINE OF SUPPORT; BOTTOM BARS AT MID-SPAN. SPLICE CONTINUOUS BARS IN ELEVATED SLABS AND BEAMS, ETC. AS FOLLOWS UNO: TOP BARS AT MID-SPAN; BOTTOM BARS AT CENTERLINE OF SUPPORT. ALL BARS SIZE #14 AND LARGER SHALL BE CONTINUOUS FOR FULL LENGTH SHOWN OR SPLICED WITH MECHANICAL COUPLERS AS NOTED IN DETAILS. SPLICES IN WWF SHALL BE 1-1/2 MESHES WIDE.
12. THE MINIMUM CLEAR SPACING BETWEEN PARALLEL BARS IN A LAYER SHALL NOT BE LESS THAN THE LARGER OF BAR DIAMETER, 1", OR 33% GREATER THAN THE MAXIMUM AGGREGATE SIZE (NOMINAL), WHICHEVER IS GREATEST. THIS REQUIREMENT ALSO APPLIES TO THE CLEAR SPACING BETWEEN DIFFERENT LAYERS OF PARALLEL BARS AND TO THE CLEAR DISTANCE BETWEEN A CONTACT LAP SPLICE AND ADJACENT SPLICES OR BARS.
13. ALL HOOKS SHALL BE STANDARD HOOKS UNLESS OTHERWISE SHOWN OR NOTED. AT WALLS, PROVIDE HOOKS AT ENDS OF ALL REINFORCING AT ENDS, CORNERS AND INTERSECTIONS, UNO.
14. CONSTRUCTION JOINTS SHALL BE MADE ROUGH AND ALL LAITANCE REMOVED FROM THE SURFACE. CONCRETE MAY BE DOWELED BY CHIPPING THE ENTIRE SURFACE, SAND BLASTING, OR RAKING THE SURFACE TO PROVIDE 1/4" DEEP DEFORMATIONS.
15. REMOVE ALL DEBRIS FROM FORMS BEFORE CASTING ANY CONCRETE.
16. REINFORCING, DOWELS, BOLTS, ANCHORS, SLEEVES, ETC. TO BE EMBEDDED IN CONCRETE SHALL BE SECURELY POSITIONED BEFORE PLACING CONCRETE.
17. ANCHOR BOLTS CAST IN CONCRETE OR MASONRY FOR WALL SILL AND LEDGER/APPLICATIONS SHALL BE HEADED BOLTS WITH CUT THREADS CONFORMING TO ASTM A307, UNO. REFER TO "WOOD" NOTES FOR ADDITIONAL REQUIREMENTS FOR BOLTS IN CONTACT WITH PRESSURE TREATED OR FIRE RETARDANT TREATED MATERIAL. REFER TO STRUCTURAL STEEL NOTE FOR REQUIREMENTS FOR ANCHOR RODS (AR'S) CAST IN CONCRETE FOR COLUMN BASE PLATE AND STEEL EMBED APPLICATIONS.
18. WALLS SHALL BE CAST IN HORIZONTAL LAYERS OF 2'-0" MAXIMUM DEPTH.
19. CONCRETE IN WALLS, PIERS OR COLUMNS SHALL SET AT LEAST 2 HOURS BEFORE PLACING CONCRETE IN BEAMS, SPANDRELS, OR SLABS SUPPORTED THEREON.
20. HORIZONTAL WALL BARS IN MULTI-CURTAIN CAST IN PLACE WALLS SHALL BE STAGGERED.
21. DOWEL ALL VERTICAL REINFORCING IN WALLS AND COLUMNS FROM FOUNDATION WITH SAME SIZE BAR.
22. CONSOLIDATE CONCRETE PLACED IN FORMS BY MECHANICAL VIBRATING EQUIPMENT SUPPLEMENTED BY HAND-SPADING, RODDING OR TAMPING. USE EQUIPMENT AND PROCEDURES FOR CONSOLIDATION OF CONCRETE IN ACCORDANCE WITH THE RECOMMENDED PRACTICES OF ACI 309 TO SUIT THE TYPE OF CONCRETE AND PROJECT CONDITIONS. CONCRETE SHALL NOT BE DROPPED THROUGH REINFORCING STEEL (AS IN WALLS) SO AS TO CAUSE SEGREGATION OF AGGREGATES. IN SLOPED SURFACES PUMPERS AND CHUTES OR TRUNKS OF VARIABLE LENGTHS SHALL BE USED SO THAT THE FREE UNCONFINED FALL OF CONCRETE SHALL NOT EXCEED 6 FEET.
23. NO WOOD SPREADERS ALLOWED. NO WOOD STAKES ALLOWED IN AREAS TO BE CONCRETED.
24. ADDITIONAL REINFORCING IN PRECAST OR TILT-UP PANELS REQUIRED FOR LIFTING STRESSES SHALL BE SUPPLIED BY CONTRACTOR.
25. PROVIDE #5 X 4'-0" DIAGONAL REINFORCING AT TOP AND BOTTOM OF SLAB AT ALL RE-ENTRANT CORNERS TYPICAL. THIS APPLIES TO SLAB ON GRADE, CONCRETE OVER METAL DECK, AND ELEVATED STRUCTURAL SLAB CONDITIONS.
26. ALL SAW CUTTING SHALL BE DONE AFTER INITIAL SET HAS OCCURRED TO AVOID TEARING OR

TYPICAL DETAILS

APPLICABLE TO ALL DRAWINGS UNLESS NOTED OR SHOWN OTHERWISE

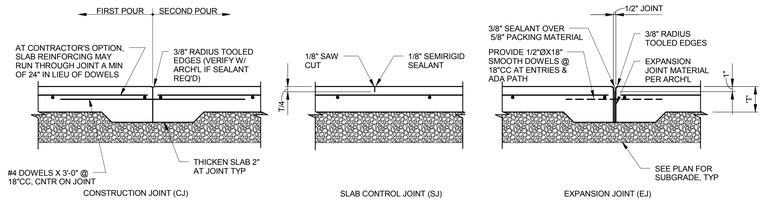

NOTE:
1. CONSTRUCTION JOINTS AND CONTROL JOINTS SHALL DIVIDE SLAB INTO AREAS NOT EXCEEDING 225 SQ FT WITHOUT REENTRANT CORNERS AND WITH LENGTH TO WIDTH RATIOS NOT EXCEEDING 1 1/2 TO 1. JOINT SPACING SHALL NOT EXCEED 15 FEET IN EITHER DIRECTION.
2. CONTRACTOR SHALL SUBMIT LAYOUT PLAN SHOWING PROPOSED CONTROL AND CONSTRUCTION JOINT LOCATIONS TO ARCHITECT & STRUCTURAL ENGINEER FOR REVIEW & APPROVAL.
3. SEMIRIGID SEALANT TO BE EUCLID EUCO #700 OR EQUAL.

SLAB ON GRADE JOINTS (1/S1.02)

310SD001-12

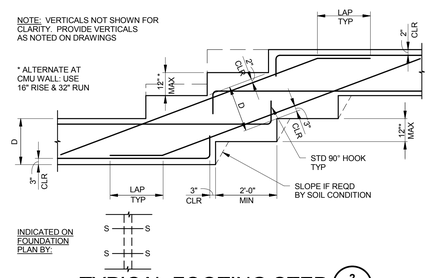

TYPICAL FOOTING STEP (2/S1.02)

200SD016-32

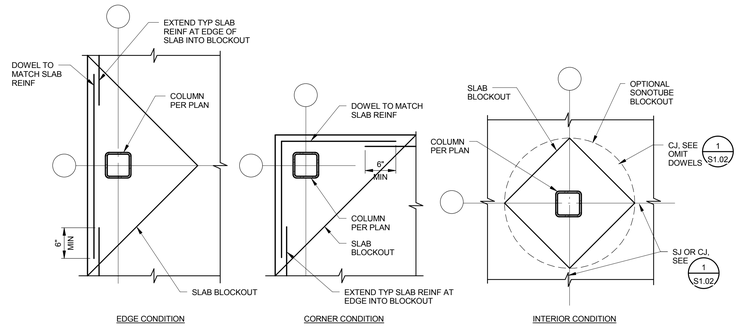

NOTE:
1. SLAB BLOCKOUT SHALL NOT EXTEND BEYOND FOOTING.
2. AT EXPOSED CONCRETE CONDITIONS, COORDINATE BLOCKOUT SHAPE AND SIZE W/ ARCH'L DWGS.

SLAB BLOCKOUT (3/S1.02)

310SD002-12

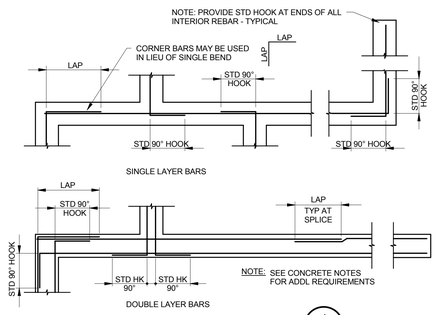

CORNER REINFORCING AT CONCRETE FTGS (4/S1.02)

200SD011-32

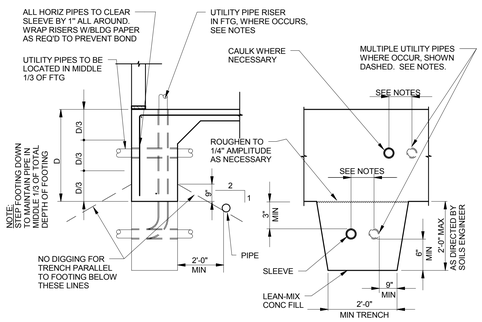

NOTES:
1. REINFORCING SHALL NOT BE INTERRUPTED, CUT OR DISPLACED BY PLACEMENT OF UTILITY PIPE.
2. LEAN MIX CONCRETE FILL TO BE PLACED BEFORE FTG IS CAST (MONO-POUR FTG CONC OPTIONAL). MAKE SAME WIDTH AS FTG AND FULL WIDTH OF PIPE TRENCH.
3. STEP FTG IF PIPE OCCURS IN LOWER THIRD OF ORIGINAL FOOTING DEPTH.
4. NO PIPES SHALL BE PLACED BELOW SPREAD FTGS OR WITHIN 2 TO 1 BEARING ZONE AROUND SPREAD FOOTING.
5. IF PIPE IS IN PLACE PRIOR TO CASTING CONCRETE, WRAP PIPE W/ 1" STYROFOAM INSULATION IN LIEU OF SLEEVE.
6. UTILITY PIPES ARE NOT ALLOWED PARALLEL IN FOOTING.
7. MULTIPLE UTILITY PIPES (TWO OR MORE) MAY BE INSTALLED AS SHOWN @ LEFT, PROVIDED THEY ARE SPACED A MINIMUM OF 4 PIPE/CONDUIT DIAMETERS ON CENTER WITH A MINIMUM OF 3" OF CONCRETE BETWEEN. PIPE DIAMETER INDICATED IS THE ROUGH HOLE SIZE THRU FOOTING.
8. UTILITY PIPES RISERS MAY OCCUR IN CONTINUOUS WALL FOOTINGS PROVIDED THEY ARE NO LARGER THAN (FOOTING WIDTH/6) AND OCCUR W/IN THE MIDDLE 1/2 OF THE FOOTING WIDTH. MULTIPLE RISERS MAY OCCUR IF SPACED AS NOTED @ LEFT.
9. UTILITY PIPES PERPENDICULAR TO FOOTINGS AND MORE THAN 2'-0" BELOW BOTTOM OF FOOTINGS DO NOT REQUIRE LEAN-MIX CONCRETE ENCASEMENT SUBJECT TO ACCEPTANCE OF THE SOILS ENGINEER.
10. CONDITIONS NOT CONFORMING TO THE PARAMETERS NOTED ABOVE SHALL BE REVIEWED ON A CASE-BY-CASE BASIS.

CONCRETE FOOTINGS AT UTILITY PIPES (5/S1.02)

200SD003-32

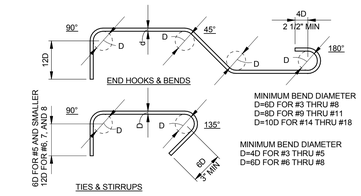

NOTE: ALL HOOKS SHALL BE 90° OR 180° STANDARD HOOKS UNLESS OTHERWISE SHOWN OR NOTED.

STANDARD REBAR HOOKS AND BENDS (6/S1.02)

300SD001-12

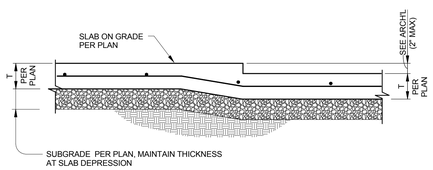

NOTE:
DETAIL APPLIES TO DEPRESSION/ STEPS ≤ 2", SEE (9/S1.02) FOR LARGER DEPRESSION / STEPS.

SLAB DEPRESSION (7/S1.02)

310SD004-12

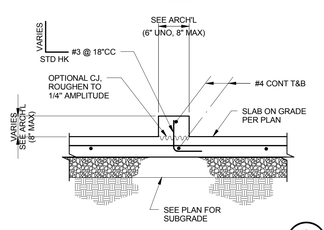

CURB AT SLAB ON GRADE (8/S1.02)

310SD005-12

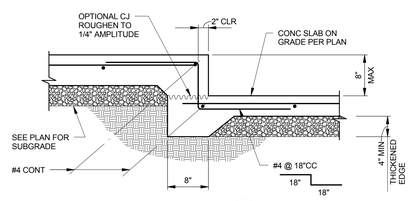

STEP IN SLAB (9/S1.02)

310SD003-12

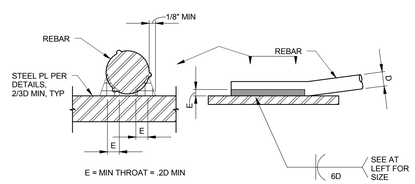

NOTES:
1. REINFORCING TO BE WELDED, EXCEPT ASTM A706, SHALL CONFORM TO THE MATERIAL PROPERTY REQUIREMENTS OF ANSI/AWS D1.4, NEWEST EDITION.
2. ALL PREHEATING AND WELDING SHALL BE DONE IN ACCORDANCE WITH ANSI/AWS D1.4, NEWEST EDITION.
3. ALL WELDING SHALL BE CONTINUOUSLY INSPECTED BY A QUALIFIED LABORATORY.

REBAR WELDING (11/S1.02)

300SD002-32

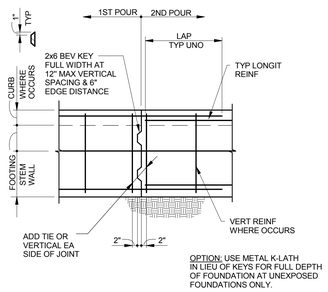

TYPICAL FOUNDATION CONCTRUCTION JOINT (12/S1.02)

200SD012-24

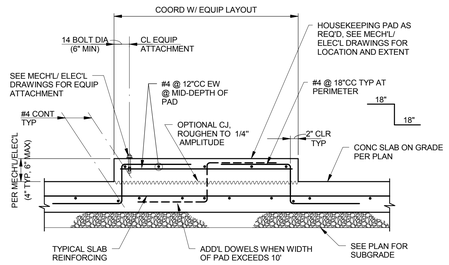

HOUSEKEEPING PAD AT SLAB ON GRADE (13/S1.02)

310SD005-16

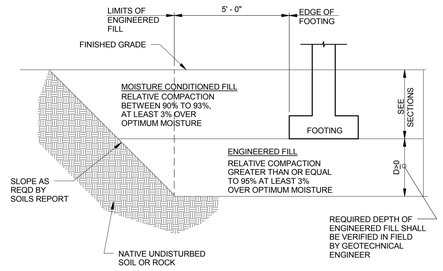

ENGINEERED FILL SECTION (14/S1.02)

200SD001-32

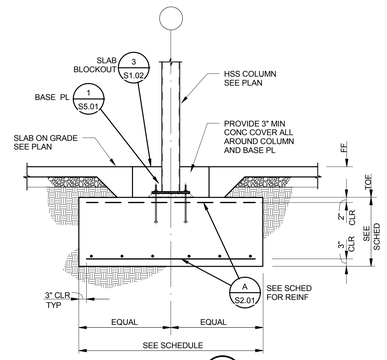

SECTION (15/S1.02)

TYPICAL SPREAD FOOTING

210SD011-24

100% CONSTRUCTION DOCUMENTS

HILLIARD ARCHITECTS INC. COPYRIGHT

Revisions:	Date

CONSULTANTS:

Buehler & Buehler Structural Engineers, Inc.
600 Q Street, Suite 200, Sacramento, CA 95811
tel 916.443.2303 fax 916.443.2313

WILLIAM B. RADER No. 3592 STRUCTURAL STATE OF CALIFORNIA

ARCHITECT/ENGINEERS:

HILLIARD ARCHITECTS ESTABLISHED 1988 GOING GREEN

HILLIARD ARCHITECTS, INC
251 Post Street, Suite 620
San Francisco, CA 94108-5017
Tel 415 989 6400, Fax 415 989 3056
www.HilliardArchitects.com

Drawing Title	*TYPICAL CONCRETE DETAILS*
Approved: Project Director	
Project Title	*VAMA MEDICAL SPECIALTIES BUILDING*
Location	VA MATHER
Date	*05/12/2014*
Checked	*WBR*
Drawn	*Author*
Project Number	*612-122*
Building Number	
Drawing Number	*S1.02*
Dwg. of	

Office of Construction and Facilities Management

Department of Veterans Affairs

VA FORM 08-6231

TYPICAL DETAILS

APPLICABLE TO ALL DRAWINGS UNLESS NOTED OR SHOWN OTHERWISE

A S1.03 EXTERIOR WALL OPENING FRAMING SCHEDULE

541SD008-1

'W' WIDTH MAX	JAMBS	HEADER	SILL			
			20 GA	18 GA	16 GA	14 GA
4'-0"	J2	H4	S2	S2	S1	S1
8'-0"	J3	H4-8	S3	S3	S3	S3
12'-0"	J4	H4-10	S3	S4	S4	S3

1. SEE SHEET ____ FOR JAMB, HEADER, AND SILL DETAILS.
2. H4-8, H4-10 INDICATES HEADER TYPE AND DEPTH OF VERTICAL STUD ELEMENTS INSIDE HEADER. FOR DETAIL, SEE 3/S1.05
3. FOR CONNECTION @ BASE OF WALL AT JAMBS, SEE 1/S1.03
4. FOR CONNECTION @ TOP OF WALL AT JAMBS, SEE 2/S1.03 & 3/S1.05

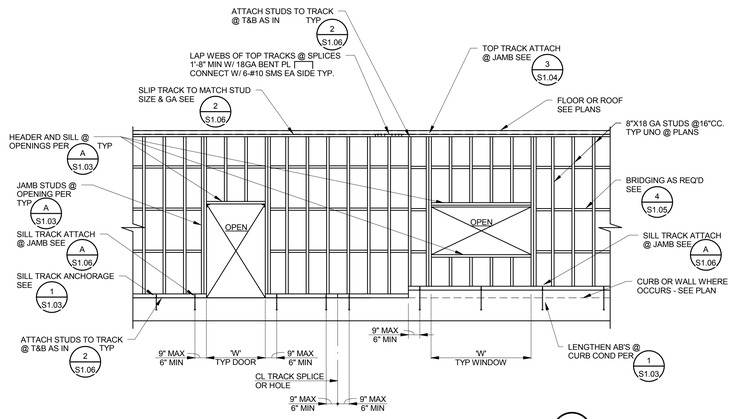

TYPICAL PLATFORM FRAMING METAL STUD WALL ELEVATION B S1.03

541SD009-48

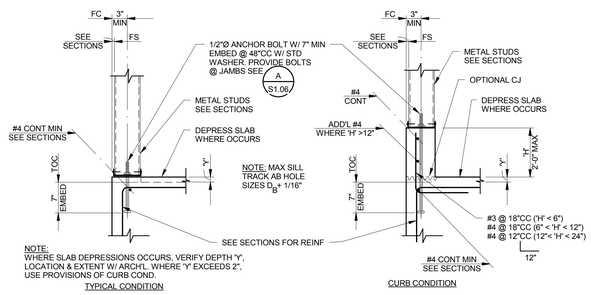

EXTERIOR METAL STUD SILL 1 S1.03

541SD001-12

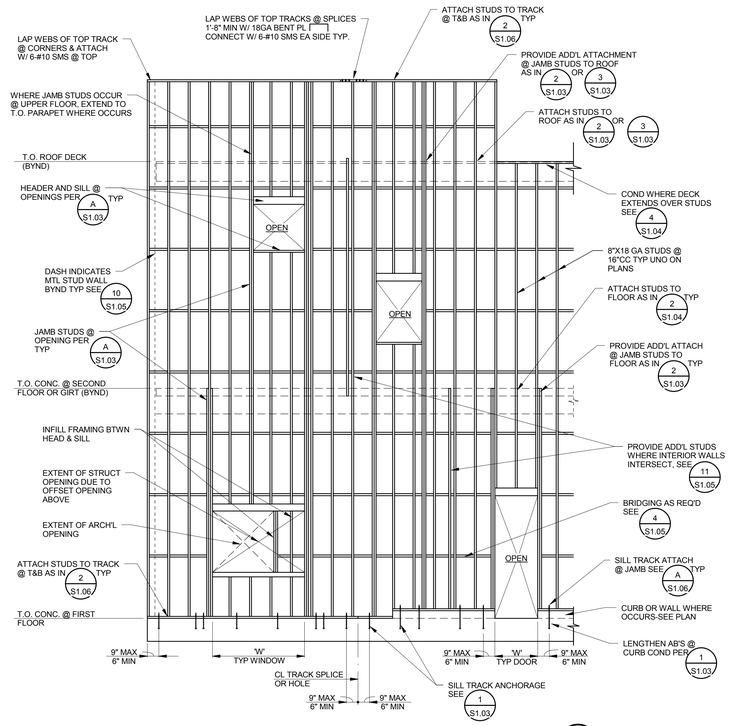

TYPICAL BALLOON FRAMING ELEVATION C S1.03

541SD010-48

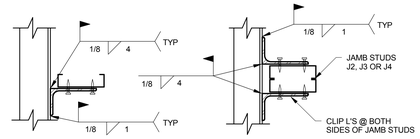

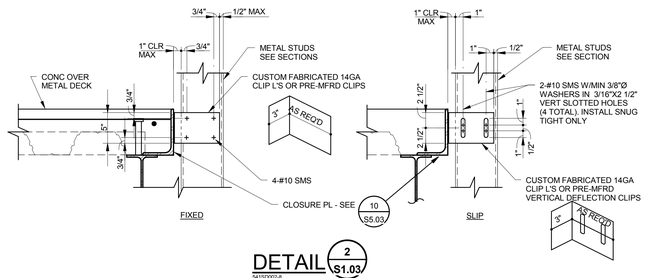

DETAIL 2 S1.03

541SD002-9

METAL STUD SUPPORT @ CONC OVER METAL DECK EDGE

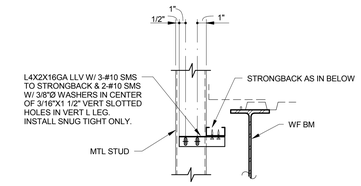

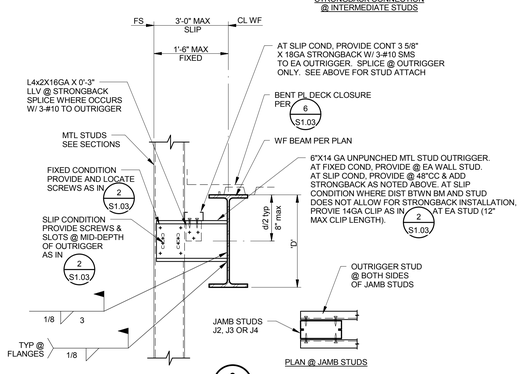

DETAIL 3 S1.03

541SD003-12

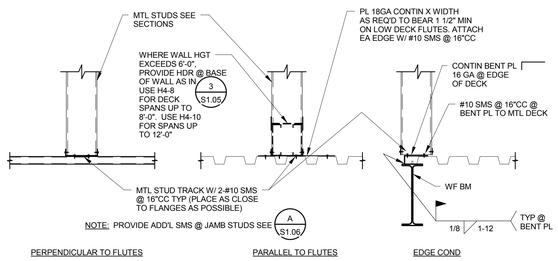

TYPICAL SILL TRACK TO METAL DECK 4 S1.03

541SD004-12

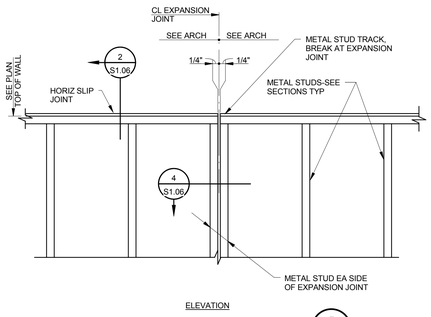

METAL STUD EXPANSION JOINT 5 S1.03

541SD005-12

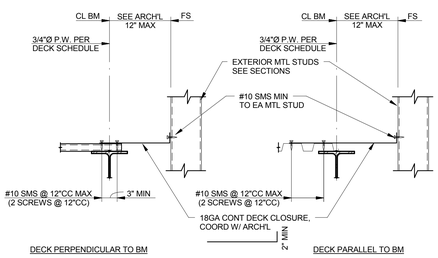

DETAIL 6 S1.03

TYPICAL EDGE AT DECK W/O CONC FILL

541SD007-12

100% CONSTRUCTION DOCUMENTS

HILLIARD ARCHITECTS INC. COPYRIGHT

Revisions:	Date

CONSULTANTS:

Buchler & Buchler Structural Engineers, Inc.
600 Q Street, Suite 200, Sacramento, CA 95811
tel 916.443.0303 fax 916.443.0313

REGISTERED PROFESSIONAL ENGINEER WILLIAM B. RADER No. 3592 STRUCTURAL STATE OF CALIFORNIA

ARCHITECT/ENGINEERS:

ESTABLISHED 1988 HILLIARD ARCHITECTS GOING GREEN

HILLIARD ARCHITECTS, INC
251 Post Street, Suite 620
San Francisco, CA 94108-5017
Tel 415 989 6400, Fax 415 989 3056
www.HilliardArchitects.com

Drawing Title: TYPICAL EXTERIOR METAL STUD DETAILS	Project Title: VAMA MEDICAL SPECIALTIES BUILDING		Project Number: 612-122
Approved: Project Director	Location: VA MATHER		Building Number:
	Date: 05/12/2014	Checked: WBR	Drawing Number: S1.03
		Drawn: Author	Dwg. of

Office of Construction and Facilities Management

Department of Veterans Affairs

VA FORM 08-6231

TYPICAL DETAILS

APPLICABLE TO ALL DRAWINGS UNLESS NOTED OR SHOWN OTHERWISE

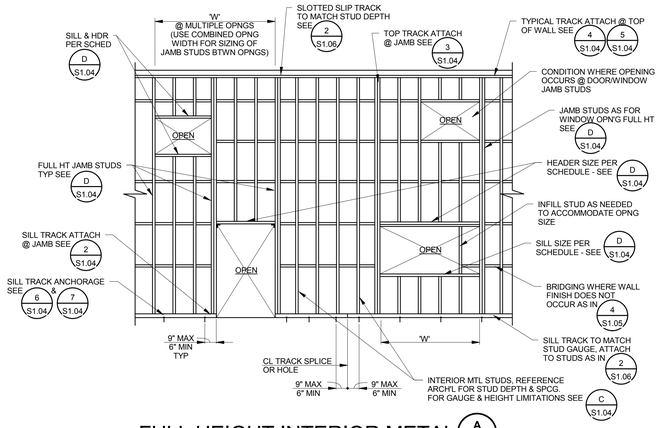

FULL HEIGHT INTERIOR METAL STUD WALL ELEVATION (A S1.04)

5425D001-48

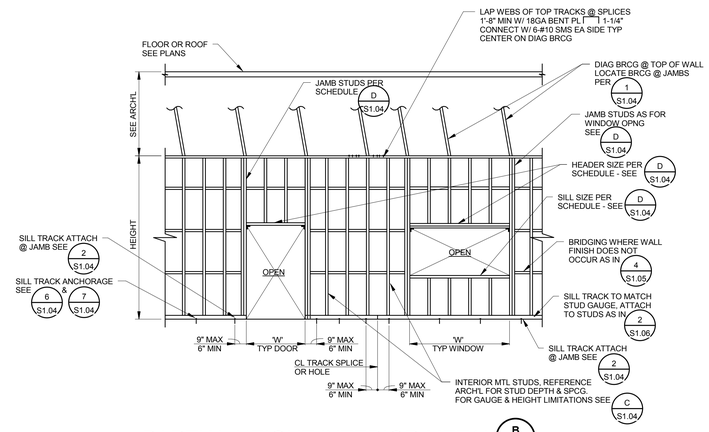

PARTIAL HEIGHT INTERIOR METAL STUD WALL ELEVATION (B S1.04)

5425D012-48

INTERIOR METAL STUD PARTITIONS (C S1.04)

5425D003-1

MAXIMUM HEIGHT FOR METAL STUDS WITH
SDS = 0.75, IP = 1.0
DEFLECTION LIMIT L/120 - NON BEARING WITH CABINET OR EQUIPMENT

16"CC SPACING

DEPTH	GAGE	DESIGNATION [3]	HEIGHT
3 5/8"	20	362S162-33	17'-1"
3 5/8"	18	362S162-43	18'-6"
3 5/8"	16	362S162-54	20'-10"
3 5/8"	14	362S162-68	22'-7"
4"	20	400S162-33	18'-10"
4"	18	400S162-43	20'-11"
4"	16	400S162-54	22'-7"
4"	14	400S162-68	24'-7"
6"	20	600S162-33	25'-7"
6"	18	600S162-43	28'-8"
6"	16	600S162-54	32'-8"
6"	14	600S162-68	35'-10"
8"	20	800S162-33	29'-2"
8"	18	800S162-43	36'-11"
8"	16	800S162-54	42'-1"
8"	14	800S162-68	46'-10"

1. STUDS SHALL BE DEPTH AS INDICATED ON ARCH DRAWINGS AND GAUGE AS DETERMINED BY HEIGHT OF WALL AND THE SCHEDULE ABOVE.
2. SEE ELEVATIONS A S1.04 & B S1.04 FOR TYPICAL WALL FRAMING CONDITIONS.
3. DESIGNATION CONFORMS TO STEEL STUD MANUFACTURERS ASSOCIATION STANDARDS.
4. FOR WALL SUPPORTED CABINET INSTALLATION SEE 6 S1.06
5. THE MAX. HTS NOTED IN THIS TABLE ARE BASED UPON THE USE OF SEISMIC COMPONENT LOAD FP OR A LIVE LOAD OF 5PSF, WHICHEVER GOVERNS.

INTERIOR WALL OPENING FRAMING SCHEDULE (D S1.04)

5425D014-1

DEFLECTION LIMIT = L/120

'W' WIDTH MAX [15]	JAMBS	HEADER	SILL	HC4-8 SCREW SPCG 3-5/8" & 4" WALLS	HC4-8 SCREW SPCG 6" & 8" WALLS
4'-0"	J1 [1,2,3]	H2	S1		
8'-0"	J2	H4	S1 [9]		
12'-0"	J3	HC4-8 [4,5,12]	S2	8"CC	4"CC
16'-0"	J4	HC4-8 [6,7,8,12]	S4 [10]	8"CC	4"CC

1. USE J2 MINIMUM AT DOOR OPENINGS
2. USE J2 AT 4'-0" OPNGS IN 20GA WALLS
3. USE J2 AT 4'-0" OPNGS IN 8"X18GA WALLS
4. H4-6 MAY BE USED AT 12'-0" OPNGS IN 16GA AND 14GA WALLS W/ THE EXCEPTION OF 8" WALLS
5. USE 18GA MIN. HEADERS AT 12'-0" OPNGS IN 8" WALLS
6. USE 16GA MIN. HEADERS AT 16'-0" OPNGS IN 3-5/8" & 4" WALLS
7. USE 14GA MIN. HEADERS AT 16'-0" OPNGS IN 6" & 8" WALLS UNO
8. USE HC4-10 HEADERS AT 16'-0" OPNGS IN 8"X14GA WALLS
9. USE S2 SILLS AT 8'-0" OPNGS IN 3-5/8x20GA, 4"X20GA, AND 6"X20GA WALLS.
10. S2 MAY BE USED AT 16'-0" OPNGS IN 16GA AND 14GA WALLS W/ THE EXCEPTION OF 3-5/8" WALLS
11. SEE SHEET S1.05 FOR JAMB, HEADER, AND SILL DETAILS
12. "H4-8" INDICATES HEADER TYPE AND DEPTH OF VERTICAL STUD ELEMENTS INSIDE HEADER. "HC4-8" INDICATES COMPOSITE HEADER W/ ADD'L SCREW REQUIREMENTS - SEE SCHEDULE & 3 S1.05
13. FOR CONNECTION @ BASE OF WALL AT JAMBS SEE 2 S1.04
14. FOR CONNECTION @ TOP OF WALL AT JAMBS SEE 3 S1.04
15. 'W' WIDTH IS THE MAX WIDTH OF A SINGLE OPENING OR THE COMBINED WIDTH OF SIDE BY SIDE OPENINGS THAT SHARE A SINGLE JAMB STUD CONFIGURATION.

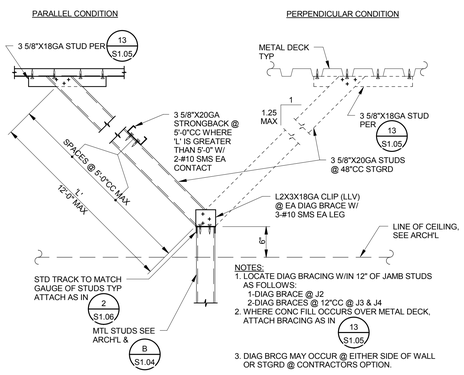

TYPICAL PARTIAL HEIGHT PARTITION WALL BRACING (1 S1.04)

5425D001-12

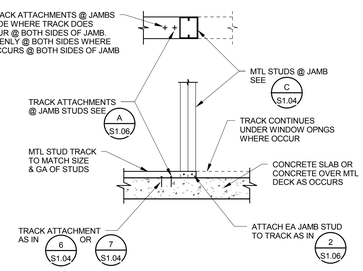

JAMB STUDS @ SILL TRACK (2 S1.04)

5425D002-12

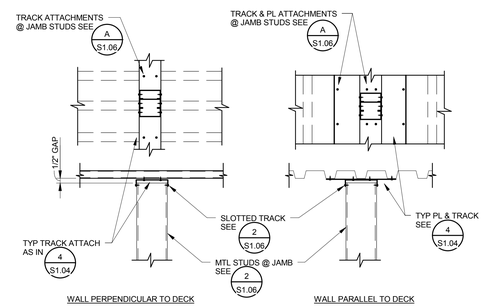

JAMB STUDS @ TOP TRACK (3 S1.04)

5425D003-12

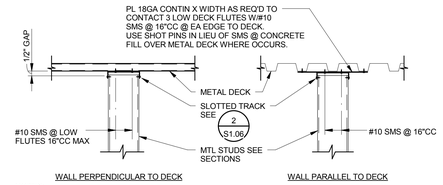

NOTES:

1. WHERE WALL IS PERPENDICULAR TO DECK AND CONCRETE FILL OVER METAL DECK OCCURS ATTACH TRACK TO DECK W/ 1-SHOT PIN W/ STEEL WASHER @ 24"CC MAX IN LIEU OF SMS.
2. WHERE WALL IS PARALLEL TO DECK & WALL CL IS W/IN 1 1/2" OF CL OF LOW DECK FLUTE, TOP TRACK MAY BE ATTACHED DIRECTLY TO DECK AS IN PERPENDICULAR COND & CONTIN E MAY BE OMITTED.
3. SEE SHOT PIN NOTES FOR SPACING, EDGE DISTANCE & PLACEMENT REQUIREMENTS. AT SMS MAINTAIN 1.5 X DIAMETER MIN SPACING & EDGE DISTANCE.
4. FOR COND @ JAMB STUDS SEE 3 S1.03

SLIP TRACK TO METAL DECK W/O FIREPROOFING (4 S1.04)

5425D004-12

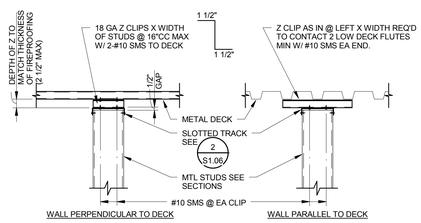

NOTES:

1. WHERE CONC FILL OCCURS OVER METAL DECK, USE SHOT PINS IN LIEU OF SMS.
2. PROVIDE Z CLIPS AS REQ'D FOR FASTENERS @ JAMB STUDS, SEE A S1.06

SLIP TRACK TO METAL DECK W/ FIREPROOFING (5 S1.04)

5425D005-12

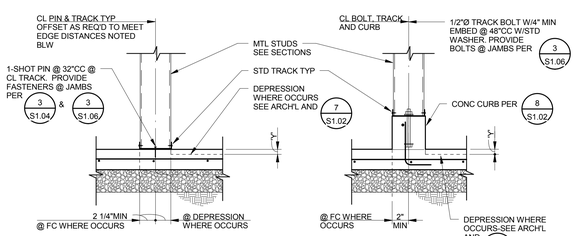

NOTE:
WHERE SLAB DEPRESSION OCCURS, VERIFY DEPTH 'Y', LOCATION & EXTENT W/ ARCH'L. WHERE 'Y' EXCEEDS 2" USE PROVISIONS OF CURB COND.

SILL TRACK TO SLAB (6 S1.04)

5425D006-12

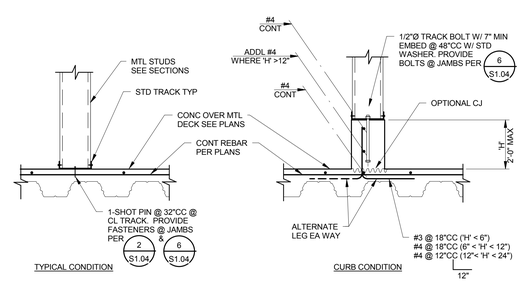

SILL TRACK TO CONCRETE OVER METAL DECK (7 S1.04)

5425D009-12

100% CONSTRUCTION DOCUMENTS

HILLIARD ARCHITECTS INC. COPYRIGHT

Revisions:	Date

CONSULTANTS:

Buehler & Buehler Structural Engineers, Inc.
620 Q Street, Suite 200, Sacramento, CA 95811
tel 916.443.2303 fax 916.443.2313
WILLIAM B. RADER No. 3592 STRUCTURAL

ARCHITECT/ENGINEERS:

HILLIARD ARCHITECTS ESTABLISHED 1988 GOING GREEN

HILLIARD ARCHITECTS, INC
251 Post Street, Suite 620
San Francisco, CA 94108-5017
Tel 415 989 6400, Fax 415 989 3056
www.HilliardArchitects.com

Drawing Title	TYPICAL INTERIOR METAL STUD DETAILS
Approved: Project Director	
Project Title	VAMA MEDICAL SPECIALTIES BUILDING
Location	VA MATHER
Date	05/12/2014
Checked	WBR
Drawn	Author
Project Number	612-122
Building Number	
Drawing Number	S1.04
Dwg. of	

Office of Construction and Facilities Management

Department of Veterans Affairs

VA FORM 08-6231

TYPICAL DETAILS

APPLICABLE TO ALL DRAWINGS UNLESS NOTED OR SHOWN OTHERWISE

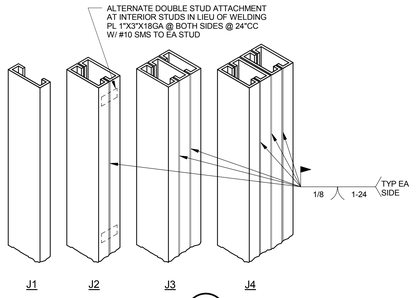

JAMB DETAIL 1/S1.05

S405D001-12

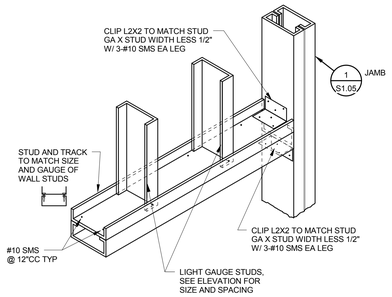

H2 HEADER DETAIL 2/S1.05

S405D002-12

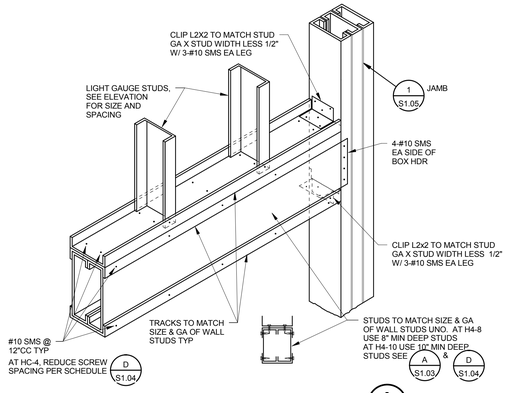

H4/HC-4 HEADER DETAIL 3/S1.05

S405D003-12

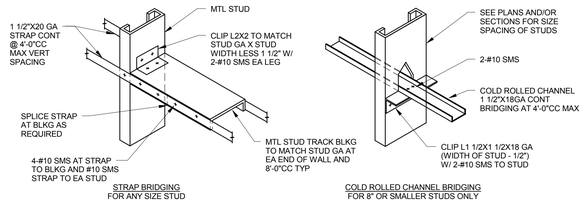

NOTE:
1. BRIDGING FOR 8" AND SMALLER STUDS MAY BE CONSTRUCTED OF COLD ROLLED CHANNEL OR STRAPS AT CONTRACTOR'S OPTION UNLESS NOTED OTHERWISE.
2. WHERE FULL HEIGHT SHEATHING OR GYP BOARD OCCURS ON BOTH SIDES OF METAL STUD FRAMING, THE BRIDGING MAY BE OMITTED.
3. AT COND WHERE STRAP BRIDGING IS USED & WHERE WALL SHEATHING OR GYP BOARD OCCURS ON ONE SIDE OF WALL ONLY, STRAP MAY BE OMITTED ON SIDE OF WALL WHERE SHEATHING OR GYP OCCURS.

TYPICAL STUD BRIDGING 4/S1.05

S405D004-12

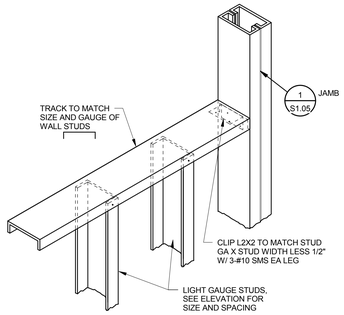

S1 SILL DETAIL 5/S1.05

S405D005-12

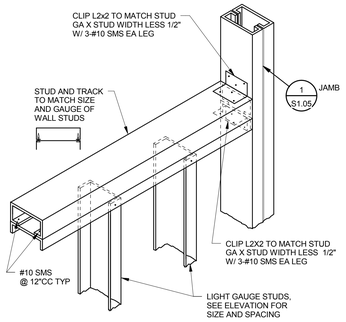

S2 SILL DETAIL 6/S1.05

S405D006-12

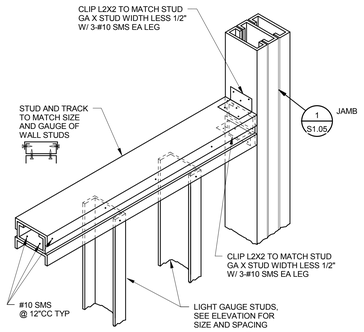

S3 SILL DETAIL 7/S1.05

S405D007-12

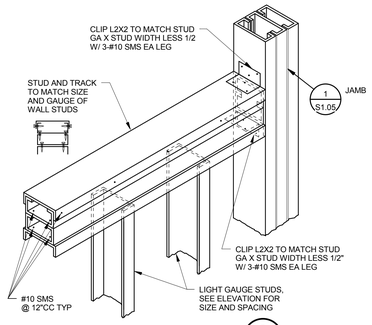

S4 SILL DETAIL 8/S1.05

S405D008-12

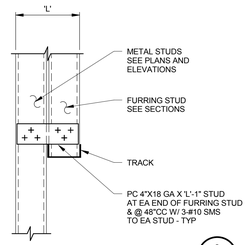

STUD FURRING DETAIL 9/S1.05

S405D009-12

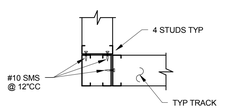

EXTERIOR

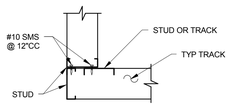

INTERIOR

NOTE: SEE PLANS AND SECTIONS FOR STUD AND TRACK SIZES

TYPICAL WALL CORNER 10/S1.05

S405D010-12

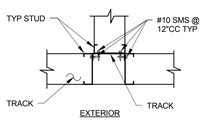

EXTERIOR

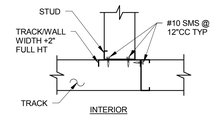

INTERIOR

NOTE: SEE PLANS AND SECTIONS FOR STUD AND TRACK SIZES

TYPICAL TEE INTERSECTION 11/S1.05

S405D011-12

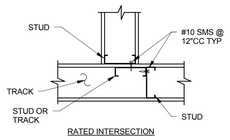

RATED INTERSECTION

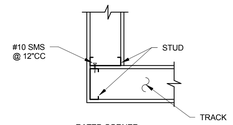

RATED CORNER

NOTE: SEE PLANS AND SECTIONS FOR STUD AND TRACK SIZES
SEE ARCH'L DRAWINGS FOR WALL FINISH CONSTRUCTION

TYPICAL FIRE RATED WALL CORNERS 12/S1.05

S405D012-12

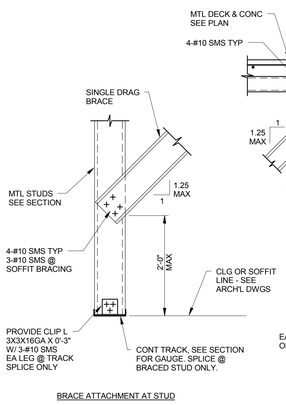

BRACE ATTACHMENT AT STUD

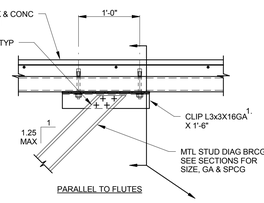

PARALLEL TO FLUTES

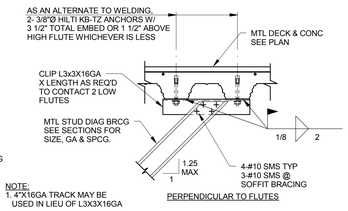

NOTE:
1. 4"X16GA TRACK MAY BE USED IN LIEU OF L3X3X16GA

PERPENDICULAR TO FLUTES

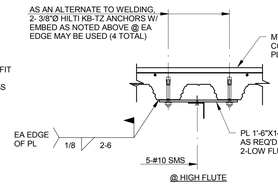

@ HIGH FLUTE

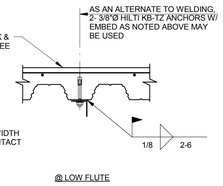

@ LOW FLUTE

BRACE ATTACHMENT AT COMPOSITE DECK

DETAIL 13/S1.05

S405D013-12

METAL STUD BRACING CONNECTIONS AT CONC OVER MTL DECK

HILLIARD ARCHITECTS INC. COPYRIGHT

100% CONSTRUCTION DOCUMENTS

Revisions:	Date

CONSULTANTS:

Buehler & Buehler Structural Engineers, Inc.
600 Q Street, Suite 200, Sacramento, CA 95811
tel 916.443.2303 fax 916.443.2313

WILLIAM B. RADER No. 3592 STRUCTURAL STATE OF CALIFORNIA

ARCHITECT/ENGINEERS:

ESTABLISHED 1988 HILLIARD ARCHITECTS GOING GREEN

HILLIARD ARCHITECTS, INC
251 Post Street, Suite 620
San Francisco, CA 94108-5017
Tel 415 989 6400, Fax 415 989 3056
www.HilliardArchitects.com

Drawing Title	TYPICAL METAL STUD DETAILS
Approved: Project Director	
Project Title	VAMA MEDICAL SPECIALTIES BUILDING
Location	VA MATHER
Date	05/12/2014
Checked	WBR
Drawn	Author
Project Number	612-122
Building Number	
Drawing Number	S1.05
Dwg. of	

Office of Construction and Facilities Management

Department of Veterans Affairs

VA FORM 08-6231

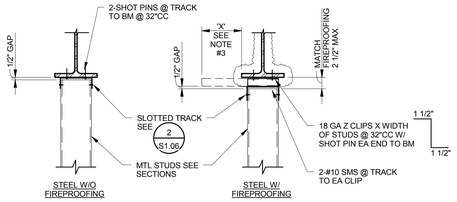

NOTES:

1. PROVIDE Z CLIPS AS REQ'D FOR FASTENERS @ JAMB STUDS SEE A S1.06
2. AT SOFFIT HANGERS, STUDS MAY BE ATTACHED AS SHOWN ABOVE WITH THE FOLLOWING MODIFICATIONS:
   A. USE STD 18 GA DEEP LEG TRACK IN LIEU OF SLIP TRACK. PROVIDE 2-#10 SMS EA SIDE OF HANGER.
   B. WHERE FIREPROOFING OCCURS, USE 14 GA Z CLIPS @ EA HGR. ATTACH TRACK TO CLIPS W/ 3-#10 SMS LOCATED WITHIN 1/2" OF EA EDGE AND AT MIDDLE OF TRACK. ALIGN Z CLIPS W/ HANGERS (±1 1/2").
   C. WHERE NO FIREPROOFING OCCURS, ATTACH TRACK TO BM WITH 2-SHOT PINS @ 16"CC LOCATED WITHIN 1/2" OF EA EDGE OF TRACK. FOR ADDITIONAL INFORMATION @ SUSPENDED SOFFITS SEE 7 S1.06
3. STUDS & HGRS MAY BE OFFSET FROM BM FLANGE UP TO 9" @ STUDS & 6" @ HGRS WITH THE FOLLOWING MODIFICATIONS:
   A. AT STUDS, PROVIDE 16GA Z CLIP & 3 SHOT PINS EVENLY SPACED WHERE 'X'>3".
   B. AT HANGERS, WELD CLIP TO BEAM AS SHOWN, WHERE 'X'>3".

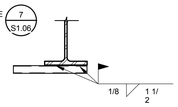

SLIP TRACK TO STEEL BEAM 1 S1.06

5425D006-12

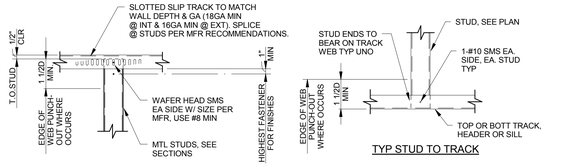

TYP STUD TO SLIP TRACK

TYP STUD TO TRACK

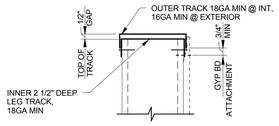

NESTED TRACK ALTERNATE

NOTES:

1. SEE OTHER DETAILS FOR ATTACHMENTS OF T&B TRACK TO STRUCTURE. SCREWS & SHOT PINS @ WEBS OF SLIP TRACKS SHALL BE LOCATED IN SLOTTED HOLES PROVIDED BY M'F'R.
2. FOR ADD'L INFO @ FIRE RATED WALLS, SEE ARCH'L (FOR WALL TYPE, DETAILS ETC...) & M'F'R UL LISTING.
3. D = STUD DEPTH
4. WHERE SLOPE OF SUPPORTING STRUCTURE IS GREATER THAN 1:12, A NESTED TRACK ASSEMBLY SHALL BE USED.

TYPICAL STUD TO TRACK CONNECTION 2 S1.06

5405D014-12

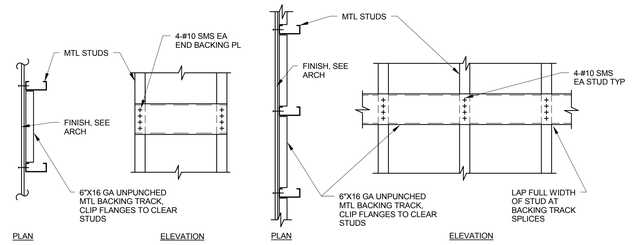

SINGLE BAY CONDITION

CONTINUOUS CONDITION

NOTE: IN LIEU OF TRACK, A 6"X16GA FLAT STRAP MAY BE USED TO SUPPORT LOADS UP TO 20 LBS/FT W A MAX. CONCENTRATED LOAD OF 50 LBS. STRAP SHALL BE CONT OVER 3 STUDS MIN. ATTACH AS NOTED ABOVE.

GC SHALL PROVIDE 6"X16GA FLAT TRACK @ ALL GRAB BAR & HANDRAIL CONNECTIONS.

TYPICAL BACKING DETAIL 3 S1.06

5405D015-12

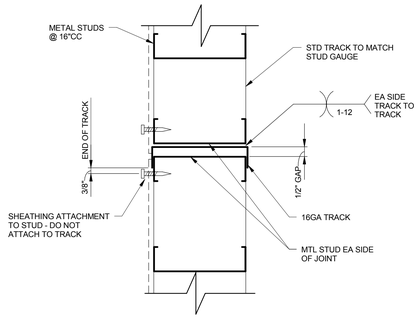

EXPANSION JOINT DETAIL 4 S1.06

5415D006

5405D017-1

A S1.06 TRACK ATTACHMENT @ JAMB STUDS

JAMB TYPE	TRACK ATTACHMENT METHOD 1,2		
	SHOT PIN	SMS	1/2"Ø BOLTS
J1	1	1	1
J2	2	2	1
J3	3	3	1
J4	4	4	2

NOTES:

1. SCHEDULE INDICATES TRACK ATTACHMENTS REQUIRED WHERE JAMB STUDS OCCUR. SEE TYPICAL SILL AND TOP TRACK ATTACHMENT DETAILS FOR BASIC ATTACHMENT METHODS (I.E. SHOT PINS, SMS, BOLTS ETC...) & CONDITIONS BEYOND JAMB STUDS.
2. LOCATE ALL REQUIRED ATTACHMENTS AS CLOSE TO JAMB STUDS AS POSSIBLE. MAINTAIN ALL FASTENER SPACING AND EDGE DISTANCE REQUIREMENTS. AT SHOT PINS, SEE TYPICAL NOTES, @ SMS MAINTAIN 1.5XDIAMETER MIN EDGE DISTANCE & SPCG. AT BOLTS SPACE NO CLOSER THAN 12 DIAMETERS AND NO MORE THAN 9" FROM END OF TRACK.

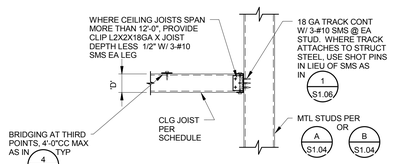

TYPICAL LEDGER CONDITION

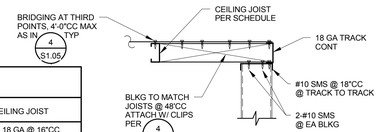

JOIST PARALLEL TO WALL

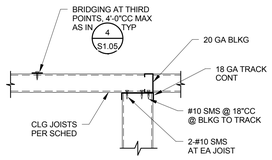

JOIST PERPENDICULAR TO WALL

CEILING JOIST SCHEDULE		
NON-ACCESSIBLE SPAN	ACCESSIBLE SPAN	CEILING JOIST
10'-0" MAX	5'-0" MAX	2 1/2" X 18 GA @ 16"CC
14'-0" MAX	8'-0" MAX	3 5/8" X 18 GA @ 16"CC
19'-0" MAX	10'-0" MAX	6" X 20 GA @ 16"CC
20'-0" MAX	12'-0" MAX	6" X 18 GA @ 16"CC
22'-0" MAX	16'-0" MAX	6" X 16 GA @ 16"CC

1. ALL STUDS & JOISTS ARE 'S' TYPE.
2. WHERE CLG JOISTS ARE SUPPORTED FROM SOFFIT HGRS AS IN 7 S1.06 & CLG JOISTS OCCUR @ BOTH SIDES OF HGRS, JOIST SPANS SHALL NOT EXCEED 8'-0". PROVIDE ADD'L LINES OF HGRS AS REQ'D.

TYPICAL FRAMED CEILING DETAILS 5 S1.06

5425D010-12

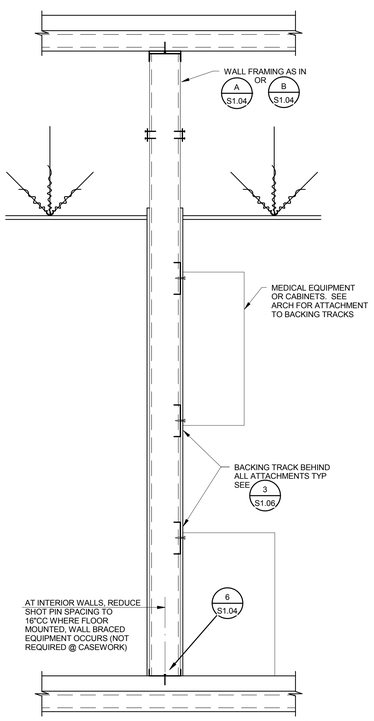

TYPICAL BACKING DETAILS 6 S1.06

5405D016-12

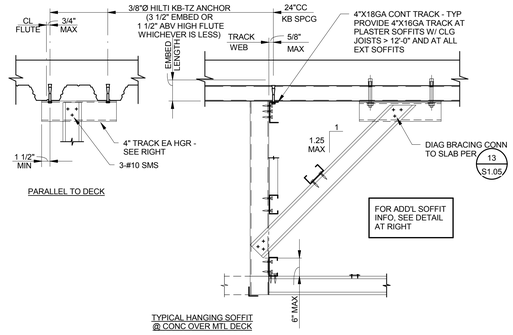

TYPICAL HANGING SOFFIT @ CONC OVER MTL DECK

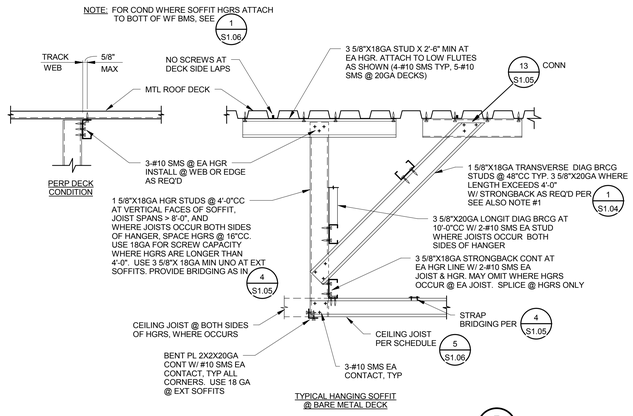

TYPICAL HANGING SOFFIT @ BARE METAL DECK

TYPICAL FRAMED SOFFIT DETAILS 7 S1.06

5405D015-12

NOTES:

1. TRANSVERSE DIAGONAL SOFFIT BRACING NEED ONLY BE INSTALLED ON ONE LINE OF HGR STUDS WHERE SOFFITS ARE LESS THAN 10'-0" IN WIDTH.
2. FRAME OPENINGS IN VERTICAL FACE OF SOFFITS AS IN B S1.04 D S1.04 MAXIMUM OPENING WIDTH = 4'-0"

100% CONSTRUCTION DOCUMENTS

HILLIARD ARCHITECTS INC. COPYRIGHT

Revisions:	Date

CONSULTANTS:

Buehler & Buehler Structural Engineers, Inc.
600 Q Street, Suite 200, Sacramento, CA 95811
tel 916.443.0303 fax 916.443.0313

REGISTERED PROFESSIONAL ENGINEER WILLIAM B. RADER No. 3592 STRUCTURAL STATE OF CALIFORNIA

ARCHITECT/ENGINEERS:

ESTABLISHED 1988 HILLIARD ARCHITECTS GOING GREEN

HILLIARD ARCHITECTS, INC
251 Post Street, Suite 620
San Francisco, CA 94108-5017
Tel 415 989 6400, Fax 415 989 3056
www.HilliardArchitects.com

Drawing Title: TYPICAL METAL STUD DETAILS	Project Title: VAMA MEDICAL SPECIALTIES BUILDING		Project Number: 612-122
Approved: Project Director	Location: VA MATHER		Building Number:
	Date: 05/12/2014	Checked: WBR	Drawing Number: S1.06
		Drawn: Author	Dwg. of

Office of Construction and Facilities Management

Department of Veterans Affairs

VA FORM 08-6231

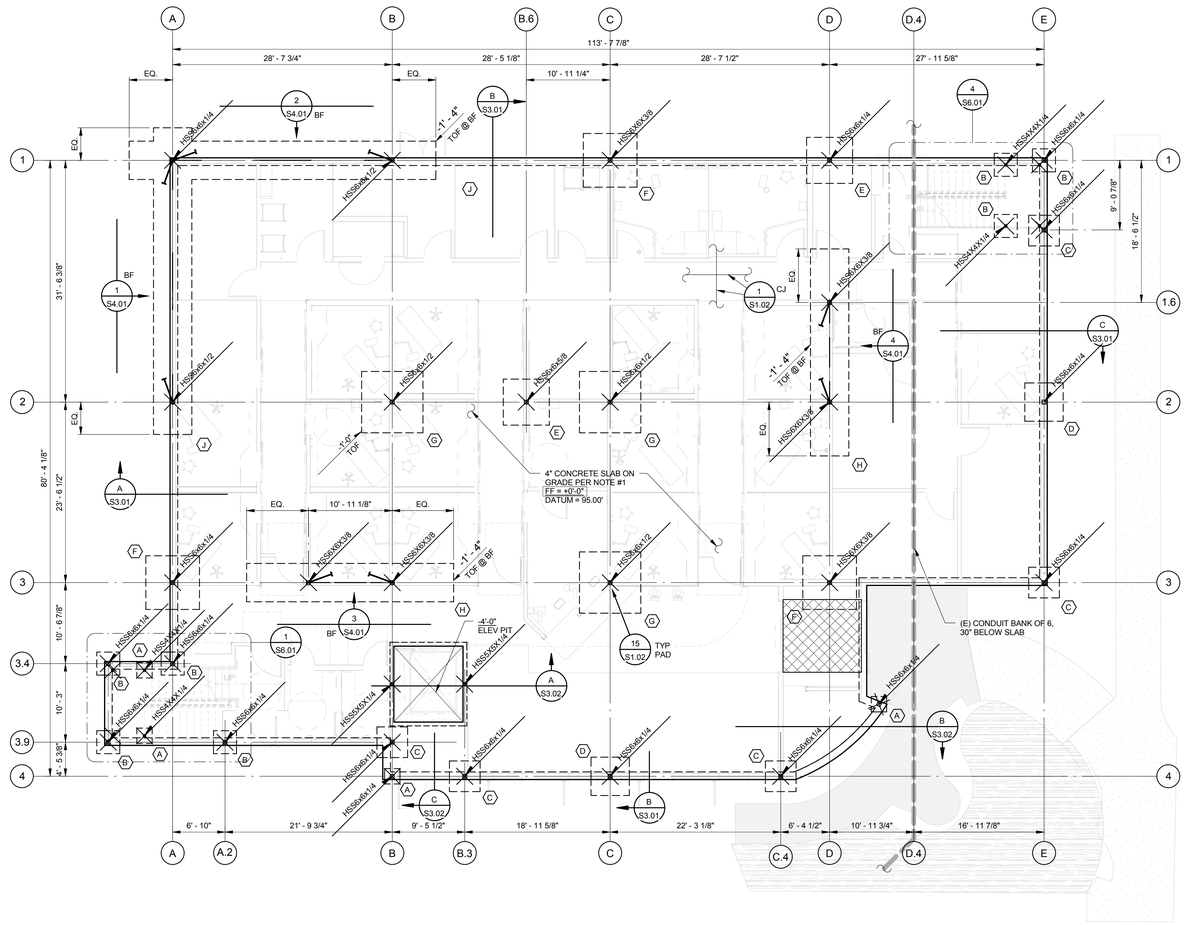

FOUNDATION PLAN — 1/8" = 1'-0"

FOUNDATION PLAN NOTES:

1. SITE PREPARATION AND BUILDING PAD CONSTRUCTION SHALL BE DONE IN ACCORDANCE WITH SOILS REPORT # 9596.01 BY WALLACE KUHL & ASSOC. DATED 12/10/2012. BOTTOM OF FOOTING EXCAVATIONS SHALL BE REVIEWED BY GEOTECHNICAL ENGINEER PRIOR TO PLACEMENT OF REINFORCING STEEL. FOUNDATIONS SHALL BEAR ON COMPACTED EXISTING SOIL OR ENGINEERED FILL PER THE REQUIREMENTS OF THE SOILS REPORT.
2. VERIFY ALL BUILDING DIMENSIONS AND ELEVATIONS W/ ARCH'L DRAWINGS. NOTIFY THE ARCHITECT IMMEDIATELY IF THERE ARE ANY CONFLICTS W/ DIMENSIONS SHOWN.
3. DIMENSIONS SHOWN ARE TO CL OF COLUMN, UNO.
4. VERIFY ELEVATOR PIT DIMENSIONS W/ ELEVATOR MANUFACTURER PRIOR TO CONSTRUCTION.
5. SLAB ON GRADE SHALL BE 5" THICK CONCRETE W/ #4 @ 18"CC EW AT MID-DEPTH. CONCRETE SHALL BE INSTALLED OVER 4" CLEAN CRUSHED ROCK OVER 15 MIL VAPOR RETARDER. TOP OF CONCRETE SLAB IS +0'-0" UNO. DATUM ELEVATION = +95.00'
6. CONTRACTOR SHALL SUBMIT AN EDGE OF SLAB PLAN TO ARCHITECT & STRUCTURAL ENGINEER FOR REVIEW. SUBMITTAL SHALL BE DIMENSIONED AND LOCATED RELATIVE TO STRUCTURAL GRIDS.
7. PROVIDE 3" MIN. CONCRETE COVER AT STRUCTURAL STEEL AND ANCHOR BOLTS BELOW GRADE TYP.
8. PROVIDE SLAB ON GRADE CONTROL JOINTS (SJ) AS INDICATED PER (1/S1.02) TYP @ ALL INTERIOR SLABS. CONSTRUCTION JOINTS (CJ) MAY REPLACE CONTROL JOINTS AS REQUIRED.
9. SEE SHEETS S1.01 THRU S1.06 FOR GENERAL NOTES & TYPICAL DETAILS WHICH ARE APPLICABLE TO ALL DRAWINGS UNO.
10. GUIDE RAIL SUPPORT COLUMNS UNO SHOWN ON PLAN SHALL CONTINUE FULL HEIGHT TO UNDERSIDE OF ROOF STRUCTURE. COORDINATE LOCATION OF COLUMNS WITH ELEVATOR MFR. FOR TYPICAL CONNECTION OF SUPPORT COLUMN TO ELEV. PIT SEE (4/S5.05)
11. IT IS THE CONTRACTOR'S RESPONSIBILITY TO COORDINATE SLAB CONTROL JOINTS WITH ANY ARCHITECTURALLY EXPOSED SLAB AREAS OR THE LOCATION OF TILE CRACK CONTROL JOINTS. VERIFY SPECIAL CONDITION CONTROL JOINTS WITH ARCH'L DRAWINGS.
12. DESIGN, FABRICATION AND INSTALLATION OF MANUFACTURED STAIRS IS BY OTHERS. STAIR DESIGNER TO COORDINATE LOADING OF ADJACENT STRUCTURE W/ SEOR BEFORE COMMENCING DESIGN WORK.
13. PROVIDE THICKENED SLAB @ BASE OF ALL STAIRS PER (-/---)
14. CONTRACTOR TO COORDINATE EXACT DIMENSIONS AND LOCATIONS OF THICKENED SLABS, HOUSEKEEPING PADS , ETC. WITH ALL OTHER DISCIPLINES' DWG'S AS WELL AS WITH THE EQUIPMENT PROVIDED PRIOR TO COMMENCING WORK.
15. SEE ARCH'L & CIVIL DRAWINGS FOR ALL EXTERIOR CURBS, FLATWORK, PLANTERS, RAMPS, ETC.
16. CONTINUE ALL REINFORCING IN CONTINUOUS FOOTINGS THROUGH SPREAD FOOTINGS, TYP, UNO.
17. (MK) INDICATES REFERENCE TO FOOTING SCHEDULE, SEE (A/S2.01)
    (MK) T&B INDICATES THAT ADDITIONAL TOP REINFORCING AS NOTED IN SCHEDULE SHALL BE PLACED @ 2" CLR OF TOP OF FOOTING.
18. INDICATES SLOPED AND/OR DEPRESSED SLAB. DEPRESS BUILDING PAD AND PROVIDE FULL SLAB AND BASE THICKNESS. WHERE DEPRESSION IS GREATER THAN 2" AND ADJACENT TO BUILDING FOUNDATION ELEMENT IT MAY BE NECESSARY TO STEP FOOTING IN ORDER TO MAINTAIN MINIMUM FOOTING EMBEDMENT PER SECTIONS. CONTRACTOR TO COORDINATE IN FIELD. SEE ALSO (7/S1.02)
19. ALL DEPRESSIONS, SLOPES, CURBS, ETC. ARE SHOWN FOR REFERENCE ONLY. FOR EXACT DEPTHS, SLOPES, EXTENTS, ETC, SEE OTHER DISCIPLINES' DRAWINGS.
20. TEMPORARY LOADS APPLIED DURING CONSTRUCTION HAVE NOT BEEN CONSIDERED IN SLAB ON GRADE DESIGN.
21. -1'-0" TOF INDICATES TOP OF FOOTING ELEVATION WITH RESPECT TO REFERENCE TOP OF CONCRETE (+0'-0") THE BOTTOM OF ALL FOOTINGS SHALL BE AT LEAST 24" BELOW ADJACENT MINIMUM PREPARED BUILDING PAD ELEVATION (ON ALL SIDES), TYP UNO AND AS SHOWN ON SECTIONS.
22. S ——— S INDICATES FOOTING STEP PER (2/S1.02) STEP LOCATIONS ARE DIAGRAMMATIC ONLY. CONTRACTOR TO COORDINATE IN FIELD. INTENT IS THAT NO TOP OF FTG IS WITHIN 12" OF EXTERIOR FINISH GRADE.
23. ——— · · · ——— INDICATES EDGE OF MOISTURE CONDITIONED NATIVE SOIL OR ENGINEERED FILL AROUND ENTIRE FOUNDATION FOOTPRINT. PREPARE PER RECOMMENDATIONS OF SOILS REPORT.
24. +2'-0" INDICATES TOP OF CONCRETE SLAB ELEVATION RELATIVE TO REFERENCE T.O. CONCRETE +0'-0".
25. HSS6x6x1/2 INDICATES HSS COLUMN & SIZE. FOR BASE PLATE, SEE (1/S5.01) TYP UNO.
26. INDICATES STEEL BRACED FRAME, SEE ELEVATIONS FOR ADDITIONAL INFO.

(A/S2.01) FOOTING SCHEDULE

MARK	SIZE	REINFORCING
A	2'-0"SQ X 1'-6" DEEP	3-#5 EW (B)
B	3'-0"SQ X 1'-6" DEEP	4-#5 EW (B)
C	4'-0"SQ X 1'-6" DEEP	5-#5 EW (B)
D	5'-0"SQ X 1'-6" DEEP	7-#5 EW (B)
E	6'-0"SQ X 1'-6" DEEP	8-#6 EW (B)
F	7'-0"SQ X 2'-0" DEEP	10-#6 EW (B)
G	8'-0"SQ X 2'-0" DEEP	11-#6 EW (B)
H	5'-0" X 27'-0" X 3'-0" DEEP	7-#7 LONG T&B & #4 @ 12"CC T&B
J	5'-0" X 40'-0" X 3'-0" DEEP	5-#7 LONG T&B & #4 @ 12"CC T&B

NOTE:

1. ALL FOOTINGS SHALL BEAR ON COMPACTED ENGINEERED FILL. SEE SHEET S1.01.
2. ALL REBAR SHALL BE 3" CLEAR FROM SOIL.

100% CONSTRUCTION DOCUMENTS

HILLIARD ARCHITECTS INC. COPYRIGHT

Revisions: | Date

CONSULTANTS:

Buehler & Buehler Structural Engineers, Inc.
620 Q Street, Suite 200, Sacramento, CA 95811
tel 916.443.2303 fax 916.443.2313
WILLIAM B. RADER No. 3592 STRUCTURAL

ARCHITECT/ENGINEERS:

HILLIARD ARCHITECTS ESTABLISHED 1988 GOING GREEN

HILLIARD ARCHITECTS, INC
251 Post Street, Suite 620
San Francisco, CA 94108-5017
Tel 415 989 6400, Fax 415 989 3056
www.HilliardArchitects.com

Drawing Title: FOUNDATION PLAN

Approved: Project Director

Project Title: VAMA MEDICAL SPECIALTIES BUILDING

Location: VA MATHER

Date: 05/12/2014 | Checked: WBR | Drawn: TKK

Project Number: 612-122

Building Number:

Drawing Number: S2.01

Dwg. of

Office of Construction and Facilities Management

Department of Veterans Affairs

VA FORM 08-6231

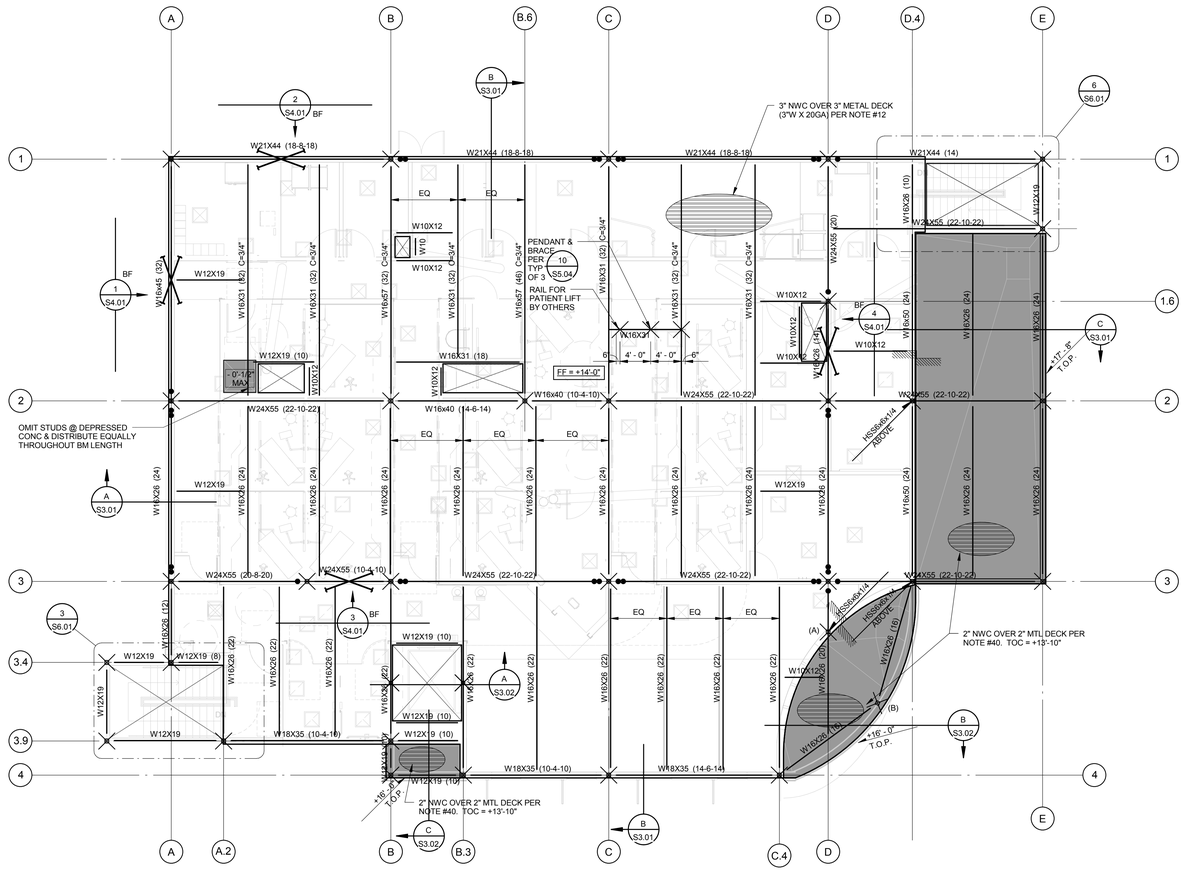

2ND FLOOR FRAMING PLAN — 1/8" = 1'-0"

FLOOR FRAMING PLAN NOTES:

1. VERIFY ALL BUILDING DIMENSIONS AND ELEVATIONS W/ ARCH'L DRAWINGS. NOTIFY THE ARCHITECT IMMEDIATELY IF THERE ARE ANY CONFLICTS W/ DIMENSIONS SHOWN.
2. TOP OF STEEL (TOS) SHALL BE +13'-6" TYP UNO.
3. DIMENSIONS SHOWN ARE TO CL OF COLUMN, UNO.
4. SEE SHEETS S1.01 THRU S1.06 FOR GENERAL NOTES & TYPICAL DETAILS WHICH ARE APPLICABLE TO ALL DRAWINGS UNO.
5. (A) OR (B) — INDICATES COLUMN IS ABOVE ONLY (A) OR BELOW ONLY (B). NO SYMBOL INDICATES THAT COL IS ABOVE AND BELOW.
6. FOR CONNECTION OF ELEVATOR GUIDE RAIL SUPPORT FRAMING TO STRUCTURE SEE 3/S5.05. CONTRACTOR TO COORD LOCATION WITH ELEVATOR INSTALLER.
7. DESIGN, FABRICATION AND INSTALLATION OF MANUFACTURED STAIRS IS BY OTHERS. STAIR DESIGNER TO COORDINATE LOADING OF ADJACENT STRUCTURE W/ SEOR BEFORE COMMENCING DESIGN WORK. FOR ADDITIONAL INFORMATION SEE STAIR NOTES AT SHEET S6.01.
8. SEE SHEETS S5.01-S5.02 FOR TYPICAL STEEL DETAILS.
9. SEE SHEET S5.03 FOR TYPICAL CONCRETE OVER METAL DECK DETAILS.
10. +15'-0" TOS — INDICATES ELEVATION OF TOP OF STEEL FRAMING AND BOTTOM OF METAL DECK.
11. INDICATES CONC OVER METAL DECK. ORIENTATION AS SHOWN ON PLAN. PROVIDE DECK WELDING TO ALL BEAMS PER B/S5.03.
12. CONCRETE OVER METAL DECK CONSTRUCTION SHALL BE 3"X20GA TYPE 3W STEEL FLOOR DECK (TWO SPAN MINIMUM WITHOUT SHORING) WITH MIN 3" NW CONCRETE. REINFORCE CONCRETE WITH #3 @ 18"CC EACH WAY.
13. THE MINIMUM THICKNESS OF CONCRETE OVER METAL DECK SHALL BE AS SPECIFIED ON PLAN. NOTE THAT THE CONCRETE DEPTH WILL VARY DUE TO DECK AND BEAM DEFLECTIONS DURING CONCRETE PLACEMENT, AND SHALL BE CONSIDERED IN THE ESTIMATING OF CONCRETE VOLUME, COST AND PLACEMENT STRATEGIES. SEE SPEC SECTION 053000 SUBSECTIONS 1.4.A.5 AND 2.1.K FOR ADDITIONAL REQUIREMENTS RELATED TO CONCRETE PLACEMENT. FOR ADDITIONAL INFORMATION SEE 11/S5.03.
14. SEE ARCH'L DWGS FOR LOCATION OF ALL SLAB EDGES AT FLOOR PERIMETER AND AROUND OPENINGS. WHERE NOT SHOWN OR INDICATED OTHERWISE ON STRUCTURAL, OR ARCH'L DWGS, BEAMS ADJACENT TO SLAB EDGES SHALL BE 8" FROM CL OF BEAM TO EDGE OF SLAB.
15. NO MECH'L, ELEC'L, PLUMBING OR OTHER NON-STRUCTURAL ITEMS SHALL BE PLACED IN CONCRETE OVER METAL DECK.
16. CONTRACTOR SHALL SUBMIT AN EDGE OF SLAB PLAN TO ARCHITECT & STRUCTURAL ENGINEER FOR REVIEW. SUBMITTAL SHALL BE DIMENSIONED AND LOCATED RELATIVE TO STRUCTURAL GRIDS.
17. W18x35 (32) C=1" — INDICATES BEAM SIZE, NUMBER OF 3/4"Ø WELDED HEADED STUDS, AND UPWARD CAMBER (WHERE NO CAMBER IS SPECIFIED FABRICATE WITH NATURAL MILL CAMBER UP). PROVIDE 3/4"Ø STUDS @ 24"CC MIN AT ALL BEAMS THAT RECEIVE MTL DECK AND CONCRETE, TYP. PROVIDE SPACING OF STUDS AT 12"CC AT ALL BEAMS W/ CONNECTIONS INDICATED AS (● ●● ◆) UNLESS MORE STRINGENT REQUIREMENT IS NOTED ON PLANS.
18. W10 DENOTES W10x12 TYP, UNO.
19. W12 DENOTES W12x14 TYP, UNO.
20. W14 DENOTES W14x22 TYP, UNO.
21. C12 DENOTES C12x20.7 TYP, UNO.
22. ALL BEAMS SHALL BE EQUALLY SPACED BETWEEN DIMENSIONED COLUMNS, GRIDS, OR BEAMS WHERE OCCURS, TYP UNO.
23. FOR TYPICAL BEAM TO BEAM CONNECTION, SEE 1/S5.02 OR 2/S5.02 UNO.
24. FOR TYPICAL BEAM TO COLUMN CONNECTION, SEE 6/S5.01.
28. ● INDICATES SINGLE ROW 'SLIP-CRITICAL' BOLTED CONNECTION PER 4/S5.01 3/S5.02.
29. ●● INDICATES DOUBLE ROW 'SLIP-CRITICAL' BOLTED CONNECTION PER 4/S5.01 3/S5.02.
30. ◆ INDICATES WELDED CONNECTION PER 5/S5.01.
31. LL WELDS AT CONNECTIONS INDICATED AS (● ●● ◆) SHALL BE MADE W/ FILLER METALS IN ACCORDANCE W/ AISC 341 SECTION 7.3A. FOR DEMAND CRITICAL WELD REQUIREMENTS, SEE NOTES ON FRAME DETAIL SHEET S5.06.
32. INDICATES HSS COLUMN. SIZE INDICATED @ BASE LEVEL OF COLUMN ONLY.
33. INDICATES STEEL BRACED FRAME. SEE ELEVATIONS FOR ADD'L INFO. SEE PLAN AND ELEVATION FOR CONFIGURATION.
34. VERIFY ALL FLOOR OPENINGS, LOCATIONS & DIMENSIONS WITH ARCH'L DWGS PRIOR TO FABRICATION AND DETAILING. ALL FLOOR OPENINGS SHALL BE REINFORCED AS SHOWN ON TYPICAL METAL DECK SHEET S5.04. ADD'L WF BLKG MAY BE REQ'D @ FLOOR OPNGS AS SHOWN ON PLAN OR WHERE OPNGS EXCEED PROVISIONS OF TYPICAL DETAILS.
35. CONTRACTOR TO COORDINATE EXACT LOCATION OF FRAMING MEMBERS SUPPORTING MECHANICAL UNITS & SIMILAR ITEMS NOT DIMENSIONED ON PLAN.
36. INDICATES MECHANICAL UNIT. ALL BLOCKING BEAMS SHALL BE W10x12 UNO AND SHALL BE LOCATED DIRECTLY BELOW UNIT EDGES AND/OR CURBS, SEE MECHANICAL UNIT SCHEDULE FOR WEIGHTS AND ATTACHMENT OF UNIT/CURBS TO STRUCTURE. (AHU 1A)
37. DASHED LINE INDICATES BOTTOM FLANGE BRACE. ARROW INDICATES LOW END, SEE 5/S5.02. INTENT IS THAT BRACES ARE EQUALLY SPACED BTWN ADJACENT GIRDERS OR BEAMS, UNO ON PLAN.
    SOLID LINE INDICATES BOTTOM FLANGE BRACING. SEE 4/S5.02.
38. INDICATES SLOPE AND/OR DEPRESSION IN CONCRETE OVER METAL DECK - SEE PLAN FOR DEPTH OF DEPRESSION. SEE ARCH'L DWGS FOR EXACT LOCATION AND EXTENT.
39. ALL VISUALLY EXPOSED STEEL SHALL MEET 'ARCHITECTURALLY EXPOSED STRUCTURAL STEEL' REQUIREMENTS. SEE ARCH'L DWGS AND SPECS.
40. DECK FLOOR SLAB SHALL BE 2" NWC W/ #3 @ 24"CC EA WAY OVER 2"X20 GA 'W-36' METAL DECK WHERE NOTED ON PLAN.

HILLIARD ARCHITECTS INC. COPYRIGHT

100% CONSTRUCTION DOCUMENTS

Revisions:	Date

CONSULTANTS:

Buehler & Buehler Structural Engineers, Inc.
620 Q Street, Suite 200, Sacramento, CA 95811
tel 916.443.2323 fax 916.443.0313

REGISTERED PROFESSIONAL ENGINEER — WILLIAM B. RADER No. 3592 — STRUCTURAL — STATE OF CALIFORNIA

ARCHITECT/ENGINEERS:

HILLIARD ARCHITECTS — ESTABLISHED 1988 — GOING GREEN

HILLIARD ARCHITECTS, INC
251 Post Street, Suite 620
San Francisco, CA 94108-5017
Tel 415 989 6400, Fax 415 989 3056
www.HilliardArchitects.com

Drawing Title	*2ND FLOOR FRAMING PLAN*
Approved: Project Director	
Project Title	*VAMA MEDICAL SPECIALTIES BUILDING*
Project Number	*612-122*
Building Number	
Location	VA MATHER
Date	*05/12/2014*
Checked	*WBR*
Drawn	*Author*
Drawing Number	*S2.02*
Dwg. of	

Office of Construction and Facilities Management
Department of Veterans Affairs

VA FORM 08-6231

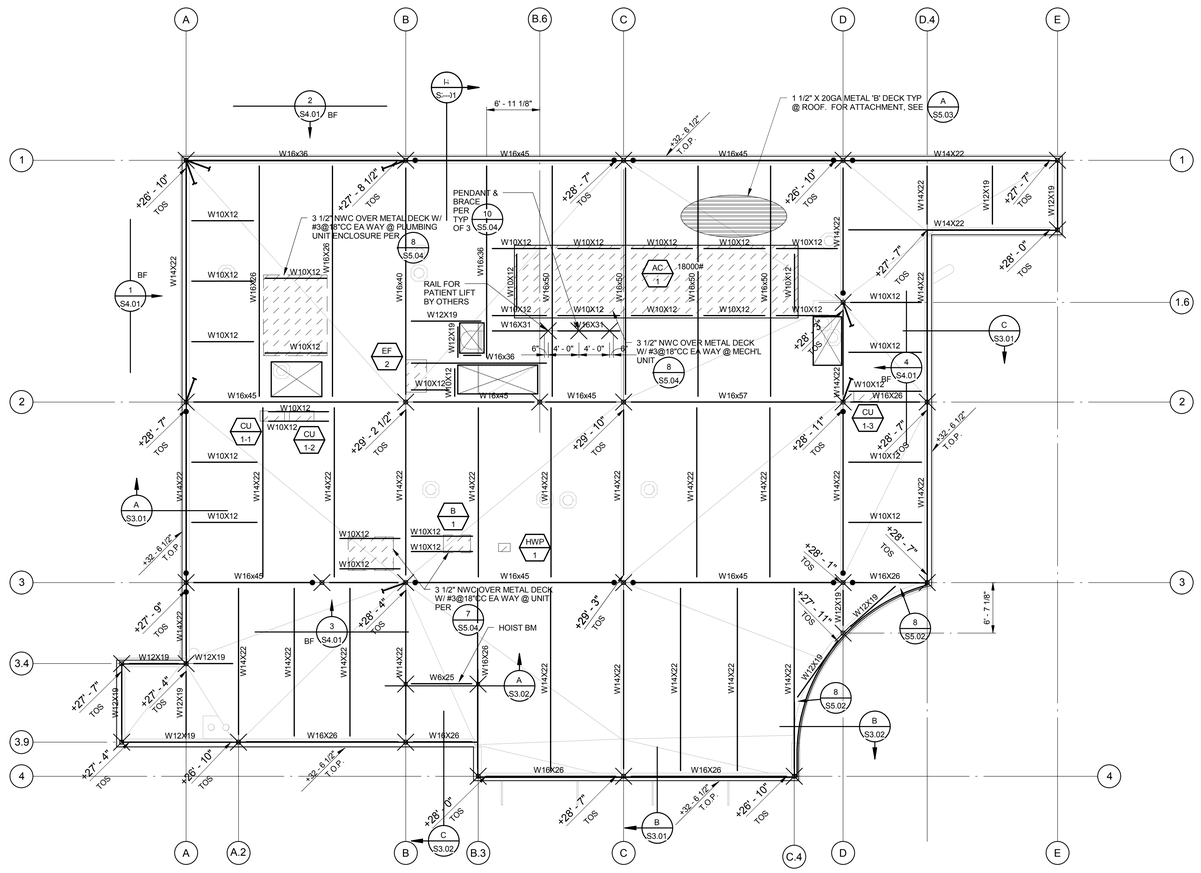

ROOF FRAMING PLAN — 1/8" = 1'-0"

ROOF FRAMING PLAN NOTES:

1. VERIFY ALL BUILDING DIMENSIONS AND ELEVATIONS W/ ARCH'L DRAWINGS. NOTIFY THE ARCHITECT IMMEDIATELY IF THERE ARE ANY CONFLICTS W/ DIMENSIONS SHOWN.
2. DIMENSIONS SHOWN ARE TO CL OF COLUMN, UNO.
3. SEE SHEETS S1.01 THRU S1.06 FOR GENERAL NOTES & TYPICAL DETAILS WHICH ARE APPLICABLE TO ALL DRAWINGS UNO.
4. (A) OR (B) — INDICATES COLUMN IS ABOVE ONLY (A) OR BELOW ONLY (B). NO SYMBOL INDICATES THAT COL IS ABOVE AND BELOW.
5. FOR CONNECTION OF ELEVATOR GUIDE RAIL SUPPORT FRAMING TO STRUCTURE SEE 3/S5.05. CONTRACTOR TO COORD LOCATION WITH ELEVATOR INSTALLER.
6. DESIGN, FABRICATION AND INSTALLATION OF MANUFACTURED STAIRS IS BY OTHERS. STAIR DESIGNER TO COORDINATE LOADING OF ADJACENT STRUCTURE W/ SEOR BEFORE COMMENCING DESIGN WORK. FOR ADDITIONAL INFORMATION SEE STAIR NOTES AT SHEET S6.01.
9. SEE SHEETS S5.01-S5.02 FOR TYPICAL STEEL DETAILS.
10. SEE SHEET S5.03 FOR TYPICAL METAL DECK DETAILS.
11. +15'-0" TOS — INDICATES ELEVATION OF TOP OF STEEL FRAMING AND BOTTOM OF METAL DECK.
12. INDICATES BARE METAL DECK. ORIENTATION AS SHOWN ON PLAN. PROVIDE DECK WELDING TO ALL BEAMS PER B/S5.03
18. W18x35 (32) C=1" — INDICATES BEAM SIZE, NUMBER OF 3/4"Ø WELDED HEADED STUDS, AND UPWARD CAMBER (WHERE NO CAMBER IS SPECIFIED FABRICATE WITH NATURAL MILL CAMBER UP). PROVIDE 3/4"Ø STUDS @ 24"CC MIN AT ALL BEAMS THAT RECEIVE MTL DECK AND CONCRETE, TYP. PROVIDE SPACING OF STUDS AT 12"CC AT ALL BEAMS W/ CONNECTIONS INDICATED AS (● ●● ◆) UNLESS MORE STRINGENT REQUIREMENT IS NOTED ON PLANS.
19. W10 DENOTES W10x12 TYP, UNO.
20. W12 DENOTES W12x14 TYP, UNO.
21. W14 DENOTES W14x22 TYP, UNO.
22. C12 DENOTES C12x20.7 TYP, UNO.
23. ALL BEAMS SHALL BE EQUALLY SPACED BETWEEN DIMENSIONED COLUMNS, GRIDS, OR BEAMS WHERE OCCURS, TYP UNO.
24. FOR TYPICAL BEAM TO BEAM CONNECTION, SEE 1/S5.02 OR 2/S5.02 UNO.
25. FOR TYPICAL BEAM TO COLUMN CONNECTION, SEE 6/S5.01.
28. ● INDICATES SINGLE ROW 'SLIP-CRITICAL' BOLTED CONNECTION PER 4/S5.01 3/S5.02.
29. ●● INDICATES DOUBLE ROW 'SLIP-CRITICAL' BOLTED CONNECTION PER 4/S5.01 3/S5.02.
30. ◆ INDICATES WELDED CONNECTION PER 5/S5.01.
31. ALL WELDS AT CONNECTIONS INDICATED AS (● ●● ◆) SHALL BE MADE W/ FILLER METALS IN ACCORDANCE W/ AISC 341 SECTION 7.3A. FOR DEMAND CRITICAL WELD REQUIREMENTS, SEE NOTES ON FRAME DETAIL SHEET S5.06.
33. INDICATES HSS COLUMN. SIZE INDICATED @ BASE LEVEL OF COLUMN ONLY.
38. INDICATES STEEL BRACED FRAME. SEE ELEVATIONS FOR ADD'L INFO. SEE PLAN AND ELEVATION FOR CONFIGURATION.
39. VERIFY ALL ROOF OPENINGS, LOCATIONS & DIMENSIONS WITH ARCH'L DWGS PRIOR TO FABRICATION AND DETAILING. ALL ROOF OPENINGS SHALL BE REINFORCED AS SHOWN ON TYPICAL METAL DECK SHEET S5.04. ADD'L WF BLKG MAY BE REQ'D @ ROOF OPNGS AS SHOWN ON PLAN OR WHERE OPNGS EXCEED PROVISIONS OF TYPICAL DETAILS.
40. CONTRACTOR TO COORDINATE EXACT LOCATION OF FRAMING MEMBERS SUPPORTING MECHANICAL UNITS & SIMILAR ITEMS NOT DIMENSIONED ON PLAN.
41. AHU 1A — INDICATES MECHANICAL UNIT. ALL BLOCKING BEAMS SHALL BE W10x12 UNO AND SHALL BE LOCATED DIRECTLY BELOW UNIT EDGES AND/OR CURBS, SEE MECHANICAL UNIT SCHEDULE FOR WEIGHTS AND ATTACHMENT OF UNIT/CURBS TO STRUCTURE. MAX WEIGHT NOT TO EXCEED 400# UNO ON PLANS.
43. DASHED LINE INDICATES BOTTOM FLANGE BRACE. ARROW INDICATES LOW END, SEE 5/S5.02. INTENT IS THAT BRACES ARE EQUALLY SPACED BTWN ADJACENT GIRDERS OR BEAMS, UNO ON PLAN.
    SOLID LINE INDICATES BOTTOM FLANGE BRACING. SEE 4/S5.02.
46. ALL VISUALLY EXPOSED STEEL SHALL MEET 'ARCHITECTURALLY EXPOSED STRUCTURAL STEEL' REQUIREMENTS. SEE ARCH'L DWGS AND SPECS.

HILLIARD ARCHITECTS INC. COPYRIGHT

100% CONSTRUCTION DOCUMENTS

Revisions:	Date

CONSULTANTS:

Buehler & Buehler Structural Engineers, Inc.
600 Q Street, Suite 200, Sacramento, CA 95811
tel 916.443.0303 fax 916.443.0313
WILLIAM B. RADER No. 3592 STRUCTURAL REGISTERED PROFESSIONAL ENGINEER STATE OF CALIFORNIA

ARCHITECT/ENGINEERS:

ESTABLISHED 1988 HILLIARD ARCHITECTS GOING GREEN

HILLIARD ARCHITECTS, INC
251 Post Street, Suite 620
San Francisco, CA 94108-5017
Tel 415 989 6400, Fax 415 989 3056
www.HilliardArchitects.com

Drawing Title: ***ROOF FRAMING PLAN***

Approved: Project Director

Project Title: ***VAMA MEDICAL SPECIALTIES BUILDING***

Location: VA MATHER

Date: *05/12/2014* | Checked: *WBR* | Drawn: *Author*

Project Number: *612-122*

Building Number:

Drawing Number: ***S2.03***

Dwg. of

Office of Construction and Facilities Management

Department of Veterans Affairs

VA FORM 08-6231

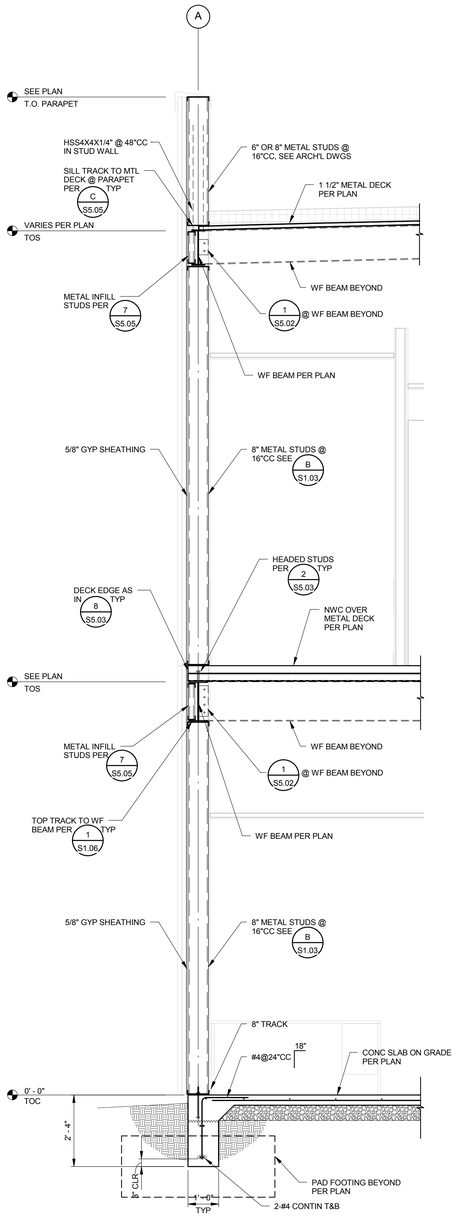

SECTION A S3.01 — 1/2" = 1'-0"

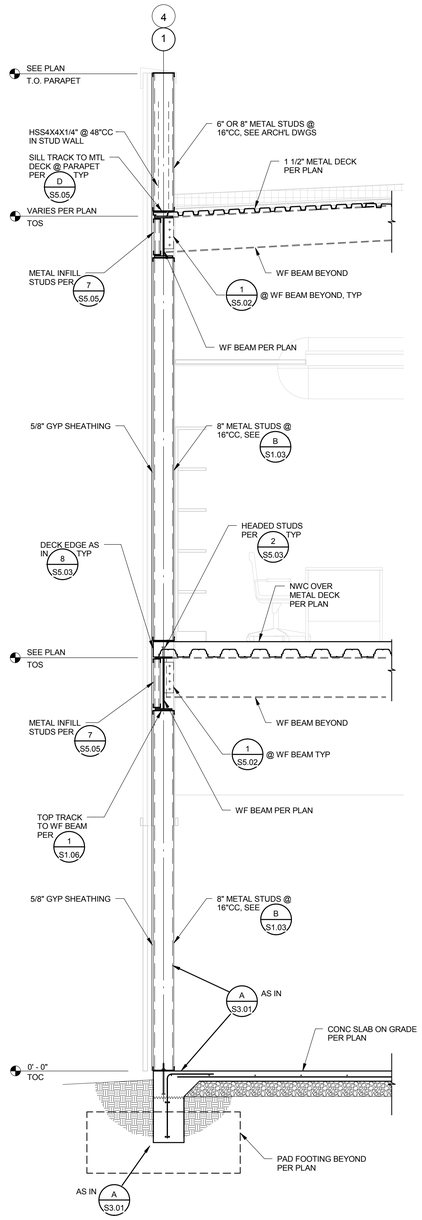

SECTION B S3.01 — 1/2" = 1'-0"

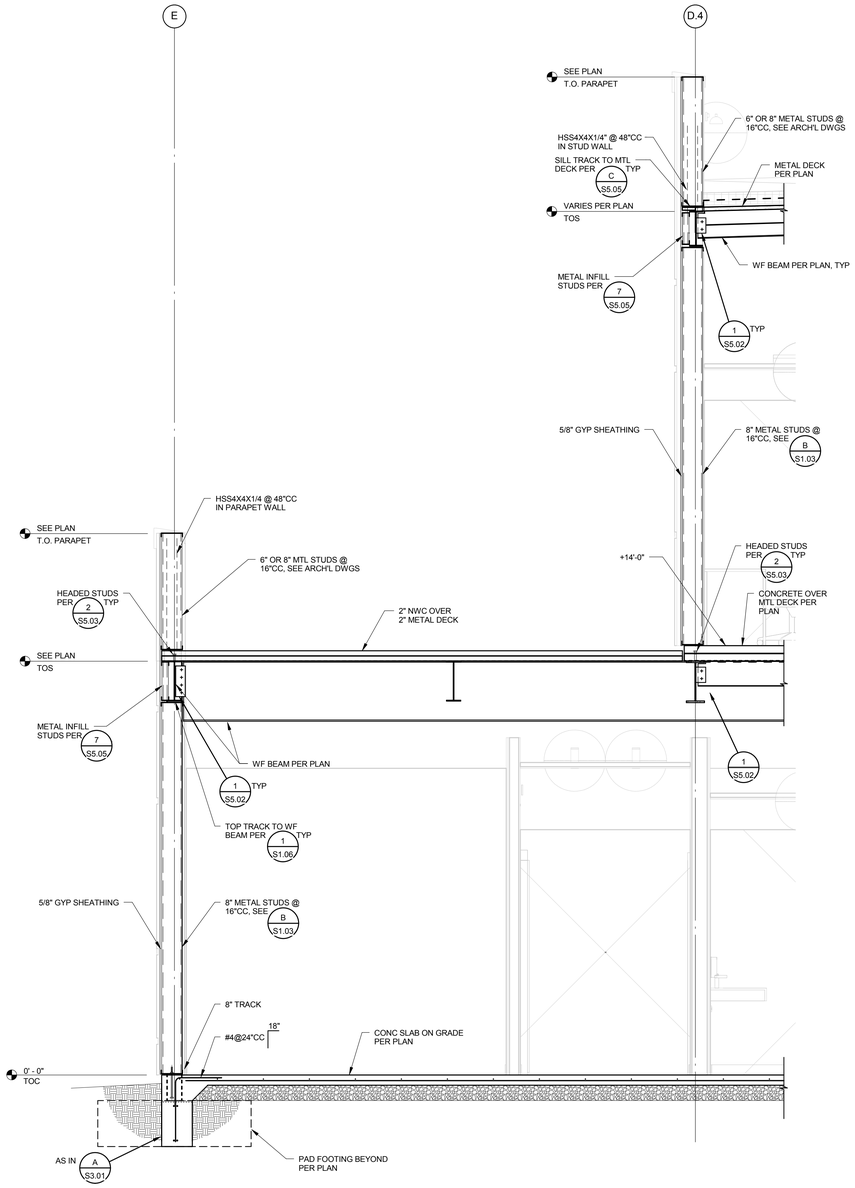

SECTION C S3.01 — 1/2" = 1'-0"

100% CONSTRUCTION DOCUMENTS

HILLIARD ARCHITECTS INC. COPYRIGHT

Revisions:	Date

CONSULTANTS:

Buchler & Buchler
Structural Engineers, Inc.
600 Q Street, Suite 200, Sacramento, CA 95811
tel 916-443-2323 fax 916-443-2313

REGISTERED PROFESSIONAL ENGINEER — WILLIAM B. RADER No. 3592 — STRUCTURAL — STATE OF CALIFORNIA

ARCHITECT/ENGINEERS:

ESTABLISHED 1988 HILLIARD ARCHITECTS GOING GREEN

HILLIARD ARCHITECTS, INC
251 Post Street, Suite 620
San Francisco, CA 94108-5017
Tel 415 989 6400, Fax 415 989 3056
www.HilliardArchitects.com

Drawing Title: ***SECTIONS***

Approved: Project Director

Project Title: ***VAMA MEDICAL SPECIALTIES BUILDING***

Location: VA MATHER

Date: *05/12/2014* | Checked: *WBR* | Drawn: *Author*

Project Number: *612-122*

Building Number:

Drawing Number: ***S3.01***

Dwg. of

Office of Construction and Facilities Management

Department of Veterans Affairs

VA FORM 08-6231

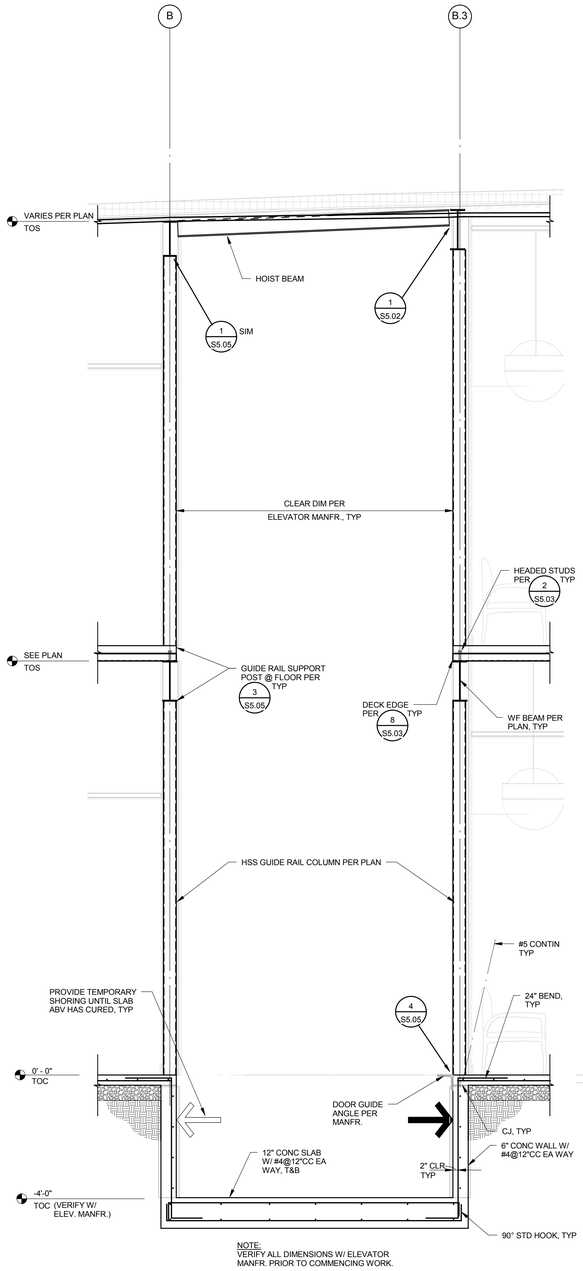

SECTION A S3.02 — 1/2" = 1'-0"

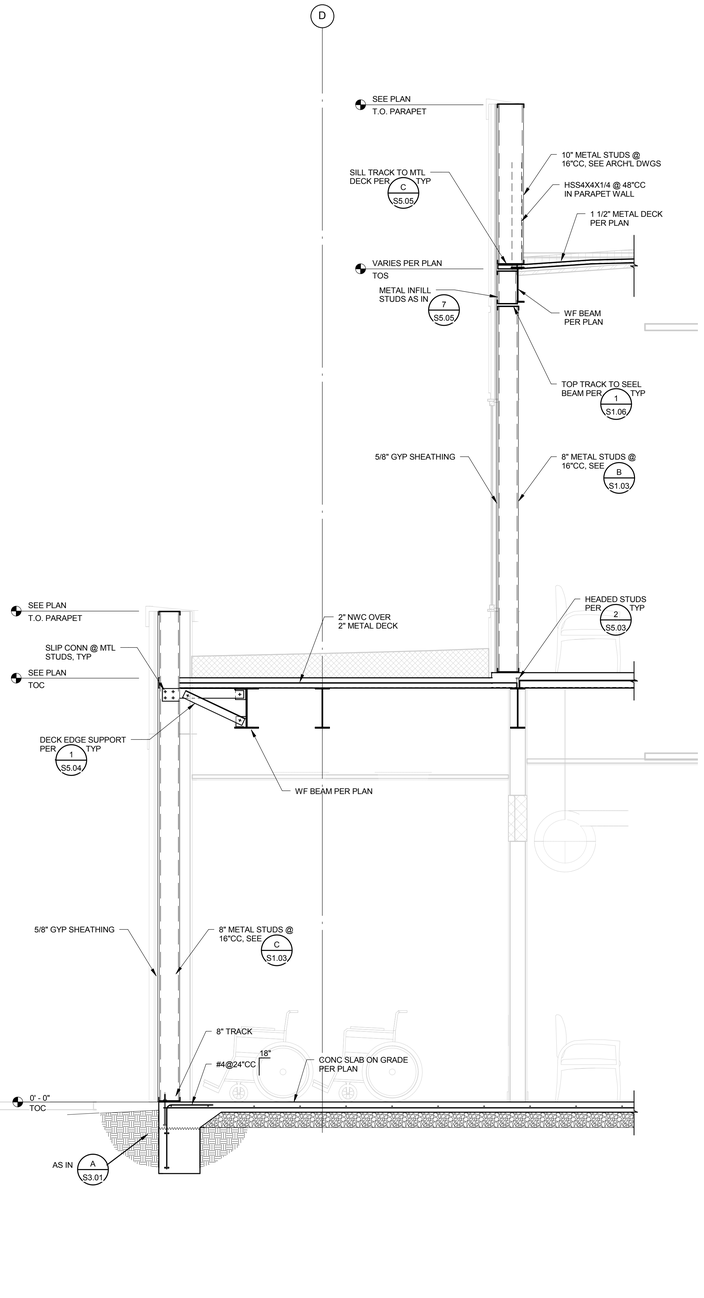

SECTION B S3.02 — 1/2" = 1'-0"

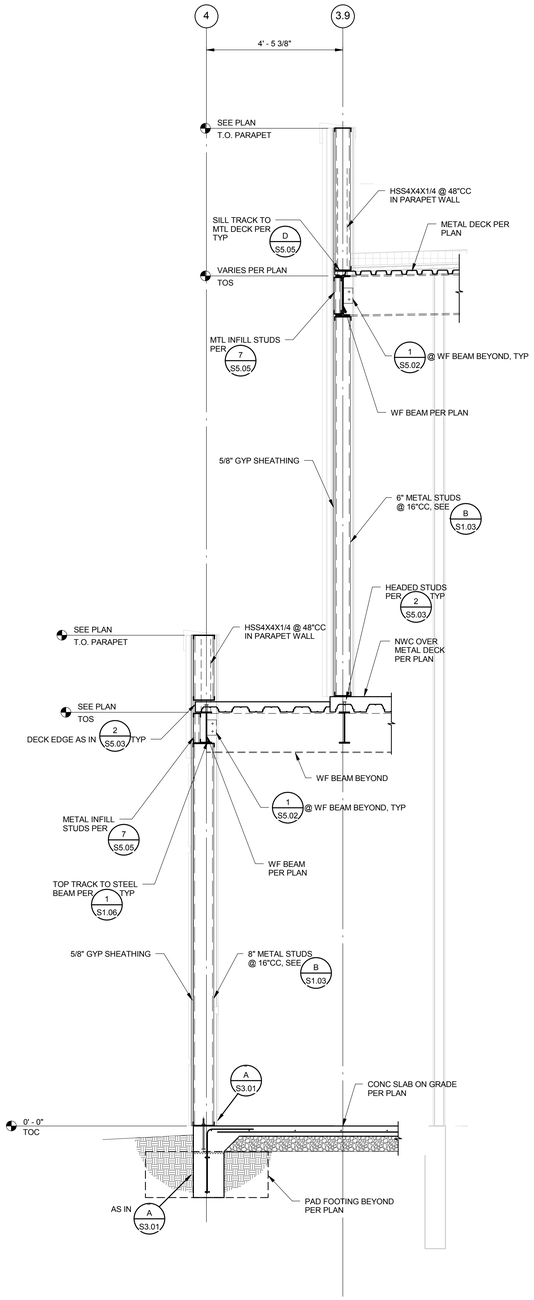

SECTION C S3.02 — 1/2" = 1'-0"

100% CONSTRUCTION DOCUMENTS

HILLIARD ARCHITECTS INC. COPYRIGHT

Revisions:	Date

CONSULTANTS:

Buchler & Buchler Structural Engineers, Inc.
620 Q Street, Suite 200, Sacramento, CA 95811
tel 916.443.0303 fax 916.443.0313

REGISTERED PROFESSIONAL ENGINEER — WILLIAM B. RADER No. 3592 — STRUCTURAL — STATE OF CALIFORNIA

ARCHITECT/ENGINEERS:

ESTABLISHED 1988 HILLIARD ARCHITECTS GOING GREEN

HILLIARD ARCHITECTS, INC
251 Post Street, Suite 620
San Francisco, CA 94108-5017
Tel 415 989 6400, Fax 415 989 3056
www.HilliardArchitects.com

Drawing Title	**SECTIONS**
Approved: Project Director	
Project Title	**VAMA MEDICAL SPECIALTIES BUILDING**
Project Number	**612-122**
Building Number	
Location	VA MATHER
Date	**05/12/2014**
Checked	**WBR**
Drawn	**Author**
Drawing Number	**S3.02**
Dwg. of	

Office of Construction and Facilities Management

Department of Veterans Affairs

VA FORM 08-6231

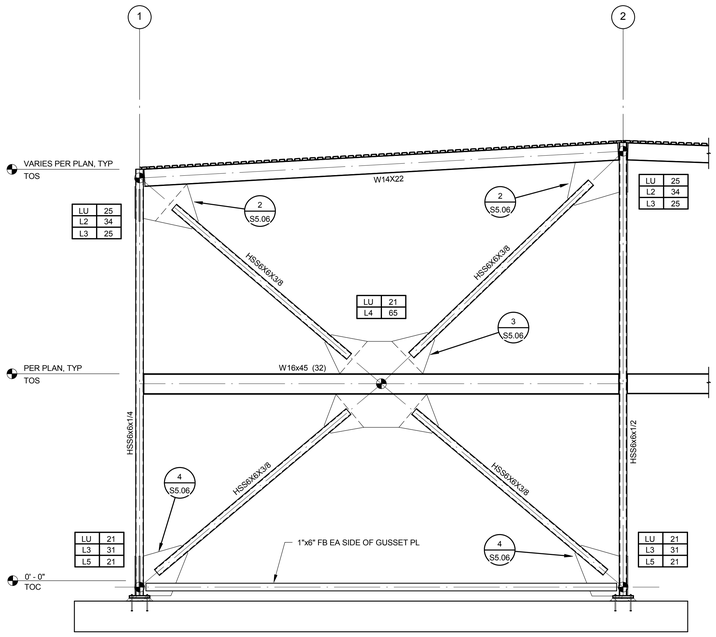

ELEVATION 1 S4.01 — 1/4" = 1'-0"
LINE A

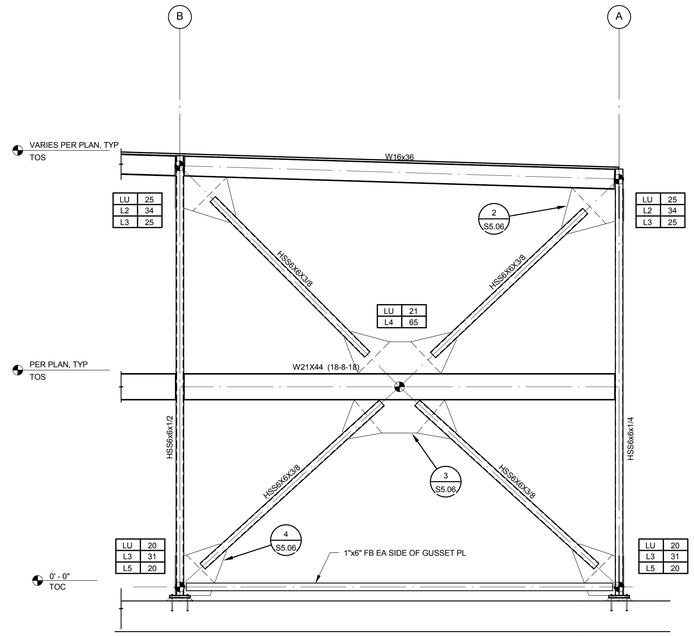

ELEVATION 2 S4.01 — 1/4" = 1'-0"
LINE 1

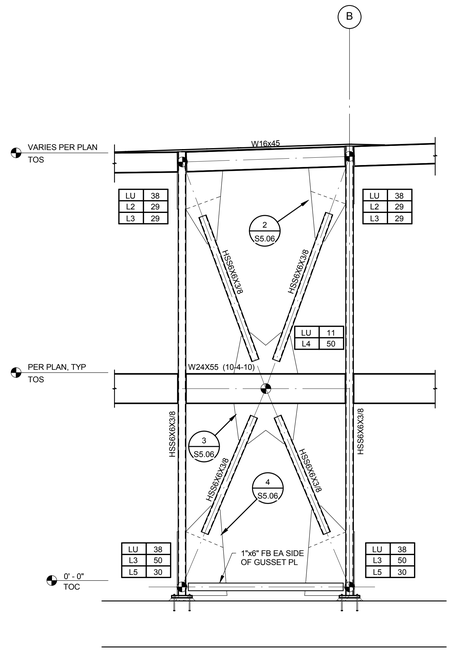

ELEVATION 3 S4.01 — 1/4" = 1'-0"
LINE 3

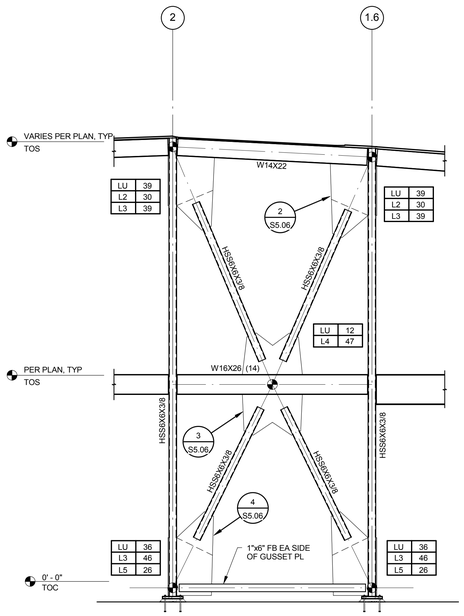

ELEVATION 4 S4.01 — 1/4" = 1'-0"
LINE D

HILLIARD ARCHITECTS INC. COPYRIGHT

100% CONSTRUCTION DOCUMENTS

Revisions:	Date

CONSULTANTS:

Buchler & Buchler
Structural Engineers, Inc.
620 Q Street, Suite 200, Sacramento, CA 95811
tel 916-443-2303 fax 916-443-2313

REGISTERED PROFESSIONAL ENGINEER — WILLIAM B. RADER No. 3592 — STRUCTURAL — STATE OF CALIFORNIA

ARCHITECT/ENGINEERS:

ESTABLISHED 1988 HILLIARD ARCHITECTS GOING GREEN

HILLIARD ARCHITECTS, INC
251 Post Street, Suite 620
San Francisco, CA 94108-5017
Tel 415 989 6400, Fax 415 989 3056
www.HilliardArchitects.com

Drawing Title: ***BRACE FRAME ELEVATIONS***

Approved: Project Director

Project Title: ***VAMA MEDICAL SPECIALTIES BUILDING***

Location: VA MATHER

Date: *05/12/2014* | Checked: *WBR* | Drawn: *Author*

Project Number: *612-122*

Building Number:

Drawing Number: ***S4.01***

Dwg. of

Office of Construction and Facilities Management

Department of Veterans Affairs

VA FORM 08-6231

TYPICAL DETAILS

APPLICABLE TO ALL DRAWINGS UNLESS NOTED OR SHOWN OTHERWISE

A/S5.01 BASE PLATE SCHEDULE

COLUMN SIZE	BASE PLATE SIZE					
	'T'	'A'	'B'	'C'	'D'	'E'
3x3	5/8"	9"	9"	3 1/2"	2"	7"
4x4	5/8"	10"	10"	5"	2 1/2"	7 1/2"
5x5	1"	11"	11"	5 1/2"	3"	8"
6x6	1"	12"	12"	7"	3 1/2"	8 1/2"
7x7	1 1/4"	13"	13"	8"	4"	9"
8x8	1 1/4"	14"	14"	9"	4 1/2"	9 1/2"
10x10	1 1/2"	16"	16"	11"	5 1/2"	10 1/2"
12x12	1 1/2"	18"	18"	13"	6 1/2"	11 1/2"

510S0001-1

NOTES:

1. WELD 'W' SHALL BE 1/4" AT BASE PLATES 3/4" AND LESS, 5/16" AT BASE PLATES GREATER THAN 3/4".

B/S5.01 CONNECTION SCHEDULE

512S0021-1

HSS COLUMN SIZE	STFNR PL'T' (1)	W	BASE PL			
			'A'	'B' (2)	'C'	'D'
3"X3"	1/4"	3/16"	11"	4"	7 1/2"	1/2"
4"X4"	1/4"	1/4"	12"	5"	8 1/2"	5/8"
5"X5"	3/8"	1/4"	13"	6"	9 1/2"	3/4"
6"X6"	3/8"	1/4"	14"	7"	10 1/2"	3/4"
7"X7"	1/2"	1/4"	15"	8"	11 1/2"	3/4"
8"X8"	3/4"	5/16"	15"	9"	12 1/2"	7/8"
10"X10"	3/4"	5/16"	16"	11"	14 1/2"	1"

NOTES:

1. USE PL 'T' FOR LARGEST HSS COLUMN AT CONNECTION
2. 'B' INDICATES THE MINIMUM WIDTH. USE THE GREATER WIDTH OF THE BEAM FLANGE OR THE MINIMUM INDICATED.
3. WHERE BEAM FRAMES INTO COLUMN AT WEB STIFFENER PL, SEE 7/S5.01 OR 3/S5.01 FOR ADDL REQS.
4. WELD 'W' SHALL BE 1/4" AT BASE PLATES 3/4" THICK AND LESS, 5/16" AT BASE PLATES GREATER THAN 3/4" THICK.

C/S5.01 CONNECTION SCHEDULE

512S0016-1

BEAM SIZE	NO. & DIA. A325-N BOLTS	SHR PL 'T'	W
C8 & C10	2- 7/8"Ø	1/4"	1/4"
W8 & W10	2- 7/8"Ø	1/4"	1/4"
C12, W12 & W14	3- 7/8"Ø	3/8"	1/4"
W16	4- 7/8"Ø	3/8"	5/16"
W18	5- 7/8"Ø	3/8"	5/16"
W21	5- 7/8"Ø	3/8"	5/16"
W24	6- 7/8"Ø	1/2"	3/8"
W27	7- 7/8"Ø	1/2"	3/8"

1. SHEAR PL 'T' IS MINIMUM. USE GREATER THICKNESS AS REQUIRED BY DETAILS.

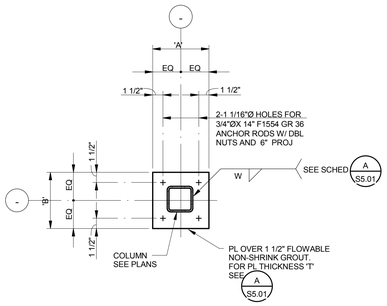

DETAIL 1/S5.01

510S0002-12

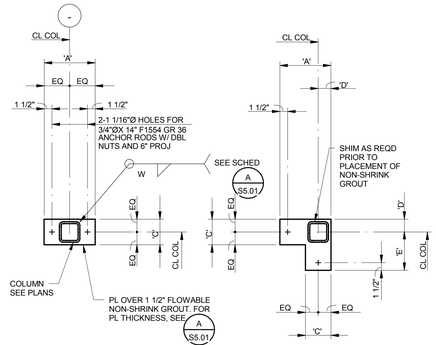

NOTE: CONTRACTOR SHALL REVIEW AND PROVIDE ADEQUATE LATERAL BRACING OF COLUMN DURING ERECTION.

DETAIL 2/S5.01

510S0004-12

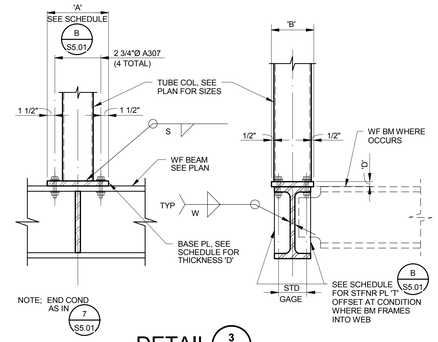

DETAIL 3/S5.01

HSS ABOVE TO TRANSFER BEAM BELOW

512S0019-12

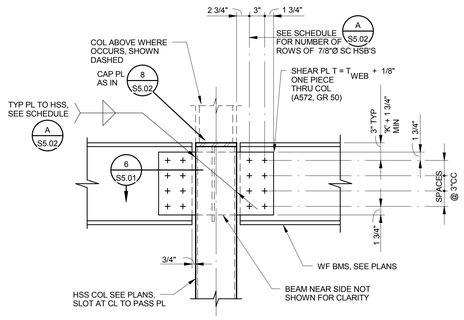

NOTE: SIMILAR CONDITION AT 1-ROW SC SEISMIC CONNECTION WHERE INDICATED ON PLAN BY MK ●

DETAIL 4/S5.01

SEISMIC TIE WF BEAM TO HSS COLUMN

512S0026-12

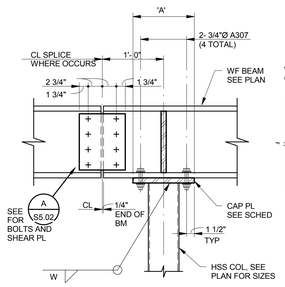

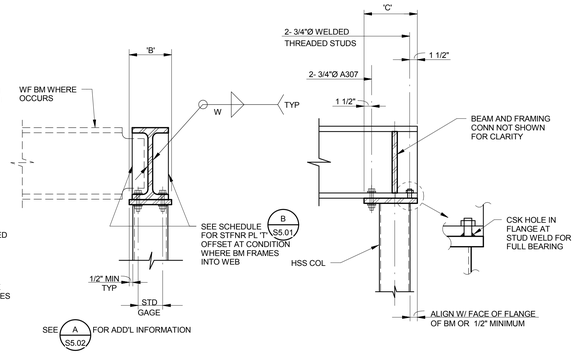

DETAIL 7/S5.01

BEAM OVER HSS COLUMN

512S0020-12

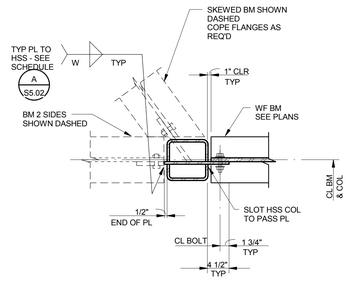

BEAM ONE OR TWO SIDES

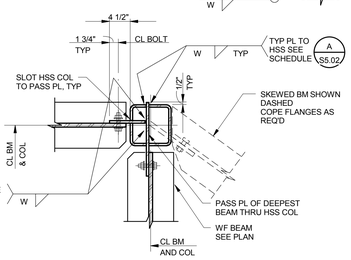

BEAM TWO SIDES

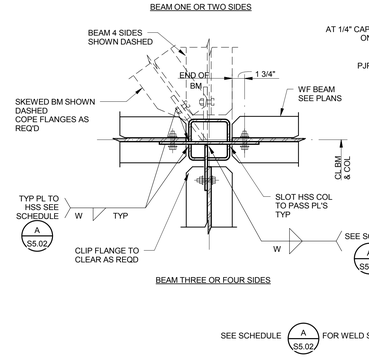

BEAM THREE OR FOUR SIDES

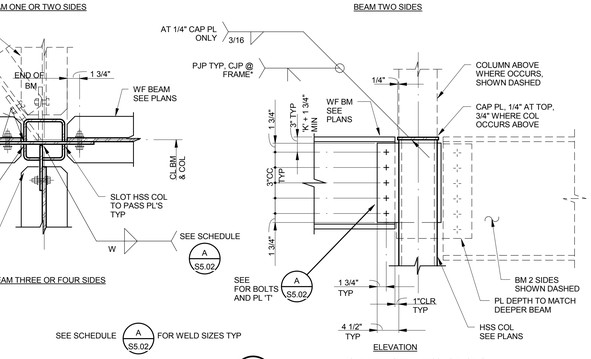

ELEVATION

*CJP WELD @ FRAME COL SPLICE IS A DEMAND CRITICAL WELD TO BE PERFORMED IN ACCORDANCE W/ AISC 341 SECTION 7.3B AND APPENDIX W6

DETAIL 6/S5.01

510S0011-12

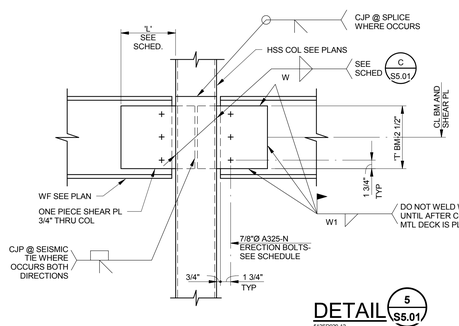

WF SIZE	PL LENGTH 'L'	W1	# OF BOLTS
W16	10"	3/8	3
W18	10"	3/8	3
W21	12"	3/8	3

NOTES:

1. HSS SLOT WIDTH = PL 'T' + 1/8" MAX.
2. ALL PL'S SHALL BE A572 GR. 50.

DETAIL 5/S5.01

512S0029-12

WELDED SEISMIC TIE @ HSS COL

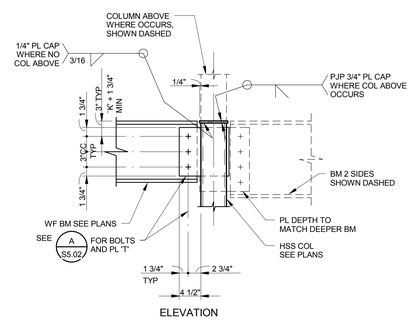

ELEVATION

DETAIL 8/S5.01

512S0012-12

HILLIARD ARCHITECTS INC. COPYRIGHT

100% CONSTRUCTION DOCUMENTS

Revisions:	Date

CONSULTANTS:

Buchler & Buchler Structural Engineers, Inc.
600 Q Street, Suite 200, Sacramento, CA 95811
tel 916.443.0303 fax 916.443.0313

REGISTERED PROFESSIONAL ENGINEER WILLIAM B. RADER No. 3592 STRUCTURAL STATE OF CALIFORNIA

ARCHITECT/ENGINEERS:

ESTABLISHED 1988 HILLIARD ARCHITECTS GOING GREEN

HILLIARD ARCHITECTS, INC
251 Post Street, Suite 620
San Francisco, CA 94108-5017
Tel 415 989 6400, Fax 415 989 3056
www.HilliardArchitects.com

Drawing Title	***TYPICAL STEEL DETAILS***
Approved: Project Director	
Project Title	***VAMA MEDICAL SPECIALTIES BUILDING***
Project Number	***612-122***
Building Number	
Location	VA MATHER
Date	***05/12/2014***
Checked	***WBR***
Drawn	***Author***
Drawing Number	***S5.01***
Dwg. of	

Office of Construction and Facilities Management

Department of Veterans Affairs

VA FORM 08-6231

CONNECTION SCHEDULE

A / S5.02 — 5135D001-1

BEAM SIZE	NO. & DIA. A325-N BOLTS	SHR Ê 'T'	W	MAX. LOAD CAPACITY [2]
C8 & C10	2 - 7/8"Ø	1/4"	3/16"	26.1 K
W8 & W10	2 - 7/8"Ø	1/4"	3/16"	26.1 K
W12 & W14	3 - 7/8"Ø	1/4"	3/16"	39.1 K
W16	4 - 7/8"Ø	3/8"	1/4"	78.3 K
W18	5 - 7/8"Ø	3/8"	1/4"	97.9 K
W21	5 - 7/8"Ø	3/8"	1/4"	97.9 K
W24	6 - 7/8"Ø	3/8"	1/4"	117K
W27	7 - 7/8"Ø	3/8"	1/4"	137 K
W30	8-1"Ø	3/8"	5/16"	152K
W33	9-1"Ø	1/2"	3/8"	227 K
W36	10-1"Ø	5/8"	3/8"	275 K

1. THIS SCHEDULE APPLIES TO NON-FRAME CONNECTIONS, TYPICAL.
2. LRFD LOAD CAPACITY PER AISC MANUAL 13TH ED., TABLE 10-9A.

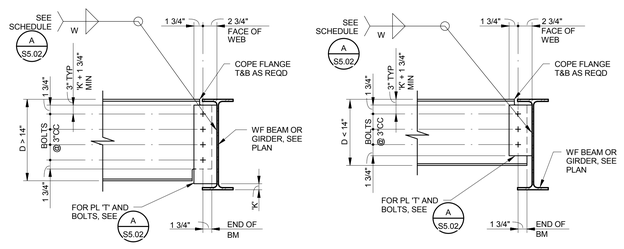

NOTE:
CONTRACTOR MAY USE HORIZONTAL SHORT SLOTTED HOLES FOR THESE CONNECTIONS ONLY. THE SHORT SLOTTED HOLES SHALL BE IN THE SHEAR PL WITH HARDENED WASHERS PROVIDED OVER THE SLOTS. TYPE 'N' BEARING CONNECTIONS SHALL BE USED.

DETAIL 1 / S5.02
5135D002-12
BEAM TO BEAM - ONE SIDE

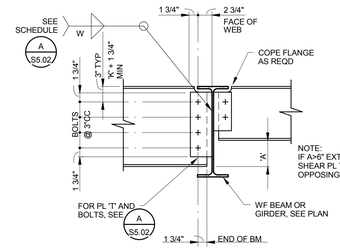

NOTE:
IF A>6" EXTEND SHEAR PL TO MATCH OPPOSING SHEAR PL

NOTE: CONTRACTOR MAY USE HORIZONTAL SHORT SLOTTED HOLES FOR THESE CONNECTIONS ONLY. THE SHORT SLOTTED HOLES SHALL BE IN THE SHEAR PL WITH HARDENED WASHERS PROVIDED OVER THE SLOTS. TYPE 'N' BEARING CONNECTIONS SHALL BE USED UNO ON THE DRAWINGS.

DETAIL 2 / S5.02
5135D003-12
BEAM TO BEAM - TWO SIDES

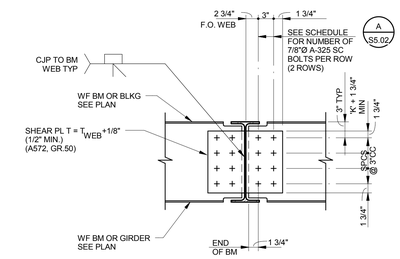

NOTE: SIMILAR CONDITION AT 1-ROW SC SEISMIC CONNECTION WHERE INDICATED ON PLAN BY MK

DETAIL 3 / S5.02
5135D013-12
SEISMIC TIE @ WF BM OR GIRDER

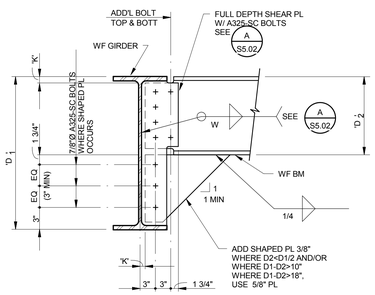

NOTE: WHERE BEAMS FRAME INTO GIRDER FROM BOTH SIDES, THE REQUIREMENTS OF THIS DETAIL NEED ONLY APPLY TO ONE BEAM UNO

DETAIL 4 / S5.02
5135D010-12

*NOTE: WHERE BEAM SPCG EXCEEDS 15'-0", ATTACH UPPER END OF ANGLE BRACE TO DECK UNDERSIDE PER A S5.02

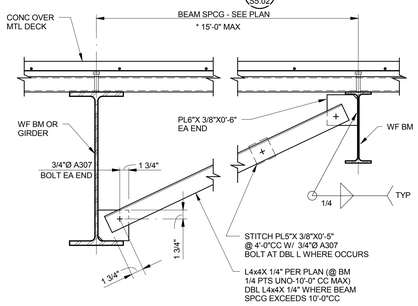

DETAIL 5 / S5.02
5135D012-12

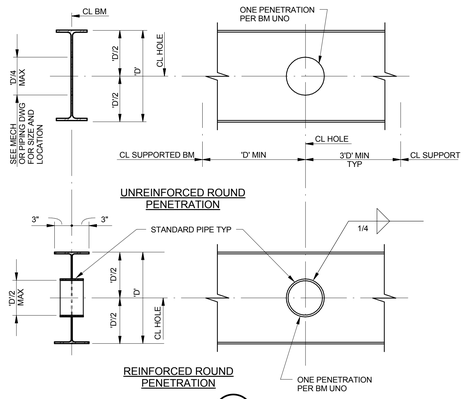

DETAIL 6 / S5.02
5145D005-12

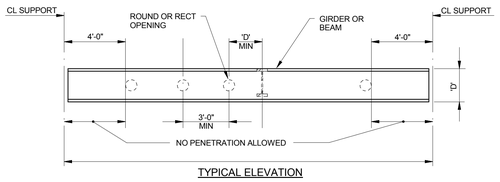

TYPICAL ELEVATION

NOTES:

1. NO PENETRATIONS OF ANY KIND ALLOWED IN MEMBERS SMALLER THAN W27
2. NO REINFORCED PENETRATIONS ALLOWED EXCEPT AS NOTED ON THE DRAWING.

DETAIL 7 / S5.02
5145D006-12

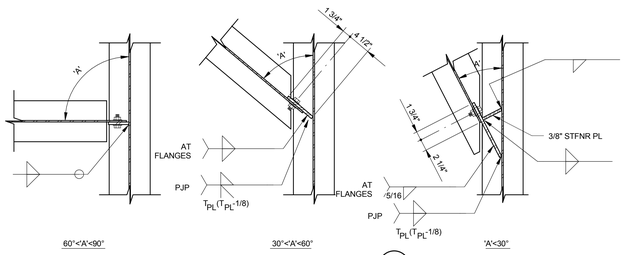

NOTES:

1. FOR SHEAR PL, FILLET WELDS, AND BOLTS, SEE A S5.02
2. FOR DIMENSIONS AND SPACING NOT SHOWN, SEE 1 S5.02
3. FILLET WELDING AT BM WEBS SHALL CONFORM TO AWS D1.1 3.9.3 INCREASE WELD SIZE AS REQUIRED BY ROOT OPENING AND SHEAR PLATE END PREP TO MAINTAIN EFFECTIVE THROAT.

DETAIL 8 / S5.02
BEAM TO BEAM - ONE SIDE SKEWED
5135D015-12

HILLIARD ARCHITECTS INC. COPYRIGHT

100% CONSTRUCTION DOCUMENTS

Revisions:	Date

CONSULTANTS:

Buehler & Buehler Structural Engineers, Inc.
620 Q Street, Suite 200, Sacramento, CA 95811
tel 916.443.0303 fax 916.443.0313
REGISTERED PROFESSIONAL ENGINEER — WILLIAM B. RADER No. 3592 — STRUCTURAL — STATE OF CALIFORNIA

ARCHITECT/ENGINEERS:

ESTABLISHED 1988 HILLIARD ARCHITECTS GOING GREEN

HILLIARD ARCHITECTS, INC
251 Post Street, Suite 620
San Francisco, CA 94108-5017
Tel 415 989 6400, Fax 415 989 3056
www.HilliardArchitects.com

Drawing Title: TYPICAL STEEL DETAILS	Project Title: VAMA MEDICAL SPECIALTIES BUILDING		Project Number: 612-122
Approved: Project Director	Location: VA MATHER		Building Number
	Date: 05/12/2014	Checked: WBR	Drawing Number: S5.02
		Drawn: Author	Dwg. of

Office of Construction and Facilities Management
Department of Veterans Affairs

VA FORM 08-6231

S305D001-1

A / S5.03 DECK WELDING SCHEDULE

DECK TYPE	DEPTH & GAUGE	PERPENDICULAR SUPPORTS	PARALLEL SUPPORTS	SIDE LAPS	DIAPHRAGM SHEAR CAPACITY
3W-36 FLOOR DECK	3"X 20 GA	4 PW PER SHEET	PW @ 12" CC	BP @ 36" CC	1977 #/'
2W-36 FLOOR DECK	2"X 20 GA	4 PW PER SHEET	PW @ 12" CC	BP @ 36" CC	1677 #/'
B-36 ROOF DECK	1 1/2"X 20 GA	7 PW PER SHEET	PW @ 12" CC	TSW @ 24" CC	961 #/'

1. PW= 3/4" DIAMETER (1/2" EFFECTIVE DIAMETER) PUDDLE WELD ; TSW= 1 1/2" MIN TOP SEAM WELD ; BP= BUTTON PUNCH
2. METAL DECK SHALL BE VERCO OR APPROVED EQUAL, OF TYPE AND GAUGE SHOWN ON PLANS AND WELDED AS SHOWN ABOVE.
3. AT COMPOSITE FLOOR DECKS, 3/4"Ø SHEAR STUDS MAY SUBSTITUTE FOR 3/4"Ø PUDDLE WELDS.
4. SEE B/S5.03 FOR TYPICAL WELD PATTERNS.
5. SEE 1/S5.03 FOR METAL DECK WELDING AT STRUCT STEEL SUPPORTS.
6. ALL METAL DECK SHALL HAVE TWO SPANS MINIMUM.
7. PROVIDE SHORING AS REQUIRED AT ALL DECKS PER MFR RECOMMENDATIONS.

S305D002-1

B / S5.03 METAL DECK WELD PATTERNS

DECK TYPE	PROFILE	NO. 3/4"Ø PW PER SHEET
TYPE 3W36 OR TYPE 2W36	36"	4
TYPE B36	36"	7

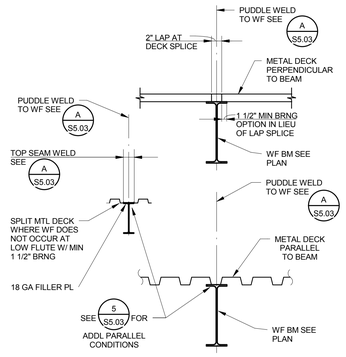

NOTE: PROVIDE 2 ROWS OF PW AT ALL DRAG LINES SHOWN ON PLAN (BEAMS W/ SPECIAL END CONNECTIONS ⊕ ,⊕, ⊕ ,⊕⊕, ⊕)

DETAIL 1/S5.03
S305D003-12
METAL DECK W/O CONC TO WF BEAMS

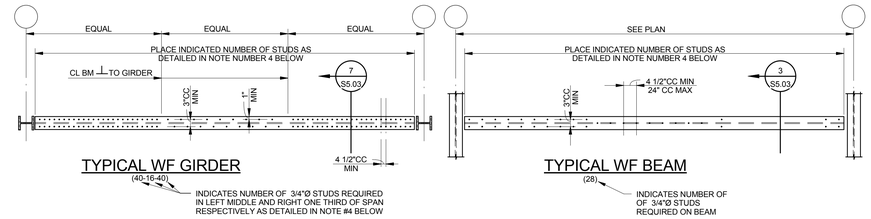

TYPICAL WF GIRDER

TYPICAL WF BEAM

NOTES:
1. SHEAR CONNECTORS FOR COMPOSITE BEAMS SHALL BE AUTOMATIC WELDED HIGH STRENGTH 3/4"Ø NELSON HEADED ANCHORS OR APPROVED EQUIVALENT.
2. ALL WELDING OF SHEAR CONNECTORS SHALL CONFORM TO THE LATEST EDITION OF "RECOMMENDED PRACTICES FOR STUD WELDING" AND "STRUCTURAL WELDING CODE" PUBLISHED BY THE AMERICAN WELDING SOCIETY.
3. SHEAR CONNECTORS SHALL PROJECT A MINIMUM OF 1 3/4" ABOVE THE TOP OF THE METAL DECK AND SHALL BE HELD A MINIMUM OF 3/4" CLEAR FROM TOP OF THE CONCRETE SLAB.
4. SHEAR CONNECTORS SHALL BE UNIFORMLY SPACED. USE NO MORE THAN ONE STUD PER RIB WHERE THE NUMBER OF SHEAR CONNECTORS REQUIRED IS LESS THAN OR EQUAL TO THE NUMBER OF RIBS AVAILABLE. WHERE THE NUMBER OF SHEAR CONNECTORS EXCEEDS THE NUMBER OF RIBS AVAILABLE, PLACE ONE SHEAR CONNECTOR PER RIB FULL LENGTH OF BEAM. PLACE BALANCE OF SHEAR CONNECTORS IN EACH RIB BEGINNING AT THE SUPPORTS AT EACH END AND MOVING TOWARD MID SPAN UNTIL THE REQUIRED NUMBER OF SHEAR CONNECTORS ARE SUPPLIED.
5. WHERE NOT INDICATED OTHERWISE, PROVIDE 3/4"Ø SHEAR CONNECTORS AT 24"CC MAXIMUM SPACING AT ALL BEAMS RECEIVING METAL DECK AND CONCRETE .
6. CONTRACTOR SHALL SUBMIT SHOP DRAWINGS FOR REVIEW PRIOR TO INSTALLATION.

DETAIL 2/S5.03
S310D006-12

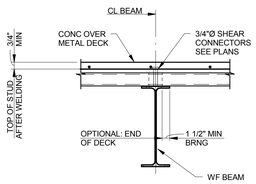

DETAIL 3/S5.03
S315D009-12
TYPICAL BEAM @ CONCRETE OVER METAL DECK

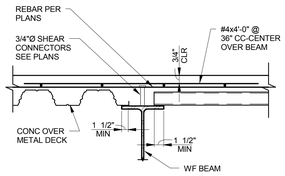

DETAIL 4/S5.03
S315D012-12
CHANGE IN DECK SPANS

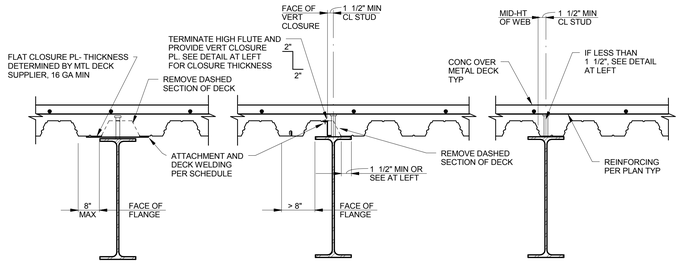

DETAIL 5/S5.03
S315D011-12
METAL DECK W/ CONCRETE PARALLEL TO BEAM

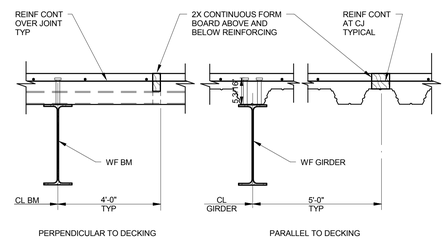

NOTES:
1. CONTRACTOR TO SUBMIT CONSTRUCTION JOINT LAYOUT FOR REVIEW BY ARCHITECT/STRUCTURAL ENGINEER PRIOR TO CONSTRUCTION.
2. RATIO OF LENGTH TO WIDTH OF POUR SHALL NOT EXCEED 1 1/2 : 1.

DETAIL 6/S5.03
S315D017-12
CONSTRUCTION JOINT IN CONCRETE OVER METAL DECK

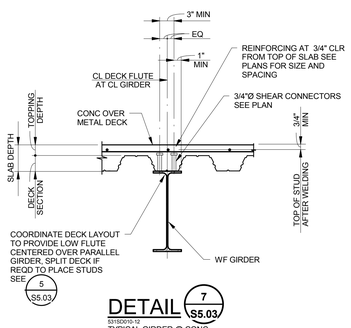

DETAIL 7/S5.03
S315D015-12
TYPICAL GIRDER @ CONC OVER METAL DECK

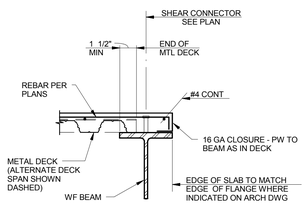

DETAIL 8/S5.03
S315D015-12
FLUSH DECK EDGE

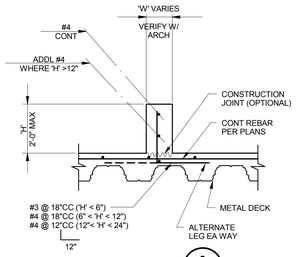

DETAIL 9/S5.03
S315D015-12
CONCRETE CURB OVER METAL DECK

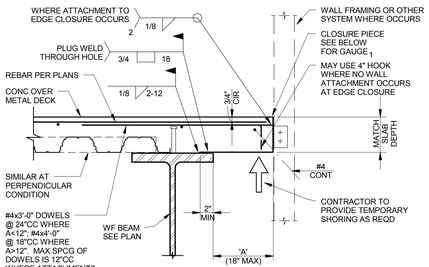

NOTES:
1. USE 10GA MIN CLOSURE WHERE METAL STUD WALL ATTACHMENT OCCURS. USE 3/16" MIN WHERE ATTACHMENT OF OTHER SYSTEMS OR COMPONENTS OCCURS.
2. DEFORMED BAR ANCHORS (DBA) OF SAME SIZE AND SPACING MAY BE PROVIDED IN LIEU OF REINFORCING DOWELS.
4. NOTCH CLOSURE AROUND SHEAR STUDS WHERE CLEARANCE IS NOT SUFFICIENT FOR STUD INSTALLATION.
3. WHERE 'A' EXCEEDS 18", SEE DETAIL 1/S5.04

'A'	GAUGE 1
TO 4"	14
TO 10"	10
TO 13"	3/16"
TO 18"	1/4"

DETAIL 10/S5.03
S315D004-12
DECK AT CANTILEVERED SLAB EDGE

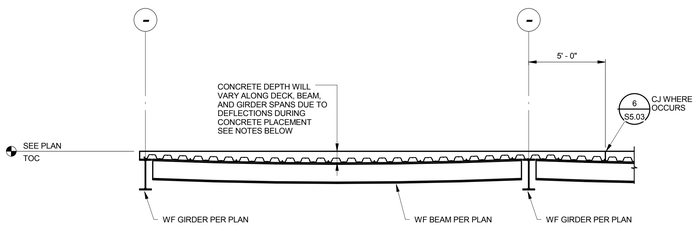

1. PROVIDE A WORK PLAN DETAILING THE MEANS AND METHODS TO BE USED FOR PLACEMENT OF CONCRETE, INCLUDING SCREEDING PROCEDURES AND LOCATIONS OF ANY CONSTRUCTION JOINTS, WHICH WILL ACHIEVE THE PERFORMANCE CRITERIA NOTED BELOW. A PRE-CONSTRUCTION MEETING SHALL BE SCHEDULED BY THE GENERAL CONTRACTOR, TO INCLUDE THE CONCRETE SUB-CONTRACTOR, ARCHITECT, STRUCTURAL ENGINEER, AND OWNER'S REPRESENTATIVE TO DISCUSS THE WORK PLAN AND PERFORMANCE OBJECTIVES.
2. THE FINAL TOP OF CONCRETE ELEVATION SHALL NOT DEVIATE BY MORE THAN 3/8" ABOVE OR BELOW THE TOP OF CONCRETE ELEVATION NOTED ON PLAN.
3. CONCRETE OVER METAL DECK SHALL BE SCREEDED FLAT BETWEEN SCREED RAILS TO OBTAIN A MAXIMUM DEVIATION OF 1/4" OVER 10'-0" MEASURED USING A STRAIGHT EDGE. MEASUREMENTS SHALL BE TAKEN UNIFORMLY ACROSS THE FLOOR AREA. AREAS OF NON-COMPLIANCE SHALL BE REVIEWED BY THE OWNER AND ARCHITECT AND MAY REQUIRE ADDITIONAL FLOOR LEVELING.
4. IN NO CASE SHALL THE DEPTH OF CONCRETE OVER METAL DECK BE LESS THAN THAT SPECIFIED ON PLAN. NOTE THAT THE CONCRETE DEPTH WILL VARY DUE TO DECK AND BEAM DEFLECTIONS DURING CONCRETE PLACEMENT, AND SHALL BE CONSIDERED IN THE ESTIMATING OF CONCRETE VOLUME, COST AND PLACEMENT STRATEGIES.

DETAIL 11/S5.03
S315D019-48
CONCRETE PLACEMENT OVER METAL DECK AT FLOORS

100% CONSTRUCTION DOCUMENTS

HILLIARD ARCHITECTS INC. COPYRIGHT

Revisions:	Date

CONSULTANTS:

Buchler & Buchler Structural Engineers, Inc.
620 Q Street, Suite 200, Sacramento, CA 95811
tel 916.443.0303 fax 916.443.0313

REGISTERED PROFESSIONAL ENGINEER WILLIAM B. RADER No. 3592 STRUCTURAL STATE OF CALIFORNIA

ARCHITECT/ENGINEERS:

ESTABLISHED 1988 HILLIARD ARCHITECTS GOING GREEN

HILLIARD ARCHITECTS, INC
251 Post Street, Suite 620
San Francisco, CA 94108-5017
Tel 415 989 6400, Fax 415 989 3056
www.HilliardArchitects.com

Drawing Title: TYPICAL METAL DECK DETAILS

Approved: Project Director

Project Title: VAMA MEDICAL SPECIALTIES BUILDING

Location: VA MATHER

Date: 05/12/2014 | Checked: WBR | Drawn: Author

Project Number: 612-122

Building Number:

Drawing Number: S5.03

Dwg. of

Office of Construction and Facilities Management

Department of Veterans Affairs

VA FORM 08-6231

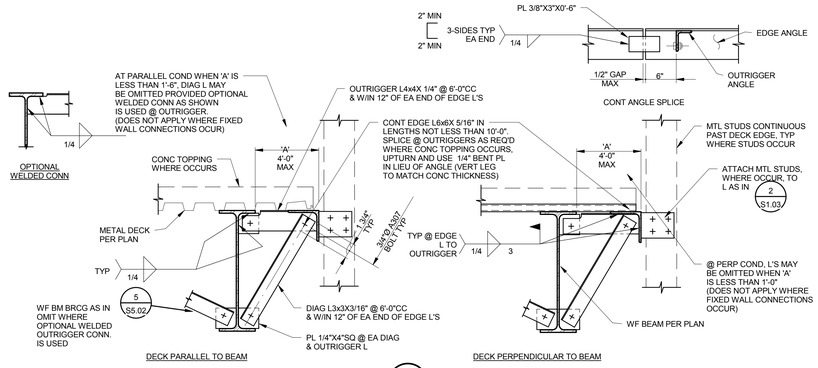

DETAIL 1/S5.04

53I5D001-12

TYPICAL DECK EDGE SUPPORT (APPLIES TO ALL BARE MTL DECK CANTILEVERS AS WELL AS CONC OVER MTL DECK CANTILEVERS > 18")

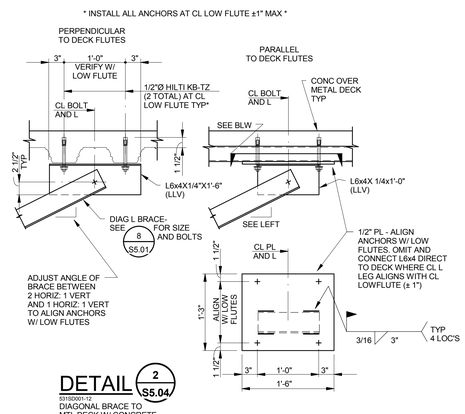

DETAIL 2/S5.04

53I5D001-12

DIAGONAL BRACE TO MTL DECK W/ CONCRETE

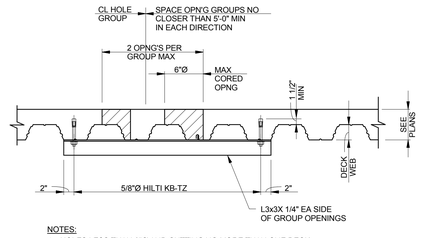

NOTES:

1. HOLES LESS THAN 6"Ø AND CUTTING NO MORE THAN ONE DECK WEB REQUIRE NO REINFORCING.
2. IF MORE THAN TWO DECK WEBS ARE CUT IN ADJACENT OPENINGS, SUPPLEMENTAL STEEL FRAMING WILL BE REQUIRED - NOTIFY STRUCTURAL ENGINEER.

COMPOSITE FLOOR DECK REINFORCING AT CORED OPENINGS 3/S5.04

53I5D002-12

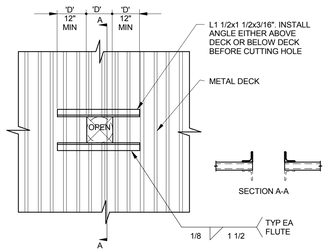

NOTE: APPLIES AT HOLES FROM 6" TO 24" WIDE IN METAL DECK WITHOUT CONCRETE

DETAIL 4/S5.04

53I5D003-12

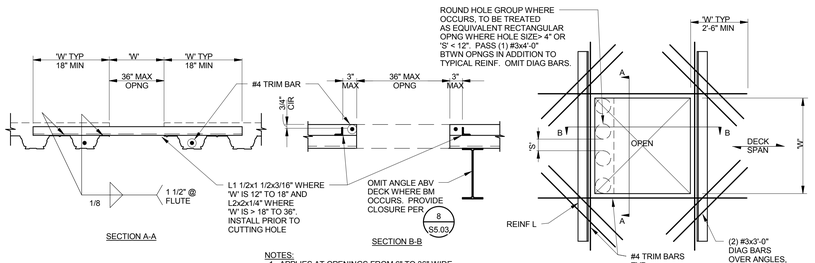

NOTES:

1. APPLIES AT OPENINGS FROM 6" TO 36" WIDE IN CONCRETE OVER METAL DECK.
2. THE MIN. SPACING BETWEEN OPENINGS SHALL BE "2W" UNLESS OPENINGS ARE GROUPED AND TREATED AS A SINGLE COMBINED OPENING OF 3'-0" MAX. WIDTH

TRIM, DIAG AND TYP SLAB BARS SHOULD BE LOCATED TO MINIMIZE LAYERING OF BARS ABV REINF L. BARS MAY BE BENT DOWN TO WITHIN 3/4" CLR OF DECK TO MAINTAIN CONC COVER ABV. BARS MAY ALSO PASS THROUGH MAX 5/8" DIA HOLES IN REINF L'S, LOCATED AT MID-HT OF ANGLE LEG.

DETAIL 5/S5.04

53I5D004-12

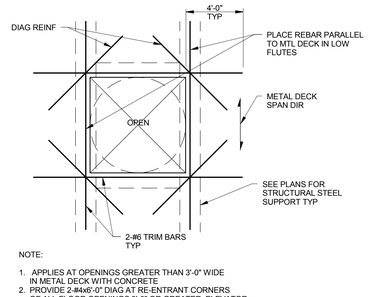

NOTE:

1. APPLIES AT OPENINGS GREATER THAN 3'-0" WIDE IN METAL DECK WITH CONCRETE
2. PROVIDE 2-#4x6'-0" DIAG AT RE-ENTRANT CORNERS OF ALL FLOOR OPENINGS 3'-0" OR GREATER, ELEVATOR SHAFTS, STAIRS, MAIN DUCT SHAFTS, ETC.
3. AT UNREINFORCED CONCRETE OVER METAL DECK, PROVIDE #3x2'-0" DIAG AT EACH CORNER OF COLUMN (4 TOTAL) TYPICAL ALL COLUMNS.

DETAIL 6/S5.04

53I5D005-12

TRIM BARS @ OPENINGS >3'-0" IN METAL DECK W/ CONCRETE

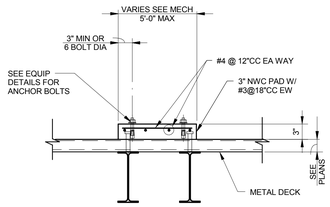

NOTE: FOR DIMENSIONS, LOCATION, AND ELEV SEE MECH'L, PLUMBING OR ELECTRICAL DWGS.

DETAIL 7/S5.04

53I5D016-REV

CONCRETE EQUIPMENT PAD OVER METAL DECK

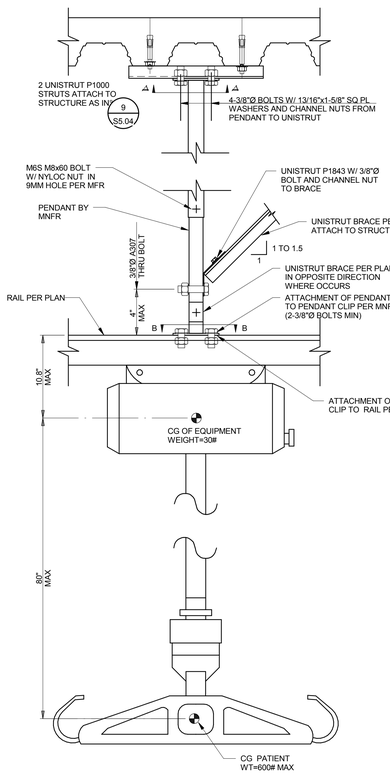

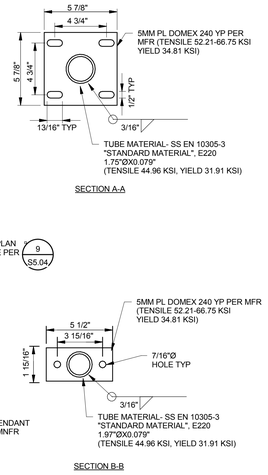

DETAIL 10/S5.04 — 1 1/2" = 1'-0"

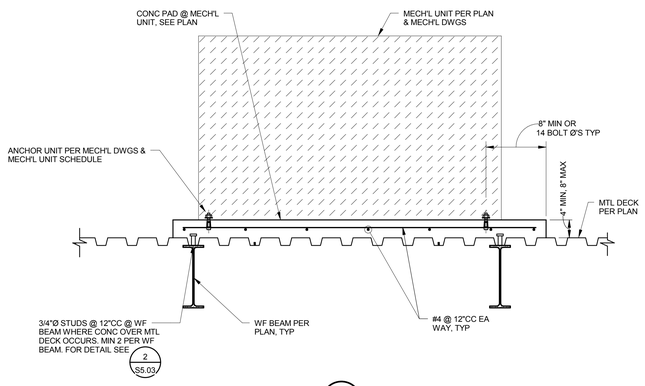

DETAIL 8/S5.04 — 1" = 1'-0"

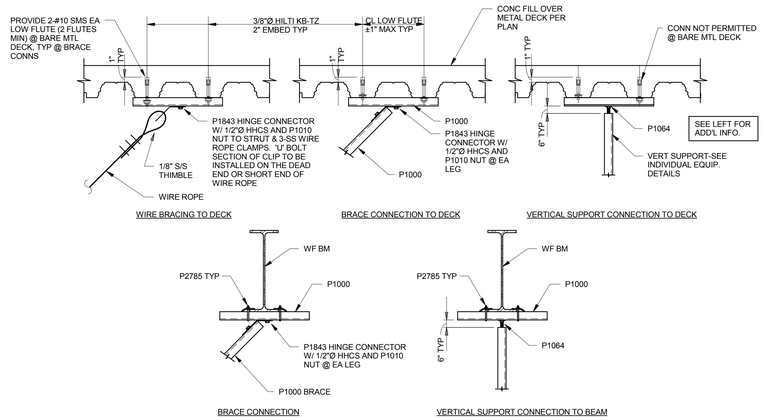

NOTE:

1. SS IS STAINLESS STEEL 316 OR 304
2. HILTI KB-TZ AB'S TO THE UNDERSIDE OF DECK SHALL BE CARBON STEEL.

DETAIL 9/S5.04 — 1" = 1'-0"

100% CONSTRUCTION DOCUMENTS

HILLIARD ARCHITECTS INC. COPYRIGHT

Revisions:	Date

CONSULTANTS:

Buehler & Buehler Structural Engineers, Inc.
620 Q Street, Suite 200, Sacramento, CA 95811
tel 916.443.0303 fax 916.443.0313

WILLIAM B. RADER No. 3592 STRUCTURAL STATE OF CALIFORNIA

ARCHITECT/ENGINEERS:

ESTABLISHED 1988 HILLIARD ARCHITECTS GOING GREEN

HILLIARD ARCHITECTS, INC
251 Post Street, Suite 620
San Francisco, CA 94108-5017
Tel 415 989 6400, Fax 415 989 3056
www.HilliardArchitects.com

Drawing Title: **TYPICAL METAL DECK DETAILS**	Project Title: **VAMA MEDICAL SPECIALTIES BUILDING**	Project Number: **612-122**	Office of Construction and Facilities Management
Approved: Project Director	Location: VA MATHER	Building Number:	Department of Veterans Affairs
	Date: **05/12/2014** / Checked: **WBR** / Drawn: **Author**	Drawing Number: **S5.04** Dwg. of	

VA FORM 08-6231

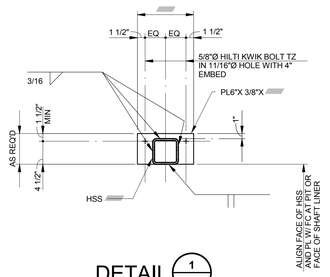

DETAIL 1/S5.05

55150005-12
ELEVATOR GUIDE RAIL SUPPORT BASE PLATE

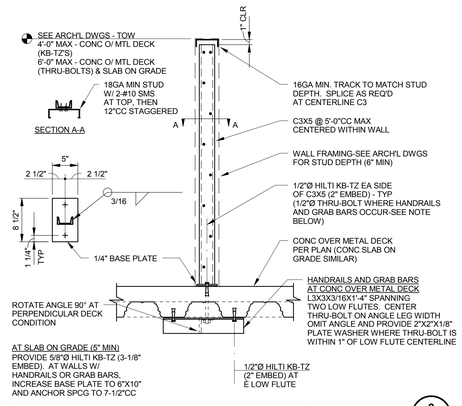

CANTILEVERED PARTIAL HEIGHT WALL 2/S5.05

54250045-12

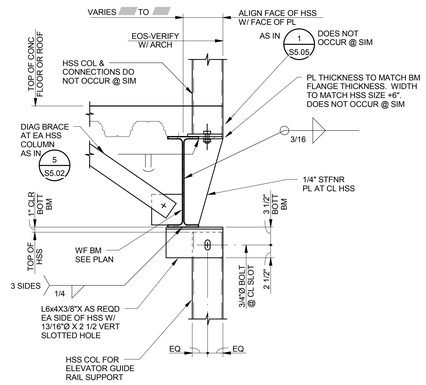

DETAIL 3/S5.05

55150005-12
GUIDE RAIL SUPPORT POST @ FLOOR

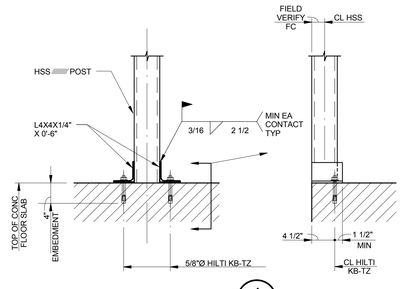

DETAIL 4/S5.05

55150001-12
ELEVATOR GUIDE RAIL SUPPORT

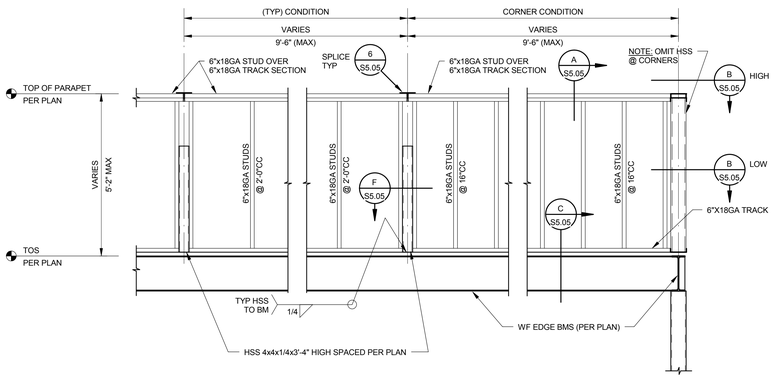

PARAPET ELEVATION 5/S5.05 — 1/2" = 1'-0"

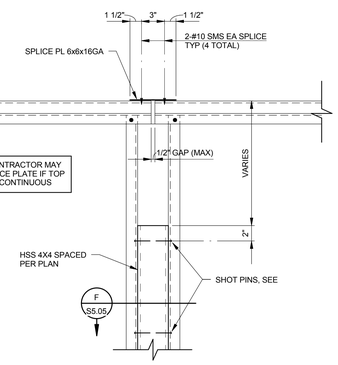

DETAIL 6/S5.05 — 1 1/2" = 1'-0"

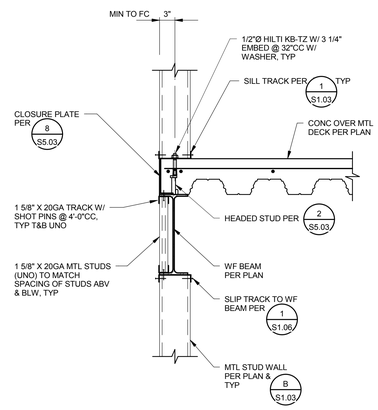

DETAIL 7/S5.05 — 1" = 1'-0"

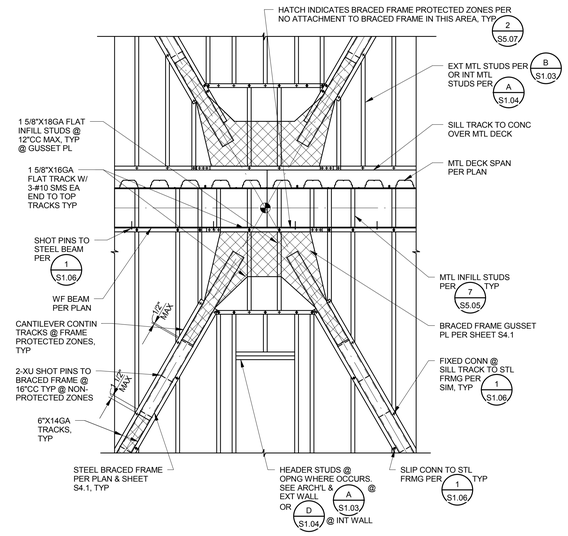

ELEVATION 8/S5.05 — 1/2" = 1'-0"

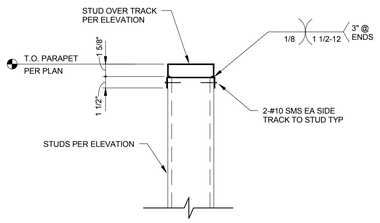

OPTION #1

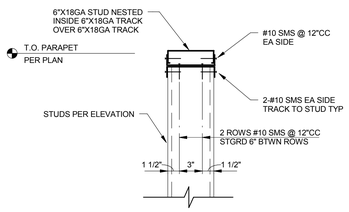

OPTION #2

SECTION A/S5.05 — 1 1/2" = 1'-0"

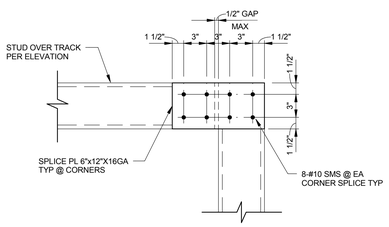

HIGH CONDITION

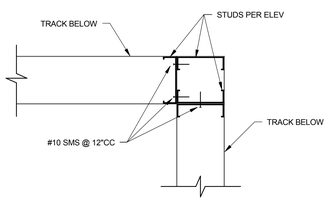

LOW CONDITION

SECTION B/S5.05 — 1 1/2" = 1'-0"

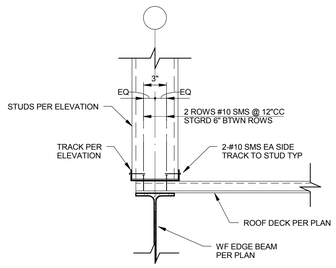

SECTION C/S5.05 — 1 1/2" = 1'-0"

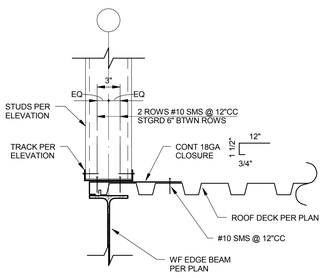

SECTION D/S5.05 — 1 1/2" = 1'-0"

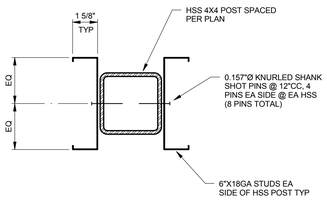

SECTION F/S5.05 — 3" = 1'-0"

100% CONSTRUCTION DOCUMENTS

HILLIARD ARCHITECTS INC. COPYRIGHT

Revisions:	Date

CONSULTANTS:

Buehler & Buehler Structural Engineers, Inc.
620 Q Street, Suite 200, Sacramento, CA 95811
tel 916.443.2303 fax 916.443.2313

WILLIAM B. RADER No. 3592 STRUCTURAL STATE OF CALIFORNIA

ARCHITECT/ENGINEERS:

ESTABLISHED 1988 HILLIARD ARCHITECTS GOING GREEN

HILLIARD ARCHITECTS, INC
251 Post Street, Suite 620
San Francisco, CA 94108-5017
Tel 415 989 6400, Fax 415 989 3056
www.HilliardArchitects.com

Drawing Title	DETAILS
Approved: Project Director	
Project Title	VAMA MEDICAL SPECIALTIES BUILDING
Project Number	612-122
Building Number	
Location	VA MATHER
Date	05/12/2014
Checked	WBR
Drawn	Author
Drawing Number	S5.05
Dwg. of	

Office of Construction and Facilities Management

Department of Veterans Affairs

VA FORM 08-6231

52300009-12

A/S5.06 BRACE CONNECTION WELDING SCHEDULE

BRACE SIZE	BRACE TO GUSSET WELDS		AT BEAM TO COLUMN AND BASE PL CONNECTIONS			AT BEAM MIDSPAN CONNECTIONS		HORIZONTAL STRUT
	S1	L1	PL 'T'	S2	S3	PL'T'	S4	S5
TYPE 1 HSS6x6x3/8	0.375	21.5	1.00	0.375	0.375	1.00	0.313	0.313
--	--	--	--	--	--	--	--	--
2-L_X_X_" HORIZ STRUT	--	--	--	--	--	--	--	--

NOTES:

1. GUSSET PL'S TO BE ASTM A572 GR 50
2. PLATE LENGTHS MAY BE ADJUSTED ± 1/2" TO FACILITATE FABRICATION. LENGTH OF WELDS L1, L2, L3 AND L4 HAVE BEEN INCREASED BY 1" TO ACCOMMODATE START-STOP TOLERANCE IN APPLICATION OF THE WELD. DETAILER NEED NOT ADD ADDITIONAL WELD LENGTH TO THE DIMENSION PROVIDED UNLESS THE GUSSET PLATE GEOMETRY DICTATES SO.
3. WHERE DIAG BRCG & HORIZ STRUT ATTACH TO A COMMON CONN PL, THE DIAG BRCG SIZE SHALL DETERMINE THE CONN PL 'T'.
4. FOR TYPICAL DIAGONAL BRACE SLOT DETAIL SEE 1/S5.07 OR 1/S5.06
5. ALL WELDS SHOWN ON THIS SHEET SHALL BE 'DEMAND CRITICAL WELDS' (DCW) AS DEFINED IN AISC 341-05 SECTION 7.3B MADE WITH FILLER MATERIAL THAT CAN PRODUCE WELDS WITH MINIMUM CHARPY V-NOTCH TOUGHNESS OF 20 FT-LBS AT MINUS 20°F AND 40 FT-LB @ 70°F AS DETERMINED BY APPENDIX X OR OTHER APPROVED METHOD.
6. CONTRACTOR SHALL CLEARLY DELINEATE, WITH DURABLE METHODS, THE YIELD LINE ON ALL BRACED FRAME GUSSET PLATES TO FACILITATE PROPER INSTALLATION AND INSPECTION. FOR ADDITIONAL INFORMATION, SEE 5/S5.06
7. DO NOT MAKE ATTACHMENTS TO DIAGONAL BRACING OR GUSSET PLATES WITHIN PROTECTED ZONES - SEE 2/S5.07
8. FABRICATOR SHALL SUBMIT SHOP DRAWINGS FOR EACH JOINT THAT IS DRAWN, TO THE SAME HORIZONTAL AND VERTICAL SCALES SO THAT PROPER JOINT DETAILING MAY BE VERIFIED.
9. THE FABRICATOR SHALL SUBMIT ONE REPRESENTATIVE SAMPLE CONNECTION DETAIL FOR EACH JOINT CONFIGURATION TYPE FOR REVIEW TO VERIFY THE PARAMETERS GIVEN HAVE BEEN PROPERLY INTERPRETED PRIOR TO DETAILING ALL OF THE BUILDING BRACED FRAME JOINTS. THE FABRICATOR IS TO DETAIL THE REMAINING JOINTS ONLY AFTER THIS SUBMITTAL HAS BEEN REVIEWED, APPROVED, AND RETURNED TO THE GENERAL CONTRACTOR.
10. L2, L3, L4& L5 (WHERE OCCURS) INDICATE WELD LENGTHS IN INCHES AS NOTED ON FRAME ELEVATIONS. LU INDICATES MAXIMUM UNBRACED LENGTH OF GUSSET PLATE. SEE 5/S5.06 AND OTHER DETAILS THIS SHEET FOR ADDITIONAL INFORMATION

L2	30
L3	33
LU	18

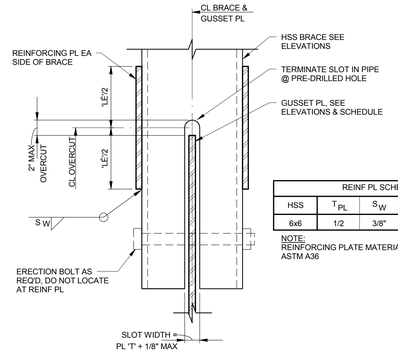

REINF PL SCHEDULE				
HSS	T_{PL}	S_W	L_{PL}	W_{PL}
6x6	1/2	3/8"	18"	4 1/4"

NOTE:
REINFORCING PLATE MATERIAL TO BE ASTM A36

DETAIL 1/S5.06 3" = 1'-0"

52300006-36
SLOT @ RECTANGULAR HSS BRACE

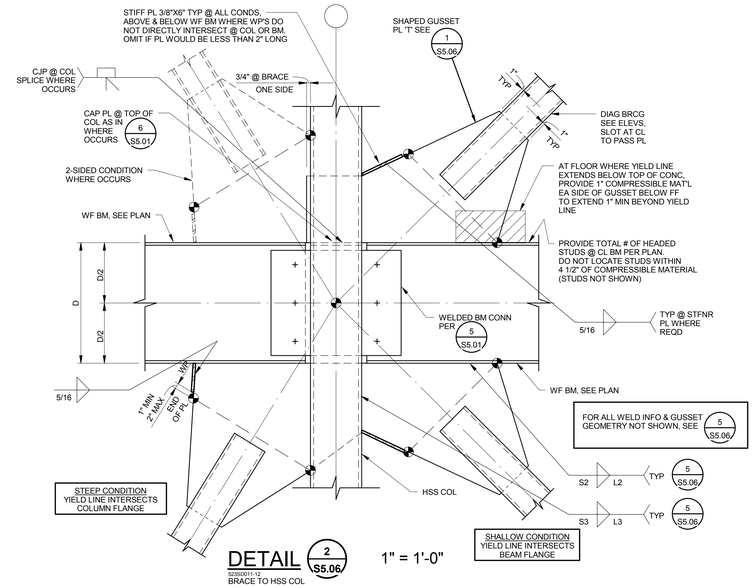

DETAIL 2/S5.06 1" = 1'-0"

52300011-12
BRACE TO HSS COL

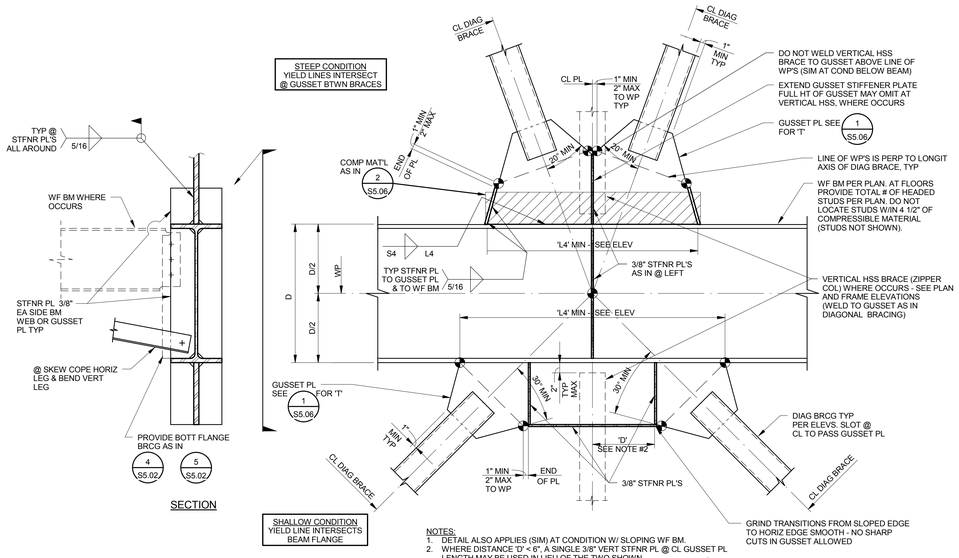

NOTES:
1. DETAIL ALSO APPLIES (SIM) AT CONDITION W/ SLOPING WF BM.
2. WHERE DISTANCE 'D' < 6", A SINGLE 3/8" VERT STFNR PL @ CL GUSSET PL LENGTH MAY BE USED IN LIEU OF THE TWO SHOWN.
3. FOR ALL WELD INFO AND GUSSET GEOMETRY NOT SHOWN, SEE 5/S5.06

DETAIL 3/S5.06 1" = 1'-0"

52300006-12
BEAM MIDSPAN

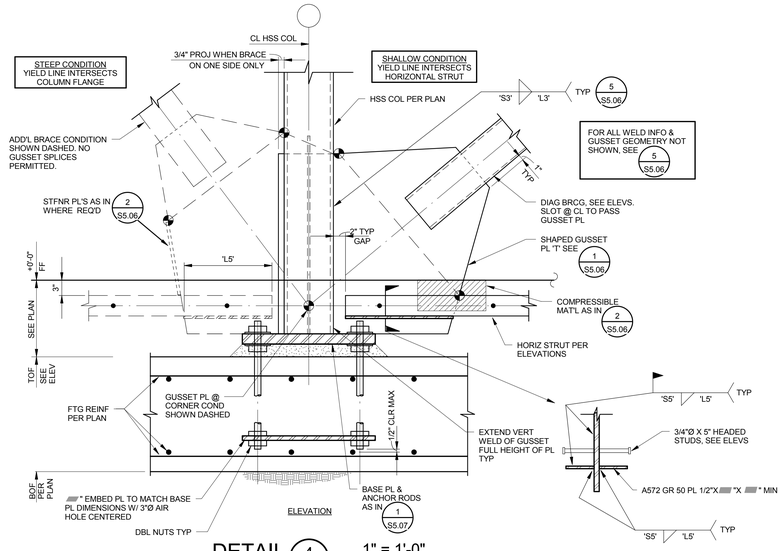

DETAIL 4/S5.06 1" = 1'-0"

52300010-12
BRACE TO HSS COL @ BASE

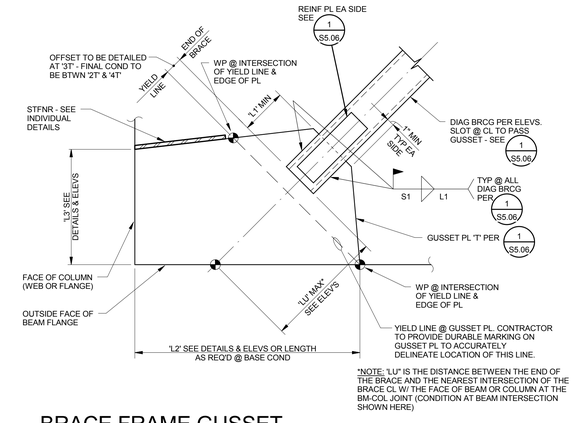

*NOTE: 'LU' IS THE DISTANCE BETWEEN THE END OF THE BRACE AND THE NEAREST INTERSECTION OF THE BRACE CL W/ THE FACE OF BEAM OR COLUMN AT THE BM-COL JOINT (CONDITION AT BEAM INTERSECTION SHOWN HERE)

BRACE FRAME GUSSET PL GEOMETRY DETAIL 5/S5.06 NO SCALE

52350007-8

HILLIARD ARCHITECTS INC. COPYRIGHT

100% CONSTRUCTION DOCUMENTS

Revisions:	Date

CONSULTANTS:

Buchler & Buchler Structural Engineers, Inc.
620 Q Street, Suite 200, Sacramento, CA 95811
tel 916-443-2303 fax 916-443-0313

REGISTERED PROFESSIONAL ENGINEER WILLIAM B. RADER No. 3992 STRUCTURAL STATE OF CALIFORNIA

ARCHITECT/ENGINEERS:

ESTABLISHED 1988 HILLIARD ARCHITECTS GOING GREEN

HILLIARD ARCHITECTS, INC
251 Post Street, Suite 620
San Francisco, CA 94108-5017
Tel 415 989 6400, Fax 415 989 3056
www.HilliardArchitects.com

Drawing Title: SPECIAL CONCENTRIC BRACED FRAME DETAILS

Approved: Project Director

Project Title: VAMA MEDICAL SPECIALTIES BUILDING

Location: VA MATHER

Date: 05/12/2014 | Checked: WBR | Drawn: Author

Project Number: 612-122

Building Number:

Drawing Number: S5.06

Dwg. of

Office of Construction and Facilities Management

Department of Veterans Affairs

VA FORM 08-6231

NOTE: HOLES @ BASE PL SHALL BE AS FOLLOWS:
1. 5/16" LARGER THAN BOLT Ø OR
2. PL HOLE Ø MAY BE 1" LARGER THAN ANCHOR ROD Ø HOWEVER PL WASHERS MUST BE USED (AS SHOWN BELOW). PL WASHERS NEED NOT BE WELDED IF HORIZ STRUT PROVIDED @ BASE.

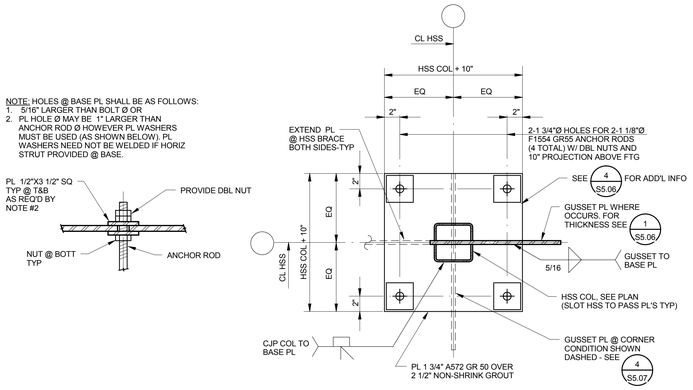

DETAIL 1 S5.07 — 1 1/2"=1'-0"
523S00013-8

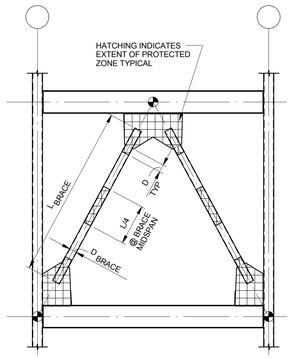

NOTES:
1. PROTECTED ZONES SHALL COMPLY WITH THE REQUIREMENTS OF AISC 341 SECTION 7.4. FABRICATOR SHALL SHOP PAINT PROTECTED ZONES IN A COLOR THAT DOES NOT MATCH ANY OTHER SHOP COATINGS AND PROTECTED ZONES SHALL BE CLEARLY LABELED IN PAINT OR OTHER DURABLE MARKING "PROTECTED ZONE NO ATTACHMENTS ALLOWED IN THIS AREA".
2. DISCONTINUITIES CREATED BY FABRICATION AND/OR ERECTION SHALL BE REPAIRED PER AISC 341 7.4. AND AWSD1.8 6.15.
3. NO WELDED, BOLTED, SCREWED OR SHOT-IN ATTACHMENTS SHALL OCCUR WITHIN PROTECTED ZONES.

PROTECTED ZONES FOR BRACED FRAMES 2 S5.07
523S00015-48

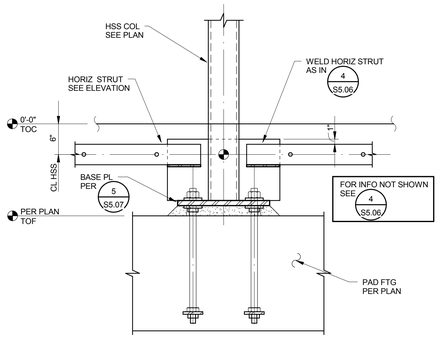

DETAIL 3 S5.07
523S00013
ZIPPER COLUMN

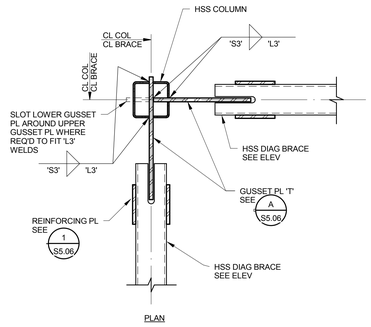

DETAIL 4 S5.07 — 1" = 1'-0"
523S00012-12

HILLIARD ARCHITECTS INC. COPYRIGHT

100% CONSTRUCTION DOCUMENTS

Revisions:	Date

CONSULTANTS:

Buchler & Buchler Structural Engineers, Inc.
620 Q Street, Suite 200, Sacramento, CA 95811
tel 916-443-2323 fax 916-443-2313

WILLIAM B. RADER No. 3592 STRUCTURAL STATE OF CALIFORNIA

ARCHITECT/ENGINEERS:

ESTABLISHED 1988 HILLIARD ARCHITECTS GOING GREEN

HILLIARD ARCHITECTS, INC
251 Post Street, Suite 620
San Francisco, CA 94108-5017
Tel 415 989 6400, Fax 415 989 3056
www.HilliardArchitects.com

Drawing Title: SPECIAL CONCENTRIC BRACED FRAME DETAILS

Approved: Project Director

Project Title: VAMA MEDICAL SPECIALTIES BUILDING

Location: VA MATHER

Date: 05/12/2014 | Checked: WBR | Drawn: Author

Project Number: 612-122

Building Number:

Drawing Number: S5.07

Dwg. of

Office of Construction and Facilities Management

Department of Veterans Affairs

VA FORM 08-6231

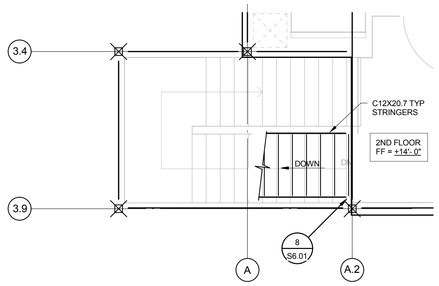

STAIR 1 SECOND FLOOR (3 / S6.01) — 1/4" = 1'-0"

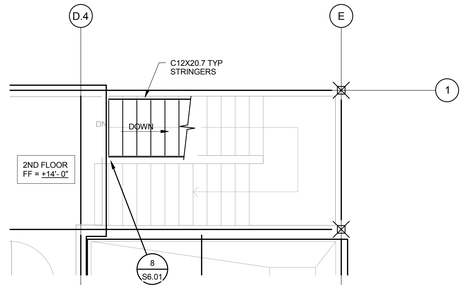

STAIR 2 SECOND FLOOR (6 / S6.01) — 1/4" = 1'-0"

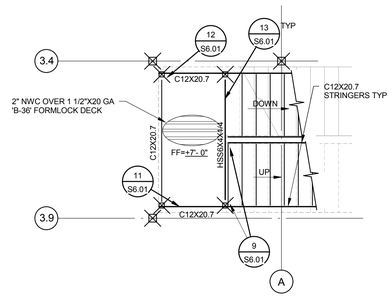

STAIR 1 INTERMEDIATE LANDING (2 / S6.01) — 1/4" = 1'-0"

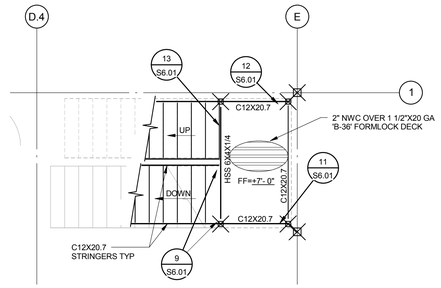

STAIR 2 INTERMEDIATE LANDING (5 / S6.01) — 1/4" = 1'-0"

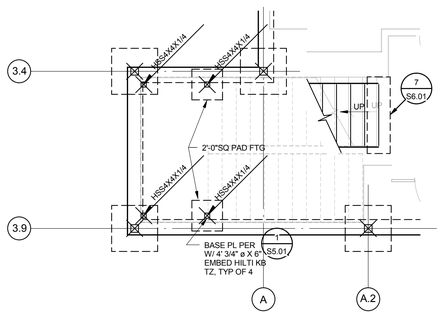

STAIR 1 FOUNDATION PLAN (1 / S6.01) — 1/4" = 1'-0"

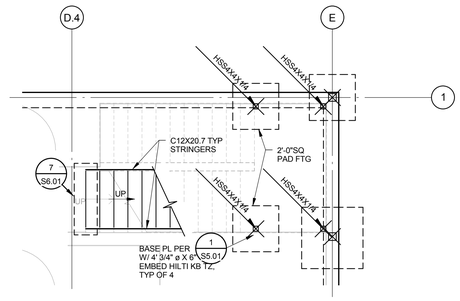

STAIR 2 FOUNDATION PLAN (4 / S6.01) — 1/4" = 1'-0"

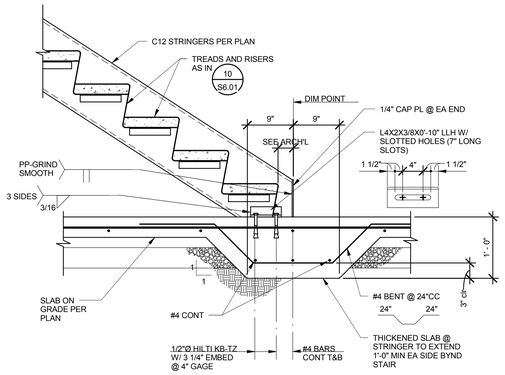

DETAIL (7 / S6.01) — 1" = 1'-0"

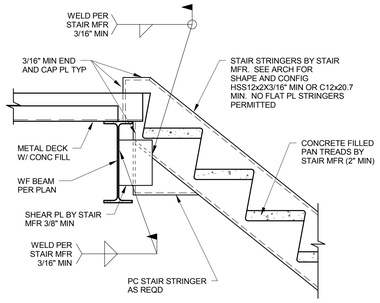

TYPICAL STAIR STRINGER TO FLOOR DETAIL (8 / S6.01)

550SD002-12

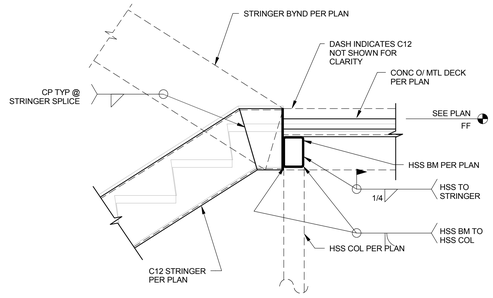

DETAIL (9 / S6.01) — 1" = 1'-0"

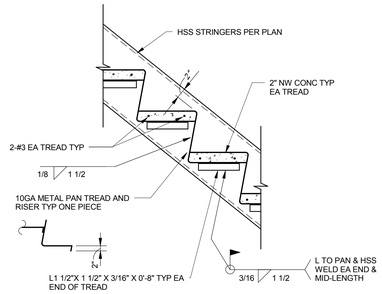

DETAIL (10 / S6.01) — 1" = 1'-0"

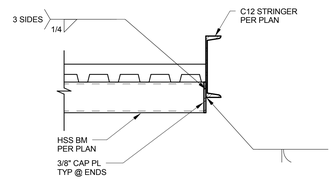

DETAIL (11 / S6.01) — 1" = 1'-0"

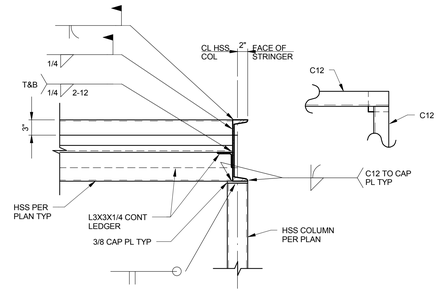

DETAIL (12 / S6.01) — 1" = 1'-0"

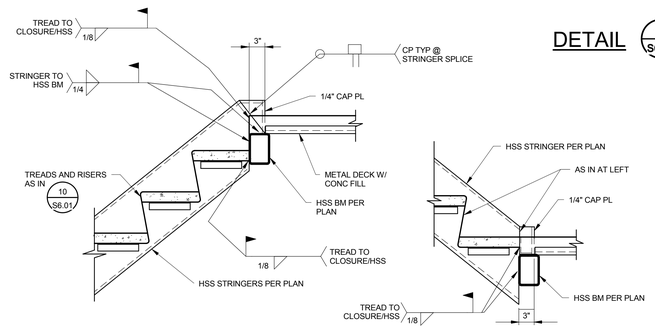

DETAIL (13 / S6.01) — 1" = 1'-0"

100% CONSTRUCTION DOCUMENTS

HILLIARD ARCHITECTS INC. COPYRIGHT

Revisions:	Date

CONSULTANTS:

Buehler & Buehler Structural Engineers, Inc.
630 Q Street, Suite 200, Sacramento, CA 95811
tel 916.443.0303 fax 916.443.0313

REGISTERED PROFESSIONAL ENGINEER — WILLIAM B. RADER No. 3592 — STRUCTURAL — STATE OF CALIFORNIA

ARCHITECT/ENGINEERS:

ESTABLISHED 1988 HILLIARD ARCHITECTS GOING GREEN

HILLIARD ARCHITECTS, INC
251 Post Street, Suite 620
San Francisco, CA 94108-5017
Tel 415 989 6400, Fax 415 989 3056
www.HilliardArchitects.com

Drawing Title: **STAIR PLANS & DETAILS**

Approved: Project Director

Project Title: **VAMA MEDICAL SPECIALTIES BUILDING**

Location: VA MATHER

Date: **05/12/2014** | Checked: **WBR** | Drawn: **Author**

Project Number: **612-122**

Building Number:

Drawing Number: **S6.01**

Dwg. of

Office of Construction and Facilities Management

Department of Veterans Affairs

VA FORM 08-6231