LEGEND, ABBREVIATION AND SYMBOLS

GRILLES, REGISTERS AND DIFFUSERS

- CFM/NECK SIZE, FACE SIZE — SUPPLY AIR REGISTER (ARROW INDICATES DIRECTION OF THROWS)
- CFM/NECK SIZE, FACE SIZE — EXHAUST AIR REGISTER
- CFM/NECK SIZE, FACE SIZE — RETURN AIR REGISTER
- CFM/HRR, NECK SIZE — RETURN OR EXHAUST REGISTER (SIDE WALL)
- CFM/HSG, NECK SIZE — SUPPLY AIR REGISTER (SIDE WALL OR SILL)
- CFM/NECK SIZE, SLOT LENGTH, NO. SLOT, SLOT WIDTH — LINEAR SUPPLY REGISTER (ARROW INDICATE DIRECTION OF THROWS)
- CFM/NECK SIZE, SLOT LENGTH, NO. SLOT, SLOT WIDTH — LINEAR EXHAUST REGISTER
- CFSD, CFSD — CEILING REGISTER/GRILLE WITH CEILING FIRE/SMOKE DAMPER
- LOW SUPPLY AIR GRILLE (DISPLACEMENT VENTILATION)

DUCTWORK

- 8ø — ROUND DUCT
- 12X8 — RECTANGULAR DUCT (FIRST FIGURE INDICATES PLAN SIZE)
- ACOUSTICALLY LINED DUCT
- R — INCLINE RISE, IN DIRECTION OF AIR FLOW
- D — INCLINE DROP, IN DIRECTION OF AIR FLOW
- FLEXIBLE DUCT
- CAP
- FLEX CONNECTOR
- SUPPLY AIR DUCT UP
- SUPPLY AIR DUCT DOWN
- EXHAUST AIR DUCT UP
- EXHAUST AIR DUCT DOWN
- ROUND AIR DUCT UP
- ROUND AIR DUCT DOWN
- RADIUSED ELBOW
- VANED ELBOW
- BRANCH TAKE-OFF (ROUND MAIN WITH 45° ROUND TAKE-OFF)
- BRANCH TAKE-OFF (ROUND MAIN WITH 90° ROUND TAKE-OFF)
- BRANCH TAKE-OFF (RECTANGULAR MAIN WITH ROUND TAKE-OFF)
- BRANCH TAKE-OFF (RECTANGULAR MAIN WITH RECTANGULAR TAKE-OFF
- DUCT SPLIT (ROUND MAIN WITH 180° ROUND BRANCHES)
- DUCT SPLIT (RECTANGULAR MAIN WITH 180° RECTANGULAR BRANCHES)
- DUCT SPLIT (RECTANGULAR MAIN WITH 90° RECTANGULAR SPLIT)
- REDUCER (RECTANGULAR TO RECTANGULAR)
- TRANSITION (RECTANGULAR TO ROUND)

DAMPERS

- MANUAL VOLUME DAMPER
- BACK DRAFT DAMPER (NORMAL FLOW DIRECTION)
- FSD — FIRE/SMOKE DAMPER
- M — MOTORIZED DAMPER
- CFSD, CFSD — CEILING FIRE/SMOKE DAMPER

TERMINAL UNITS

- HUMIDIFIER DISPERSION TUBE
- TERMINAL UNIT BASIC UNIT/SOUND ATTENUATOR WITH SINGLE OUTLET
- TERMINAL UNIT BASIC UNIT/SOUND ATTENUATOR WITH MULTIPLE OUTLETS
- TERMINAL UNIT BASIC UNIT/REHEAT COIL/SOUND ATTENUATOR WITH SINGLE OUTLET
- TERMINAL UNIT BASIC UNIT/REHEAT COIL/ SOUND ATTENUATOR WITH MULTIPLE OUTLET
- EXHAUST AIR VALVE (SINGLE)
- MULTIPLE EXHAUST AIR VALVE
- CEILING MOUNTED HUMIDIFIER UNIT
- SERVICE CLEARANCE
- HUMIDIFIER DISPERSION TUBE

PIPING

- CHS — CHILLED WATER SUPPLY
- CHR — CHILLED WATER RETURN
- CWS — CONDENSER WATER SUPPLY
- CWR — CONDENSER WATER RETURN
- HRS — HEAT RECOVERY SUPPLY
- HRR — HEAT RECOVERY RETURN
- HWS — SECONDARY HEATING HOT WATER SUPPLY
- HWR — SECONDARY HEATING HOT WATER RETURN
- HWS(P) — PRIMARY HEATING HOT WATER SUPPLY
- HWR(P) — PRIMARY HEATING HOT WATER RETURN
- CO — STEAM CONDENSATE (GRAVITY)
- LPS — LOW PRESSURE STEAM SUPPLY (5 PSIG THRU 15 PSIG)
- LPR — LOW PRESSURE CONDENSATE RETURN
- MPS — MEDIUM PRESSURE STEAM (16 PSIG THRU 59 PSIG)
- MPR — MEDIUM PRESSURE CONDENSATE RETURN
- HPS — HIGH PRESSURE STEAM SUPPLY (60 PSIG AND HIGHER)
- HPR — HIGH PRESSURE CONDENSATE RETURN
- PCO — PUMPED STEAM CONDENSATE
- PITCH DOWN – IN DIRECTION OF FLOW
- FLOW – IN DIRECTION OF ARROW

VALVES

- GATE VALVE
- BUTTERFLY VALVE
- GLOBE VALVE
- BALANCING VALVE/FLOW MEASURING DEVICE (CIRCUIT SETTER)
- CHECK VALVE
- NEEDLE VALVE
- M — CONTROL VALVE, TWO-WAY
- M — CONTROL VALVE, THREE-WAY
- PRESSURE REDUCING VALVE
- PRESSURE RELIEF VALVE
- PRESSURE REGULATING VALVE
- BALL VALVE
- RPBP — REDUCED PRESSURE TYPE BACKFLOW PREVENTOR ASSEMBLY
- HEATING/OR COOLING COIL VALVE ASSEMBLY
- M — BUTTERFLY VALVE CONTROL VALVE

PIPING SPECIALTIES

- MANUAL AIR VENT, SEE DETAIL 3/M9.1
- ALIGNMENT GUIDE
- PIPE ANCHOR
- EXPANSION JOINT
- FLEXIBLE CONNECTOR
- (R) OR (D) — PITCH OF PIPE, RISE (R) DROP (D)
- TR — STEAM TRAP ASSEMBLY,
- STRAINER
- STRAINER WITH HOSE END BLOW OFF VALVE
- THERMOMETER
- TEST PLUG (PRESSURE/TEMPERATURE)
- REDUCER
- PRESSURE GAUGE AND NEDDLE VALVE
- PRV — PRESSURE REDUCING STATION

PIPE FITTINGS

- PIPE UP OR RISE ELBOW TURNED UP
- PIPE DOWN OR DROP ELBOW, TURNED DOWN
- RISER OR DROP CONNECTION
- TOP CONNECTION
- BOTTOM CONNECTION
- SIDE CONNECTION
- BRANCH CONNECTION (TOP, BOTTOM OR SIDE AS REQUIRED BY CODE)
- CAP
- UNION
- FLANGE

CONTROLS

- M — CONTROL MAIN AIR
- T — THERMOSTAT
- H — HUMIDISTAT
- FS — FLOW SWITCH
- PRESSURE GAUGE
- TEMPERATURE INDICATOR
- DPS — DIFFERENTIAL PRESSURE SWITCH
- AI — ANALOG INPUT
- AO — ANALOG OUTPUT
- DI — DIGITAL INPUT
- DO — DIGITAL OUTPUT
- VFD — VARIABLE FREQUENCY DRIVE CONTROLLER
- CFM — AIR FLOW MEASURING DEVICE
- DSD — DUCT SMOKE DETECTOR
- T1 — TEMPERATURE SENSOR
- M — DAMPER MOTOR
- AI — WATER FLOW METER DEVICE
- AI — DUCT STATIC PRESSURE SENSOR
- AI — DUCT STATIC PRESSURE
- FILTER PRESSURE SENSOR WITH DWYER
- CURRENT SENSOR
- MS — MOTOR SENSOR
- MOTORIZED DAMPER
- DUCT TEMPERATURE SENSOR
- BACKDRAFT DAMPER
- TCP — TEMPERATURE CONTROL PANEL

MISCELLANEOUS

- ITEM / 1 — EQUIPMENT TYPE / EQUIPMENT NUMBER
- 1 / M9.1 — DETAIL NUMBER / SHEET NUMBER
- A / M3.1 — SECTION NUMBER / SHEET NUMBER
- N Project / N True — NORTH ARROW (REFERENCE)
- TU / 01.02.03 — TU = TERMINAL UNIT; AV = AIR VALVE; EQUIPMENT NUMBER; FLOOR LOCATION; AHU NUMBER

ABBREVIATIONS

AF	AIR FOIL
AFF	ABOVE FINISH FLOOR
AFM	AIR FLOW MEASURING DEVICE
AHU	AIR HANDLING UNIT
AP	ACCESS PANEL
ARCH	ARCHITECT
AV	AIR VALVE
ACFM	ACTUAL CUBIC FEET PER MINUTE
BFPA	BACKFLOW PREVENTER ASSEMBLY
BV	BUTTERFLY VALVE
BHP	BRAKE HORSEPOWER/BOILER HORSEPOWER
BOD	BOTTOM OF DUCT
CAP	CAPACITY
CAV	CONSTANT AIR VOLUME
CC	COOLING COIL
CD	CONDENSATE DRAIN
CFF	CAP FOR FUTURE
CFH	CUBIC FEET PER HOUR
CFM	CUBIC FEET PER MINUTE
CFSD	CEILING FIRE/SMOKE DAMPER
CH	CHILLER
CHP	CHILLED WATER PUMP
CHR	CHILLED WATER RETURN
CHS	CHILLED WATER SUPPLY
CLG	CEILING
CO	STEAM CONDENSATE (GRAVITY)
COL	COLUMN
COND	CONDENSER/CONDENSING/CONDENSATE
CONT	CONTINUATION
CRP	CONDENSATE RETURN PUMP
CV	CONTROL VALVE
D	INDIRECT DRAIN
DB	DRY BULB TEMPERATURE
DEFL	DEFLECTION
DET	DETAIL
DIA	DIAMETER
DL	DOOR LOUVER
DN	DOWN
DSD	DUCT SMOKE DETECTOR
DWG	DRAWING
DPS	DIFFERENTIAL PRESSURE SWITCH
EA	EXHAUST AIR
EAT	ENTERING AIR TEMPERATURE
EF	EXHAUST FAN
EFF	EFFICIENCY
ELECT	ELECTRICAL
ELEV	ELEVATION
ENT	ENTERING
ESP	EXTERNAL STATIC PRESSURE
ET	EXPANSION TANK
EWT	ENTERING WATER TEMPERATURE
EXH	EXHAUST
FA	FACE AREA/FREE AREA
FC	FLEXIBLE CONNECTION
FCU	FAN COIL UNIT
FD	FIRE DAMPER
FF	FINAL FILTER
FIN	FINISHED
FLR	FLOOR
FM	FLOW METER
FPM	FEET PER MINUTE
FS	FLOW SWITCH
FSD	FIRE SMOKE DAMPER
FT	FEET
GAL	GALLON
GEN	GENERATOR
GPH	GALLONS PER HOUR
GPM	GALLONS PER MINUTE
GR	GRADE
GV	GATE VALVE
HEG	HIGH EXHAUST GRILLE (WALL TYPE)
HC	HEATING COIL
HD	HEAD
HP	HORSE POWER
HPR	HIGH PRESSURE CONDENSATE RETURN
HPS	HIGH PRESSURE STEAM (60 PSIG AND ABOVE)
HTG	HEATING
HV	HEATING AND VENTILATING
HVAC	HEATING, VENTILATING AND AIR CONDITIONING
HR	HOUR
HRG	HIGH RETURN GRILLE (WALL TYPE)
HRS	HEAT RECOVERY SUPPLY
HRR	HEAT RECOVERY RETURN/HIGH RETURN REGISTER
HRP	HEAT RECOVERY PUMP
HSG	HIGH SUPPLY GRILLE (WALL TYPE)
HWP	HOT WATER PUMP
HWR	HEATING HOT WATER RETURN
HWS	HEATING HOT WATER SUPPLY
HWR(P)	PRIMARY HEATING HOT WATER RETURN
HWS(P)	PRIMARY HEATING HOT WATER SUPPLY
HX	HEAT EXCHANGER
HZ	HERTZ
ID	INSIDE DIAMETER
IPDT	INTEGRATED PROJECT DELIVERY TEAM
KW	KILOWATTS
LAT	LEAVING AIR TEMPERATURE
LBS	POUNDS
LEG	LOW EXHAUST GRILLE
LP	LOW PRESSURE
LPR	LOW PRESSURE CONDENSATE RETURN
LPS	LOW PRESSURE STEAM (15 PSIG AND BELOW)
LVG	LEAVING
LWT	LEAVING WATER TEMPERATURE
LRR	LOW RETURN REGISTER
LSG	LOW SUPPLY GRILLE
MAX	MAXIMUM
MBH	THOUSAND BRITISH THERMAL UNITS PER HOUR
MCC	MOTOR CONTROL CENTER
MD	MOTORIZED DAMPER
MEZZ	MEZZANINE
MFR	MANUFACTURER
MISC	MISCELLANEOUS
MIN	MINIMUM
MPR	MEDIUM PRESSURE CONDENSATE RETURN
MPS	MEDIUM PRESSURE STEAM (16 PSIG THRU 59 PSIG)
MS	MOTOR STARTER
MUW	MAKE UP WATER
NC	NORMALLY CLOSED
NFPA	NATIONAL FIRE PROTECTION ASSOCIATION
NO	NORMALLY OPEN/NUMBER
NTS	NOT TO SCALE
OA	OUTSIDE AIR
OD	OUTSIDE DIMENSION
OV	OUTLET VELOCITY
PCO	PUMPED CONDENSATE
PD	PUMP DISCHARGE/PRESSURE DROP
PF	PRE FILTER
PH	PHASE
PLBG	PLUMBING
POC	POINT OF CONNECTION
PRV	PRESSURE REDUCING VALVE
PS	PRESSURE SWITCH
PSI	POUNDS PER SQUARE INCH
PSIG	POUNDS PER SQUARE INCH GAUGE
PTS	PNEUMATIC TUBE SYSTEM
RA	RETURN AIR
RF	RETURN AIR FAN
RFV	RELIEF VENT
RH	RELATIVE HUMIDITY
RHC	REHEAT COIL
RM	ROOM
RPBP	REDUCED PRESSURE TYPE BACKFLOW PREVENTOR
RPM	REVOLUTIONS PER MINUTE
RV	RELIEF VALVE/ROOF VENTILATOR/RELIEF VENT

ABBREVIATIONS

SA	SUPPLY AIR
SCH	SCHEDULE
SCFM	STANDARD CUBIC FEET PER MINUTE
SF	SUPPLY FAN
SHWP	SECONDARY HOT WATER PUMP
SM	SHEET METAL
SS	STAINLESS STEEL
ST	SOUND TRAP
STD	STANDARD
STRUCT	STRUCTURAL
T'STAT	THERMOSTAT
TEMP	TEMPORARY
TH	THERMOMETER
TR	TONS OF REFRIGERATION
TSP	TOTAL STATIC PRESSURE
TU	TERMINAL UNIT
TYP	TYPICAL
VD	VOLUME DAMPER
VEL	VELOCITY
VFC	VARIABLE FREQUENCY DRIVE CONTROLLER
VTR	VENT THRU ROOF
V	VOLT
WB	WET BULB TEMPERATURE
W/	WITH
W/O	WITHOUT
WT	WEIGHT

Issues & Revisions:	Date

CONSULTANTS:

TED JACOB ENGINEERING GROUP
LEADING BY INNOVATION
JOB NO. MEI-001
1763 BROADWAY, OAKLAND, CA 94612-2105
(510) 763-4880 FAX (510) 763-5099

Copyright © 2013 Ted Jacob Engineering Group. All rights reserved. No part of this work may be reproduced, changed, copied or transmitted in any form or by any means, electronic or mechanical, including, but not retrieval system, except as may be expressly permitted in writing from TJEG.

REGISTERED PROFESSIONAL ENGINEER — TED JACOB — No. M18692 — MECHANICAL — STATE OF CALIFORNIA

KEY PLAN

ARCHITECT/ENGINEERS:

MEI architecture + interiors
239 9TH STREET, SUITE 201
SAN FRANCISCO, CA 94103
T (415) 682-7376 F (415) 682-7339
www.meiarchitects.com

Drawing Title: **MECHANICAL LEGEND, ABBREVIATION, AND NOTES**

Approved: Project Director

Project Title: **CONSOLIDATE / EXPAND MEDICAL PROCEDURES MINOR (CEMP)**

Location: **VANCHCS - MATHER, CA**

Date: **APRIL 22, 2014** | Checked: **PM** | Drawn: **TH**

Project Number: **612-111**

Building Number:

Drawing Number: **M0.01** Dwg. -- of --

Office of Facilities Management

Department of Veterans Affairs

VA FORM 08-6231, OCT 1978 04/28/2014 1:57:20 PM

FULLY SPRINKLERED **100% CONSTRUCTION DOCUMENTS**

TERMINAL UNIT SCHEDULE

TERMINAL UNIT								RE-HEAT COIL (MINIMUM CAPACITY AT MINIMUM CFM)											
UNIT	SYSTEM	LOCATION	CFM MIN	CFM MAX	ROUND INLET SIZE IN	BOX SIZE IN	MAX PD IN WG	EAT °F	LAT °F	MIN CAP MBH	MAX GPM	EWT °F	LWT °F	MIN NO ROWS	MAX WATER PD FT	CONTROL VALVE TYPE 2 OR 3 WAY	CONTROL VALVE SIZE IN	CONTROL VALVE CV	MIN BRANCH PIPE SIZE IN
TU-1-01	AHU-1	1ST FLR	175	865	12	16X15X15.5	0.3	55	90	6.6	0.7	180	160	2	0.84	2	–	–	3/4
TU-1-02	AHU-1	1ST FLR	285	285	8	12X10X15.5	0.3	55	90	10.8	1.1	180	160	2	2.32	2	–	–	3/4
TU-1-03	AHU-1	1ST FLR	525	525	10	14X12.5X15.5	0.3	55	80	14.2	1.4	180	160	1	0.68	2	–	–	3/4
TU-1-04	AHU-1	1ST FLR	110	545	10	14X12.5X15.5	0.3	55	90	4.2	0.5	180	160	2	0.65	2	–	–	3/4
TU-1-05	AHU-1	1ST FLR	250	250	6	12X8X15.5	0.3	55	80	6.8	0.7	180	160	1	0.5	2	–	–	3/4
TU-1-06	AHU-1	1ST FLR	55	265	8	12X10X15.5	0.3	55	90	2.1	0.5	180	160	2	0.33	2	–	–	3/4
TU-1-07	AHU-1	1ST FLR	200	200	6	12X8X15.5	0.3	–	–	–	–	–	–	–	–	–	–	–	–
TU-1-08	AHU-1	1ST FLR	95	475	10	14X12.5X15.5	0.3	55	90	3.6	0.5	180	160	2	0.65	2	–	–	3/4
TU-1-09	AHU-1	1ST FLR	170	835	12	16X15X15.5	0.3	55	80	4.6	0.5	180	160	1	0.45	2	–	–	3/4
TU-1-10	AHU-1	1ST FLR	665	665	10	14X12.5X15.5	0.3	55	80	18.0	1.8	180	160	1	0.68	2	–	–	3/4
TU-1-11	AHU-1	1ST FLR	270	535	10	14X12.5X15.5	0.3	55	80	7.3	0.7	180	160	1	0.68	2	–	–	3/4
TU-1-12	AHU-1	1ST FLR	270	535	10	14X12.5X15.5	0.3	55	80	7.3	0.7	180	160	1	0.68	2	–	–	3/4
TU-1-13	AHU-1	1ST FLR	270	535	10	14X12.5X15.5	0.3	55	80	7.3	0.7	180	160	1	0.68	2	–	–	3/4
TU-1-14	AHU-1	1ST FLR	930	930	12	16X15X15.5	0.3	55	80	25.1	2.5	180	160	1	0.95	2	–	–	3/4
TU-1-15	AHU-1	1ST FLR	145	705	10	14X12.5X15.5	0.3	55	90	5.5	0.5	180	160	2	0.65	2	–	–	3/4
TU-1-16	AHU-1	1ST FLR	425	425	10	14X12.5X15.5	0.3	55	80	11.5	1.1	180	160	1	0.68	2	–	–	3/4
TU-1-17	AHU-1	1ST FLR	690	690	10	14X12.5X15.5	0.3	55	80	18.6	1.9	180	160	1	0.68	2	–	–	3/4
TU-1-18	AHU-1	1ST FLR	315	630	10	14X12.5X15.5	0.3	55	80	8.5	0.9	180	160	1	0.68	2	–	–	3/4
TU-1-19	AHU-1	1ST FLR	265	530	10	14X12.5X15.5	0.3	55	80	7.2	0.7	180	160	1	0.68	2	–	–	3/4
TU-1-20	AHU-1	1ST FLR	310	615	10	14X12.5X15.5	0.3	55	80	8.4	0.8	180	160	1	0.68	2	–	–	3/4
TU-1-21	AHU-1	1ST FLR	360	720	10	14X12.5X15.5	0.3	55	80	9.7	1.0	180	160	1	0.68	2	–	–	3/4
TU-1-22	AHU-1	1ST FLR	1200	2005	16	24X18X15.5	0.3	55	90	45.4	4.5	180	160	2	1.26	2	–	–	1
TU-1-23	AHU-1	1ST FLR	200	200	6	12X8X15.5	0.3	–	–	–	–	–	–	–	–	–	–	–	–
TU-1-24	AHU-1	1ST FLR	145	145	6	12X8X15.5	0.3	–	–	–	–	–	–	–	–	–	–	–	–
TU-1-25	AHU-1	1ST FLR	360	360	8	12X10X15.5	0.3	55	80	9.7	1.0	180	160	1	0.69	2	–	–	3/4
TU-2-01	AHU-1	2ND FLR	125	620	10	14X12.5X15.5	0.3	55	90	4.7	0.5	180	160	2	0.65	2	–	–	3/4
TU-2-02	AHU-1	2ND FLR	205	1025	12	16X15X15.5	0.3	55	90	7.7	0.8	180	160	2	0.84	2	–	–	3/4
TU-2-03	AHU-1	2ND FLR	40	200	6	12X8X15.5	0.3	55	90	1.5	0.5	180	160	2	0.24	2	–	–	3/4
TU-2-04	AHU-1	2ND FLR	145	720	10	14X12.5X15.5	0.3	55	90	5.5	0.5	180	160	2	0.65	2	–	–	3/4
TU-2-05	AHU-1	2ND FLR	200	200	6	12X8X15.5	0.3	–	–	–	–	–	–	–	–	–	–	–	–
TU-2-06	AHU-1	2ND FLR	55	270	8	12X10X15.5	0.3	55	90	2.1	0.5	180	160	2	0.33	2	–	–	3/4
TU-2-07	AHU-1	2ND FLR	80	390	8	12X10X15.5	0.3	55	90	3.0	0.5	180	160	2	0.33	2	–	–	3/4
TU-2-08	AHU-1	2ND FLR	70	330	8	12X10X15.5	0.3	55	90	2.6	0.5	180	160	2	0.33	2	–	–	3/4
TU-2-09	AHU-1	2ND FLR	100	480	10	14X12.5X15.5	0.3	55	90	3.8	0.5	180	160	2	0.65	2	–	–	3/4
TU-2-10	AHU-1	2ND FLR	55	270	8	12X10X15.5	0.3	55	90	2.1	0.5	180	160	2	0.33	2	–	–	3/4
TU-2-11	AHU-1	2ND FLR	70	350	8	12X10X15.5	0.3	55	90	2.6	0.5	180	160	2	0.33	2	–	–	3/4
TU-2-12	AHU-1	2ND FLR	35	170	6	12X8X15.5	0.3	55	80	0.9	0.5	180	160	1	0.5	2	–	–	3/4
TU-2-13	AHU-1	2ND FLR	270	540	10	14X12.5X15.5	0.3	55	80	7.3	0.7	180	160	1	0.68	2	–	–	3/4
TU-2-14	AHU-1	2ND FLR	1235	1235	14	20X18X15.5	0.3	55	80	33.3	3.3	180	160	1	2.31	2	–	–	1
TU-2-15	AHU-1	2ND FLR	725	725	10	14X12.5X15.5	0.3	55	80	19.6	2.0	180	160	1	0.68	2	–	–	3/4
TU-2-16	AHU-1	2ND FLR	125	125	6	12X8X15.5	0.3	–	–	–	–	–	–	–	–	–	–	–	–
TU-2-17	AHU-1	1ST FLR	200	200	6	12X8X15.5	0.3	55	80	5.4	0.5	180	160	1	0.5	2	–	–	3/4

EXHAUST AIR CONTROL VALVE SCHEDULE

UNIT	SYSTEM	LOCATION	CFM MIN	CFM MAX	ROUND INLET SIZE IN	BOX SIZE IN	MAX PD IN WG	REMARK
AV-1-01	AHU-1	1ST FLR	285	1410	16	14X12.5X15.5	0.4	ASSOICATED WITH TU-1-01, & TU-1-04
AV-1-02	AHU-1	1ST FLR	385	385	10	12X10X15.5	0.4	--
AV-1-03	AHU-1	1ST FLR	320	1480	16	14X12.5X15.5	0.4	ASSOICATED WITH TU-1-06, TU-1-08, & TU-1-09
AV-1-04	AHU-1	1ST FLR	505	505	10	12X10X15.5	0.4	--
AV-1-05	AHU-1	1ST FLR	435	700	12	12X10X15.5	0.4	ASSOICATED WITH TU-1-11
AV-1-06	AHU-1	1ST FLR	435	700	12	12X10X15.5	0.4	ASSOICATED WITH TU-1-12
AV-1-07	AHU-1	1ST FLR	435	700	12	12X10X15.5	0.4	ASSOICATED WITH TU-1-13
AV-1-08	AHU-1	1ST FLR	145	705	12	12X10X15.5	0.4	ASSOICATED WITH TU-1-15
AV-1-09	AHU-1	1ST FLR	1305	1305	16	14X12.5X15.5	0.4	--
AV-1-10	AHU-1	1ST FLR	345	1155	16	14X12.5X15.5	0.4	ASSOICATED WITH TU-1-22
AV-1-11	AHU-1	1ST FLR	505	820	12	12X10X15.5	0.4	ASSOICATED WITH TU-1-18
AV-1-12	AHU-1	1ST FLR	425	690	12	12X10X15.5	0.4	ASSOICATED WITH TU-1-19
AV-1-13	AHU-1	1ST FLR	495	800	12	12X10X15.5	0.4	ASSOICATED WITH TU-1-20
AV-1-14	AHU-1	1ST FLR	580	940	12	12X10X15.5	0.4	ASSOICATED WITH TU-1-21
AV-1-15	AHU-1	1ST FLR	1025	1025	16	14X12.5X15.5	0.4	--
AV-2-01	AHU-1	2ND FLR	425	425	10	12X10X15.5	0.4	--
AV-2-02	AHU-1	2ND FLR	375	1820	16	14X12.5X15.5	0.4	ASSOICATED WITH TU-2-07, TU-2-08, TU-2-09, TU-2-10, & TU-2-11
AV-2-03	AHU-1	2ND FLR	435	705	12	12X10X15.5	0.4	ASSOICATED WITH TU-2-13
AV-2-04	AHU-1	2ND FLR	1670	1670	16	14X12.5X15.5	0.4	--
AV-2-05	AHU-1	2ND FLR	200	990	12	12X10X15.5	0.4	ASSOICATED WITH TU-2-04 & TU-2-06
AV-2-06	AHU-1	2ND FLR	205	1025	16	12X10X15.5	0.4	ASSOICATED WITH TU-2-02
AV-2-07	AHU-1	2ND FLR	390	990	12	12X10X15.5	0.4	ASSOICATED WITH TU-2-01, TU-2-03, & TU-2-12

COOLING COIL SCHEDULE (CHILLED WATER)

UNIT	SYSTEM	AIR DATA: CAPACITY MBH SCFM	ACFM	TOTAL	SENSIBLE	EAT °F DB	EAT °F WB	LAT °F DB	LAT °F WB	MAX VEL. FPM	APD IN WG	WATER DATA: MAX GPM	EWT °F	LWT °F	PD FT HD	No. ROWS	No. FINS	CONTROL VALVE TYPE	BRANCH PIPE SIZE INCHES	REMARK
CC-1	AHU-1	–	24,000	1,312.8	1,134.4	101.0	70.0	50.5	50.1	500	0.52	261.1	45.0	55.0	13.3	6	10	–	–	
EAC-CC-1	EAC-1	1,600	–	48.2	39.6	72	58.6	49.1	47.1	320	–	12	85	–	8.1	4	12	–	–	
EAC-CC-AUX-1	EAC-1	1,600	–	34.5	31.0	72	58.6	49.1	47.1	320	–	9.6	45	–	8.5	4	12	–	–	
EAC-CC-2	EAC-2	1,000	–	29.8	24.8	72	58.6	49.0	47.0	323	–	6.0	85	–	7.4	4	12	–	–	
EAC-CC-AUX-2	EAC-2	1,000	–	21.8	19.7	72	58.6	49.1	47.1	320	–	7.0	45	–	5.3	4	12	–	–	

AIR FILTER SCHEDULE

UNIT	SYSTEM	FILTER BANK CFM	HOUSING TYPE	RATED EFF %	MERV RATING	MAX PD IN W.G. INITIAL	MAX PD IN W.G. FINAL	FILTER RATED CFM	CARTRIDGES QUANTITY	CARTRIDGES SIZE IN	MANUFACTURER & MODEL NO.	REMARKS
PF-1	AHU-1	25,000	INTEGRAL W/ AHU	35	7	0.15	0.5	–	–	24x24x15/24x12x4	–	
PF-2	AHU-1	25,000	INTEGRAL W/ AHU	65	11	0.25	0.65	–	–	24x24x15/24x12x12	–	
FF-1	AHU-1	25,000	INTEGRAL W/ AHU	90	14	0.50	1.0	–	–	24x24x12/24x12x12	–	
PF-E-1	AHU-1	25,000	INTEGRAL W/ AHU	65	–	0.25	0.65	–	–	24x24x15/24x12x12	–	

PUMP SCHEDULE

UNIT	LOCATION	SYSTEM	CIRCULATING FLUID: FLUID	GPM	PUMP HEAD FT WC	TEMP. °F	% EFF.	TYPE	MOTOR HP	V/Ø/HZ	RPM	OPER. WT. LBS	MANUFACTURER & MODEL NO.	REMARK
HWP-1	MECH. RM	HEATING WATER	WATER	50	40	180	56.46	BASE MTD	1.5	460/3/60	1750	160	B&G 1531- 1-1/4AC	1, 4
HWP-2	MECH. RM	HEATING WATER	WATER	50	40	180	56.46	BASE MTD	1.5	460/3/60	1750	160	B&G 1531- 1-1/4AC	1, 3, 4
CHP-1	AHU-1	CHILLED WATER	WATER	250	45	60	70	BASE MTD.	5	460/3/60	1750	175	B&G 1531-2.5BB	1, 2, 4
CHP-2	AHU-1	CHILLED WATER	WATER	250	45	60	70	BASE MTD.	5	460/3/60	1750	175	B&G 1531-2.5BB	1, 2, 3, 4
HRP-1	AHU-1	HEAT RECOVERY	WATER	50	–	–	–	IN-LINE	2	460/3/60	1750	–	INTEGRAL W/ AHU	1, 2
HRP-2	AHU-1	HEAT RECOVERY	WATER	50	–	–	–	IN-LINE	2	460/3/60	1750	–	INTEGRAL W/ AHU	1, 2, 3

NOTES:
1. UNIT SHALL BE ON EMERGENCY POWER.
2. UNIT SHALL BE MOUNTED INSIDE AIR HANDLING UNIT.
3. UNIT IS STANDBY.
4. UNIT SHALL BE PROVIDED WITH VFD.

DRYCOOLER SCHEDULE

MARK	LOCATION	SERVICE	CAPACITY (MBH)	EVAPORATOR GPM	EWT (°F)	LWT (°F)	PD (FT)	DRYCOOLERS AMB (°F)	CFM	FAN No.	FAN HP	ELECTRICAL VOLT/Ø/HZ	FLA	MCA	OPT WT (LBS)	MANUFACTURER & MODEL NO.	REMARKS
DC-1	HIGH ROOF	EAC-1 & -2	–	18.0	–	85	–	104	15,600	4	3/4	460/3/60	10.8	–	845	DATA AIRE #DAFC037	1, 2, 3

NOTES:
1. DRYCOOLER SHALL BE ON EMERGENCY POWER.
2. FACTORY PACKAGED DRYCOOLER WITH INTEGRAL 1.0-HP CIRCULATING PUMP.
3. UNIT SHALL BE SINGLE POINT POWER CONNECTION.

ELECTRIC STEAM HUMIDIFIER SCHEDULE

MARK	SERVICE	CFM	STEAM CAPACITY (LB/HR)	TEMP (F)	RH (%)	ELECTRICAL RATED KW	NOM. AMP	MCP	V/ø/PH	MANUFACTURER / MODEL NO.	REMARKS
H-1-1	1ST FLR	1605	29.57	70	30	11.4	14.3	25	460/3/60	NORTEC NH-030	1, 2
H-1-2	1ST FLR	2495	45.97	70	30	17.2	21.5	35	460/3/60	NORTEC NH-050	1, 2

NOTE:
1. ALL STAINLESS STEEL CONSTRUCTION.
2. UNIT SHALL BE ON EMERGENCY POWER.

AIR HANDLING UNIT AND FAN COIL UNIT SUMMARY SCHEDULE

UNIT		LOCATION/ SERVICE	SCFM DESIGN	SCFM MIN OA	PRE FILTER	FINAL FILTER	HEPA FILTER	HEATING COIL	HEAT RECOVERY COIL	COOLING COIL	SUPPLY FAN	EXH FAN	SOUND TRAP	AFM	OPERATING WEIGHT LBS	MANUFACTURER
AHU-1	SF	HIGH ROOF	24,000	24,000	X	X		–	X	X	X	–	X	X	–	1
	EF		24,000	24,000	X	–	–	–	X	–	–	X	X	X		

(SEE OTHER SCHEDULES: FINAL FILTER through AFM)

NOTES:
1. AIR HANDLING UNITS (AHU) ARE BASED ON HUNTAIR. SEE M3.01 FOR ARRANGEMENT.

AHU/EAC FAN SCHEDULE

UNIT	SYSTEM	SCFM DESIGN	SCFM TOTAL AIR OUTLETS	DESIGN SCFM FAN DATA: RPM	TOTAL SP IN WG	E.S.P.	No. FANS	PER FAN WHEEL DIA IN	PER FAN WHEEL TYPE	MOTOR PER FAN: BHP PER FAN	HP PER FAN	RPM	V/Ø/HZ	MANUFACTURER & MODEL NO	VIBRATION ISOLATOR TYPE	STATIC DEFL. IN	REMARKS
SF-AHU-1	AHU-1	24,000	–	2,127	4.75	3.57	4	22	PLUG	6.36	9.0	1760	460/3/60	INTEGRAL W/ AHU	–	–	1, 2, 3
EF-AHU-1	AHU-1	24,000	–	1,500	2.25	1.75	4	20	PLUG	3.11	5.0	1750	460/3/60	INTEGRAL W/ AHU	–	–	1, 2, 3
EAC-1	–	1,600	–	–	–	0.5	1	–	–	–	1.5	1750	460/3/60	DATA AIRE #DAPW-0434-C-P	–	–	1
EAC-2	–	1,000	–	–	–	0.5	1	–	–	–	0.75	1750	460/3/60	DATA AIRE #DAPW-0434-C-P	–	–	1

NOTES:
1. UNIT SHALL BE ON EMERGENCY POWER.
2. UNIT SHALL BE PROVIDED WITH VARIABLE FREQUENCY DRIVE (VFD).
3. AIR FILTER STATIC PRESSURE DROP ALLOWANCE PRE AND FINAL FILTERS SHALL BE BASED ON INITIAL PD (BOTH PRE & FINAL) + 1-INCH.
4. AIR FILTER STATIC PRESSURE DROP ALLOWANCE FOR EXHAUST AIR FILTER SHALL BE 1-INCH.
5. UNIT SHALL BE PROVIDED WITH INTEGRAL SPRING ISOLATORS.

EXHAUST FAN SCHEDULE

UNIT	SERVICE	FAN DATA: CFM DESIGN	CFM OUTLETS	RPM	TOTAL SP IN WG	BHP	WHEEL DIA IN	WHEEL TYPE	MOTOR HP	RPM	V/Ø/HZ	WEIGHT LBS	MANUFACTURER & MODEL NO	REMARKS
EF-1	DECONTAM	700	–	1366	0.25	0.08	10.875	–	1/6	1725	120/1/60	60	GREENHECK #CUE-095-VG	1, 2, 3
EF-2	COMPRESSOR RM	660	–	1321	0.25	0.07	10.876	–	1/6	1725	120/1/60	60	GREENHECK #CUE-095-VG	1, 2, 3
EF-3	ELECT ROOMS	440	–	1170	0.30	0.05	10.876	–	1/6	1725	120/1/60	60	GREENHECK #CUE-095-VG	1, 2, 3

NOTES:
1. FAN SHALL BE ON EMERGENCY POWER.
2. FAN SHALL BE PROVIDED WITH PRE-FABRICATED ROOF CURB.
3. FAN SHALL BE WITH BACKDRAFT DAMPER.

HEAT RECOVERY COIL SCHEDULE (PRE-COOL)

UNIT	SYSTEM	AIR DATA: CAPACITY MBH SCFM	ACFM	TOTAL	SENSIBLE	EAT °F DB	EAT °F WB	LAT °F DB	LAT °F WB	MAX VEL. FPM	MAX PD IN WG	WATER DATA: MAX GPM	EWT °F	LWT °F	MAX PD FT HD	MIN ROWS DEEP	FPI (MAX)	REMARKS
HRC-S-1	AHU-1	22,364	24,000	396.3	396.3	101.0	70.0	84.8	64.9	500	0.42	54.4	79.9	94.6	12.93	8	8	NOTE 1,2,3
HRC-E-1	AHU-1	23,776	24,000	397.1	397.1	75	–	90.4	–	500	0.57	54.4	94.6	79.9	13.05	8	10	NOTE 1,2,4

NOTES:
1. MINIMUM EFFECTIVENESS SHRC = 60.0%
   SELECT COILS FOR SCFM, FACE VELOCITY AND AIR PD SHALL BE AT ACFM.
   EWT TO SHRC SHALL BE EQUAL TO CORRESPONDING LWT OF EHRC.
   EWT TO EHRC SHALL BE EQUAL TO CORRESPONDING LWT OF SHRC.
2. USE COILS SELECTION AT 300 FT. ABOVE SEA LEVEL.
3. SHRC SHALL BE COPPER FINS AND COPPER TUBE WITH 1/2" O.D.
4. EHRC SHALL BE ALUMINUM FINS AND COPPER TUBE WITH 1/2" O.D.

HEAT RECOVERY COIL SCHEDULE (PRE-HEAT)

UNIT	SYSTEM	AIR DATA: CAPACITY MBH SCFM	ACFM	TOTAL	SENSIBLE	EAT °F DB	EAT °F WB	LAT °F DB	LAT °F WB	MAX VEL. FPM	MAX PD IN WG	WATER DATA: MAX GPM	EWT °F	LWT °F	MAX PD FT HD	MIN ROWS DEEP	FPI (MAX)	REMARKS
HRC-S-1	AHU-1	25,961	24,000	697.16	697.16	30	–	54.8	–	500	0.46	70.2	62.1	42.3	13.85	8	8	NOTE 1
HRC-E-1	AHU-1	23,619	24,000	696,7	475.7	70	62	51.7	51.6	500	0.72	70.2	42.3	62.1	9.99	8	10	NOTE 2

NOTES:
1. MINIMUM EFFECTIVENESS SHRC = 60.0%
   SELECT COILS FOR SCFM, FACE VELOCITY AND AIR PD SHALL BE AT ACFM.
   EWT TO SHRC SHALL BE EQUAL TO CORRESPONDING LWT OF EHRC.
   EWT TO EHRC SHALL BE EQUAL TO CORRESPONDING LWT OF SHRC.
2. USE COILS SELECTION AT 100 FT. ABOVE SEA LEVEL.

AIR-COOLED CHILLER SCHEDULE

MARK	LOCATION/SERVICE	NOMINAL CAPACITY (TON)	IPLV	EVAPORATOR GPM	EWT (°F)	LWT (°F)	PD (FT)	CONDENSER OUTDOOR (°F)	CFM	FAN No.	FAN HP	COMPRESSOR No.	HP	REFRIG.	ELECTRICAL VOLT/Ø/HZ	FLA	WSA	MCA	OPT WT (LBS)	MANUFACTURER & MODEL NO.	REMARKS
CH-1	HIGH ROOF	102.7	15.3	246.4	54	44	12.2	100	81,600	8	2.0	6	–	R-410A	460/3/60	–	–	221	7120	McQUAY AGZ110D	1, 2, 3, 4, 5

NOTES:
1. EVAPORATOR FOULING FACTOR 0.00010.
2. TANDEM SCROLL COMPRESSORS.
3. UNIT SHALL BE PROVIDED WITH A SOUND PACKAGE.
4. UNIT SHALL BE SINGLE POINT POWER CONNECTION.
5. MINIMUM WATER FLOW 159.1 GPM.

Issues & Revisions: | Date

CONSULTANTS:

TED JACOB ENGINEERING GROUP
LEADING BY INNOVATION
JOB NO. MEI-001
1763 BROADWAY, OAKLAND, CA 94612-2105
(510) 763-4880 FAX (510) 763-5099

Copyright © 2013 Ted Jacob Engineering Group. All rights reserved. No part of this work may be reproduced, changed, copied or transmitted in any form or by any means, electronic or mechanical, including, but not retrieval system, except as may be expressly permitted in writing from TJEG.

REGISTERED PROFESSIONAL ENGINEER TED JACOB No. M18692 Exp. 9-30-1_ MECHANICAL STATE OF CALIFORNIA

KEY PLAN

ARCHITECT/ENGINEERS:

MEI architecture + interiors
239 9TH STREET, SUITE 201
SAN FRANCISCO, CA 94103
T (415) 682-7376 F (415) 682-7339
www.meiarchitects.com

Drawing Title: **SCHEDULES**

Approved: Project Director

Project Title: **CONSOLIDATE / EXPAND MEDICAL PROCEDURES MINOR (CEMP)**

Location: **VANCHCS - MATHER, CA**

Date: APRIL 22, 2014 | Checked: PM | Drawn: TH

Project Number: 612-111

Building Number:

Drawing Number: **M0.02**
Dwg. -- of --

Office of Facilities Management

Department of Veterans Affairs

FULLY SPRINKLERED **100% CONSTRUCTION DOCUMENTS**

ROOM VENTILATION AND PRESSURIZATION SCHEDULE (100% OUTSIDE AIR SYSTEMS)

ROOM NO.	ROOM NAME	CMC TABLE 4A – AREA DESIGNATION	AREA	VOLUME	SYSTEM	100% O.S.A. A.C./HR MIN REQ'D T-24	100% O.S.A. A.C./HR DESIGN	100% O.S.A. S.A.(CFM) MIN REQ'D T-24	100% O.S.A. S.A.(CFM) DESIGN	NOT 100% O.S.A. A.C./HR MIN REQ'D T-24	NOT 100% O.S.A. A.C./HR DESIGN	NOT 100% O.S.A. S.A.(CFM) MIN REQ'D T-24	NOT 100% O.S.A. S.A.(CFM) DESIGN	EXH. AIR CFM	MAX. RET. AIR CFM	ROOM PRESS
			FT^2	FT^3												
101	ENTRY VESTIBULE	PATIENT AREA CORRIDOR	117	1053	AHU-1	2	16.2	35	285	–	–	–	–	285		E
102	LOBBY	PATIENT AREA CORRIDOR	279	2511	AHU-1	2	20.7	84	865	–	–	–	–	865		E
102	LOBBY	PATIENT AREA CORRIDOR	142	1278	AHU-1	2	16.2	43	345	–	–	–	–	345		E
102	LOBBY/HALLWAY	PATIENT AREA CORRIDOR	548	4932	AHU-1	2	6.4	164	525	–	–	–	–	300		E
102A	CONSULTATION	OFFICE SUPPORT	115	1035	AHU-1	4	12.8	69	220	–	–	–	–	220		E
103	RECEPTION	OFFICE SUPPORT	123	1107	AHU-1	4	6	74	110	–	–	–	–	110		E
104	INTAKE NURSE	OFFICE SUPPORT	111	999	AHU-1	4	6	67	100	–	–	–	–	100		E
106	ELEV. MACHINE	OFFICE SUPPORT	84	756	AHU-1	4	15.9	50	200	–	–	–	–	200		E
107	PUBLIC TOILET	TOILET ROOM	73	584	AHU-1	10	12.8	97	50	–	–	–	–	125		N
108	HAV	JANITORS? CLOSET, HOUSEKEEPING ROOM	62	496	AHU-1	10	15.1	83	50	–	–	–	–	125		N
109	PUBL. FAMILY TOILET	TOILET ROOM	75	600	AHU-1	10	12.5	100	50	–	–	–	–	125		N
111	PRE-OP/RECOVERY	RECOVERY ROOM	292	2628	AHU-1	6	6.1	263	265	–	–	–	–	265		E
111	PRE-OP/RECOVERY	RECOVERY ROOM	521	4689	AHU-1	6	6.1	469	475	–	–	–	–	475		E
111A	PAT. TOILET/SHOWER	TOILET ROOM	111	888	AHU-1	10	10.1	148	75	–	–	–	–	150		N
111B	PAT. TOILET	TOILET ROOM	88	704	AHU-1	10	10.7	117	50	–	–	–	–	125		N
111C	PRE-OP/RECOVERY /NURSE STATION	RECOVERY ROOM	984	8856	AHU-1	6	6	886	890	–	–	–	–	740		E
111D	MEDICATION PREP	MEDICATION ROOM	122	1098	AHU-1	2	6.8	37	125	–	–	–	–	50		P
112	PATIENT HALLWAY	PATIENT AREA CORRIDOR	682	6138	AHU-1	2	6	205	615	–	–	–	–	315		E
112	PATIENT HALLWAY	PATIENT AREA CORRIDOR	723	6507	AHU-1	2	16.6	217	1805	–	–	–	–	955		E
112	PATIENT HALLWAY	PATIENT AREA CORRIDOR	154	1386	AHU-1	2	8.7	46	200	–	–	–	–	200		E
113	STAFF TOILET	TOILET ROOM	74	592	AHU-1	10	12.7	99	50	–	–	–	–	125		N
114	TELECOM	TELECOM/ELECTRICAL	159	1431	AHU-1	4	6.1	95	145	–	–	–	–	145		E
115	ELECTRICAL	TELECOM/ELECTRICAL	110	990	AHU-1	4	6.1	66	100	–	–	–	–	100		E
116	PROCEDURE	BRONCHOSCOPY AND ENDOSCOPY	267	2670	AHU-1	12	15.7	534	535	–	–	–	–	700		N
117	PROCEDURE	BRONCHOSCOPY AND ENDOSCOPY	267	2670	AHU-1	12	15.7	534	535	–	–	–	–	700		N
118	PROCEDURE	BRONCHOSCOPY AND ENDOSCOPY	267	2670	AHU-1	12	15.7	534	535	–	–	–	–	700		N
119	PROCEDURE ERCP	BRONCHOSCOPY AND ENDOSCOPY	359	3590	AHU-1	12	15.7	718	720	–	–	–	–	940		N
121	PROCEDURE ERCP	BRONCHOSCOPY AND ENDOSCOPY	307	3070	AHU-1	12	15.6	614	615	–	–	–	–	800		N
122	PROCEDURE GI /BRONCHOSCOPY	BRONCHOSCOPY AND ENDOSCOPY	264	2640	AHU-1	12	15.7	528	530	–	–	–	–	690		N
123	PROCEDURE BRONCHOSCOPY /FLUOROSCOPY	BRONCHOSCOPY AND ENDOSCOPY	313	3130	AHU-1	12	15.7	626	630	–	–	–	–	820		N
124	PATIENT HALLWAY	PATIENT AREA CORRIDOR	140	1260	AHU-1	2	11.2	42	235	–	–	–	–	235		E
124	STAFF HALLWAY	CORRIDOR	525	4725	AHU-1	2	6	158	475	–	–	–	–	200		E
126	PHYSICIANS/FELLOWS	OFFICE SUPPORT	416	3744	AHU-1	4	7.5	250	470	–	–	–	–	470		E
127	CLEAN LINEN	CLEAN LINEN STORAGE	46	368	AHU-1	2	20.4	12	125	–	–	–	–	50		P
128	CLEAN UTILITY	CLEAN WORKROOM	85	680	AHU-1	4	11	45	125	–	–	–	–	50		P
129	CLEAN STORAGE	CLEAN LINEN STORAGE	194	1552	AHU-1	2	6	52	155	–	–	–	–	80		P
130	CHANGING	OFFICE SUPPORT	55	495	AHU-1	4	6.1	33	50	–	–	–	–	50		E
131	SCOPE REPROCESSING	SCOPE REPROCESSING	282	2538	AHU-1	10	13	423	425	–	–	–	–	550		N
132	DECONTAMINATION	ER DECONTAMINATION	248	2232	AHU-1	12	17.1	446	510	–	–	–	–	635		N
133	SOILED LINEN	SOILED LINEN SORTING AND STORAGE	77	616	AHU-1	10	14.6	103	75	–	–	–	–	150		N
134	SOILED UTILITY	SOILED WORKROOM (UTILITY ROOM)	106	848	AHU-1	4	12.4	57	100	–	–	–	–	175		N
136	MECHANICAL	OFFICE SUPPORT	209	1881	AHU-1	4	6.9	125	215	–	–	–	–	215		E
–	–	–	–	–	–	–	–	–	–	–	–	–	–	–	–	–
–	–	–	–	–	–	–	–	–	–	–	–	–	–	–	–	–
–	–	–	–	–	–	–	–	–	–	–	–	–	–	–	–	–
–	–	–	–	–	–	–	–	–	–	–	–	–	–	–	–	–
–	–	–	–	–	–	–	–	–	–	–	–	–	–	–	–	–
–	–	–	–	–	–	–	–	–	–	–	–	–	–	–	–	–
–	–	–	–	–	–	–	–	–	–	–	–	–	–	–	–	–
201	HALLWAY	PATIENT AREA CORRIDOR	98	882	AHU-1	2	42.2	29	620	–	–	–	–	620		E
201	HALLWAY	PATIENT AREA CORRIDOR	509	4581	AHU-1	2	6.2	153	475	–	–	–	–	250		E
201A	WAITING	PATIENT AREA CORRIDOR	127	1143	AHU-1	2	10.5	38	200	–	–	–	–	200		E
202	PATIENT EDUCATION	OFFICE SUPPORT	475	4275	AHU-1	4	14.4	285	1025	–	–	–	–	1025		E
203	INTAKE NURSE/SCHEDULING	OFFICE SUPPORT	186	1674	AHU-1	4	6.1	112	170	–	–	–	–	170		E
204	HALLWAY	PATIENT AREA CORRIDOR	461	4149	AHU-1	2	6	138	415	–	–	–	–	175		E
206	EXAM	TREATMENT AND EXAMINATION ROOMS	127	1143	AHU-1	6	9.4	114	180	–	–	–	–	180		E
207	EXAM	TREATMENT AND EXAMINATION ROOMS	127	1143	AHU-1	6	9.4	114	180	–	–	–	–	180		E
208	EXAM	TREATMENT AND EXAMINATION ROOMS	127	1143	AHU-1	6	9.4	114	180	–	–	–	–	180		E
209	EXAM	TREATMENT AND EXAMINATION ROOMS	127	1143	AHU-1	6	9.4	114	180	–	–	–	–	180		E
211	ELECTRICAL	TELECOM/ELECTRICAL	90	810	AHU-1	4	14.8	54	200	–	–	–	–	200		E
212	PROCEDURE	BRONCHOSCOPY AND ENDOSCOPY	269	2690	AHU-1	12	15.7	538	540	–	–	–	–	705		N
213	EXAM	TREATMENT AND EXAMINATION ROOMS	138	1242	AHU-1	6	6.5	124	135	–	–	–	–	135		E
214	EXAM	TREATMENT AND EXAMINATION ROOMS	138	1242	AHU-1	6	6.5	124	135	–	–	–	–	135		E
215	PATIENT TOILET	TOILET ROOM	72	576	AHU-1	10	13	96	50	–	–	–	–	125		N
216	HAC	JANITORS? CLOSET, HOUSEKEEPING ROOM	40	320	AHU-1	10	23.4	53	50	–	–	–	–	125		N
217	ACCESS TO ROOF	OFFICE SUPPORT	89	801	AHU-1	4	7.5	53	100	–	–	–	–	100		E
218	PUBLIC TOILET	TOILET ROOM	77	616	AHU-1	10	12.2	103	50	–	–	–	–	125		N
219	PUBLIC TOILET	TOILET ROOM	65	520	AHU-1	10	14.4	87	50	–	–	–	–	125		N
221	TELECOM	TELECOM/ELECTRICAL	135	1215	AHU-1	4	6.2	81	125	–	–	–	–	125		E
226	HALLWAY	PATIENT AREA CORRIDOR	427	3843	AHU-1	2	6	128	385	–	–	–	–	160		E
227	OFFICE	OFFICE SUPPORT	129	1161	AHU-1	4	9	77	175	–	–	–	–	175		E
228	OFFICE	OFFICE SUPPORT	129	1161	AHU-1	4	9	77	175	–	–	–	–	175		E
229	CHIEF'S OFFICE	OFFICE SUPPORT	186	1674	AHU-1	4	9.7	112	270	–	–	–	–	270		E
231	OFFICE	OFFICE SUPPORT	129	1161	AHU-1	4	8.3	77	160	–	–	–	–	160		E
232	OFFICE	OFFICE SUPPORT	129	1161	AHU-1	4	8.3	77	160	–	–	–	–	160		E
233	OFFICE	OFFICE SUPPORT	129	1161	AHU-1	4	8.3	77	160	–	–	–	–	160		E
234	STAFF LOUNGE	OFFICE SUPPORT	255	2295	AHU-1	4	8.6	153	330	–	–	–	–	330		E
236	OFFICE	OFFICE SUPPORT	132	1188	AHU-1	4	6.6	79	130	–	–	–	–	130		E
237	OFFICE	OFFICE SUPPORT	132	1188	AHU-1	4	6.6	79	130	–	–	–	–	130		E
238	OFFICE	OFFICE SUPPORT	132	1188	AHU-1	4	6.6	79	130	–	–	–	–	130		E
239	STAFF TOILET	TOILET ROOM	65	520	AHU-1	10	14.4	87	50	–	–	–	–	125		N
240	AV CONTROL	OFFICE SUPPORT	74	666	AHU-1	4	18	44	200	–	–	–	–	200		E
241	COPY	OFFICE SUPPORT	56	504	AHU-1	4	13.1	34	110	–	–	–	–	110		E
242	STAFF TOILET/SHOWER	TOILET ROOM	128	1024	AHU-1	10	13.2	171	150	–	–	–	–	225		N
243	LOCKER	LOCKER	152	1368	AHU-1	6	6.6	137	75	–	–	–	–	150		N
–	–	–	–	–	–	–	–	–	–	–	–	–	–	–	–	–
–	–	–	–	–	–	–	–	–	–	–	–	–	–	–	–	–
–	–	–	–	–	–	–	–	–	–	–	–	–	–	–	–	–
–	–	–	–	–	–	–	–	–	–	–	–	–	–	–	–	–
–	–	–	–	–	–	–	–	–	–	–	–	–	–	–	–	–
–	–	–	–	–	–	–	–	–	–	–	–	–	–	–	–	–
–	–	–	–	–	–	–	–	–	–	–	–	–	–	–	–	–

Issues & Revisions:	Date

CONSULTANTS:

TED JACOB ENGINEERING GROUP
LEADING BY INNOVATION
JOB NO. MEI-001
1763 BROADWAY, OAKLAND, CA 94612-2105
(510) 763-4880 FAX (510) 763-5099

Copyright @ 2013 Ted Jacob Engineering Group. All rights reserved. No part of this work may be reproduced, changed, copied or transmitted in any form or by any means, electronic or mechanical, including, but not retrieval system, except as may be expressly permitted in writing from TJEG.

REGISTERED PROFESSIONAL ENGINEER JACOB No. M18692 Exp. 12-31-14 MECHANICAL STATE OF CALIFORNIA

KEY PLAN

ARCHITECT/ENGINEERS:

MEI architecture + interiors
239 9TH STREET, SUITE 201
SAN FRANCISCO, CA 94103
T (415) 682-7376 F (415) 682-7339
www.meiarchitects.com

Drawing Title: **SCHEDULES**

Approved: Project Director

Project Title: **CONSOLIDATE / EXPAND MEDICAL PROCEDURES MINOR (CEMP)**

Location: **VANCHCS - MATHER, CA**

Date: **APRIL 22, 2014** | Checked: **PM** | Drawn: **TH**

Project Number: **612-111**

Building Number:

Drawing Number: **M0.03** Dwg. -- of --

Office of Facilities Management

Department of Veterans Affairs

VA FORM 08-6231, OCT 1978 04/28/2014 1:55:46 PM

FULLY SPRINKLERED **100% CONSTRUCTION DOCUMENTS**

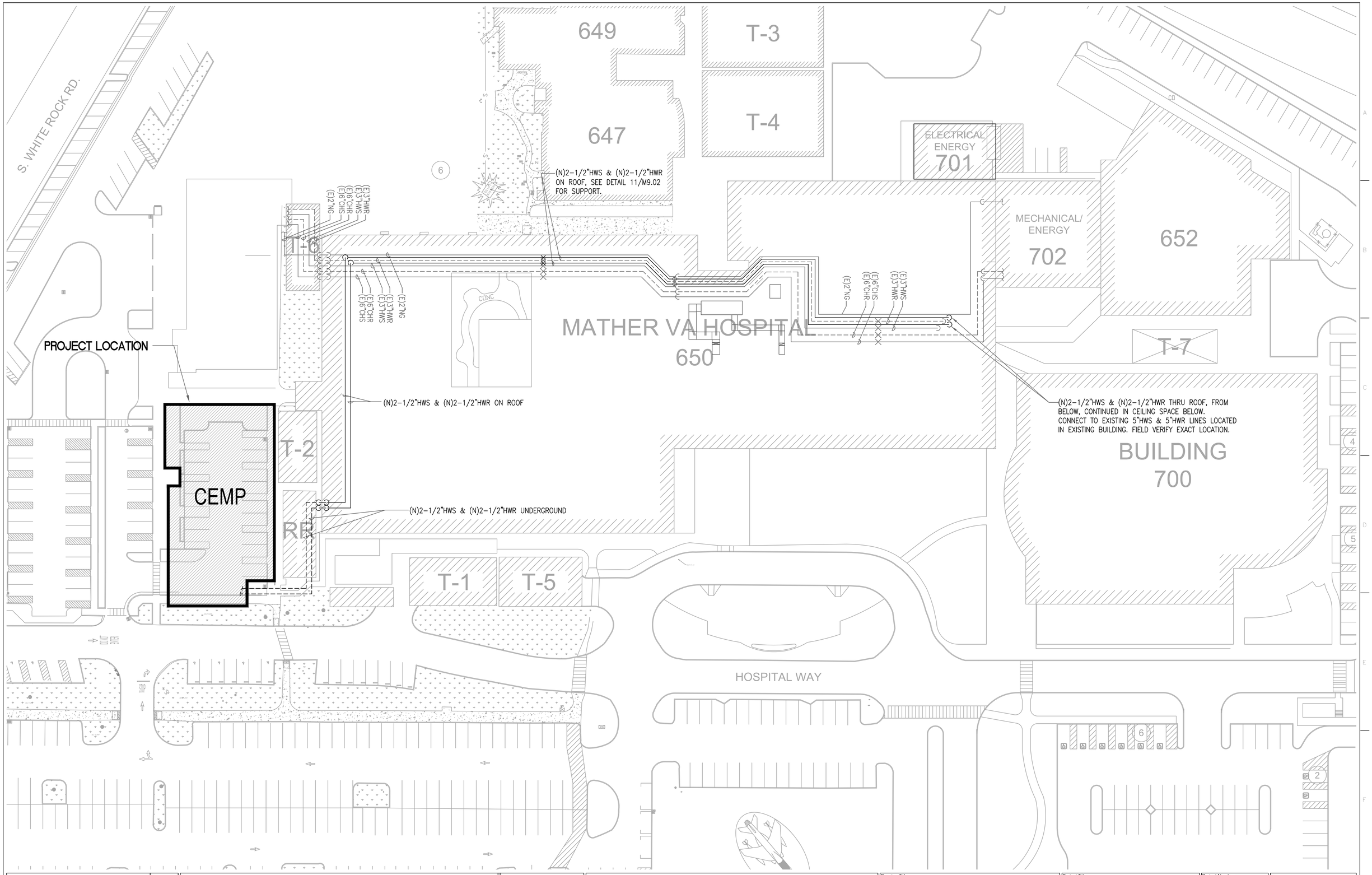

Issues & Revisions:	Date

CONSULTANTS:

TED JACOB ENGINEERING GROUP
LEADING BY INNOVATION
JOB NO. MEI-001
1763 BROADWAY, OAKLAND, CA 94612-2105
(510) 763-4880 FAX (510) 763-5099

Copyright © 2013 Ted Jacob Engineering Group. All rights reserved. No part of this work may be reproduced, changed, copied or transmitted in any form or by any means, electronic or mechanical, including, but not retrieval system, except as may be expressly permitted in writing from TJEG.

REGISTERED PROFESSIONAL ENGINEER JACOB No. M18692 Exp. 12-31-14 MECHANICAL STATE OF CALIFORNIA

KEY PLAN

ARCHITECT/ENGINEERS:

MEI architecture + interiors
239 9TH STREET, SUITE 201
SAN FRANCISCO, CA 94103
T (415) 682-7376 F (415) 682-7339
www.meiarchitects.com

Drawing Title: **SITE PLAN**

Approved: Project Director

Project Title: **CONSOLIDATE / EXPAND MEDICAL PROCEDURES MINOR (CEMP)**

Location: **VANCHCS - MATHER, CA**

Date: **APRIL 22, 2014** | Checked: **PM** | Drawn: **TH**

Project Number: **612-111**

Building Number:

Drawing Number: **M1.01**
Dwg. -- of --

Office of Facilities Management

Department of Veterans Affairs

VA FORM 08-6231, OCT 1978 04/28/2014 1:55:01 PM

FULLY SPRINKLERED **100% CONSTRUCTION DOCUMENTS**

KEY NOTES:

1. 120V POWER SOURCE FOR BMS.
2. 120V POWER SOURCE FOR BTU METER.
3. EMERGENCY CHILLED WATER SUPPLY AND RETURN CONNECTION.

SHEET NOTES:

1. FOR EXACT LOCATION OF CEILING DIFFUSERS AND GRILLES, SEE ARCHITECTURAL CEILING PLAN.
2. WHERE NOT SHOWN ON PLAN, DUCT SIZES TO DIFFUSER SHALL BE SIZED AS FOLLOWS.

CFM RANGE	DUCT SIZE
A: 30 – 120	6ø
B: 125 – 200	8ø
C: 205 – 300	10ø
D: 305 – 400	12ø
E: 405 – 700	14ø

3. WHERE CONFLICT BETWEEN FLOOR PLAN TERMINAL UNIT (TU)SCHEDULE, TERMINAL UNIT INLET SHALL BE SIZED AS FOLLOWS:

CFM RANGE	TU INLET SIZE
A: 50 – 250	6ø
B: 225 – 420	8ø
C: 425 – 800	10ø
D: 805 – 1200	12ø
E: 1205 – 1700	14ø
F: 1705 – 2300	16ø

4. PROVIDE MANUAL AIR VENT AT HIGH POINT OF PIPE WITH DRAIN.
5. HOT WATER PIPE SIZES NOT SHOWN SHALL BE SIZED NOT TO EXCEED 3-FEET OF HEAD PER 100-FEET LENGTH.
6. FOR TERMINAL UNIT REHEAT COIL PIPING ASSEMBLY DETAIL, SEE 6/M9.02.
7. FOR SECONDARY HEATING HOT WATER PUMP, SEE DETAIL 2/M4.01.
8. FOR EAC MOUNTING, SEE DETAIL 8/M9.03.
9. FOR PUMP(HWP) MOUNTING, SEE DETAIL 9/M9.03.

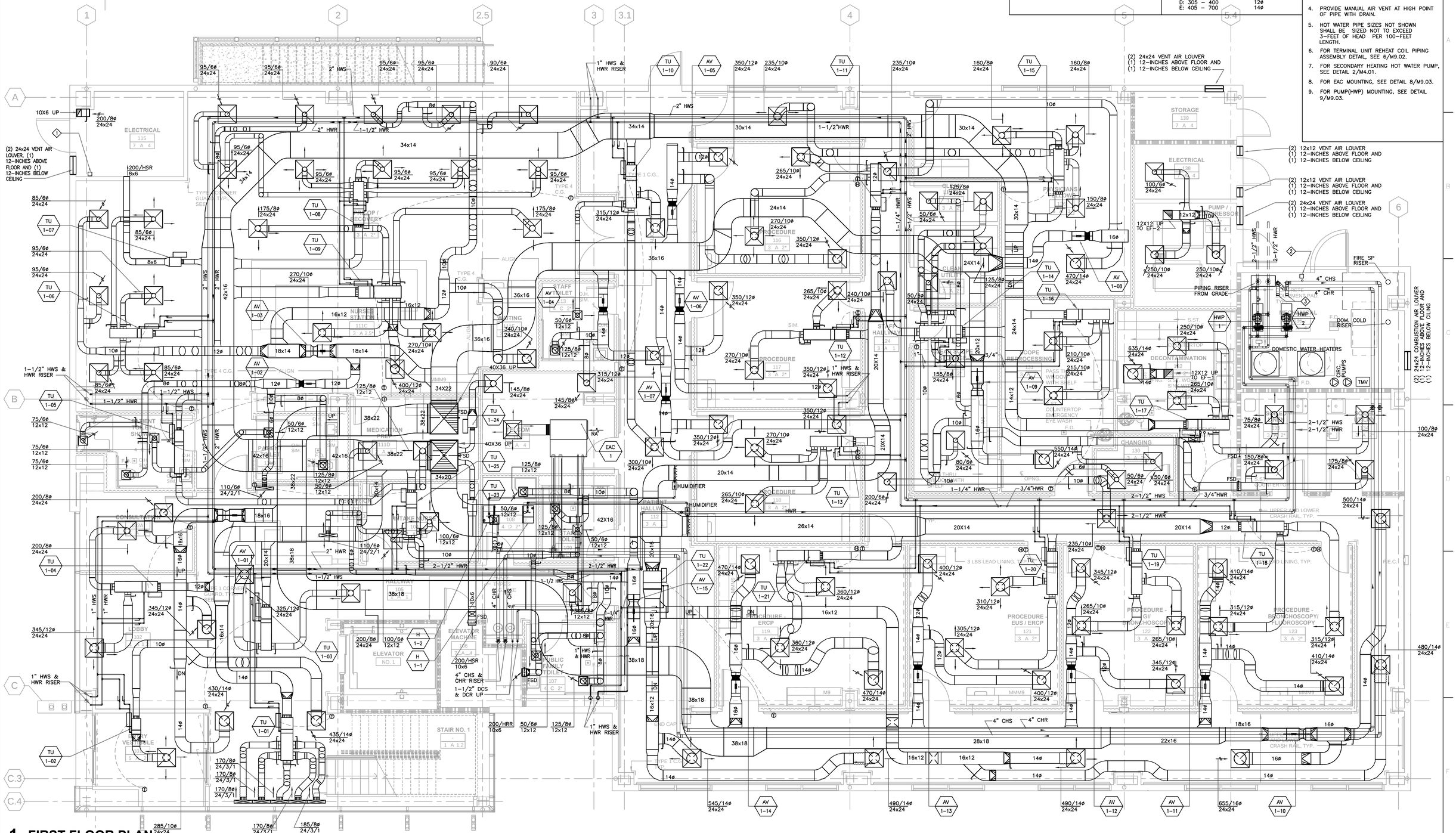

1 FIRST FLOOR PLAN

1/4" = 1'-0"

Issues & Revisions:	Date

CONSULTANTS:

TED JACOB ENGINEERING GROUP

LEADING BY INNOVATION

JOB NO. MEI-001

1763 BROADWAY, OAKLAND, CA 94612-2105
(510) 763-4880 FAX (510) 763-5099

Copyright © 2013 Ted Jacob Engineering Group. All rights reserved. No part of this work may be reproduced, changed, copied or transmitted in any form or by any means, electronic or mechanical, including, but not retrieval system, except as may be expressly permitted in writing from TJEG.

REGISTERED PROFESSIONAL ENGINEER TED JACOB No. M18692 Exp. 9-30-14 MECHANICAL STATE OF CALIFORNIA

KEY PLAN

ARCHITECT/ENGINEERS:

MEI architecture + interiors

239 9TH STREET, SUITE 201
SAN FRANCISCO, CA 94103
T (415) 682-7376 F (415) 682-7339
www.meiarchitects.com

Drawing Title: FIRST FLOOR MECHANICAL PLAN

Approved: Project Director

Project Title: CONSOLIDATE / EXPAND MEDICAL PROCEDURES MINOR (CEMP)

Location: VANCHCS - MATHER, CA

Date	Checked	Drawn
APRIL 22, 2014	PM	TH

Project Number: 612-111

Building Number:

Drawing Number: M2.01

Dwg. -- of --

Office of Facilities Management

Department of Veterans Affairs

VA FORM 08-6231, OCT 1978 04/28/2014 2:03:44 PM

FULLY SPRINKLERED 100% CONSTRUCTION DOCUMENTS

KEY NOTES:

1. 120V POWER SOURCE FOR BMS.
2. CO SENSOR

SHEET NOTES:

1. FOR EXACT LOCATION OF CEILING DIFFUSERS AND GRILLES, SEE ARCHITECTURAL CEILING PLAN.
2. WHERE NOT SHOWN ON PLAN, DUCT SIZES TO DIFFUSER SHALL BE SIZED AS FOLLOWS.

CFM RANGE	DUCT SIZE
A: 30 – 120	6ø
B: 125 – 200	8ø
C: 205 – 300	10ø
D: 305 – 400	12ø
E: 405 – 700	14ø

3. WHERE CONFLICT BETWEEN FLOOR PLAN TERMINAL UNIT (TU)SCHEDULE, TERMINAL UNIT INLET SHALL BE SIZED AS FOLLOWS:

CFM RANGE	TU INLET SIZE
A: 50 – 250	6ø
B: 225 – 420	8ø
C: 425 – 800	10ø
D: 805 – 1200	12ø
E: 1205 – 1700	14ø
F: 1705 – 2300	16ø

4. PROVIDE MANUAL AIR VENT AT HIGH POINT OF PIPE WITH DRAIN.
5. HOT WATER PIPE SIZES NOT SHOWN SHALL BE SIZED NOT TO EXCEED 3-FEET OF HEAD PER 100-FEET LENGTH.
6. FOR TERMINAL UNIT REHEAT COIL PIPING ASSEMBLY DETAIL, SEE 6/M9.02.
7. FOR EAC MOUNTING, SEE DETAIL 8/M9.03.
8. FOR EXHAUST FAN (EF) MOUNTING, SEE DETAIL 7/M9.03.

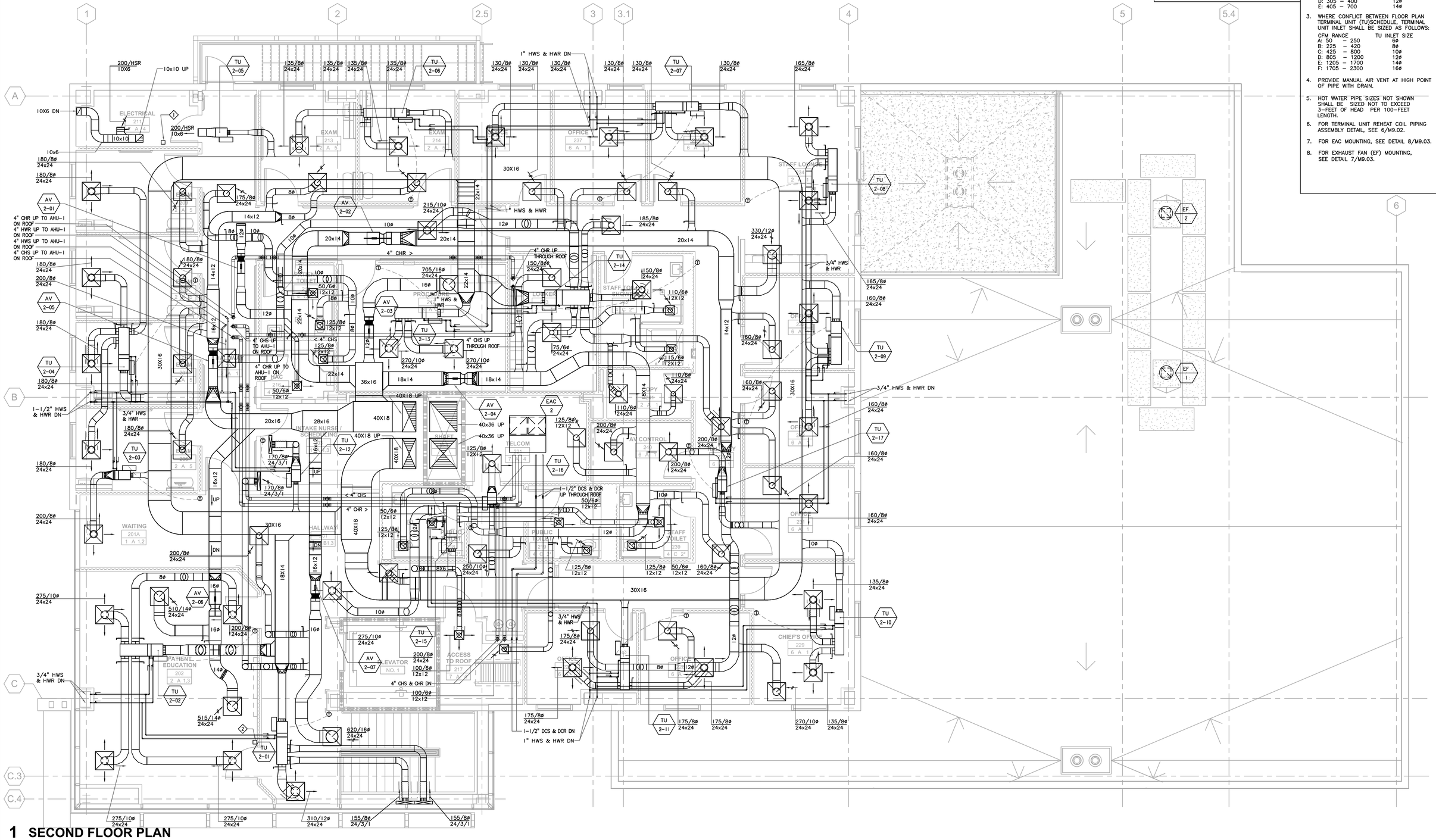

1 SECOND FLOOR PLAN

1/4" = 1'-0"

Issues & Revisions:	Date

CONSULTANTS:

TED JACOB ENGINEERING GROUP
LEADING BY INNOVATION
JOB NO. MEI-001
1763 BROADWAY, OAKLAND, CA 94612-2105
(510) 763-4880 FAX (510) 763-5099

Copyright © 2013 Ted Jacob Engineering Group. All rights reserved. No part of this work may be reproduced, changed, copied or transmitted in any form or by any means, electronic or mechanical, including, but not retrieval system, except as may be expressly permitted in writing from TJEG.

REGISTERED PROFESSIONAL ENGINEER TED JACOB No. M18692 Exp. 12-31-15 MECHANICAL CALIFORNIA

KEY PLAN

ARCHITECT/ENGINEERS:

MEI architecture + interiors
239 9TH STREET, SUITE 201
SAN FRANCISCO, CA 94103
T (415) 682-7376 F (415) 682-7339
www.mearchitects.com

Drawing Title: **SECOND FLOOR MECHANICAL PLAN**

Approved: Project Director

Project Title: **CONSOLIDATE / EXPAND MEDICAL PROCEDURES MINOR (CEMP)**

Location: **VANCHCS - MATHER, CA**

Date: **APRIL 22, 2014** | Checked: **PM** | Drawn: **TH**

Project Number: **612-111**

Building Number:

Drawing Number: **M2.02** Dwg. -- of --

Office of Facilities Management

Department of Veterans Affairs

VA FORM 08-6231, OCT 1978

04/28/2014 2:02:41 PM

FULLY SPRINKLERED

100% CONSTRUCTION DOCUMENTS

SHEET NOTES:

1. FOR AIR HANDLING UNIT (AHU) MOUNTING DETAIL, SEE 1/M9.01.
2. FOR AIR COOLED CHILLER (CH) MOUNTING DETAIL, SEE 5/M9.03.
3. FOR DRY COOLER (DC) MOUNTING DETAIL, SEE 6/M9.03.
4. FOR EXHAUST FAN (EF) MOUNTING DETAIL, SEE DETAIL 7/M9.03.
5. FOR CHILLED AND DRY COOLER PIPING, SEE DETAIL 1/M4.01
6. FOR HEAT RECOVERY PIPING, SEE DETAIL 3/M4.01.
7. FOR AHU COMPONENTS DESIGNATIONS AND DIMENSIONS REFER TO 1/M3.01.

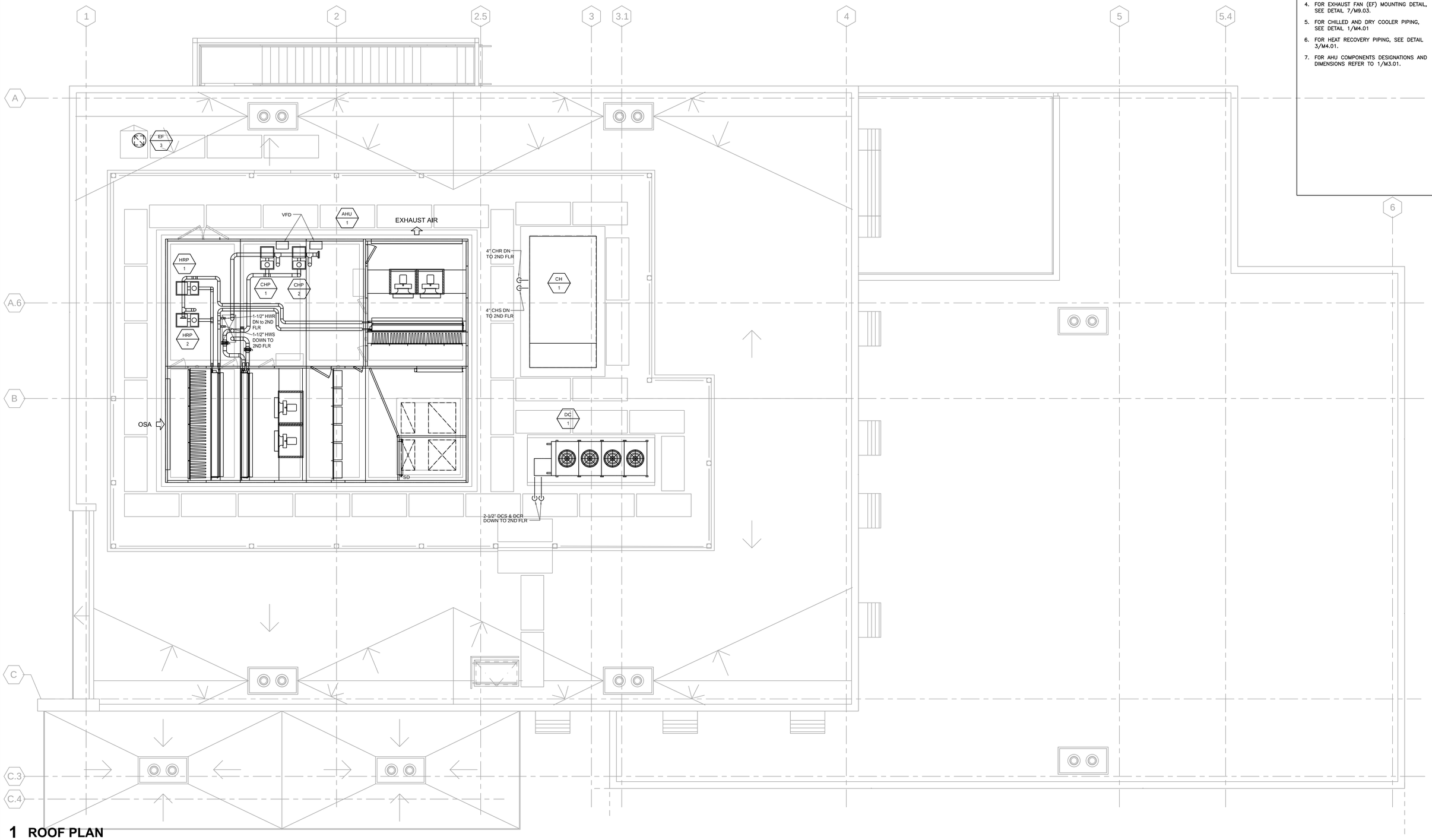

1 ROOF PLAN

1/4" = 1'-0"

Issues & Revisions:	Date

CONSULTANTS:

TED JACOB ENGINEERING GROUP
LEADING BY INNOVATION
JOB NO. MEI-001
1763 BROADWAY, OAKLAND, CA 94612-2105
(510) 763-4880 FAX (510) 763-5099

Copyright @ 2013 Ted Jacob Engineering Group. All rights reserved. No part of this work may be reproduced, changed, copied or transmitted in any form or by any means, electronic or mechanical, including, but not retrieval system, except as may be expressly permitted in writing from TJEG.

REGISTERED PROFESSIONAL ENGINEER TED JACOB No. M18692 Exp. 12-31-14 MECHANICAL STATE OF CALIFORNIA

KEY PLAN

ARCHITECT/ENGINEERS:

MEI architecture + interiors
239 9TH STREET, SUITE 201
SAN FRANCISCO, CA 94103
T (415) 682-7376 F (415) 682-7339
www.meiarchitects.com

Drawing Title: **ROOF MECHANICAL PLAN**

Approved: Project Director

Project Title: **CONSOLIDATE / EXPAND MEDICAL PROCEDURES MINOR (CEMP)**

Location: **VANCHCS - MATHER, CA**

Date: **APRIL 22, 2014** | Checked: **PM** | Drawn: **TH**

Project Number: **612-111**

Building Number:

Drawing Number: **M2.03**
Dwg. -- of --

Office of Facilities Management

Department of Veterans Affairs

VA FORM 08-6231, OCT 1978 04/28/2014 2:02:02 PM

FULLY SPRINKLERED **100% CONSTRUCTION DOCUMENTS**

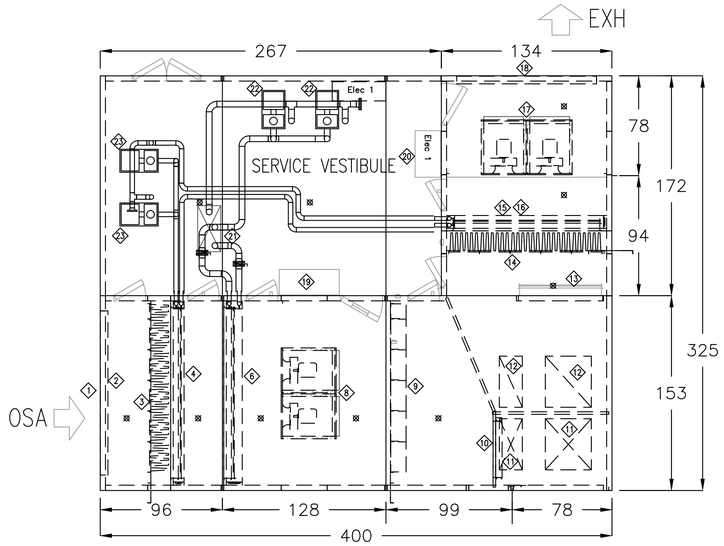

PLAN

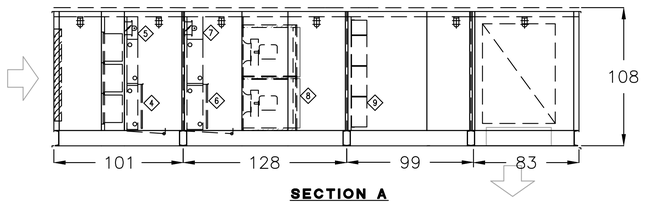

SECTION A

1 / - **AHU-1.**
SCALE: NONE

KEY NOTES:

1. OUTSIDE AIR LOUVER
2. MOISTURE ELIMINATOR
3. PRE-FILTER SECTION, PF-1 & PF-2
4. OUTSIDE AIR HEAT RECOVERY COIL (HRC), HRC-S-1
5. OUTSIDE AIR HRC BYPASS DAMPER
6. COOLING COIL, CC-1
7. COOLING COIL BYPASS DAMPER
8. SUPPLY FAN ARRAY, SF-AHU-1
9. FINAL FILTER SECTION, FF-1
10. SUPPLY AIR ISOLATION DAMPER
11. SUPPLY AIR DISCHARGE OPENING
12. EXHAUST AIR INLET OPENING
13. EXHAUST AIR INLET ISOLATION DAMPER
14. EXHAUST AIR FILTER SECTION, PF-E-1
15. EXHAUST AIR HEAT RECOVERY COIL (HRC), HRC-E-1
16. EXHAUST AIR HRC BYPASS DAMPER
17. EXHAUST FAN ARRAY, EF-AHU-1
18. EXHAUST AIR LOUVER
19. SUPPLY AIR FANS CONTROL PANEL
20. EXHAUST AIR FANS CONTROL PANEL
21. CHILLED WATER PIPING STUB-OUT
22. CHILLED WATER RECIRCULATING PUMP
23. HEAT RECOVERY RECIRCULATING PUMP

Issues & Revisions:	Date

CONSULTANTS:

TED JACOB ENGINEERING GROUP
LEADING BY INNOVATION
JOB NO. MEI-001
1763 BROADWAY, OAKLAND, CA 94612-2105
(510) 763-4880 FAX (510) 763-5099

Copyright © 2013 Ted Jacob Engineering Group. All rights reserved. No part of this work may be reproduced, changed, copied or transmitted in any form or by any means, electronic or mechanical, including, but not retrieval system, except as may be expressly permitted in writing from TJEG.

REGISTERED PROFESSIONAL ENGINEER TED JACOB No. M18692 Exp. 30-JUN-14 MECHANICAL STATE OF CALIFORNIA

KEY PLAN

ARCHITECT/ENGINEERS:

MEI architecture + interiors
239 9TH STREET, SUITE 201
SAN FRANCISCO, CA 94103
T (415) 682-7376 F (415) 682-7339
www.meiarchitects.com

Drawing Title: **TYPICAL AHU PLAN AND SECTIONS**

Approved: Project Director

Project Title: **CONSOLIDATE / EXPAND MEDICAL PROCEDURES MINOR (CEMP)**

Location: **VANCHCS - MATHER, CA**

Date: **APRIL 22, 2014** | Checked: **PM** | Drawn: **TH**

Project Number: **612-111**

Building Number:

Drawing Number: **M3.01**
Dwg. -- of --

Office of Facilities Management

Department of Veterans Affairs

VA FORM 08-6231, OCT 1978

04/28/2014 2:09:52 PM

FULLY SPRINKLERED

100% CONSTRUCTION DOCUMENTS

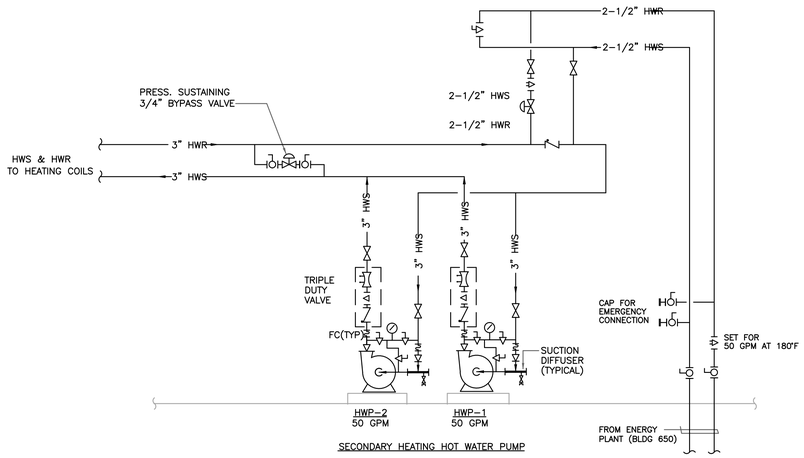

2 - SECONDARY HEATING HOT WATER PIPING DIAGRAM

SCALE: NONE

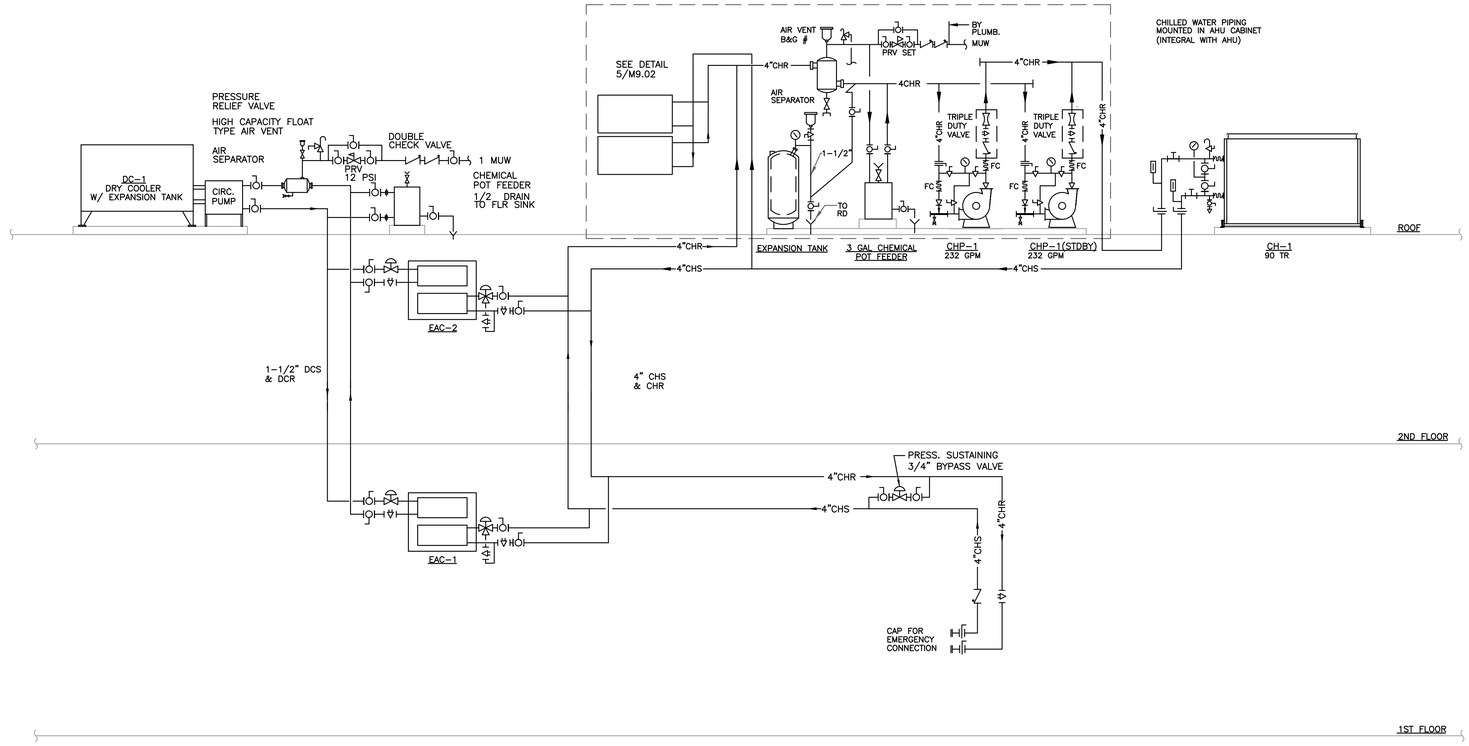

1 - DRY COOLER AND CHILLED WATER PIPING DIAGRAM

SCALE: NONE

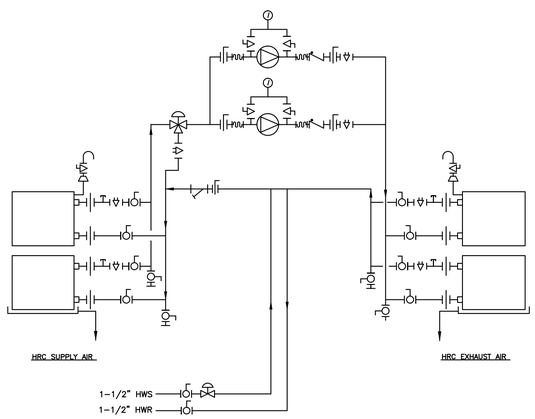

3 - HEAT RECOVERY PIPING DIAGRAM

SCALE: NONE

Issues & Revisions:	Date

CONSULTANTS:

TED JACOB ENGINEERING GROUP
LEADING BY INNOVATION
JOB NO. MEI-001
1763 BROADWAY, OAKLAND, CA 94612-2105
(510) 763-4880 FAX (510) 763-5099

Copyright © 2013 Ted Jacob Engineering Group. All rights reserved. No part of this work may be reproduced, changed, copied or transmitted in any form or by any means, electronic or mechanical, including, but not retrieval system, except as may be expressly permitted in writing from TJEG.

REGISTERED PROFESSIONAL ENGINEER TED JACOB No. M18692 Exp. 12-31-14 MECHANICAL STATE OF CALIFORNIA

KEY PLAN

ARCHITECT/ENGINEERS:

MEI architecture + interiors
239 9TH STREET, SUITE 201
SAN FRANCISCO, CA 94103
T (415) 682-7376 F (415) 682-7339
www.meiarchitects.com

Drawing Title: **HYDRONIC DIAGRAMES**

Approved: Project Director

Project Title: **CONSOLIDATE / EXPAND MEDICAL PROCEDURES MINOR (CEMP)**

Location: **VANCHCS - MATHER, CA**

Date: **APRIL 22, 2014** | Checked: **PM** | Drawn: **TH**

Project Number: **612-111**

Building Number:

Drawing Number: **M4.01**

Dwg. -- of --

Office of Facilities Management

Department of Veterans Affairs

VA FORM 08-6231, OCT 1978

04/28/2014 2:09:10 PM

FULLY SPRINKLERED

100% CONSTRUCTION DOCUMENTS

SEQUENCE OF OPERATION

A. AIR COOLED CHILLER
1. AIR COOLED CHILLER (CH-1) AND ASSOCIATED PUMPS (CHP-1 & -2) SHALL START AND STOP BY THE DIGITAL CONTROL PANEL (DCP).
2. ASSOCIATED PUMPS (CHP-1 & -2) SHALL BE PROVIDED WITH AUTOMATIC AND MANUAL LEAD/LAG CHANGE OVER CAPABILITY. WHEN LEAD PUMP FAIL TO OPERATE WHEN COMMANDED, LAG PUMP SHALL INITIATE TO START.
3. CH-1 SHALL START WHEN OUTSIDE AIR TEMPERATURE IS ABOVE 53°F (ADJUSTABLE), AND SHALL STOP WHEN OUTSIDE AIR IS 53°F (ADJUSTABLE).
4. UPON COMMAND START, LEAD PUMP (CHP-1) SHALL START. WHEN FLOW IS ESTABLISH BY THE FLOW SWITCH OR INTERNAL DEVICE BY THE CHILLER, CHILLER CAN START. CHILLER SHALL OPERATE AND RUN UNDER ITS SPECIFIED CONTROL TO MAINTAIN A SET CHILLED WATER TEMPERATURE OF 44°F (ADJUSTABLE).
5. VARIABLE FREQUENCY DRIVE OF THE CHP SHALL MODULATE TO MAINTAIN DIFFRENTIAL PRESSURE SET BYT THE DPS.
6. THERE WILL BE NO CONDITION THAT CH-1 AND DC-1 WILL OPERATE AT THE SAME TIME.

B. DRY-COOLER
1. DRY-COOLER (DC-1) AND ASSOCIATED PUMPS (CHP-1 & -2) SHALL START AND STOP BY THE DIGITAL CONTROL PANEL (DCP).
2. ASSOCIATED PUMPS (CHP-1 & -2) SHALL BE PROVIDED WITH AUTOMATIC AND MANUAL LEAD/LAG CHANGE OVER CAPABILITY. WHEN LEAD PUMP FAIL TO OPERATE WHEN COMMANDED, LAG PUMP SHALL INITIATE TO START.
6. DRY-COOLER (DC-1) SHALL START AND OPERATE WHEN AIR COOLED CHILLER (CH-1) IS STOP OPERATING AND NO FLOW IS DETECTED BY FLOW METER (FM-1).

C. ENVIRONMENTAL AIR CONDITIONING UNITS (EAC)
1. PROVIDE DIGITAL CONTROL PANEL (DCP) MOUNTED IN THE AREA SERVED BY THE EAC'S.
2. EAC'S START/STOP SHALL BE BY THE ROOM THERMOSTAT THROUGH THE DCP.
3. CRITICAL SELECTED ALARMS SHALL BE PRINTED AT THE CENTRAL ALARM PRINTER.
4. CHILLED WATER (ECONO-COIL) SHALL BE THE PRIMARY SYSTEM TO OPERATE. DRYCOOLER (DC) UNITS SHALL OPERATE WHEN CHILLED WATER IS NOT AVAILABLE. FLOW METER, FM-1 WILL INDICATED CHILLED WATER AVAILABILITY.
5. THERE WILL BE NO CONDITION THAT CHILLED WATER AND DRYCOOLER WILL OPERATE AT THE SAME TIME.
6. WHEN ROOM TEMPERATURE SHALL NOT MAINTAIN, ALARM SHALL BE SENT TO DCP.
7. WHEN TEMPERATURE SENSORS T-1 AND T-2 DOES NOT MAINTAIN SETPONT, ALARM SHALL BE SENT TO THE DCP.

D. CHILLED WATER (ECONO-COIL) STAGING:
1. ROOM THERMOSTAT, T-1 SHALL START THE EAC UNIT, OPEN AND MODULATE THE CHILLED WATER COIL CONTROL VALVE, V-1 THROUGH THE INTERNAL CONTROLS TO MAINTAIN ROOM TEMPERATURE SETPOINT.
2. WHEN CHILLED WATER IS NOT USED CONTROL VALVE, V-1 SHALL CLOSED.

E. DRYCOOLER STAGING:
1. WHEN NO FLOW IS DETECTED BY FM-1, THE DRY COOLER SHALL START. EAC CONTROL VALVE, V-2 SHALL OPEN AND MODULATE THROUGH THE EAC INTERNAL CONTROLS TO MAINTAIN ROOM TEMPERATURE SETPOINT.
2. ANYTIME DRYCOOLER IS OFF, ASSOCIATED CONTROL VALVE, V-2 SHALL CLOSE.
3. SUPPLY AIR DISCHARGE TEMPERATURE SHALL BE MAINTAINED THROUGH THE EAC UNIT INTERNAL CONTROLS.

F. TREND LOG
1. CRITICAL SELECTED ALARMS SUCH AS NO FLOW, TEMPERATURE SETPOINTS AND ETC SHALL BE PRINTED ON THE CRITICAL ALARM PRINTER.
2. PROVIDE TREND LOG OF CHILLED WATER TEMPERATURE SENSORS AT THE CENTRAL LOGGING CENTER.
3. ALL ALARMS SHALL BE PRINTED TO THE TREND LOG PRINTER.

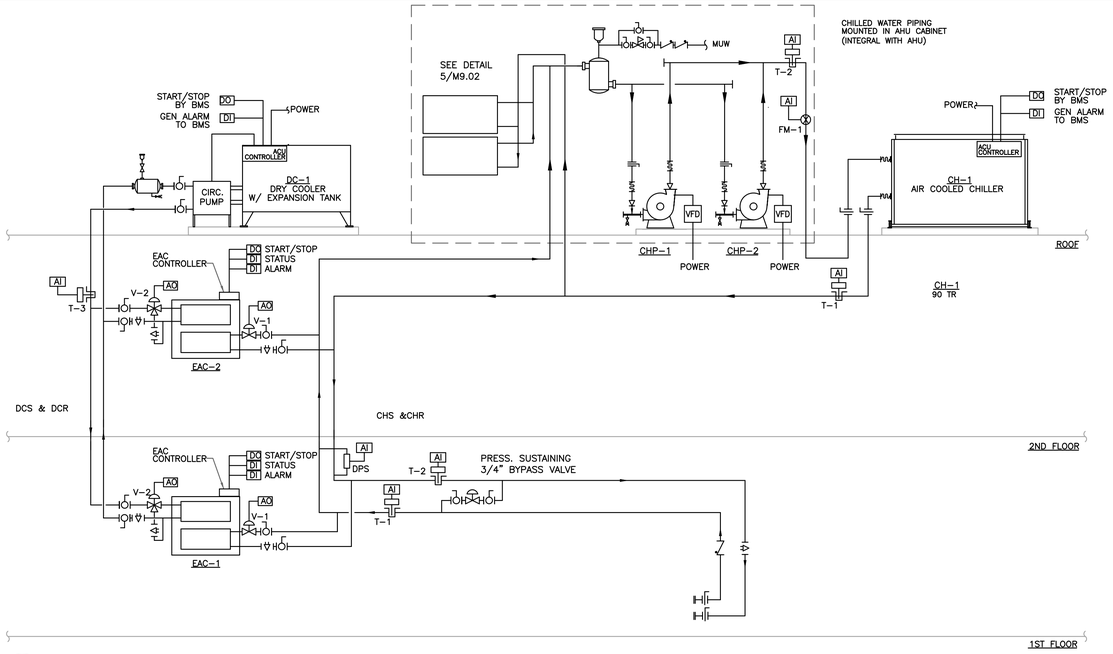

2 CHILLED WATER AND DRYCOOLER CONTROL DIAGRAM
SCALE: NONE

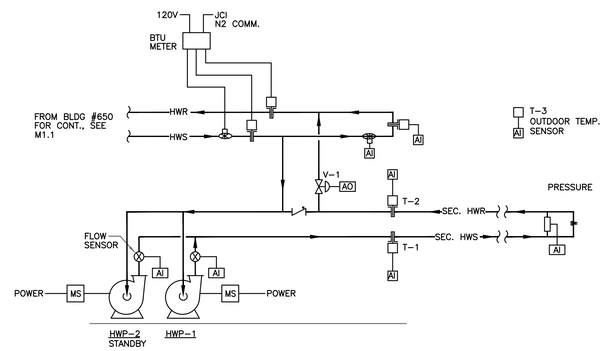

SEQUENCE OF OPERATION

B. SECONDARY HOT WATER PUMPS

B.1 SECONDARY PUMPS SHALL START/STOP BY THE DCP.

B.2 PUMP, SHWP-1 SHALL BE THE LEAD PUMP AND RUN CONTINUOUSLY. WHEN LEAD PUMP CAN NOT MAINTAIN PRESSURE SETPOINT, THE STANBY PUMP SHALL BE ENERGIZED TO START. ALARM SHALL BE SENT TO DCP TO INDICATE THIS CONDITION. PROVIDE LEAD/STANDBY AUTO CHANGE OVER. ALTERNATE LEAD/STANDBY PUMPS TO OPERATE BASED ON RUN TIME.

B.3 PROVIDE SUPPLY AND RETURN TEMPERATURE SENSORS IN THE HOT WATER LOOP, TO MONITOR AND ALARM FOR TEMPERATURE.

B.4 PROVIDE WATER FLOW SENSORS AT THE EACH PUMP DISCHARGE FOR FLOW MONITOR AND ALARM.

B.5 A TWO-WAY CONTROL VALVE V-1, SHALL MODULATE TO MAINTAIN SUPPLY HOT WATER TEMPERATURE, SENSED BY T-1, OUTDOOR AIR TEMPERATURE T-3 TO MAINTAIN 140°F WHEN OUTSIDE TEMPERATURE IS ABOVE 75°F (ADJUSTABLE) AND 180°F WHEN OUTSIDE TEMPERATURE IS BELOW 50°F (ADJUSTABLE) WITH FULL MODULATION BETWEEN THE ABOVE TEMPERATURES. ALSO, THE OUTDOOR AIR TEMPERATURE INPUT OR TIME OF DAY SHALL BE MADE CAPABLE TO TURN BOILERS PUMPS ON OR OFF IF SO DESIRED. TEMPERATURE SENSOR, T-2 SHALL MONITOR RETURN TEMPERATURE.

B.6 SECONDARY PUMPS (SHWP-1 AND SHWP-2) ARE PROVIDED WITH MOTOR START (MS) TO MAINTAIN PRESSURE SET POINT (ADJUSTABLE) BY THE DIFFERENTIAL PRESSURE SENSOR AT END OF RUN. IF LEAD PUMP CAN NOT MAINTAIN PRESSURE SETPOINT, STANDBY PUMP WILL BE ENERGIZED.

C. TREND LOG

C.1 FURNISH A TREND LOG OF HEATING WATER SUPPLY, RETURN TEMPERATURES, FLOW, PRESSURE AND OUTDOOR AIR TEMPERATURE THAT PRINTS OUT THE CENTRAL LOGGING AT OWNER SPECIFIED TIMES EVERY 24 HOURS. PROVIDE A WEEKLY REPORT OF THE TOTAL RUN TIME OF EACH PUMPS AND BOILERS.

C.2 CRITICAL OWNER SELECTED ALARMS SUCH AS NO FLOW AND HIGH AND LOW HOT WATER TEMPERATURE SHALL BE PRINTED AT THE CENTRAL ALARM PRINTER.

C.3 FLOW SENSOR AT THE DISCHARGE OF THE PUMP WILL PROVIDE FLOW STATUS OF EACH PUMP AND WILL ALSO PROVIDE STATUS OF THE PUMP OPERATION.

3 SECONDARY HOT WATER SYSTEM CONTROL DIAGRAM
SCALE: NONE

GENERAL NOTES:

1. THE CAMPUS CONTROL SYSTEM (DDC) IS BACnet METASYS, THE NEW CONTROL SYSTEM SHALL MATCH EXISTING SYSTEM. "NO SUBSTITUTION ALLOWED".
2. ALL METERING DEVICES SHOWN SHALL BE INTERFACED WITH THE ADVANCE UTILITY METERING SYSTEM, REFER TO SECTION 251010.

SHEET NOTES:

1. EMERGENCY ELECTRICAL POWER PROVIDED BY DIVISION 16.
2. NOT USED
3. ZONE (AHU) CONTROLLER TO BE MOUNTED INSIDE AIR HANDLING UNIT
4. 24 VOLT POWER FOR TERMINAL UNIT CONTROLLER FROM CONTROL POWER TRANSFORMER PANEL, SEE DRAWING 7/M5.02
5. CONTROL WIRING TO AHU SHALL BE IN CONDUIT AND PENETRATE THE ROOF WITHIN THE ROOF CURB. CONDUIT AND WIRING SHALL NOT BE RUN ON THE ROOF.
6. ZONE (FCU) CONTROLLER TO BE MOUNTED ON SIDE OF FCU CASING.

CONTROL LEGEND

AFM	AIR FLOW MEASURING DEVICE
AI	ANALOG INPUT
AO	ANALOG OUTPUT
D	DAMPER
DCP	DIGITAL CONTROL PANEL
DCM	DIGITAL CONTROL MODULE
DDC	DIRECT DIGITAL CONTROL
DI	DIGITAL INPUT
DO	DIGITAL OUTPUT
DSD	DUCT SMOKE DETECTOR
FA	FIRE ALARM
FS	FLOW SWITCH
FPS	FREEZE PROTECTION SWITCH
H-O-A	HAND-OFF-AUTO
I/D	CURRENT TO DIGITAL
M	MAIN AIR/MOTOR
MS	MOTOR STARTER
POT	PORTABLE TERMINAL
SPS	STATIC PRESSURE SENSOR
T	TEMPERATURE SENSOR
V	CONTROL VALVE
VFD	VARIABLE FREQUENCY DRIVE
ZC	ZONE CONTROLLER
	FLOW SENSOR

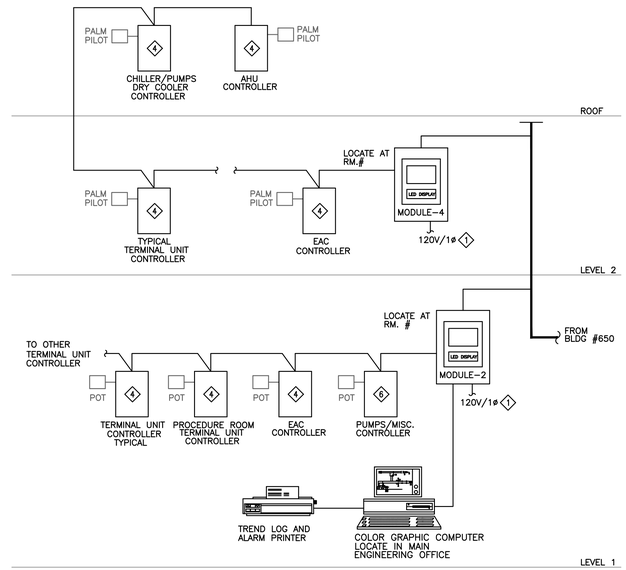

1 CONTROL SYSTEM ARCHITECTURE
SCALE: NONE

Issues & Revisions:	Date

CONSULTANTS:

TED JACOB ENGINEERING GROUP
LEADING BY INNOVATION
JOB NO. MEI-001
1763 BROADWAY, OAKLAND, CA 94612-2105
(510) 763-4880 FAX (510) 763-5099

Copyright © 2013 Ted Jacob Engineering Group. All rights reserved. No part of this work may be reproduced, changed, copied or transmitted in any form or by any means, electronic or mechanical, including, but not retrieval system, except as may be expressly permitted in writing from TJEG.

REGISTERED PROFESSIONAL ENGINEER JACOB No. M18692 Exp. 6-30-14 MECHANICAL STATE OF CALIFORNIA

KEY PLAN

ARCHITECT/ENGINEERS:

MEI architecture + interiors
239 9TH STREET, SUITE 201
SAN FRANCISCO, CA 94103
T (415) 682-7376 F (415) 682-7339
www.meiarchitects.com

Drawing Title: **CONTROL DIAGRAMS**

Approved: Project Director

Project Title: **CONSOLIDATE / EXPAND MEDICAL PROCEDURES MINOR (CEMP)**

Location: **VANCHCS - MATHER, CA**

Date: **APRIL 22, 2014** | Checked: **PM** | Drawn: **TH**

Project Number: **612-111**

Building Number:

Drawing Number: **M5.01** Dwg. -- of --

Office of Facilities Management

Department of Veterans Affairs

VA FORM 08-6231, OCT 1978 04/28/2014 2:08:37 PM

FULLY SPRINKLERED **100% CONSTRUCTION DOCUMENTS**

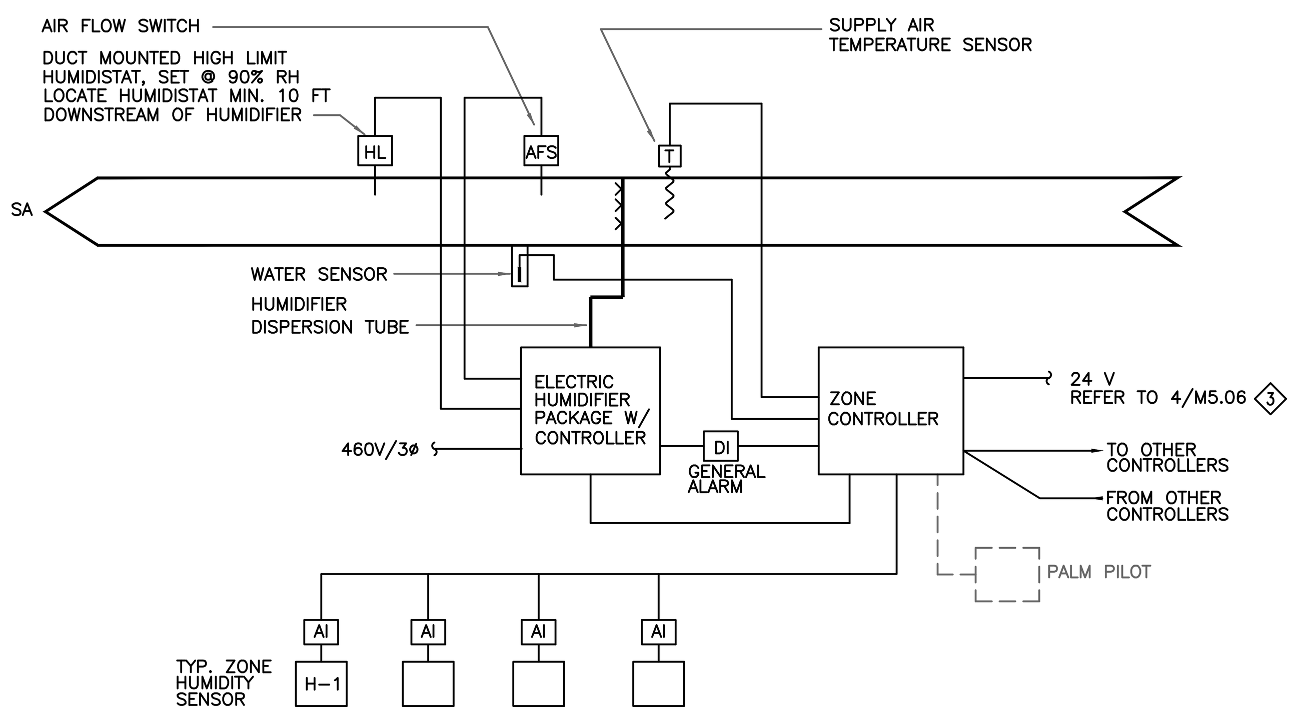

SEQUENCE OF OPERATION:

1.0 GENERAL

1.1 TEMPERATURE AND HUMIDITY CONTROL PANEL SHALL BE ABLE TO MAINTAIN SPACE TEMPERATURE SETPOINT FROM 55°F TO 85°F WITH TEMPERATURE RANGE ADJUSTABLE UP TO 10°F DEAD BAND.

1.2 ALARM SHALL BE SENT TO DCP WHEN HUMIDITY AND TEMPERATURE IS NOT ACHIEVED.

1.3 TEMPERATURE AND HUMIDITY CONTROL PANEL SHALL BE ABLE TO RESET THE SUPPLY AIR TEMPERATURE DISCHARGE (AHU) THROUGH THE DCP TO SATISFY THE ZONE WITH THE MOST COOLING DEMAND.

1.4 WATER SENSOR SHALL SEND AN ALARM SIGNAL TO BMS WHEN MOISTURE IS DETECTED.

2.0 NORMAL MODE CONTROL

2.1 TEMPERATURE SENSOR, T-1, SHALL MODULATE TERMINAL UNIT REHEAT COIL CONTROL VALVE TO MAINTAIN THE REQUIRED TEMPERATURE SETPOINT.

2.2 HUMIDITY SENSOR, H-1, SHALL MODULATE ELECTRIC HUMIDIFIER TO MAINTAIN REQUIRED HUMIDITY SETPOINT. A HIGH LIMIT HUMIDISTAT AND FLOW SWITCH SUPPLIED WITH THE HUMIDIFIER AND INSTALLED BY THE EMS CONTRACTOR SHALL ACT AS SAFETIES, PREVENTING OPERATION OF THE HUMIDIFIER IF THERE IS NO AIR FLOW AND/OR RELATIVE HUMIDITY, THUS PREVENTING EXCESSIVE MOISTURE IN THE DUCT.

2 / - DUCT HUMIDIFIER CONTROL DIAGRAM

TABLE 1 – PROCEDURE ROOM MODE OF OPERATION

PROCEDURE ROOM NUMBER	116	117	118	119	121	122	123	212
OCCUPIED MODE								
SUPPLY CFM	535	535	535	720	615	530	630	540
EXHAUST CFM	700	700	700	940	800	690	820	705
UNOCCUPIED MODE MIN 6AC/HR								
SUPPLY CFM	270	270	270	360	310	265	315	270
EXHAUST CFM	435	435	435	580	495	425	505	435

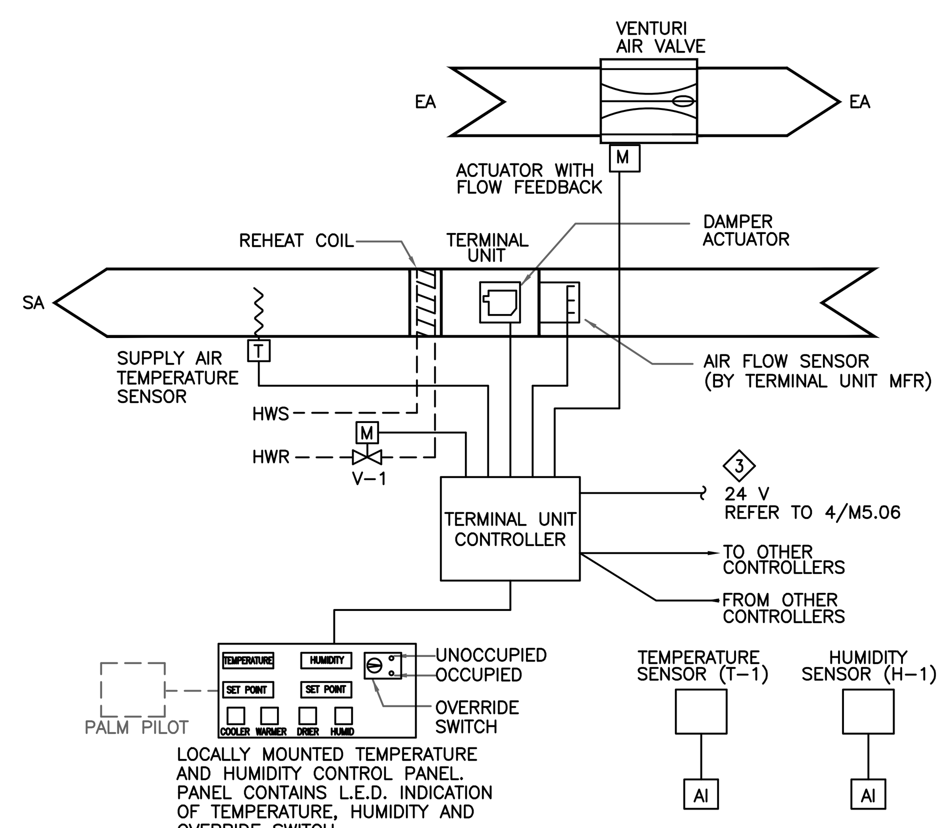

SEQUENCE OF OPERATION:

1.0 GENERAL

1.1 TEMPERATURE AND HUMIDITY CONTROL PANEL SHALL BE ABLE TO MAINTAIN SPACE TEMPERATURE AND HUMIDITY SETPOINT.

1.2 ALARM SHALL BE SENT TO DCP WHEN HUMIDITY AND TEMPERATURE IS NOT ACHIEVED.

1.3 TEMPERATURE AND HUMIDITY CONTROL PANEL SHALL BE ABLE TO RESET THE SUPPLY AIR TEMPERATURE DISCHARGE (AHU) THROUGH THE DCP TO SATISFY THE ZONE WITH THE MOST COOLING DEMAND.

1.4 TEMPERATURE AND HUMIDITY CONTROL PANEL SHALL BE ABLE TO RESET HUMIDITY FROM THE COMMON HUMIDIFIER CONTROLLER. THROUGH THE DCP TO SATISFY THE ZONE HUMIDITY REQUIREMENT.

2.0 NORMAL MODE CONTROL

2.1 TEMPERATURE SENSOR, T-1, SHALL MODULATE TERMINAL UNIT REHEAT COIL CONTROL VALVE TO MAINTAIN THE REQUIRED TEMPERATURE SETPOINT.

2.2 HUMIDITY SENSOR, H-1, (HUMIDISTATS AS INDICATED ON PLAN) SHALL MODULATE OPERATION OF THE HUMIDIFIER/CONTROLLER TO SATISFY THE ROOM/ZONE WITH THE HIGHEST HUMIDIFICATION DEMAND BY THE LOWEST SUPPLY AIR MOISTURE CONTENT POSSIBLE. REFER TO DETAIL 5/M5.07.

2.3 A LOCALLY MOUNTED TEMPERATURE AND HUMIDITY CONTROL PANEL SHALL PROVIDE LOCAL DISPLAY AND USER OVERRIDE OF TEMPERATURE, HUMIDITY AND OCCUPIED/UNOCCUPIED. THE PANEL SHALL BE FLUSH MOUNTED, GASKETED AND CONSTRUCTED OF STAINLESS STEEL. THE PANEL SHALL USE 4 SEPARATE LED DISPLAYS TO DISPLAY ROOM TEMPERATURE, ROOM TEMPERATURE SET POINT, ROOM HUMIDITY AND ROOM HUMIDITY SET POINT. EACH LED DISPLAY SHALL BE LABELED AS TO ITS FUNCTION. FOUR PUSH BUTTONS SHALL BE PROVIDED TO ADJUST ROOM TEMPERATURE AND HUMIDITY SET POINTS. BUTTONS SHALL BE LABELED "COOLER", "WARMER", "DRIER" AND "HUMID".

3.0 MODES OF OPERATION

3.1 UNOCCUPIED: ON A SIGNAL FROM OVERRIDE SWITCH CONSTANT AIR VOLUME TERMINAL UNITS (CAV) AND AND AIR VALVE (AV) SHALL POSITION THE DAMPER TO AIR FLOWS PER TABLE 1.

3.2 OCCUPIED : ON A SIGNAL FROM OVERRIDE SWITCH CONSTANT AIR VOLUME TERMINAL UNITS (CAV) AND AIR VALVE (AV) SHALL POSITION THE DAMPER TO AIR FLOWS PER TABLE 1.

3 / - PROCEDURE ROOM TERMINAL UNIT CONTROL DIAGRAM

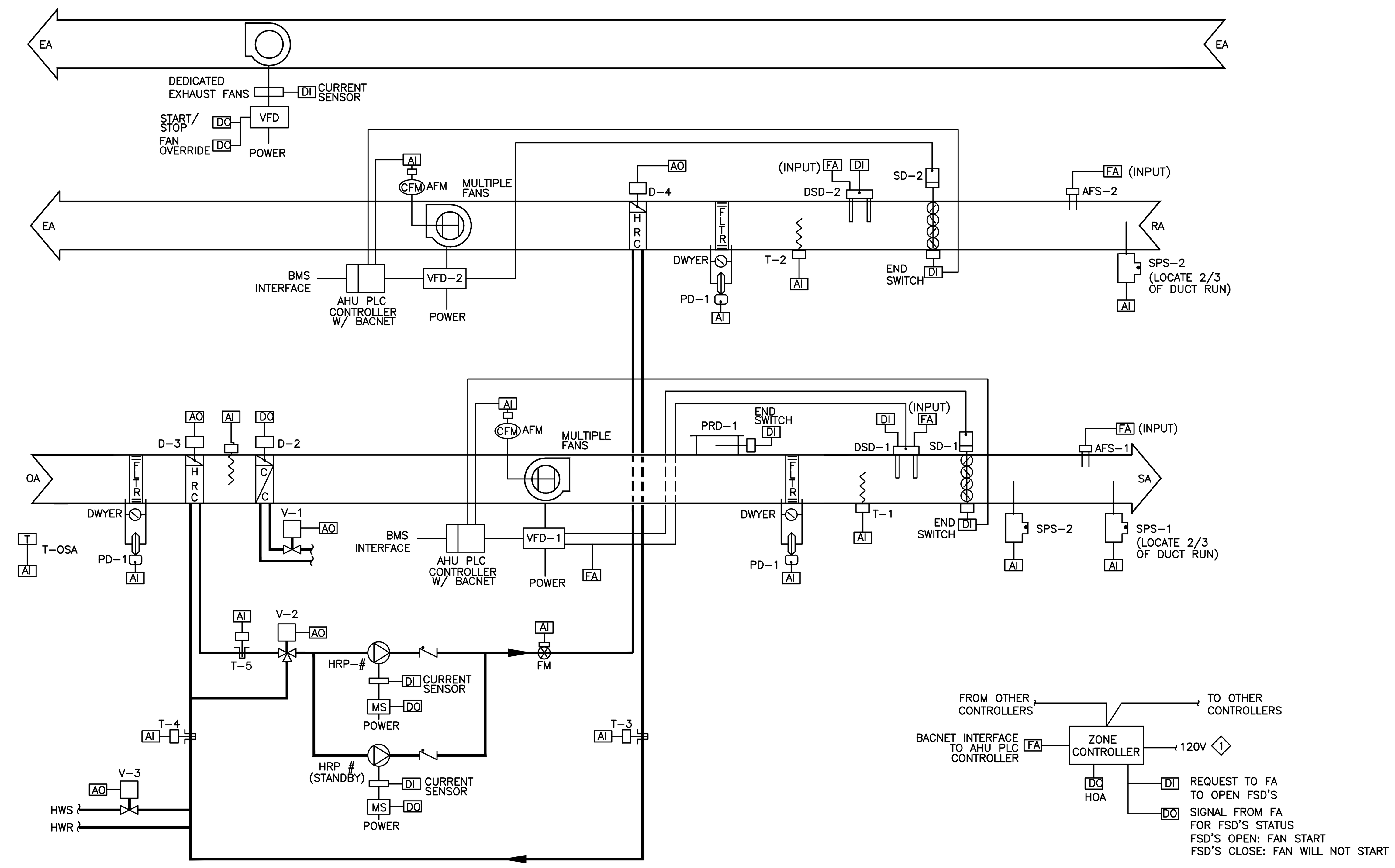

SEQUENCE OF OPERATION FOR 100% SUPPLY AND EXHAUST WITH RUN-AROUND HEAT RECOVERY SYSTEM AND SMOKE CONTROL

1 GENERAL

1.1 FURNISH DIGITAL CONTROL PANELS, (DCP) MOUNTED IN THE SERVICE VESTIBULE OF THE AHU IN A NEMA 3R ENCLOSURE.

1.2 AHU IS AUTOMATICALLY STARTED/STOPPED BY THE START-STOP PROGRAM IN THE DCP AS DESCRIBED BELOW.

1.3 DURING NORMAL OPERATION THE H-O-A SWITCH(S) SHALL BE KEPT IN THE "AUTO POSITION".

1.4 IN THE NORMAL MODE THE AHU SUPPLY AND EXHAUST FANS SHALL RUN CONTINUOUSLY.

1.5 AHU SUPPLY FAN(S) SHALL BE INTERLOCKED TO OPERATE ONLY WHEN THE ASSOCIATED AHU EXHAUST FAN(S) ARE IN OPERATION.

1.6 ANY TIME THE AHU IS TURNED OFF, AHU SMOKE ISOLATION DAMPERS IN THE SUPPLY DISCHARGE DUCT, SD-1 AND EXHAUST INLET DUCT, SD-2 SHALL CLOSE. COOLING AND HEAT RECOVERY COIL VALVES SHALL CLOSE.

1.7 BEFORE AHU FAN START, AHU SMOKE ISOLATION DAMPERS IN THE SUPPLY DISCHARGE DUCT, SD-1 AND EXHAUST INLET DUCT, SD-2 SHALL BE PROVED OPEN. COILS CONTROL VALVES SHALL OPERATE UNDER NORMAL CONDITION.

1.8 IF WATER FLOW (FIRE PROTECTION SYSTEM) IS DETECTED BY THE FA, ALL AIR HANDLING UNITS SHALL REMAIN IN OPERATION.

2 SMOKE DETECTION MODE OPERATION :

2.1 SMOKE AND FIRE ALARM CONTROLS SHALL BE UNDER DIVISION 26. DIVISION 23 SHALL COORDINATE. ANY OPERATING CONDITIONS AS INDICATED BELOW SHALL BE SEND TO BMS AND FACP.

2.2 IF SMOKE IS DETECTED BY THE SUPPLY AIR DUCT SMOKE DETECTOR, DSD-1 IN THE SUPPLY AIR DISCHARGE, THE AHU (SUPPLY AND EXHAUST FANS) SHALL SHUT-OFF. SMOKE ISOLATION DAMPERS SD-1 AND SD-2 SHALL CLOSE.

2.3 IF SMOKE IS DETECTED BY THE DUCT SMOKE DETECTOR, DSD-2 IN THE AHU INLET A SIGNAL SHALL SEND SIGNAL ALARM TO FACP.AHU SHALL SHUT-OFF.

2.4 IF SMOKE IS DETECTED BY THE FIRE ALARM DEVICES, FIRE ALARM SIGNAL SHALL BE SENT TO AHU PANEL TO SHUT DOWN AHU.

2.7 PURGE MODE OPERATION
IN ORDER TO CLEAR SMOKE AFTER SMOKE EVENT FROM THE AREA (SMOKE ZONE) WHERE SMOKE EVENT TOOK PLACE, THE FOLLOWING STEPS SHALL TAKE PLACE:

a. MAINTENANCE (FIREMEN) CONFIRM THAT SMOKE EVENT IS OVER, SMOKE COOLED DOWN;

b. FROM BMS SYSTEM AT FIRE ALARM CONTROL CENTER, SUPPLY AND EXHAUST SYSTEMS SERVING AFFECTED AREA SHALL BE RESTARTED, ALL FIRE SMOKE DAMPERS SHALL OPEN, OVERRIDING FIRE ALARM SYSTEM. THE SYSTEMS SHALL OPERATE AS DESCRIBED UNDER PARAGRAPH 3 BELOW.

3 SUPPLY AIR TEMPERATURE CONTROLS – NORMAL OPERATION

3.1 AVERAGING TEMPERATURE SENSOR T-1 SHALL MODULATE THE SUPPLY AIR RUN AROUND HEAT RECOVERY COIL VALVE V-2, AND COOLING COIL VALVE V-1 IN SEQUENCE, THROUGH THE DCP TO MAINTAIN THE SUPPLY AIR TEMPERATURE SET POINT (51°F TO 65°F) AS DESCRIBED BELOW.

3.2 WHEN THE TEMPERATURE OF THE OUTSIDE AIR SENSED BY T-OSA IS 5F ABOVE THE EXHAUST AIR TEMPERATURE SENSED BY T-3, THE DCP SHALL OPEN THE RUN-AROUND HEAT RECOVERY COIL VALVE V-2 AND SEND A SIGNAL TO TURN ON THE RUN-AROUND HEAT RECOVERY PUMP. THE DCP SHALL ALSO MODULATE COOLING COIL VALVE V-1 TO MAINTAIN THE SUPPLY AIR TEMPERATURE SET POINT, SENSED BY T-1.

3.3 WHEN THE TEMPERATURE OF THE OUTSIDE AIR SENSED BY T-OSA IS LESS THAN 5°F ABOVE THE EXHAUST AIR TEMPERATURE SENSED BY T-3 AND ABOVE THE SUPPLY AIR TEMPERATURE SET POINT SENSED BY T-1, THE DCP SHALL CLOSE THE RUN-AROUND HEAT RECOVERY COIL VALVE V-2 AND SEND A SIGNAL TO TURN OFF THE RUN-AROUND HEAT RECOVERY PUMP. THE DCP SHALL ALSO MODULATE COOLING COIL VALVE V-1 TO MAINTAIN THE SUPPLY AIR TEMPERATURE SET POINT, SENSED BY T-1.

3.4 WHEN THE TEMPERATURE OF THE OUTSIDE AIR SENSED BY T-OSA IS BELOW THE SUPPLY AIR TEMPERATURE SET POINT SENSED BY T-1, THE DCP SHALL MODULATE THE RUN-AROUND HEAT RECOVERY COIL VALVE V-2 TO MAINTAIN THE SUPPLY AIR TEMPERATURE SET POINT, SENSED BY T-1 AND SEND A SIGNAL TO TURN ON THE RUN-AROUND HEAT RECOVERY PUMP. COOLING COIL VALVE V-1 SHALL BE CLOSED.

3.5 SPACE TEMPERATURE SENSORS (ZONE THERMOSTATS AS INDICATED ON THE PLANS) SHALL RESET THE SUPPLY AIR TEMPERATURE THROUGH THE DCP TO SATISFY THE ZONE WITH THE MOST COOLING DEMAND BY THE HIGHEST SUPPLY AIR TEMPERATURE POSSIBLE.

3.6 COOLING COIL BY-PASS DAMPER D-2 SHALL OPEN WHEN COOLING COIL VALVE V-1 IS CLOSED.

3.7 SUPPLY AIR RUN-AROUND HEAT RECOVERY COIL BY-PASS DAMPER D-3 SHALL OPEN WHEN RUN-AROUND HEAT RECOVERY COIL VALVE V-2 IS CLOSE AND HEAT RECOVERY PUMP IS TURN OFF.

3.8 EXHAUST AIR RUN-AROUND HEAT RECOVERY COIL BY-PASS DAMPER D-4 SHALL OPEN WHEN RUN-AROUND HEAT RECOVERY COIL VALVE V-2 IS CLOSE AND HEAT RECOVERY PUMP IS TURN OFF.

3.10 FREEZE PROTECTION TEMPERATURE SENSOR FPS-1 ACROSS THE FACE OF THE COOLING COIL SHALL ALARM AT THE DCP IF ANY SECTION OF COIL SENSES DISCHARGE AIR TEMPERATURE BELOW 40F (ADJUSTABLE). BELOW 36F (ADJUSTABLE) DISCHARGE AIR TEMPERATURE THE DCP SHALL SHUT OFF THE SUPPLY AND GENERAL EXHAUST FANS, CLOSE THE OUTSIDE AIR DAMPER AND ALARM AT THE DCP. DEDICATED EXHAUST FANS SHALL CONTINUE TO OPERATE. PROVIDE OVERRIDE SWITCH TO OVERRIDE FREEZE PROTECTION DURING SMOKE PURGE

4 AIR FLOW AND STATIC PRESSURE CONTROL – NORMAL OPERATION

4.1 AHU CONTROLLER (PLC) RECIEVE SIGNAL FROM THE STATIC PRESSURE SENSOR, SPS-1 THROUGH BMS INTERFACE SHALL MODULATE VFD FAN SPEED TO COMPENSATE FOR FILTER DUST LOADING, WET/DRY COOLING COIL PRESSURE DROP AND MAINTAIN DUCT STATIC PRESSURE SETPOINT. DUCT STATIC PRESSURE SET POINT AT 1.0 (ADJUSTABLE) AND SHALL BE ADJUSTABLE FROM THE DCP.

4.2 AIR FLOW MONITORING STATIONS AFM-1 AND AFM-2, PROVIDED BY THE AHU SHALL USE TO RESET EXHAUST FANS SPEED TO MAINTAIN A CONSTANT AIR DIFFERENCE BETWEEN THE SUPPLY FAN ARRAY AND THE EXHAUST FAN ARRAY

4.3 THE AHU PLC CONTROLLER SHALL MONITOR FAN STATUS. BMS RECIEVE STATUS THROUGH BACNET INTERFACE.

4.4 ANALOG FILTER PRESSURE DROP SENSOR SHALL ALARM AT THE DCP AT FILTER PRESSURE DROP SET POINT (ADJUSTABLE).

4.5 PROVIDE END SWITCH TO ALARM AT THE DCP THAT PRESSURE RELIEF DOOR PRD-1 AT THE SUPPLY DUCT IS OPEN. THE PRD-1 SHALL OPEN TO RELIEVE THE SUPPLY AIR PRESSURE AT 3 INCHES (ADJUSTABLE).

4.6 AIR FLOW SWITCHES (AFS-1,& -2), FURNISH AND INSTALLED BY BMS SHALL CLOSE ASSOCIATED FIRE/SMOKE DAMPERS THROUGH FACP WHEN NO AIR FLOW IS DETECTED (WIRING AND CONTROL IS UNDER DIV.16)

5 HEAT RECOVERY BACK-UP

5.1 TEMPERATURE SENSOR (T-4) IN THE MAIN HEAT RECOVERY PIPING SHALL OPEN CONTROL VALVE (V-3) WHEN WATER TEMPERATURE DROP BELOW 60°F (ADJUSTABLE). REFER TO DRAWING M4.5 FOR LOCATIONS

6 AHU CONTROLLER (PLC) INTERFACE.

6.1 BMS SHALL MONITOR, REPORT AND ALARM SUCH AS FAN STATUS, AIRFLOW, VFD STATUS THROUGH BACNET INTERFACE WITH AHU CONTROLLER (PLC).

7 OPTIMUM START PROGRAM:

7.1 PRE-OCCUPANCY PURGE
ONE HOUR PRIOR TO OCCUPANCY TIME, THE AHU SHALL START TO PROVIDE MINIMUM REQUIRED OCCUPANCY TIME VENTILATION RATE. LOCAL CONTROLLER ADAPTIVE OPERATION THE LOCAL CONTROLLER PROGRAM WILL MONITOR ITS HEATING AND COOLING PERFORMANCE FOR EACH CYCLE OF OPERATION. USING DATA OBTAINED DURING START UP, THE LOCAL CONTROLLER ADAPTATION PROGRAM WILL MODIFY THE LOCAL CONTROLLER OPERATING TABLES TO CORRECT FOR ANY ERRORS THAT MAY OCCUR, AND ADAPT THE BUILDING'S LOCAL CONTROLLER PROGRAM TO THE BUILDING'S MASS AND THERMAL CHARACTERISTICS. SEPARATE CALCULATION AND TABLES WILL BE MAINTAINED FOR HEATING AND COOLING.

7.2 MORNING OPTIMUM START – HEATING MODE
WHEN THE OUTSIDE AIR TEMPERATURE IS LESS THAN 60°F (ADJUSTABLE) AND THE SPACE TEMPERATURE IS BELOW 65°F (ADJUSTABLE), THE DCP SHALL CONTROL IN THE HEATING MODE. BEGINNING AT THE MAXIMUM START TIME, DCP SHALL CALCULATE THE TIME REQUIRED TO BRING THE CONTROLLED SPACE UP TO THE OCCUPIED HEATING SET POINT. AT THE CALCULATED START TIME, THE AHU SHALL START, MORNING WARM-UP WILL BE TURNED ON. THE DCP SHALL TURN THE HEAT RECOVERY SYSTEM ON. THE DCP WILL SEND SIGNAL TO TERMINAL UNITS CONTROLLER TO OPEN ALL THE TERMINAL UNITS OPEN 100% WITH REHEAT COIL VALVE FULL OPEN. AT THE OCCUPANCY TIME, THE SYSTEM WILL BE ALLOWED TO OPERATE AT NORMAL OPERATION AS DESCRIBED ABOVE.

7.3 HEATING AND HEAT RECOVERY SYSTEM WARM-UP
a. HEATING HOT WATER PUMP, HWP-1 SHALL START TO CIRCULATE HOT WATER IN THE BUILDING. TWO WAY CONTROL VALVE SHALL MODULATE TO MAINTAIN DISCHARGE WATER TEMPERATURE SETPOINT.
b. HEAT RECOVERY PUMP HRP-1 SHALL START. CONTROL VALVE, V-3 SHALL OPEN AND MODULATE ENTERING WATER TEMPERATURE TO OUTSIDE AIR HEAT RECOVERY COIL (HRC). WHEN HR WATER LOOP TEMPERATURE SENSED BY T-3 IS REACHED SETPOINT, V-3 SHALL CLOSE.

7.4 PRE-OCCUPANCY COOLING MODE
WHEN THE OUTSIDE AIR TEMPERATURE IS LOWER THAN 75 F (ADJUSTABLE) AND THE SPACE TEMPERATURE IS ABOVE 78 F (ADJUSTABLE), THE LOCAL CONTROLLER PROGRAM WILL CONTROL IN THE COOLING MODE. BEGINNING AT THE MAXIMUM START TIME, LOCAL CONTROLLER WILL CALCULATE THE TIME REQUIRED TO BRING THE CONTROLLED SPACE DOWN TO THE OCCUPIED COOLING SET POINT. AT THE CALCULATED START TIME, PRE-COOLING THE THE SPACE SHALL USE OUTSIDE AIR TEMPERATURE FIRST OPTION AND MECHANICAL COOLING SECOND.

1 / - AHU -1 CONTROL DIAGRAM

SCALE: NONE

Issues & Revisions:	Date

CONSULTANTS:

TED JACOB ENGINEERING GROUP
LEADING BY INNOVATION
JOB NO. MEI-001

1763 BROADWAY, OAKLAND, CA 94612-2105
(510) 763-4880 FAX (510) 763-5099

Copyright © 2013 Ted Jacob Engineering Group. All rights reserved. No part of this work may be reproduced, changed, copied or transmitted in any form or by any means, electronic or mechanical, including, but not retrieval system, except as may be expressly permitted in writing from TJEG.

REGISTERED PROFESSIONAL ENGINEER TED JACOB No. M18692 Exp. 9-30-1_ MECHANICAL STATE OF CALIFORNIA

KEY PLAN

ARCHITECT/ENGINEERS:

MEI architecture + interiors

239 9TH STREET, SUITE 201
SAN FRANCISCO, CA 94103
T (415) 682-7376 F (415) 682-7339
www.meiarchitects.com

Drawing Title: **CONTROL DIAGRAMS**

Approved: Project Director

Project Title: **CONSOLIDATE / EXPAND MEDICAL PROCEDURES MINOR (CEMP)**

Location: **VANCHCS - MATHER, CA**

Date: **APRIL 22, 2014** | Checked: **PM** | Drawn: **TH**

Project Number: **612-111**

Building Number

Drawing Number: **M5.02**
Dwg. -- of --

Office of Facilities Management

Department of Veterans Affairs

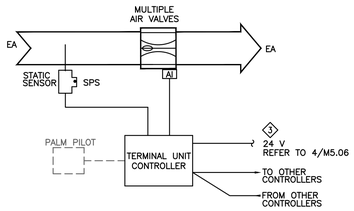

SEQUENCE OF OPERATION

1. MOTORIZED DAMPER AT MAIN EXHAUST AIR DUCT SHALL MODULATE TO MAINTAIN EQUAL CFM BETWEEN MAIN SUPPLY AIR DUCT AND MAIN EXHAUST AIR DUCT THROUGH THE AIR FLOW MEASURING DEVICES.
2. AIR FLOW METER SENSORS SHALL BE WITH COMPRESSED AIR BLOW-OFF TO MAINTAIN LINT FREE SENSOR.

4 - EXHAUST AIR VALVE CONTROL DIAGRAM

SCALE: NONE

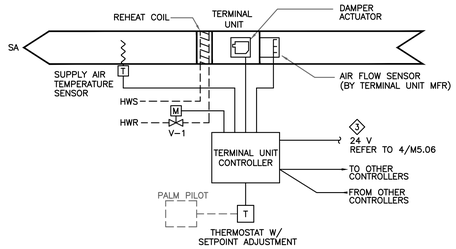

1. GENERAL
   1.1 ROOM THERMOSTAT SHALL BE ABLE TO MAINTAIN SPACE TEMPERATURE SET POINT FROM 55°F WITH TEMPERATURE RANGE ADJUSTABLE UP TO 10°F DEAD BAND.
   1.2. CONTROLLER AND DAMPER ACTUATOR SHALL BE SUPPLIED UNDER DIVISION 15, INSTALLED BY THE CONTROL CONTRACTOR.
   1.3. ROOM THERMOSTAT SHALL BE ABLE TO RESET THE AHU SUPPLY AIR TEMPERATURE DISCHARGE THROUGH THE DCP TO SATISFY THE ZONE WITH THE MOST COOLING DEMAND.
2. NORMAL MODE CONTROL–CONSTANT AIR VOLUME

   TERMINAL UNIT CONTROLLER SHALL MODULATE THE REHEAT COIL CONTROL VALVE TO MAINTAIN ROOM TEMPERATURE SETPOINT AT 72°F (AJUSTABLE) AS SENSED BY THE ROOM TEMPERATURE SENSOR.
3. NORMAL MODE CONTROL – VAV BOXES

   ROOM THERMOSTAT, T-1, THROUGH VAV TERMINAL CONTROLLER SHALL MODULATE THE TERMINAL UNIT ACTUATOR TO MINIMUM AIR FLOW SETPOINT FIRST, THEN THE REHEAT COIL 2-WAY CONTROL VALVE TO MAINTAIN THE REQUIRED ROOM TEMPERATURE SETPOINT.

1 - CONSTANT SUPPLY AIR TERMINAL UNIT WITH REHEAT COIL

SCALE: NONE

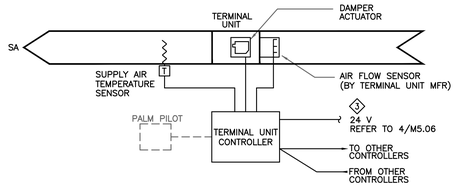

1. GENERAL
   1.1 ROOM THERMOSTAT SHALL BE ABLE TO MAINTAIN SPACE TEMPERATURE SET POINT FROM 55°F WITH TEMPERATURE RANGE ADJUSTABLE UP TO 10°F DEAD BAND.
   1.2. CONTROLLER AND DAMPER ACTUATOR SHALL BE SUPPLIED UNDER DIVISION 15, INSTALLED BY THE CONTROL CONTRACTOR.
   1.3. ROOM THERMOSTAT SHALL BE ABLE TO RESET THE AHU SUPPLY AIR TEMPERATURE DISCHARGE THROUGH THE DCP TO SATISFY THE ZONE WITH THE MOST COOLING DEMAND.
2. NORMAL MODE CONTROL–CONSTANT AIR VOLUME

   TU CONTROLLER SHALL MODULATE THE DAMPER ACTUATOR IN RESPONSE TO DUCT STATIC VARIATION TO MAINTAIN CONSTANT SUPPLY AIR QUANTITY.

2 - CONSTANT SUPPLY AIR TERMINAL UNIT WITHOUT REHEAT COIL

SCALE: NONE

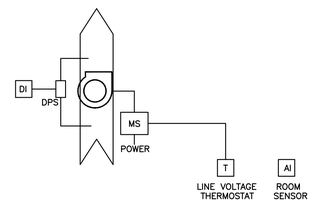

SEQUENCE OF OPERATION

1. GENERAL:
   1.1 EXHAUST FAN SHALL START WHEN PRE-SET TEMPERATURE SETPOINT EXCEED ROOM TEMPERATURE.
   1.2 ROOM TEMPERATURE SENSOR AND DIFFERENTIAL PRESSURE SENSOR SHALL MONITOR FAN STATUS. ALARM SHALL BE SENT TO DCP WHEN FAN IS NOT OPERATING WHEN ROOM TEMPERATURE IS ABOVE SETPOINT.

3 — EXHAUST FANS CONTROL DIAGRAM

SCALE: NONE

Issues & Revisions:	Date

CONSULTANTS:

TED JACOB ENGINEERING GROUP
LEADING BY INNOVATION
JOB NO. MEI-001
1763 BROADWAY, OAKLAND, CA 94612-2105
(510) 763-4880 FAX (510) 763-5099

Copyright @ 2013 Ted Jacob Engineering Group. All rights reserved. No part of this work may be reproduced, changed, copied or transmitted in any form or by any means, electronic or mechanical, including, but not retrieval system, except as may be expressly permitted in writing from TJEG.

REGISTERED PROFESSIONAL ENGINEER TED C. JACOB No. M18692 Exp. 12-31-14 MECHANICAL STATE OF CALIFORNIA

KEY PLAN

ARCHITECT/ENGINEERS:

MEI architecture + interiors
239 9TH STREET, SUITE 201
SAN FRANCISCO, CA 94103
T (415) 682-7376 F (415) 682-7339
www.meiarchitects.com

Drawing Title: **CONTROL DIAGRAMS**

Approved: Project Director

Project Title: **CONSOLIDATE / EXPAND MEDICAL PROCEDURES MINOR (CEMP)**

Location: **VANCHCS - MATHER, CA**

Date: **APRIL 22, 2014** | Checked: **PM** | Drawn: **TH**

Project Number: **612-111**

Building Number:

Drawing Number: **M5.03** Dwg. -- of --

Office of Facilities Management

Department of Veterans Affairs

VA FORM 08-6231, OCT 1978 04/28/2014 2:07:31 PM

FULLY SPRINKLERED **100% CONSTRUCTION DOCUMENTS**

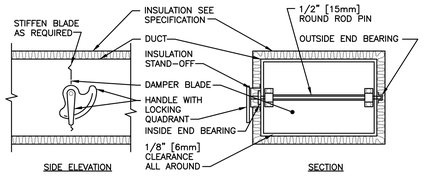

NOTE:

1. DELETE INSULATION STAND-OFF ON DUCTWORK WITHOUT EXTERIOR INSULATION.
2. DETAIL SHOWS SINGLE BLADE DAMPER. DAMPER INSTALLATION SHALL BE SIMILAR FOR MULTI-BLADE DAMPERS & ROUND DAMPERS.

3 VOLUME DAMPER DETAIL

SCALE: NONE

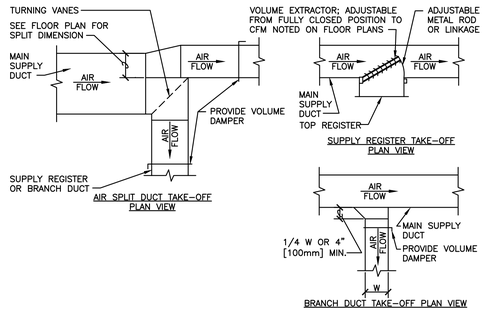

7 SUPPLY DUCTWORK TAKE-OFFS

SCALE: NONE

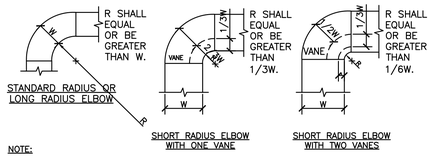

NOTE:

1. THE INTERIOR SURFACE OF ALL RADIUS ELBOWS SHALL BE MADE ROUND.
2. ALL STANDARD RADIUS ELBOWS CAN BE SUBSTITUTED WITH SHORT RADIUS ELBOWS. ALL SHORT RADIUS ELBOWS SHALL HAVE VANES. VANES SHALL BE CONSTRUCTED, SUPPORTED AND FASTENED AS RECOMMENDED BY SMACNA.

8 DUCTWORK RADIUS ELBOWS

SCALE: NONE

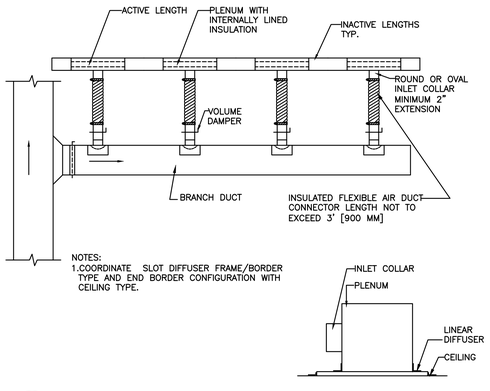

NOTES:
1.COORDINATE SLOT DIFFUSER FRAME/BORDER TYPE AND END BORDER CONFIGURATION WITH CEILING TYPE.

9 LINEAR SLOT DIFFUSER

SCALE: NONE

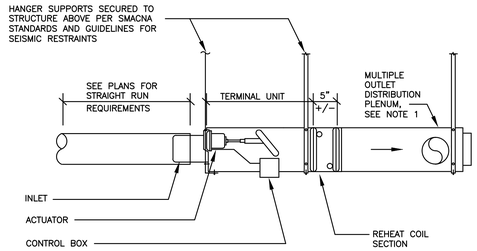

NOTES:

1. EXTERNALLY INSULATE DISTRIBUTION PLENUM.
2. FOR TERMINAL UNITS WEIGHING 50 LBS OR LESS, NO SEISMIC BRACING IS REQUIRED.
3. FOR TERMINAL UNITS EXCEEDING 50 LBS SEE DETAIL M9.0_/___ FOR ADDITIONAL SEISMIC BRACING.

SIZE	WEIGHT (NO COIL)	WEIGHT (W/ COIL – 2 ROW)
UP TO 14"	28 LBS.	47 LBS.
16"	33 LBS.	55 LBS.
24"x16"	62 LBS.	92 LBS.

4 TERMINAL UNIT WITH MULTIPLE OUTLETS AND REHEAT COIL DETAIL

SCALE: NONE

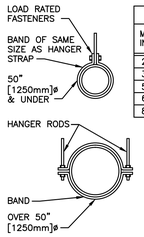

HANGER STRAPS OR RODS

MAX. DUCT ø IN. [mm]	QUANTITY/SIZE IN. [mm]	MAX. LOAD LBS. [kg]	MAX. SPACING IN. [mm]
26 [650]	ONE 1 [25] x 22 GA STRAP	260 [119]	144 [3600]
36 [900]	ONE 1 [25] x 18 GA STRAP	420 [190]	144 [3600]
50 [1250]	ONE 1 [25] x 16 GA STRAP	700 [317]	144 [3600]
60 [1500]	TWO 3/8 [10]ø RODS	1320 [598]	144 [3600]
84 [2100]	TWO 1/2 [13]ø RODS	2500 [1133]	144 [3600]

NOTE:
TABULATED DATA FROM SMACNA ALLOWS FOR DUCT REINFORCING AND INSULATION, BUT NO EXTERNAL LOAD.

5 ROUND DUCT HANGERS

SCALE: NONE

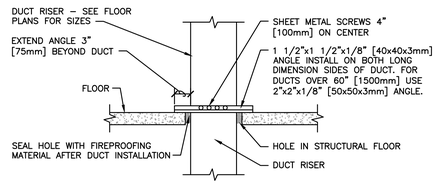

0.5 INCH WG [125Pa] TO 2 INCHES WG [500Pa] DUCT RISER SUPPORT

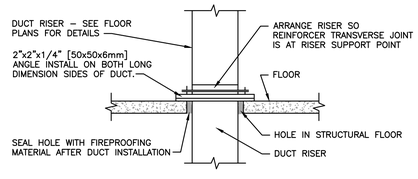

2 INCHES WG [500Pa] TO 4 INCHES WG [1000Pa] DUCT RISER SUPPORT

NOTE:
ALL DUCT WORK RISERS WHICH ARE RUN EXPOSED, SUCH AS THRU ATTIC FLOORS AND FAN ROOM FLOORS SHALL BE PROVIDED WITH A 3" [75mm] HIGH CONCRETE CURB AROUND OPENING FOR DUCT.

6 DUCT RISER SUPPORTS

SCALE: NONE

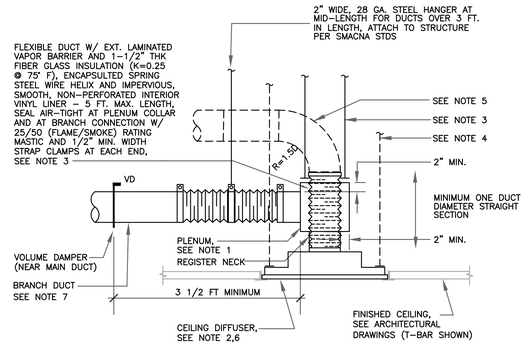

NOTES:

1. EXTERNALLY INSULATE SUPPLY AIR DIFFUSER PLENUMS.
2. TIE DIFFUSERS AND/OR GRILLES TO CEILING GRID WITH #20 GAUGE WIRE AT OPPOSITE SIDES. TERMINATE EACH WIRE AT EACH END WITH 3 TWISTS MINIMUM.
3. FOUR #12 GAUGE TAUT WIRES SUSPENDED FROM ABOVE PER SMACNA STANDARDS AND GUIDELINES FOR SEISMIC RESTRAINT.
4. PROVIDE SUPPORT WIRES ATTACH TO DIFFUSER/GRILLE PER NOTE 3 FOR OPTIONAL FLEXIBLE DUCT CONNECTION TO AIR OUTLETS.
5. OPTIONAL DUCT CONNECTION TO DIFFUSER/GRILLE WHERE SUFFICIENT CEILING SPACE IS AVAILABLE FOR INSTALLATION PER DETAIL. 90° ELBOW SHALL BE HARD DUCT.
6. CEILING RETURN/EXHAUST GRILLE INSTALLATION THE SAME.
7. PROVIDE HARD DUCT CONNECTION WITH PLENUM FOR SHOWER EXHAUST.

2 CEILING DIFFUSER AND GRILLE DETAIL

SCALE: NONE

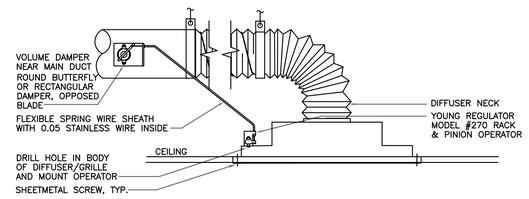

REMOTE VOLUME DAMPER FOR CEILING DIFFUSER/GRILLE FOR DAMPERS LOCATED WITHIN 5' OF DIFFUSERS

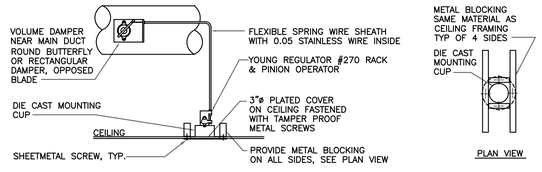

REMOTE VOLUME DAMPER FOR DUCT MOUNTED MANUAL VOLUME DAMPERS BEYOND 5' FROM DIFFUSERS

NOTE: ALL VOLUME DAMPERS ABOVE HARD CEILING SHALL BE PROVIDED WITH REMOTE DAMPER OPERATORS. COORDINATE LOCATION WITH ARCHITECT, CONTRACTOR SHALL SHOW DAMPER OPERATOR LOCATIONS ON SHOP DRAWINGS AND SUBMITTED TO ARCHITECT FOR APPROVAL.

3 REMOTE VOLUME DAMPER DETAIL

SCALE: NONE

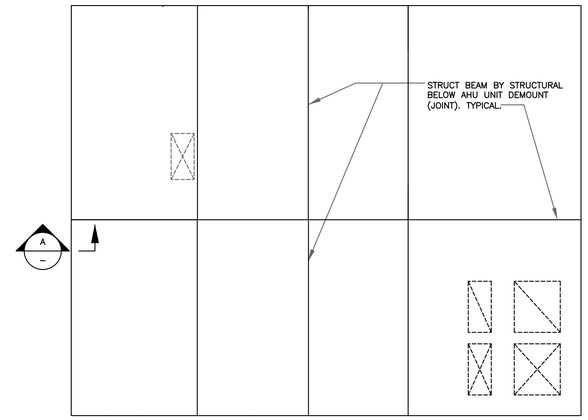

NOTE:

1. FOR AHU-1 DIMENSION, SEE 1/M3.01.

UNIT FLAMING PLAN

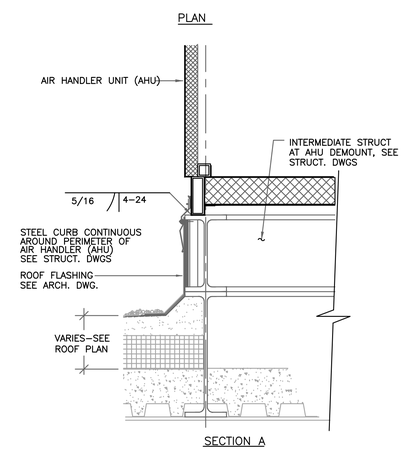

GENERAL NOTES:

1. SEE STRUCTURAL DRAWING FOR DETAIL.

1 AHU-1 ANCHORAGE DETAIL

SCALE: NONE

Issues & Revisions: | Date

CONSULTANTS:

TED JACOB ENGINEERING GROUP
LEADING BY INNOVATION
JOB NO. MEI-001
1763 BROADWAY, OAKLAND, CA 94612-2105
(510) 763-4880 FAX (510) 763-5099

Copyright © 2013 Ted Jacob Engineering Group. All rights reserved. No part of this work may be reproduced, changed, copied or transmitted in any form or by any means, electronic or mechanical, including, but not retrieval system, except as may be expressly permitted in writing from TJEG.

REGISTERED PROFESSIONAL ENGINEER TED JACOB No. M18692 Exp. 12-31-14 MECHANICAL STATE OF CALIFORNIA

KEY PLAN

ARCHITECT/ENGINEERS:

MEI architecture + interiors
239 9TH STREET, SUITE 201
SAN FRANCISCO, CA 94103
T (415) 682-7376 F (415) 682-7339
www.meiarchitects.com

Drawing Title: **DETAILS**

Approved: Project Director

Project Title: **CONSOLIDATE / EXPAND MEDICAL PROCEDURES MINOR (CEMP)**

Location: **VANCHCS - MATHER, CA**

Date: APRIL 22, 2014 | Checked: PM | Drawn: TH

Project Number: 612-111

Building Number:

Drawing Number: **M9.01** Dwg. -- of --

Office of Facilities Management

Department of Veterans Affairs

VA FORM 08-6231, OCT 1978 04/28/2014 2:07:01 PM

FULLY SPRINKLERED **100% CONSTRUCTION DOCUMENTS**

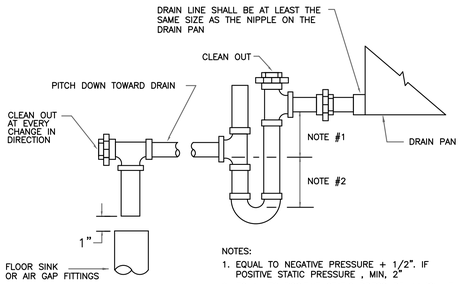

NOTES:
1. EQUAL TO NEGATIVE PRESSURE + 1/2". IF POSITIVE STATIC PRESSURE , MIN, 2"
2. EQUAL TO POSITIVE STATIC PRESSURE +1/2". IF NEGATIVE STATIC PRESSURE , MIN, 2"

9 - AIR HANDLING UNIT DRAIN TRAP
SCALE: NONE
FAN COIL UNITS SIMILAR

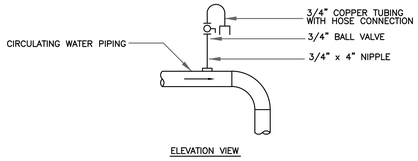

NOTES:
1. VENT ALL HIGH POINTS AS INDICATED ABOVE
2. AUTOMATIC AIR VENTS NOT USED UNLESS CALL OUT ON DRAWINGS

7 - TYPICAL MANUAL AIR VENT
SCALE: NONE

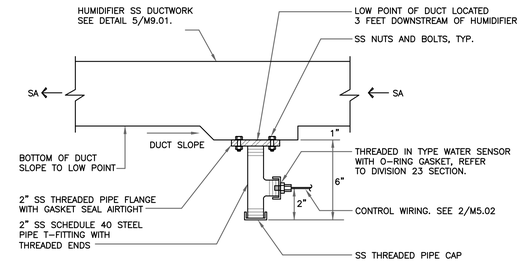

4 - TYP. HUMIDIFIER WATER SENSOR DETAIL
SCALE: NONE

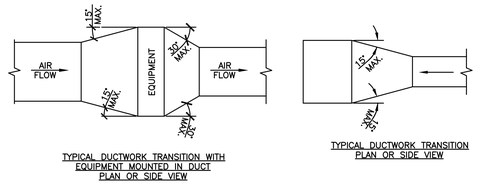

NOTE:
UNLESS OTHERWISE INDICATED ON PLANS, MAXIMUM ANGLES SHOWN SHALL APPLY.

1 - DUCTWORK TRANSITIONS (WITH EQUIPMENT MOUNTED IN DUCT)
SCALE: NONE

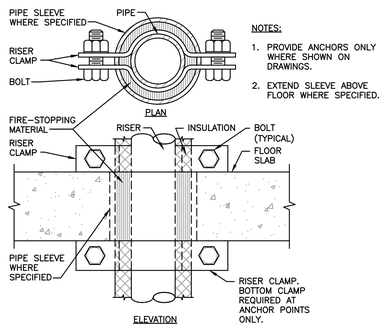

NOTES:
1. PROVIDE ANCHORS ONLY WHERE SHOWN ON DRAWINGS.
2. EXTEND SLEEVE ABOVE FLOOR WHERE SPECIFIED.

10 - SUPPORT/ANCHOR FOR PIPE RISERS
SCALE: NONE

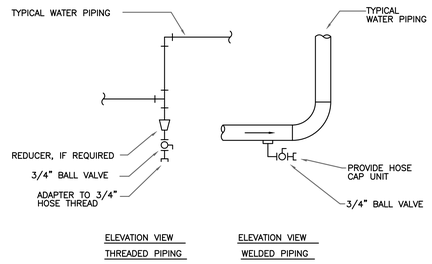

NOTES:
1. VENT ALL HIGH POINTS AS SHOWN ON DETAIL 3/M9.1

8 - TYPICAL DRAIN VALVE CONNECTION
SCALE: NONE

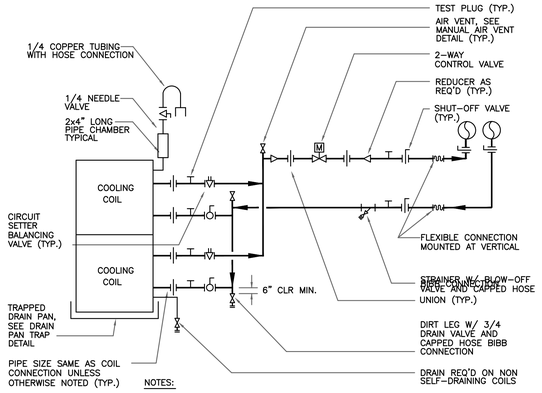

NOTES:
1. COIL VALVING AND TEST PLUGS SHALL BE IN AN ACCESSIBLE LOCATION. ALL PIPING, VALVES AND TRIMS SHALL BE HOUSED WITHIN THE PIPING VESTIBULE PROVIDED BY THE AIR HANDLING UNIT MANUFACTURER. COORDINATE PIPING LAYOUT AND SIZE OF VESTIBULE WITH AHU MFR.
2. ARRANGE PIPING AND LOCATE UNIONS TO FACILITATE COIL AND CONTROL VALVE REMOVAL.
3. MANUAL AIR VENT SHALL BE REQUIRED WHERE COIL PIPING IS A TOP CONNECTION TO MAIN LOOP.

5 - AHU COOLING COIL PIPING CONNECTION DETAIL
SCALE: NONE

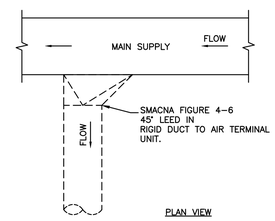

2 - ALTERNATE SUPPLY DUCT TAKEOFF - AIR TERMINAL UNITS
SCALE: NONE

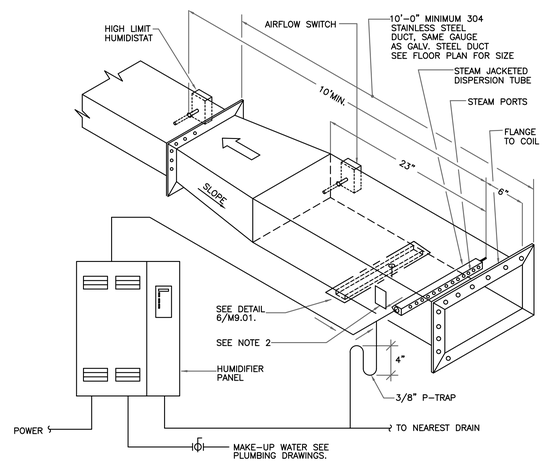

NOTES:
1. FOR CLEAN STEAM SYSTEM, ALL PIPING, VALVES AND TRIMS SHALL BE 316 SS CONSTRUCTION, SEE SPECIFICATION.
2. PROVIDE MIN. 18" WIDE ACCESS DOOR

3 - DUCT MOUNTED STEAM HUMIDIFIER DETAIL
SCALE: NONE

NOTE:
LOCATE 10" O.C. MAXIMUM, SUPPORT EVERY CHANGE IN DIRECTION.

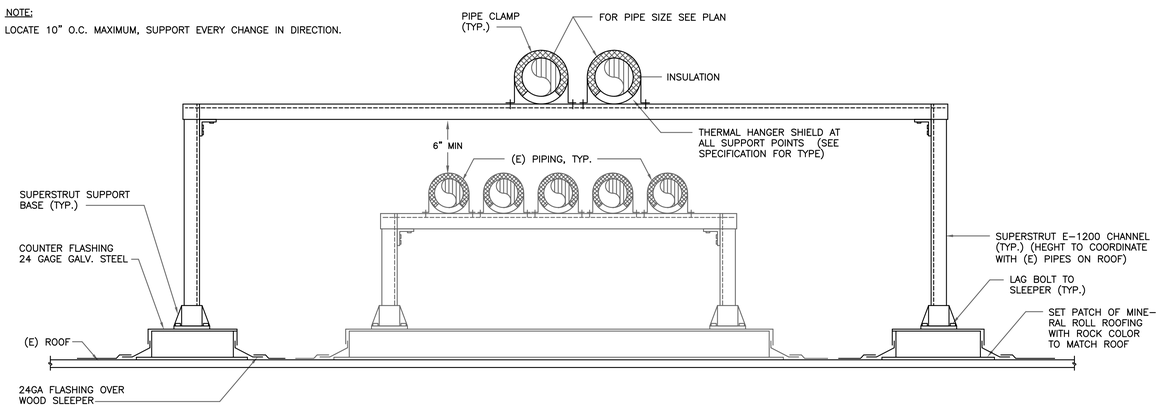

11 - TYPICAL PIPE SUPPORT DETAIL ON ROOF
SCALE: NONE

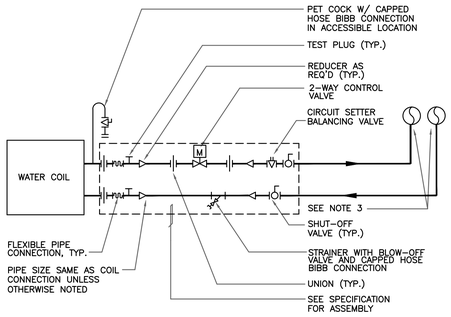

GENERAL NOTES:
1. COIL VALVING AND TEST PLUGS SHALL BE IN AN ACCESSIBLE LOCATION.
2. ARRANGE PIPING AND LOCATE UNIONS TO FACILITATE COIL AND CONTROL VALVE REMOVAL.
3. COIL PIPING TO MAIN LOOP SHALL BE BOTTOM CONNECTION EXCEPT WHERE FIELD CONDITIONS DO NOT ALLOW.
4. BRANCH PIPE SIZES ARE SHOWN ON COIL AND TERMINAL SCHEDULES.

6 - REHEAT COIL PIPING ASSEMBLY DETAIL
SCALE: NONE

Issues & Revisions:	Date

CONSULTANTS:
TED JACOB ENGINEERING GROUP
LEADING BY INNOVATION
JOB NO. MEI-001
1763 BROADWAY, OAKLAND, CA 94612-2105
(510) 763-4880 FAX (510) 763-5099
Copyright © 2013 Ted Jacob Engineering Group. All rights reserved. No part of this work may be reproduced, changed, copied or transmitted in any form or by any means, electronic or mechanical, including, but not retrieval system, except as may be expressly permitted in writing from TJEG.
REGISTERED PROFESSIONAL ENGINEER TED JACOB No. M18692 Exp. 12-31-14 MECHANICAL STATE OF CALIFORNIA

KEY PLAN

ARCHITECT/ENGINEERS:
MEI architecture + interiors
239 9TH STREET, SUITE 201
SAN FRANCISCO, CA 94103
T (415) 682-7376 F (415) 682-7339
www.meiarchitects.com

Drawing Title: **DETAILS**
Approved: Project Director

Project Title: **CONSOLIDATE / EXPAND MEDICAL PROCEDURES MINOR (CEMP)**
Location: **VANCHCS - MATHER, CA**
Date: **APRIL 22, 2014** | Checked: **PM** | Drawn: **TH**

Project Number: **612-111**
Building Number:
Drawing Number: **M9.02**
Dwg. -- of --

Office of Facilities Management
Department of Veterans Affairs

VA FORM 08-6231, OCT 1978 04/28/2014 2:06:26 PM

FULLY SPRINKLERED **100% CONSTRUCTION DOCUMENTS**

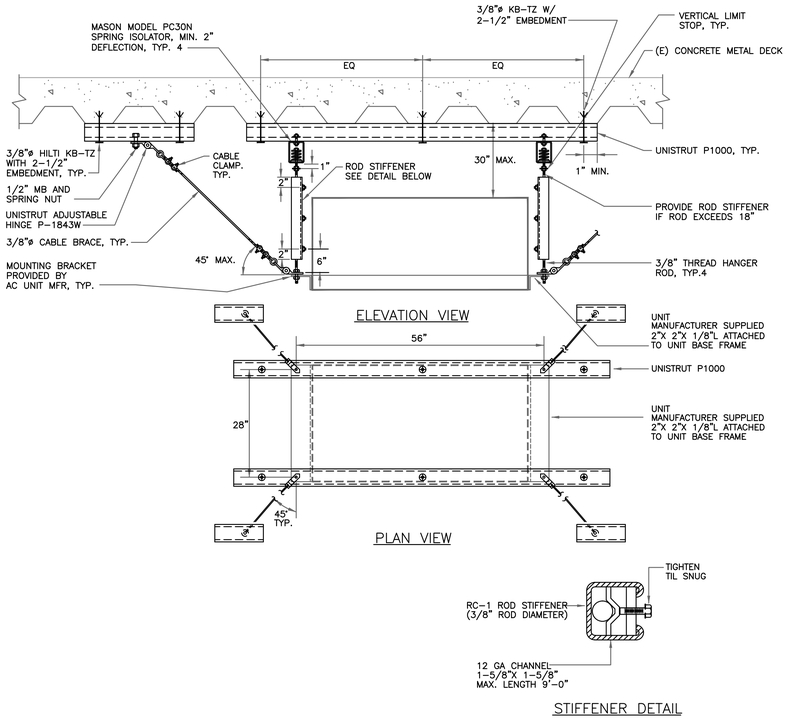

8 — EAC SUPPORT DETAIL
SCALE: NONE

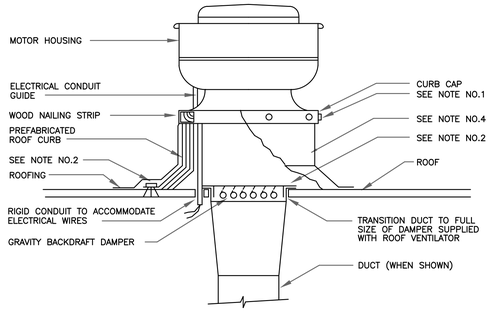

NOTES:
1. SECURE HOOD TO WOOD NAILING STRIP WITH 3/8" CADMIUM PLATED LAG BOLTS NOT OVER 12" ON CENTER
2. SECURE ROOF CURB, DUCTWORK AND DAMPER TO ROOF WITH 3/8"ø LAG SCREWS 12-INCHES ON CENTER.
3. SIZE OF DUCT THROUGH ROOF SHALL NOT BE LARGER THAN CURB SUPPLIED WITH HOOD.
4. SLOPE CURB AS REQD BY ROOF.

7 — ROOF EXHAUST FAN MOUNTING DETAIL
SCALE: NONE

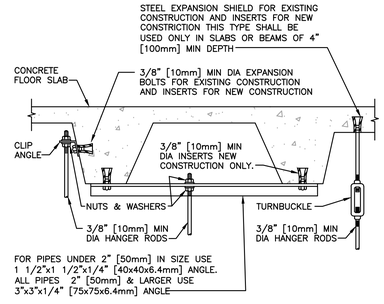

4 — SECURING HANGER RODS IN CONCRETE
SCALE: NONE

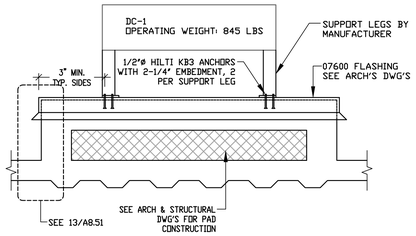

5 — DRY COOLER ANCHORAGE DETAIL
SCALE: NONE

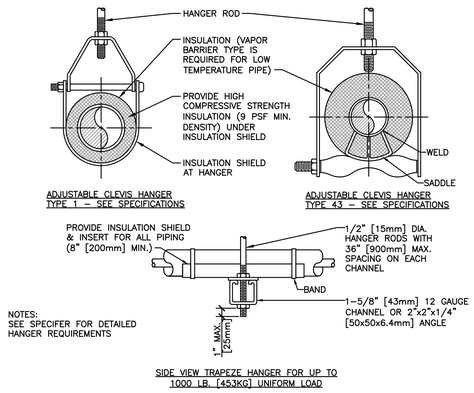

MAXIMUM PIPE/TUBING SUPPORT SPACING													
NOM. SIZE	IN. [mm]	THRU 3/4 THRU	1 [25]	1 1/4 [32]	1 1/2 [40]	2 [50]	2 1/2 [65]	3 [75]	4 [100]	5 [125]	6 [150]	8 [200]
PIPE	FT. [mm]	7 [2100]	7 [2100]	7 [2100]	9 [2700]	10 [3000]	11 [3400]	12 [3700]	14 [4100]	16 [4900]	17 [5200]	19 [5800]
TUBING	FT. [mm]	5 FT [1500]	6 [1800]	7 [2100]	8 [2400]	8 [2400]	9 [2700]	10 [3000]	12 [3700]	13 [4000]	14 [4100]	16 [4900]
NOTE: FOR TRAPEZE HANGER TAKE SPACING OF SMALLEST SIZE ON TRAPEZE.												

1 — PIPE HANGERS
SCALE: NONE

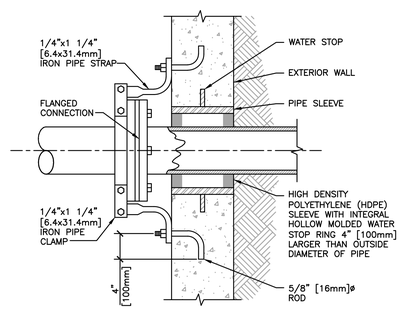

2 — SUPPORT ANCHOR (HEATING HOT WATER)
SCALE: NONE

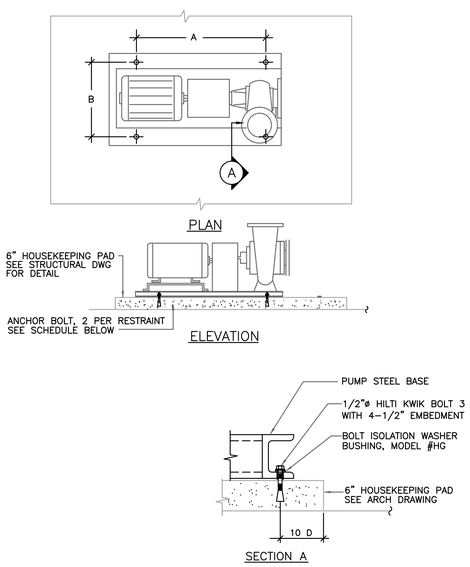

9 — HOT WATER PUMP (HWP) MOUNTING DETAIL
SCALE: NONE

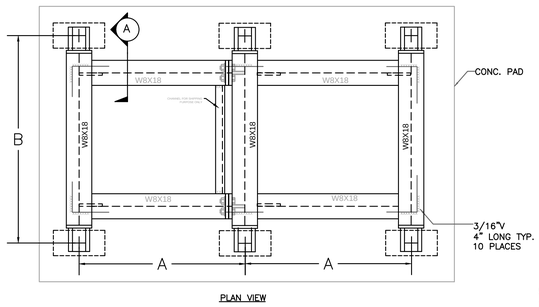

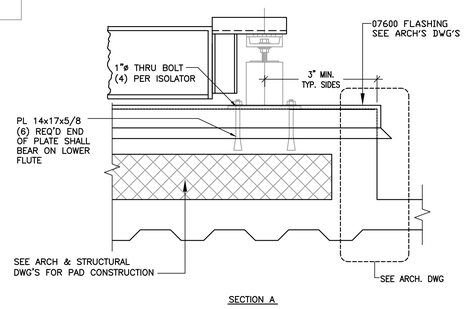

3 — AIR COOLED CHILLER (CH-1) ANCHORAGE DETAIL
SCALE: NONE

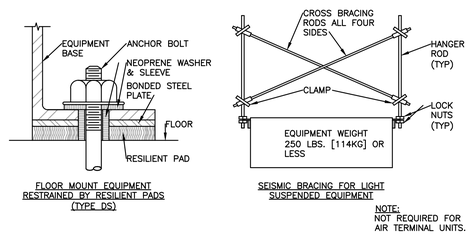

NOTE:
NOT REQUIRED FOR AIR TERMINAL UNITS.

3 — SEISMIC BRACING FOR EQUIPMENT
SCALE: NONE

Issues & Revisions:	Date

CONSULTANTS:
TED JACOB ENGINEERING GROUP
LEADING BY INNOVATION
JOB NO. MEI-001
1763 BROADWAY, OAKLAND, CA 94612-2105
(510) 763-4880 FAX (510) 763-5099
Copyright © 2013 Ted Jacob Engineering Group. All rights reserved. No part of this work may be reproduced, changed, copied or transmitted in any form or by any means, electronic or mechanical, including, but not retrieval system, except as may be expressly permitted in writing from TJEG.
REGISTERED PROFESSIONAL ENGINEER TED JACOB No. M18692 MECHANICAL STATE OF CALIFORNIA

KEY PLAN

ARCHITECT/ENGINEERS:
MEI architecture + interiors
239 9TH STREET, SUITE 201
SAN FRANCISCO, CA 94103
T (415) 682-7376 F (415) 682-7339
www.meiarchitects.com

Drawing Title: **DETAILS**
Approved: Project Director

Project Title: **CONSOLIDATE / EXPAND MEDICAL PROCEDURES MINOR (CEMP)**
Location: **VANCHCS - MATHER, CA**
Date: **APRIL 22, 2014** | Checked: **PM** | Drawn: **TH**
Project Number: **612-111**
Building Number:
Drawing Number: **M9.03** Dwg. -- of --

Office of Facilities Management
Department of Veterans Affairs

VA FORM 08-6231, OCT 1978 04/28/2014 2:05:53 PM

FULLY SPRINKLERED **100% CONSTRUCTION DOCUMENTS**