ELECTRICAL SYMBOLS AND ABBREVIATIONS

LIGHTING FIXTURE AND SWITCHES

- F1 / 5 — LIGHT FIXTURE, RECESSED MOUNTED
  - a = SWITCH 5 = CIRCUIT NUMBER
  - F1 = FIXTURE TYPE
- LIGHT FIXTURE, WALL MOUNTED
- FLUORESCENT FIXTURE, RECESSED MTD
- 2'x4' FLUORESCENT FIXTURE, SURFACE MTD
- LIGHT FIXTURE, PENDANT MOUNTED
- LIGHT FIXTURE, WALL MOUNTED
- LIGHT FIXTURE ON EMERGENCY CIRCUIT
- COVE LIGHT FIXTURE
- EMERGENCY LIGHTS WITH BATTERY PACK
- EXIT SIGN, WALL MOUNTED
- EXIT SIGN, CEILING MOUNTED
- EXIT SIGN, DOUBLE FACE
- a — SWITCH, SINGLE POLE, +48" AFF, UON
  - a = SWITCH 3 = THREE-WAY
  - D = DIMMER T = TIMER SWITCH, DIGITAL
  - LV = LOW VOLTAGE
- M — OCCUPANCY/MOTION SENSOR. PROVIDE WALL OR CEILING MTD TO SUITE LAYOUT. PROVIDE RELAY PACKS AS REQUIRED BY MANUFACTURER, +48" AFF, UON
- M — OCCUPANCY/MOTION SENSOR, CEILING MOUNTED

RECEPTACLES AND OUTLETS

- C — DUPLEX RECEPTACLE, +18" AFF, UON
  - G = GROUND FAULT CIRCUIT INTERRUPTER
  - T = TAMPER RESISTANT
- RECEPTACLE, DUPLEX ON EMERGENCY POWER
- QUADRAPLEX RECEPTACLE, +18" AFF, UON
- QUADRAPLEX RECEPTACLE ON EMERGENCY POWER
- DUPLEX RECEPTACLE, MOUNTED ABOVE COUNTER OR COUNTER HEIGHT
- QUADRAPLEX RECEPTACLE, MOUNTED ABOVE COUNTER OR COUNTER HEIGHT
- SPECIAL RECEPTACLE, SEE PLANS FOR SPECIFIC TYPE
- DUPLEX RECEPTACLE IN FLOOR
- QUADRAPLEX RECEPTACLE IN FLOOR
- RACEWAY WITH RECEPTACES AS INDICATED
- WIREMOLD
- J — JUNCTION BOX, CONNECT AS REQUIRED
- J — JUNCTION BOX, FLOOR MOUNTED CONNECT AS REQUIRED

DISTRIBUTION EQUIPMENT

- DP — DISTRIBUTION PANEL
- LIGHTING PANEL
- PANELBOARD CABINET, FLUSH MOUNTED
- PANELBOARD CABINET, SURFACE MOUNTED
- T — TRANSFORMER, PLAN

GROUNDING

- GROUND CONNECTION
- GROUND ROD
- GROUND ROD IN INSPECTION WELL
- G — GROUND COUNTERPOISE CABLE
- MGB — MASTER GROUND BAR

MOTORS AND CONTROLS

- MOTOR, SINGLE-PHASE
- MOTOR, THREE-PHASE
- PUSH BUTTON
- DISCONNECT SWITCH, FUSED
- DISCONNECT SWITCH, UNFUSED
- STARTER, COMBINATION WITH DISCONNECT SWITCH
- STARTER OR MOTOR CONTROLLER
- VFD — VARIABLE FREQUENCY DRIVE
- CONDUIT TERMINATED 6" AFF IN STANDARD BOX FOR EXTENSION TO EQUIPMENT AS DIRECTED.
- CONDUIT TERMINATED W/COUPLING (FLUSH W/FINISHED FLOOR) FOR EXTENSION TO EQUIPMENT AS DIRECTED.
- SM — MANUAL MOTOR STARTER WITH THERMAL OVERLOADS

FIRE ALARM

- FACP — FIRE ALARM CONTROL PANEL
- FSD — FIRE SMOKE DAMPER

DATA / VOICE COMMUNICATIONS

- C — DATA OUTLET WITH 3/4"C STUB UP TO ACCESSIBLE CEILING SPACE W/ PULL CORD UON, +18" AFF, UON
  - C = MOUNTED ABOVE COUNTER (OR IF SHOWN NEXT TO ABOVE MOUNTED RECEPTACLE)
  - W = MOUNTED 54" AFF
- C — TELEPHONE OUTLET W/ 3/4"C STUB UP TO ACCESSIBLE CEILING SPACE W/ PULL CORD UON, +18" AFF, UON
- C — DATA/PHONE OUTLET WITH 1"C STUB UP TO ACCESSIBLE CEILING SPACE W/ PULL CORD UON, +18" AFF, UON
- DATA/PHONE OUTLET, FLUSH FLOOR MOUNTED. PROVIDE WITH FLOOR RECESSED CAST BOX.
- TTB — TELEPHONE/DATA TERMINAL BOARD 3/4"THICK x 8FT HIGH FIRE RETARDANT PLYWOOD, LENGTH TO SUIT LAYOUT.

RACEWAYS / WIRING

- CONDUIT AND WIRE 2#12, 1#12G, 1/2"C, UON
- FLEXIBLE METAL CONDUIT
- CONDUIT CONCEALED UNDERGROUND, UNDER SLAB OR IN FLOOR
- A-1,3,5 — HOMERUN TO PNL "A" CKTS 1, 3, AND 5. NUMBER OF HASH MARKS INDICATE QTY OF CONDUCTORS IN CONDUIT. LONG MARK INDICATES NEUTRAL. SHORT MARKS INDICATE PHASE CONDUCTORS, NO HASH MARK INDICATES TWO WIRES (PHASE AND NEUTRAL). PROVIDE EQUIPMENT GROUND CONDUCTOR IN ALL BRANCH CIRCUITS. PROVIDE SEPARATE NEUTRAL FOR EACH ISOLATED GROUND CIRCUIT.
- LV — LOW VOLTAGE CABLE PER LIGHTING CONTROL MANUFACTURER'S REQUIREMENTS
- STUB-UP CONDUIT AND CONNECT AS REQUIRED
- STUB-DOWN CONDUIT AND CONNECT AS REQUIRED

DIAGRAM

- DELTA CONNECTION
- MOTOR, SINGLE-PHASE
- MOTOR, THREE-PHASE
- TRANSFORMER
- WYE CONNECTION
- EARTH GROUND
- PB — PULL BOX
- SWITCH, NORMALLY CLOSED LIMIT
- SWITCH, NORMALLY CLOSED TEMPERATURE ACTIVATED
- SWITCH, NORMALLY CLOSED TIME DELAY
- SWITCH, NORMALLY OPEN TIME DELAY
- SWITCH, SINGLE BREAK
- NORMALLY CLOSED RELAY CONTACT
- NORMALLY OPEN RELAY CONTACT
- FUSE WITH RATING
- MOLDED CASE CIRCUIT BREAKER
- LOW-VOLTAGE DRAWOUT AIR CIRCUIT BREAKER
- HIGH-VOLTAGE DRAWOUT AIR CIRCUIT BREAKER
- SWITCH AND FUSE UNIT
- R / 50 — RELAY
  - 50 = INSTANTANEOUS OVERCURRENT OR RATE-OF-RISE
  - 51 = AC-TIME OVERCURRENT
  - 67 = AC-DIRECTIONAL OVERCURRENT
  - 86 LOCKING OUT
- DISCONNECT SWITCH, FUSED
- DISCONNECT SWITCH, UNFUSED
- FUSIBLE LINK
- STARTER, COMBINATION WITH DISCONNECT SWITCH
- STARTER OR MOTOR CONTROLLER
- VFD — VARIABLE FREQUENCY DRIVE
- G — GENERATOR, POWER
- BATTERY
- CAPACITOR
- POTHEAD
- STRESS CONE
- R — RECTIFIER, CATHODIC PROTECTION SANITARY
- M — METER
- A — AMMETER
- V — VOLTMETER
- W — WATTMETER
- WH — WATT-HOUR METER
- DM — DIGITAL METERING
- GFR — GROUND FAULT RELAY
- TVSS — TRANSIENT VOLTAGE SURGE SUPPRESSION
- AUTOMATIC TRANSFER SWITCH

DETAIL REFERENCE

- 1 — SHEET NOTE
- F2 — LIGHTING TAG
- P2 — FEEDER TAG
- ITEM 1 — MECHANICAL EQUIPMENT DESIGNATION
- A / E-2 — SECTION NUMBER / SHEET NUMBER
- N — NORTH ARROW (REFERENCE)

ABBREVIATIONS

AC	ALTERNATING CURRENT OR ARMORED CABLE
A/C	AIR CONDITIONER
AF	AMPERE FRAME
AFF	ABOVE FINISHED FLOOR
AUX	AUXILIARY
AMP, A	AMPERE
AT	AMPERE TRIP
ATS	AUTOMATIC TRANSFER SWITCH
BD	BOARD
C	CONDUIT
CAB	CABINET
CB	CIRCUIT BREAKER
CCT	CIRCUIT
CLG	CEILING
CO	CONDUIT ONLY
CONT	CONTINUOUS
CT	CURRENT TRANSFORMER
DIA	DIAMETER
DIAG	DIAGRAM
DISC	DISCONNECT
DIST	DISTRIBUTION
DN	DOWN
DPST	DOUBLE POLE SINGLE THROW
EC	ELECTRICAL CONTRACTOR
ELEC	ELECTRICAL
EMT	ELECTRICAL METALLIC TUBING
EP	EMERGENCY POWER
EPO	EMERGENCY POWER OFF
EUGP	EXISTING UNDERGROUND PRIMARY
EUGS	EXISTING UNDERGROUND SECONDARY
(E)	EXISTING TO REMAIN
(ER)	EXISTING TO BE RELOCATED
FIXT	FIXTURE
FLEX	FLEXIBLE
G	GROUND
GALV	GALVANIZED
GFCI	GROUND FAULT CIRCUIT INTERRUPER
GFP	GROUND FAULT PROTECTION
GRC	GALVANIZED RIGID CONDUIT
HG	HOSPITAL GRADE
HP	HORSEPOWER
HT	HEIGHT
HV	HIGH VOLTAGE
HZ	HERTZ
IG	ISOLATED GROUND
ISO	ISOLATED
J-BOX	JUNCTION BOX
KVA	KILOVOLT AMPERE
KW	KILOWATT
KWH	KILOWATT HOUR
KAIC	KILO-AMPERES INTERRUPTING CAPACITY
LT	LIGHT
LV	LOW VOLTAGE
MFR	MANUFACTURER
MAX	MAXIMUM
MIN	MINIMUM
MCC	MOTOR CONTROL CENTER
MT	MOUNT
MTD	MOUNTED
MLO	MAIN LUGS ONLY
MCB	MAIN CIRCUIT BREAKER
NA	NON AUTOMATIC
NC	NORMALLY CLOSE
NF	NONFUSIBLE
NEU	NEUTRAL
NIC	NOT IN CONTRACT
NTS	NOT TO SCALE
NO	NORMALLY OPEN
(N)	NEW
OC	ON CENTER
PH	PHASE
PNL	PANEL
PB	PULL BOX
P	POLE
PT	POTENTIAL TRANSFORMER
RECEPT	RECEPTACLE
(R)	REMOVE
(RE)	RELOCATED
S/N	SOLID NEUTRAL
SES	SERVICE ENTRANCE SECTION
SHT	SHEET
STD	STANDARD
SW	SWITCH
SWBD	SWITCHBOARD
SWGR	SWITCHGEAR
TRANSF.	TRANSFORMER
TTB	TELEPHONE TERMINAL BOARD
TYP	TYPICAL
UC	UNDERCOUNTER
UL	UNDERWRITERS LABORATORY
UON	UNLESS OTHERWISE NOTED
V	VOLT
VA	VOLTAMPERE
VFD	VARIABLE FREQUENCY DRIVE
W	WATT OR WIRE
WP	WEATHERPROOF
WW	WIREWAY
XFER	TRANSFER
XFMR	TRANSFORMER

APPLICABLE CODES

ALL WORK SHALL BE IN ACCORDANCE WITH THE REQUIREMENTS OF ALL APPLICABLE PARTS OF LATEST EFFECTIVE EDITIONS.

ALL WORK PERFORMED UNDER THIS CONTRACT SHALL CONFORM TO THE FOLLOWING CODES AND REGULATIONS AS APPLICABLE:

INTERNATIONAL BUILDING CODE (IBC) (AS REFERENCED IN VA DESIGN DOCUMENTS)

NFPA 101 LIFE SAFETY CODE

NFPA NATIONAL FIRE CODES WITH THE EXCEPTION OF NFPA 5000 AND NFPA 900

OCCUPATIONAL, SAFETY AND HEALTH ADMINISTRATION (OSHA) STANDARDS.

VA SEISMIC DESIGN REQUIREMENTS, H-18-8

NATIONAL ELECTRICAL CODE (NEC)

INTERNATIONAL PLUMBING CODE (IPC)

SAFETY CODE FOR ELEVATORS AND ESCALATORS, AMERICAN SOCIETY OF MECHANICAL ENGINEERS (ASME) A 17.1.

ASME BOILER AND PRESSURE VESSEL CODE

ASME CODE FOR PRESSURE PIPING

ARCHITECTURAL BARRIERS ACT ACCESSIBILITY STANDARDS (ABAAS) INCLUDING VA SUPPLEMENT, BARRIER FREE DESIGN GUIDE (PG-18-13)

BUILDING CODE REQUIREMENTS FOR REINFORCED CONCRETE, AMERICAN CONCRETE INSTITUTE AND COMMENTARY (ACI 318) MANUAL OF STEEL CONSTRUCTION, LOAD AND RESISTANCE FACTOR DESIGN SPECIFICATIONS FOR STRUCTURAL STEEL BUILDINGS, AMERICAN INSTITUTE OF STEEL CONSTRUCTION (AISC)

ENERGY POLICY ACT OF 2005 (EPACT)

DOE INTERIM FINAL RULE: ENERGY CONSERVATION STANDARDS FOR NEW FEDERAL, COMMERCIAL AND MULTI-FAMILY HIGH-RISE RESIDENTIAL BUILDINGS AND NEW LOW-RISE RESIDENTIAL BUILDINGS, 10 CFR PARTS 433, 434 AND 435.

FEDERAL LEADERSHIP IN HIGH PERFORMANCE AND SUSTAINABLE BUILDINGS: MEMORANDUM OF UNDERSTANDING (MOU)

EXECUTIVE ORDER 13423: STRENGTHENING FEDERAL ENVIRONMENTAL, ENERGY, AND TRANSPORTATION MANAGEMENT.

THE PROVISIONS FOR CONSTRUCTION AND SAFETY SIGNS. STATED IN THE GENERAL REQUIREMENTS SECTION 01010 OF THE VA MASTER CONSTRUCTION SPECIFICATION.

VENTILATION FOR ACCEPTABLE INDOOR AIR QUALITY – ASHRAE STANDARD 62.1– 2004.

SAFETY STANDARD FOR REFRIGERATION SYSTEMS – ASHRAE STANDARD 15 – 2007.

UNLESS OTHERWISE STATED, IT IS INTENDED THAT THE ABOVE CODES AND REGULATIONS REFER TO THE LATEST EDITION OR REVISION IN EFFECT ON THE DATE OF THE CONTRACT. NOTHING ON THE DRAWINGS IS TO BE CONSTRUED AS REQUIRING OR PERMITTING WORK THAT IS CONTRARY TO THE ABOVE LISTED CODES AND REGULATIONS, OR OTHER LOCAL, STATE OR FEDERAL CODES OR REGULATIONS WHICH MAY BE APPLICABLE.

GENERAL NOTES

1. MAINTAIN FIRE RATING OF ALL FLOORS, CEILING, AND WALLS PENETRATED BY ANY ELECTRICAL WORK.
2. PROVIDE U.L. LISTED FIRE RATED SEALS FOR ALL RACEWAY PENETRATIONS THROUGH FIRE RATED WALLS, SLABS, AND CEILING. WHERE CABLE TRAY PENETRATES FIRE RATED WALLS, CONVERT TO CONDUITS OF SAME CAPACITY AND PACK WITH U.L. LISTED SEALS.
3. BRANCH CIRCUITS SHALL BE MINIMUM WIRE SIZE #12, UON. FOR HOMERUNS LONGER THAN 70 FEET, FOR 120V & 160 FOR 277V. MINIMUM WIRE SIZE SHALL BE #10. PROVIDE REQ'D. QUANTITY OF CONDUCTORS TO ACCOMODATE CIRCUITING SHOWN.
4. PROVIDE GROUNDING CONDUCTOR SIZED PER NEC FOR ALL BRANCH CIRCUITS.
5. TURN OVER TO OWNER ANY MATERIAL AND EQUIPMENT OF VALUE WHICH IS REMOVED DURING DEMOLITION OR DISPOSED OF THESE, IF SO DIRECTED BY OWNER.
6. COORDINATE ALL ELECTRICAL REQUIREMENTS FOR STERIS EQUIPMENT WITH MANUFACTURER. ELECTRICAL DRAWINGS INDICATE POWER CONNECTIONS PER MANUFACTURER DIRECTION. COORDINATE PROJECT SPECIFIC REQUIREMENTS AND CONNECTIONS WITH STERIS SHOP DRAWINGS. STERIS INTEGRATION LAYOUT SHALL INCLUDE CONDUIT SCHEDULES, ELEVATIONS, AND DETAILS. CONTRACTOR SHALL COORDINATE WITH STERIS FOR EXACT CONNECTION REQUIREMENTS AND BID ACCORDINGLY.

Issues & Revisions:	Date

CONSULTANTS:

TED JACOB ENGINEERING GROUP
LEADING BY INNOVATION
JOB NO. MEI-001
1763 BROADWAY, OAKLAND, CA 94612-2105
(510) 763-4880 FAX (510) 763-5099

Copyright © 2013 Ted Jacob Engineering Group. All rights reserved. No part of this work may be reproduced, changed, copied or transmitted in any form or by any means, electronic or mechanical, including, but not retrieval system, except as may be expressly permitted in writing from TJEG.

REGISTERED PROFESSIONAL ENGINEER — OCTAVIAN J. DRAGOS — No.E014431 — Exp. 6-30-14 — CIVIL — STATE OF CALIFORNIA

KEY PLAN

ARCHITECT/ENGINEERS:

MEI architecture + interiors
239 9TH STREET, SUITE 201
SAN FRANCISCO, CA 94103
T (415) 662-7376 F (415) 662-7339
www.meiarchitects.com

Drawing Title: **ELECTRICAL SYMBOLS, ABBREVIATIONS AND GENERAL NOTES**

Approved: Project Director

Project Title: **CONSOLIDATE / EXPAND MEDICAL PROCEDURES MINOR (CEMP)**

Location: **VANCHCS - MATHER, CA**

Date: **APRIL 22, 2014** | Checked: **JL** | Drawn: **SU**

Project Number: **612-111**

Building Number:

Drawing Number: **E0-1** Dwg. -- of --

Office of Facilities Management

Department of Veterans Affairs

VA FORM 08-6231, OCT 1978 04/28/2014 1:33:49 PM

FULLY SPRINKLERED **100% CONSTRUCTION DOCUMENTS**

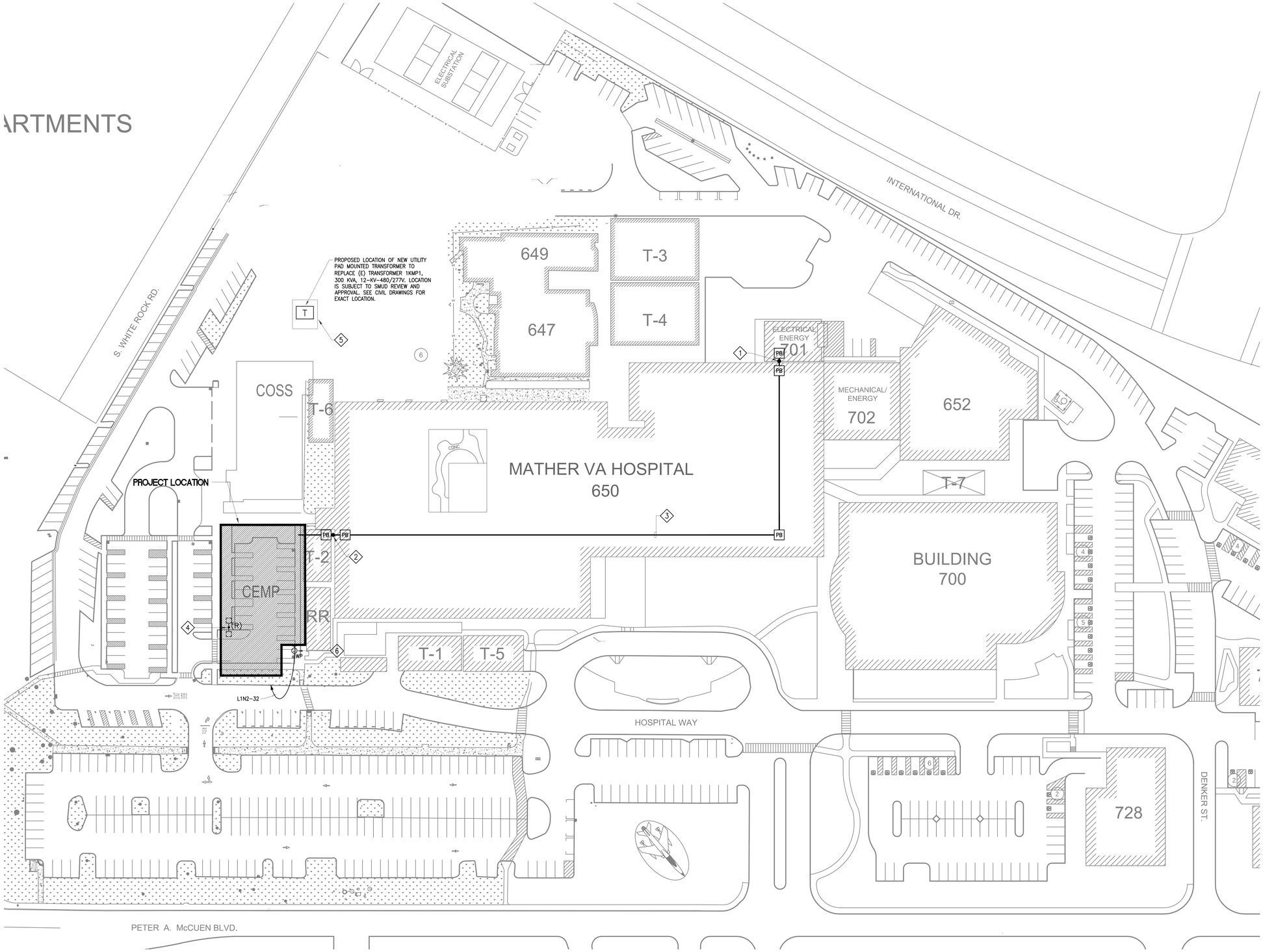

1 SITE PLAN

1" = 40'-0"

GENERAL NOTES

1. THE PROJECT REQUIRES A NEW ELECTRICAL SERVICE FROM SACRAMENTO MUNICIPAL UTILITY DISTRICT, SMUD, PRIMARY SERVICE. THE FINAL REQUIREMENTS SHALL BE DEVELOPED BY SMUD AFTER A SERVICE ORDER IS ISSUED. THE ELECTRICAL CONTRACTOR SHALL COORDINATE WITH SMUD FOR EXACT SERVICE REQUIREMENTS.
2. UNDERGROUND WORK SHALL BE COORDINATED WITH CIVIL AND MECHANICAL UTILITIES.
3. THIS DRAWING INDICATES EXISTING CONDITIONS OBTAINED FROM EXISTING DRAWING AND LIMITED FIELD SURVEY. THE ENGINEER ASSUMES NO RESPONSIBILITY FOR THE COMPLETENESS AND ACCURACY OF THESE CONDITIONS. PRIOR TO COMMENCING WORK, THE CONTRACTOR SHALL VERIFY EXISTING CONDITIONS AND PROMPTLY NOTIFY THE ARCHITECT OF ANY DISCREPANCIES ENCOUNTERED.

SHEET NOTES

1. EXTEND NEW EMERGENCY FEEDER FROM (E) ESSENTIAL DISTRIBUTION BOARD TO BE DETERMINED TO NEW ATS-2 LOCATED IN CEMP BUILDING. SEE SHEET E5-1.
2. ROUTE NEW EMERGENCY FEEDER CONDUIT OVER THE PARAPET AND DOWN TO FACE OF BUILDING. COORDINATE EXACT LOCATION WITH ARCHITECT.
3. PROPOSED ROUTING OF 277/480V, 3ø, 4W EMERGENCY POWER ON ROOF OF BUILDING 650. EXACT ROUTING TO BE FIELD VERIFIED.
4. REMOVE (E) POLE MOUNTED LIGHT. COORDINATE IN FIELD.
5. COORDINATE ELECTRICAL SERVICE INSTALLATION WITH SMUD AND VA FACILITY. EXACT REQUIREMENTS, ROUTING, METERING, AND CONNECTIONS SHALL BE VERIFIED WITH SMUD.

   COORDINATE REQUIREMENTS WITH SMUD AND VA FACILITY FOR REPLACEMENT OF (E) SMUD TRANSFORMER FOR UPGRADED SERVICE TO SERVE BOTH THE (N) CEMP AND (E) COSS BUILDINGS. SERVICE OPERATION, METERING, AND CONNECTION TO THE (E) COSS BUILDING SHALL BE VERIFIED WITH SMUD.

   SMUD SHALL PROVIDE:
   a. PRIMARY CONDUCTORS AND CONNECTION (REQUIREMENTS TO BE VERIFIED).
   b. PAD MOUNTED UTILITY TRANSFORMER.
   c. METER AND CURRENT TRANSFORMERS AS REQUIRED.
   d. INSPECTION.

   ELECTRICAL CONTRACTOR SHALL PROVIDE:
   a. PRIMARY CONDUIT, PULLBOXES, TRENCH, AND BACKFILL (REQUIREMENTS TO BE VERIFIED).
   b. TRANSFORMER CONCRETE PAD AND WELL.
   c. SECONDARY CONDUIT, CONDUCTORS, TRENCH, AND BACKFILL.
6. FOR IRRIGATION CONTROLLER – 120V. COORDINATE EXACT LOCATION WITH LANDSCAPE DRAWINGS.

Issues & Revisions:	Date

CONSULTANTS:

TED JACOB ENGINEERING GROUP
LEADING BY INNOVATION
JOB NO. MEI-001
1763 BROADWAY, OAKLAND, CA 94612-2105
(510) 763-4880 FAX (510) 763-5099

Copyright © 2013 Ted Jacob Engineering Group. All rights reserved. No part of this work may be reproduced, changed, copied or transmitted in any form or by any means, electronic or mechanical, including, but not retrieval system, except as may be expressly permitted in writing from TJEG.

REGISTERED PROFESSIONAL ENGINEER OCTAVIAN J. DRAGOS No.E014431 Exp. 6-30-14 CIVIL STATE OF CALIFORNIA

KEY PLAN

ARCHITECT/ENGINEERS:

MEI architecture + interiors
239 9TH STREET, SUITE 201
SAN FRANCISCO, CA 94103
T (415) 682-7376 F (415) 682-7339
www.meiarchitects.com

Drawing Title: SITE PLAN
Approved: Project Director

Project Title: CONSOLIDATE / EXPAND MEDICAL PROCEDURES MINOR (CEMP)
Location: VANCHCS - MATHER, CA
Date: APRIL 22, 2014 | Checked: JL | Drawn: SU

Project Number: 612-111
Building Number:
Drawing Number: ES1-1
Dwg. -- of --

Office of Facilities Management
Department of Veterans Affairs

VA FORM 08-6231, OCT 1978
04/28/2014 1:34:41 PM

FULLY SPRINKLERED
100% CONSTRUCTION DOCUMENTS

GENERAL NOTES

1. WATTSTOPPER TECHNICIAN SHALL PROVIDE FIELD SERVICE WITHIN 3 DAYS OF FACILITY REQUEST. NO VIRTUAL ACCESS SHALL BE PROVIDED.

SHEET NOTES

1. FOR WATTSTOPPER ROOM CONTROLLER.
2. SEE DIAGRAM 4, DWG. E5.2 FOR SWITCHING REQUIREMENTS.
3. SEE DIAGRAM 2, DWG. E5.3 FOR SWITCHING REQUIREMENTS.
4. FOR WATTSTOPPER EMERGENCY LIGHTING CONTROL UNIT (ELCU-200).
5. SEE DIAGRAM 2, DWG. E5.2 FOR SWITCHING REQUIREMENTS.
6. SEE DIAGRAM 1, DWG. E5.2 FOR SWITCHING REQUIREMENTS.
7. SEE DIAGRAM 2, DWG. E5.3 FOR SWITCHING REQUIREMENTS.
8. SEE DIAGRAM 1, DWG. E5.3 FOR SWITCHING REQUIREMENTS.
9. COORDINATE MOUNTING HEIGHT OF LIGHT FIXTURES WITH CABLE TRAY IN THE FIELD.
10. CONNECT TO ABOVE COUNTER RECEPTACLE. SEE DWG. E3.1 FOR CIRCUITING.
11. SEE INTERIOR LIGHTING SPECIFICATION.
12. SEE DRAWING EP3-1 FOR LIGHTING.
13. SURFACE MOUNT FIXTURE.

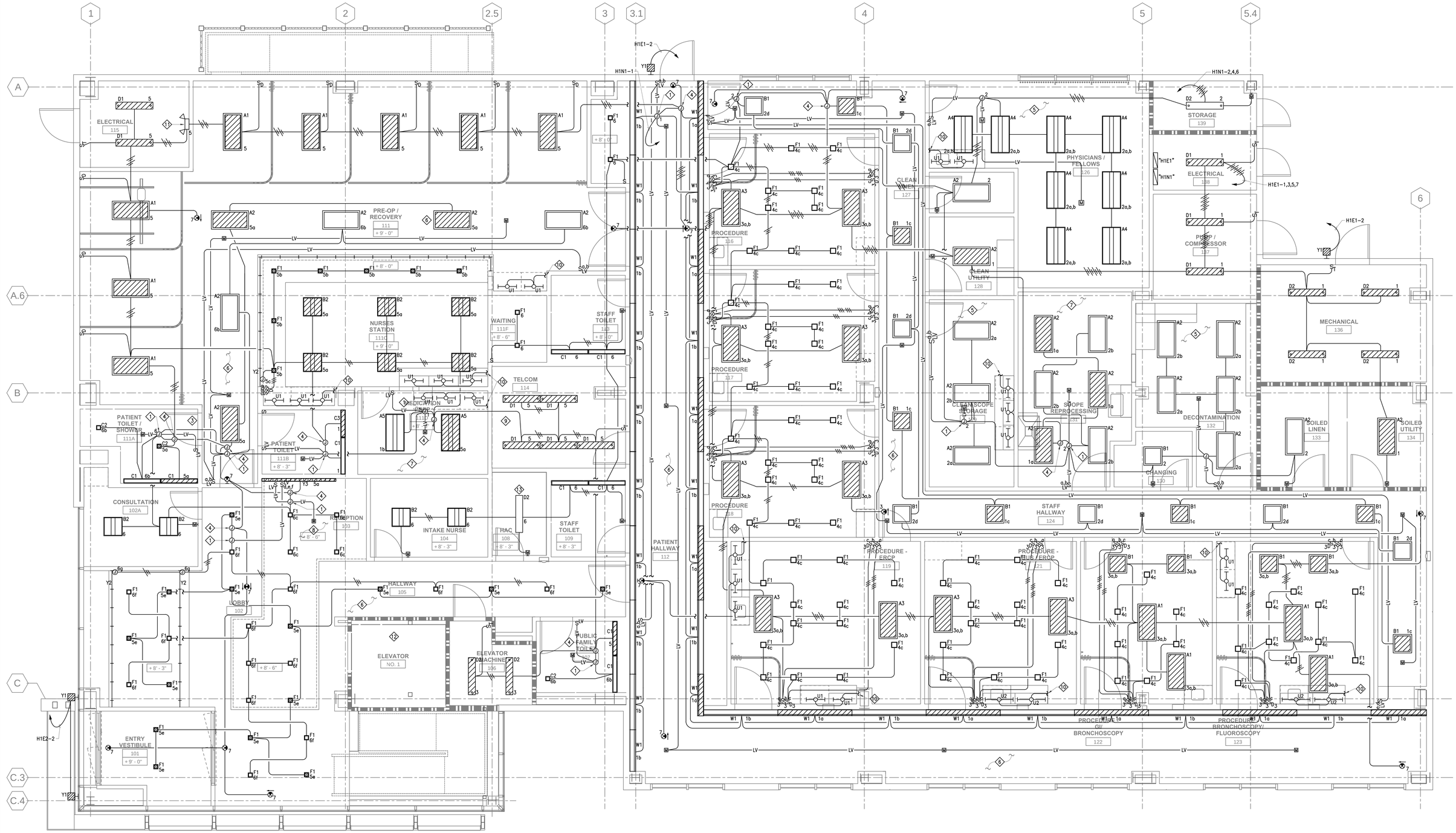

1 FIRST FLOOR LIGHTING PLAN

1/4" = 1'-0"

Issues & Revisions:	Date

CONSULTANTS:

TED JACOB ENGINEERING GROUP
LEADING BY INNOVATION
JOB NO. MEI-001
1763 BROADWAY, OAKLAND, CA 94612-2105
(510) 763-4880 FAX (510) 763-5099

Copyright © 2013 Ted Jacob Engineering Group. All rights reserved. No part of this work may be reproduced, changed, copied or transmitted in any form or by any means, electronic or mechanical, including, but not retrieval system, except as may be expressly permitted in writing from TJEG.

REGISTERED PROFESSIONAL ENGINEER OCTAVIAN J. DRAGOS No.E014431 Exp. 6-30-14 ELECTRICAL CALIFORNIA

KEY PLAN

ARCHITECT/ENGINEERS:

MEI architecture + interiors
239 9TH STREET, SUITE 201
SAN FRANCISCO, CA 94103
T (415) 682-7376 F (415) 682-7339
www.meiarchitects.com

Drawing Title: **FIRST FLOOR LIGHTING PLAN**

Approved: Project Director

Project Title: **CONSOLIDATE / EXPAND MEDICAL PROCEDURES MINOR (CEMP)**

Location: **VANCHCS - MATHER, CA**

Date: **APRIL 22, 2014** | Checked: **JL** | Drawn: **SU**

Project Number: **612-111**

Building Number:

Drawing Number: **EL2-1**

Dwg. -- of --

Office of Facilities Management

Department of Veterans Affairs

VA FORM 08-6231, OCT 1978

04/28/2014 1:35:32 PM

FULLY SPRINKLERED

100% CONSTRUCTION DOCUMENTS

GENERAL NOTES

1. WATTSTOPPER TECHNICIAN SHALL PROVIDE FIELD SERVICE WITHIN 3 DAYS OF FACILITY REQUEST. NO VIRTUAL ACCESS SHALL BE PROVIDED.

SHEET NOTES

1. FOR WATTSTOPPER ROOM CONTROLLER.
2. FOR WATTSTOPPER EMERGENCY LIGHTING CONTROL UNIT (ELCU-200).
3. SEE DIAGRAM 1, DWG. E5.3 FOR SWITCHING REQUIREMENTS.
4. SEE DIAGRAM 3, DWG. E5.3 FOR SWITCHING REQUIREMENTS.
5. COORDINATE MOUNTING HEIGHT OF LIGHT FIXTURES WITH CABLE TRAY IN THE FIELD.
6. CONDUIT TO ABOVE COUNTER RECEPTACLE. SEE DWG. E3.2 FOR CIRCUITING.
7. SEE DIAGRAM 2, DWG. E5.3 FOR SWITCHING REQUIREMENTS.
8. SEE DIAGRAM 2, DWG. E5.2 FOR SWITCHING REQUIREMENTS.
9. SEE DIAGRAM 5, DWG. E5.2 FOR SWITCHING REQUIREMENTS.
10. SEE DIAGRAM 1, DWG. E5.2 FOR SWITCHING REQUIREMENTS.
11. SURFACE MOUNT LIGHT FIXTURE.

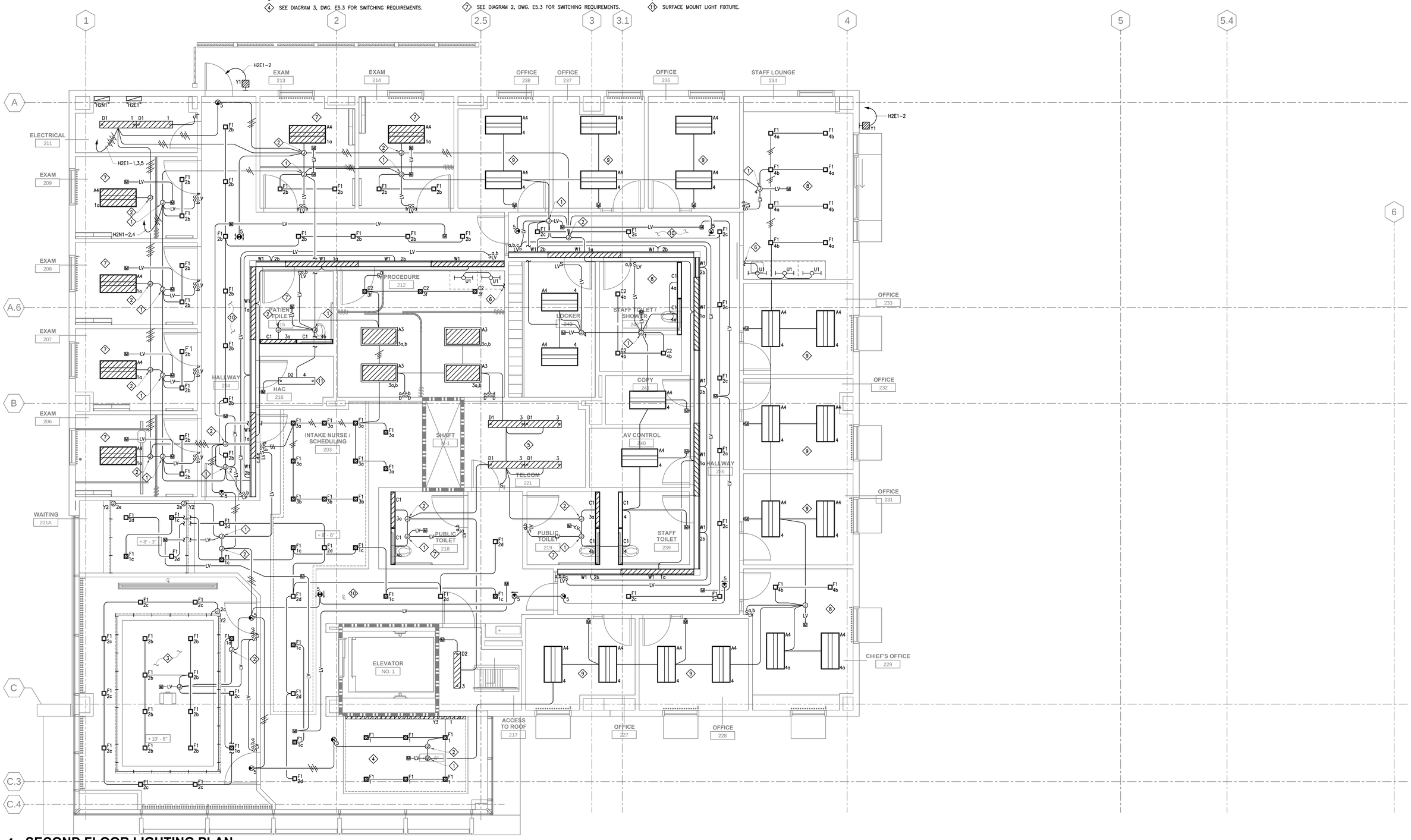

1 SECOND FLOOR LIGHTING PLAN

1/4" = 1'-0"

Issues & Revisions:	Date

CONSULTANTS:

TED JACOB ENGINEERING GROUP
LEADING BY INNOVATION
JOB NO. MEI-001
1763 BROADWAY, OAKLAND, CA 94612-2105
(510) 763-4880 FAX (510) 763-5099

Copyright © 2013 Ted Jacob Engineering Group. All rights reserved. No part of this work may be reproduced, changed, copied or transmitted in any form or by any means, electronic or mechanical, including, but not retrieval system, except as may be expressly permitted in writing from TJEG.

REGISTERED PROFESSIONAL ENGINEER OCTAVIAN J. DRAGOS No.E014431 Exp. 6-30-14 ELECTRICAL CALIFORNIA

KEY PLAN

ARCHITECT/ENGINEERS:

MEI architecture + interiors
239 9TH STREET, SUITE 201
SAN FRANCISCO, CA 94103
T (415) 682-7376 F (415) 682-7339
www.meiarchitects.com

Drawing Title: **SECOND FLOOR LIGHTING PLAN**

Approved: Project Director

Project Title: **CONSOLIDATE / EXPAND MEDICAL PROCEDURES MINOR (CEMP)**

Location: **VANCHCS - MATHER, CA**

Date: **APRIL 22, 2014** | Checked: **JL** | Drawn: **SU**

Project Number: **612-111**

Building Number:

Drawing Number: **EL2-2** Dwg. -- of --

Office of Facilities Management

Department of Veterans Affairs

VA FORM 08-6231, OCT 1978 04/28/2014 1:36:09 PM

FULLY SPRINKLERED **100% CONSTRUCTION DOCUMENTS**

SHEET NOTES

1. TRANSFORMER TO BE CEILING MOUNTED ABOVE PANEL. SEE MOUNTING DETAIL ON SHEET E7-3.
2. MASTER GROUND BAR. SEE DETAIL ON SHEET E7-1.
3. FOR ELEVATOR MOTOR POWER. DISCONNECT SWITCH AND FUSE SIZE PER ELEVATOR MANUFACTURER'S REQUIREMENTS. COORDINATE WITH ELEVATOR CONTRACTOR FOR EXACT LOCATION AND ROUGH-IN REQUIREMENTS.
4. FOR ELEVATOR CAB LIGHTING AND CONTROL. DISCONNECT SWITCH AND FUSE SIZE PER ELEVATOR MANUFACTURER'S REQUIREMENTS. COORDINATE WITH ELEVATOR CONTRACTOR FOR EXACT LOCATION AND ROUGH-IN REQUIREMENTS.
5. J-BOX BELOW WALL CABINET AND EMPTY RACEWAY FOR COUNTER TASK LIGHT.
6. J-BOX BELOW THE SINK FOR ELECTRONIC SENSOR OPERATED FAUCET – 120V.
7. FOR FIRE ALARM CONTROL PANEL. COORDINATE WITH FIRE ALARM DRAWINGS FOR EXACT LOCATION.
8. FOR HEADWALL UNIT EMERGENCY BRANCH POWER (TYPICAL). QUANTITY OF RECEPTACLE SHALL BE PER CODE AND PER APPROVED SHOP DRAWINGS.
9. FOR HEADWALL UNIT NORMAL POWER (TYPICAL). QUANTITY OF RECEPTACLE SHALL BE PER CODE AND PER APPROVED SHOP DRAWINGS.
10. MEDICAL AIR COMPRESSOR CONTROL PANEL WITH BUILT-IN STARTERS AND DISCONNECT SWITCH PROVIDED UNDER DIV. 23.
11. MEDICAL VACUUM PUMPS CONTROL PANEL WITH BUILT-IN STARTERS AND DISCONNECT SWITCH PROVIDED UNDER DIV. 23.
12. ELEVATOR SUMP PUMP (ESP-1) CONTROL PANEL WITH BUILT-IN STARTERS AND DISCONNECT SWITCH PROVIDED UNDER DIV. 23.
13. FOR MASTER ALARM PANEL –120V. SEE PLUMBING DRAWINGS FOR EXACT LOCATION.
14. FOR AREA ALARM PANEL –120V. SEE PLUMBING DRAWINGS FOR QUANTITY AND EXACT LOCATION.
15. FOR ELECTRIC WATER COOLER (P-609) – 5A, 120V. COORDINATE CONNECTION REQUIREMENTS WITH MANUFACTURER.
16. FOR COPIER – 120V.
17. FOR STERIS EQUIPMENT BOOM: (RMS. 116, 117, 118 & 122)
    (2) EMERGENCY DUPLEX RECEPTACLES EACH PER CIRCUIT (3 CIRCUITS)
    (1) 1 AMP, 120V FOR PNEUMATIC BRAKE
    (1) 20 AMP, 120V FOR MONITOR.
    PROVIDE FLEXIBLE METAL CONDUIT AS REQUIRED FOR STERIS CONNECTION.
18. FOR STERIS ANESTHESIA BOOM: (RMS. 119, 121, 123)
    (1) EMERGENCY DUPLEX RECEPTACLES EACH PER CIRCUIT (2 CIRCUITS)
    (1) EMERGENCY DUPLEX RECEPTACLES EACH PER CIRCUIT (2 CIRCUITS)
    (1) 1 AMP, 120V FOR PNEUMATIC BRAKE
    (1) 20 AMP, 120V FOR MONITOR.
    PROVIDE FLEXIBLE METAL CONDUIT AS REQUIRED FOR STERIS CONNECTION.
19. FOR STERIS DOCUMENTATION BOOM: (RMS. 116, 117, 118, 122)
    (1) EMERGENCY DUPLEX RECEPTACLES EACH PER CIRCUIT (2 CIRCUITS)
    (1) EMERGENCY DUPLEX RECEPTACLE EACH PER CIRCUIT (1 CIRCUIT)
    (1) 1 AMP, 120V FOR PNEUMATIC BRAKE
    (2) 20 AMP, 120V FOR EACH MONITOR (2 CIRCUITS)
    PROVIDE FLEXIBLE METAL CONDUIT AS REQUIRED FOR STERIS CONNECTION.
20. FOR BMS CONTROL MODULE – 120V.
21. FOR MAIN MEDICATION DISPENSING UNIT – 125W, 120V.
22. FOR OMNICELL – 2 AMPS, 120V.
23. FOR STERIS AV RACK – 120V.
24. FOR STERIS PAN/TILT CAMERA – 120V.
25. FOR STERIS TOUCH PANEL MONITOR – 120V.
26. COORDINATE EXACT LOCATION AND POWER REQUIREMENTS WITH STERIS APPROVED HARMONY INTEGRATION SYSTEM SHOP DRAWINGS.
27. ONE 1"C FROM MACHINE ROOM TO AUTOMATIC TRANSFER SWITCH. PROVIDE CONTROL WIRING PER ELEVATOR MANUFACTURER REQUIREMENT.
28. FOR ENDOSCOPE PROCESSING SYSTEM (EPS) – 10.1A, 480V, 3ø. COORDINATE DISCONNECT SWITCH LOCATION WITH VENDOR PRIOR TO ROUGHING-IN. PROVIDE 30AMP, 3P DISCONNECT SWITCH.
29. FOR EPS PRINTER – 120V.
30. DUPLEX AIR COMPRESSOR CONTROL PANEL WITH BOLT-IN STARTERS AND FUSED DISCONNECT SWITCH PROVIDED UNDER DIV. 23.
31. FOR GE C-ARM WORKSTATION – 120V.
32. FOR STERIS EQUIPMENT BOOM: (RMS. 119, 121, 123)
    (2) EMERGENCY DUPLEX RECEPTACLES EACH PER CIRCUIT (4 CIRCUITS)
    (1) EMERGENCY DUPLEX RECEPTACLES EACH PER CIRCUIT (2 CIRCUITS)
    (1) 1 AMP, 120V FOR PNEUMATIC BRAKE
    (1) 20 AMP, 120V FOR MONITOR.
    PROVIDE FLEXIBLE METAL CONDUIT AS REQUIRED FOR STERIS CONNECTION.
33. FOR BARIATRIC LIFT – 120V. COORDINATE EXACT LOCATION WITH ARCHITECTURAL DRAWINGS AND VENDOR SHOP DRAWINGS.
34. FOR UC REFRIGERATOR – 120V.
35. FOR MICROWAVE OVEN – 120V.
36. FOR COFFEE MAKER – 120V.
37. COORDINATE EXACT LOCATION AND POWER REQUIREMENTS WITH ARCHITECTURAL DRAWINGS.
38. FOR AUTOMATIC DOOR OPERATOR – 3.15A, 120V (20A DEDICATED CIRCUIT). CONNECT COMPLETELY PER MANUFACTURER'S REQUIREMENTS. PROVIDE 20A/1-POLE HORSEPOWER RATED DISCONNECT SWITCH.
39. FOR TV – 120V. COORDINATE EXACT LOCATION WITH ARCHITECTURAL DRAWINGS.
40. FOR BTU METER – 120V.
41. FOR ADJUSTABLE COUNTER SINK – 15A, 120V.
42. FOR ULTRASONIC CLEANER – 10A, 120V.
43. FOR ENDOSCOPE STORAGE CABINET – 20A, 120V (DEDICATED). LOCATE RECEPTACLE 6" ABOVE TOP LEFT OF THE CABINET.

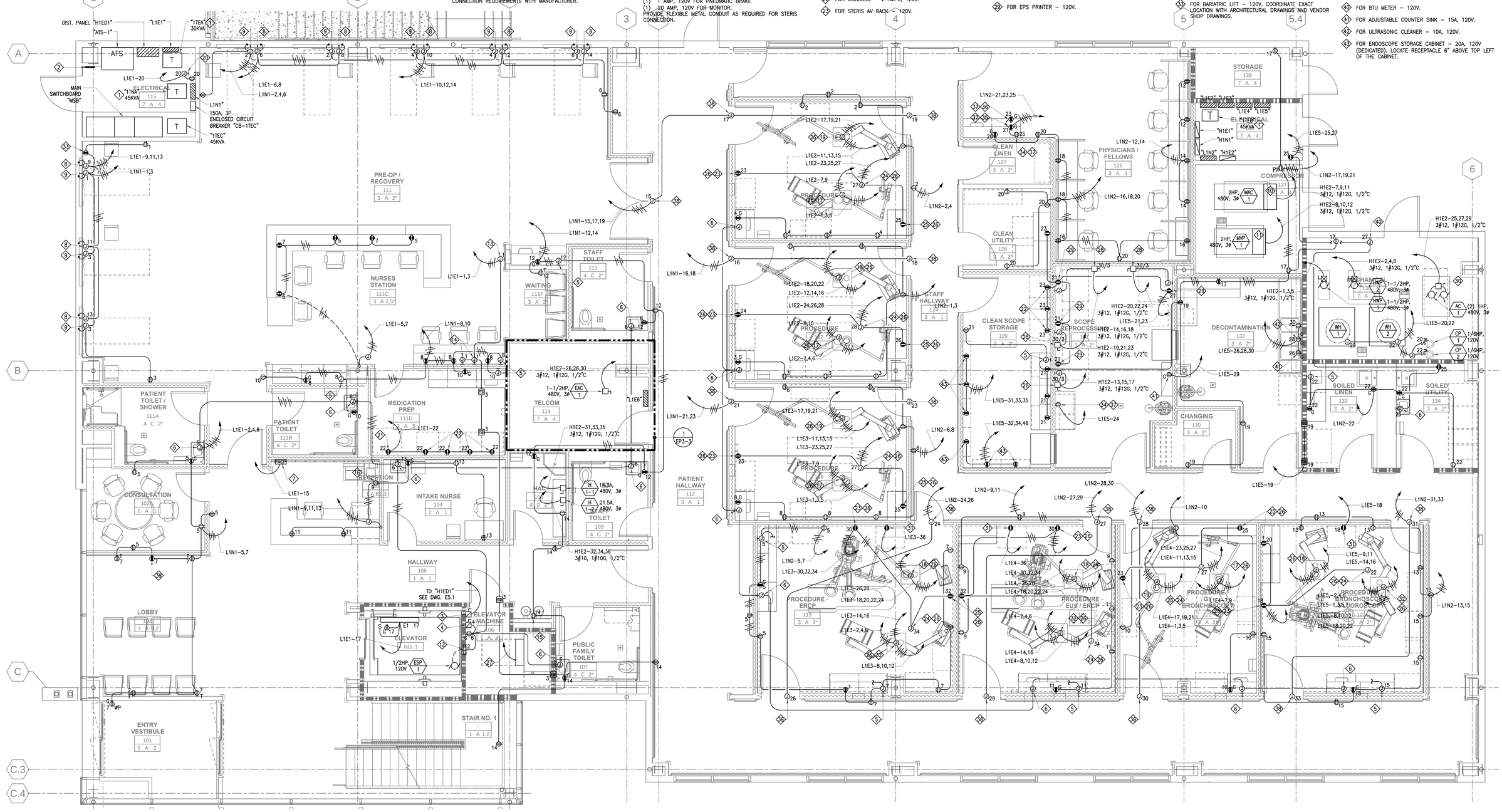

1 FIRST FLOOR POWER PLAN

1/4" = 1'-0"

Issues & Revisions:	Date

CONSULTANTS:

TED JACOB ENGINEERING GROUP
LEADING BY INNOVATION
JOB NO. MEI-001
1763 BROADWAY, OAKLAND, CA 94612-2105
(510) 763-4880 FAX (510) 763-5099

Copyright © 2013 Ted Jacob Engineering Group. All rights reserved. No part of this work may be reproduced, changed, copied or transmitted in any form or by any means, electronic or mechanical, including, but not retrieval system, except as may be expressly permitted in writing from TJEG.

REGISTERED PROFESSIONAL ENGINEER OCTAVIAN J. DRAGOS No.E014431 Exp. 6-30-14 ELECTRICAL STATE OF CALIFORNIA

KEY PLAN

ARCHITECT/ENGINEERS:

MEI architecture + interiors
239 9TH STREET, SUITE 201
SAN FRANCISCO, CA 94103
T (415) 682-7376 F (415) 682-7339
www.meiarchitects.com

Drawing Title: FIRST FLOOR POWER PLAN

Approved: Project Director

Project Title: CONSOLIDATE / EXPAND MEDICAL PROCEDURES MINOR (CEMP)

Location: VANCHCS - MATHER, CA

Date: APRIL 22, 2014 | Checked: JL | Drawn: SU

Project Number: 612-111

Building Number:

Drawing Number: EP3-1

Dwg. -- of --

Office of Facilities Management

Department of Veterans Affairs

VA FORM 08-6231, OCT 1978 04/28/2014 1:36:44 PM

FULLY SPRINKLERED

100% CONSTRUCTION DOCUMENTS

GENERAL NOTES

USE #10 AWG WIRING FOR 120V HOMERUNS LONGER THAN 70 FEET. DERATE CONDUCTORS AS REQUIRED FOR VOLTAGE DROP OF LESS THAN 3 PERCENT.

SHEET NOTES

1. 30KVA TRANSFORMER TO BE CEILING MOUNTED ABOVE PANEL. SEE DETAIL ON SHEET E7-3.
2. (2) 4" CONDUIT SLEEVES FOR FUTURE ROOF INVERTER. CAP FOR FUTURE USE. COORDINATE EXACT LOCATION IN FIELD WITH VA PRIOR TO ROUGH-IN.
3. J-BOX BELOW THE SINK FOR ELECTRONIC SENSOR OPERATED FAUCET – 120V.
5. FOR SPHYGMOMANOMETER/OPHTHALMOSCOPE – 120V.
6. FOR COMPUTER – 120V.
7. FOR ELECTRIC WATER COOLER (P-609) – 5A, 120V.
8. FOR REFRIGERATOR – 120V.
9. FOR COPIER – 120V.
9. FOR AREA ALARM PANEL – 120V. SEE PLUMBING DRAWINGS FOR EXACT LOCATION.
10. FOR HVAC CONTROL MODULE – 120V.
11. J-BOX BELOW WALL CABINET AND EMPTY RACEWAY FOR COUNTER TASK LIGHT.
12. FOR CEILING MOUNTED SCREEN PROJECTOR – 120V. COORDINATE POWER REQUIREMENTS AND EXACT LOCATION WITH ARCHITECTURAL DRAWINGS.
13. FOR BARIATRIC LIFT CHARGING STATION – 120V. COORDINATE EXACT LOCATION WITH ARCHITECTURAL DRAWINGS AND VENDOR SHOP DRAWINGS.
14. FOR STERIS AV RACK – 120V.
15. FOR MICROWAVE OVEN –120V. COORDINATE POWER REQUIREMENTS AND EXACT LOCATION WITH ARCHITECTURAL DRAWING.
16. COORDINATE EXACT LOCATION AND POWER REQUIREMENTS WITH STERIS APPROVED HARMONY INTETRATION SYSTEM SHOP DRAWINGS.
17. FOR STERIS 55" FLAT PANEL MONITOR – 120V.
18. FOR PROJECTION SCREEN – 2.4 AMPS, 120V. CONNECT COMPLETE PROJECTION SWITCH CONTROL. SWITCH CONTROL PROVIDED WITH PROJECTION SCREEN.
19. COORDINATE WITH MECHANICAL DRAWINGS FOR QUANTITY AND EXACT LOCATION.
20. FOR AUTOMATIC DOOR OPERATOR – 3.15A, 120V (20A DEDICATED CIRCUIT). CONNECT COMPLETE PER MANUFACTURER'S REQUIREMENTS. PROVIDE 20A/1-POLE HORSEPOWER RATED DISCONNECT SWITCH.

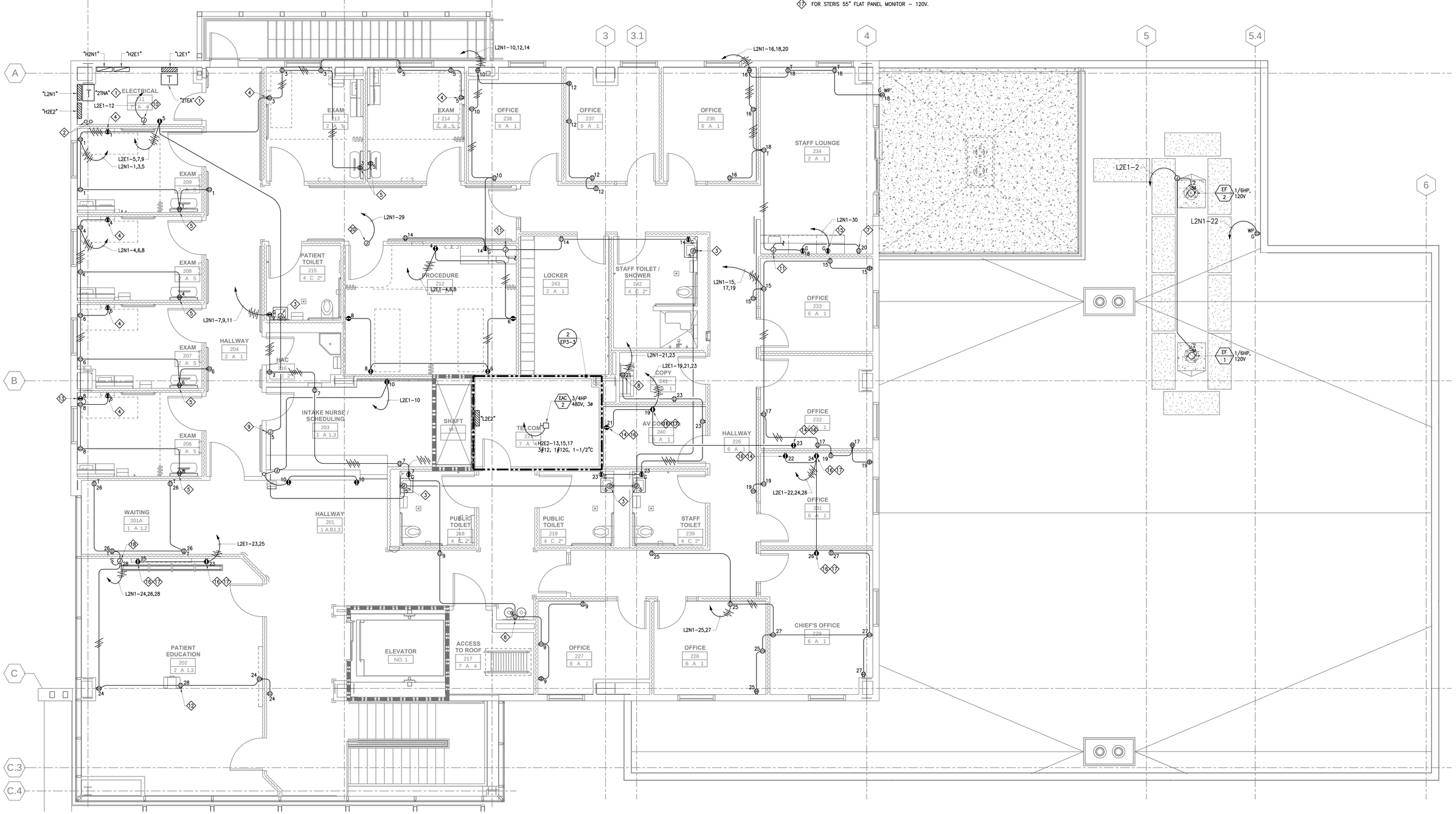

1 SECOND FLOOR POWER PLAN

1/4" = 1'-0"

Issues & Revisions:	Date

CONSULTANTS:

TED JACOB ENGINEERING GROUP
LEADING BY INNOVATION
JOB NO. MEI-001
1763 BROADWAY, OAKLAND, CA 94612-2105
(510) 763-4680 FAX (510) 763-5099

Copyright © 2013 Ted Jacob Engineering Group. All rights reserved. No part of this work may be reproduced, changed, copied or transmitted in any form or by any means, electronic or mechanical, including, but not retrieval system, except as may be expressly permitted in writing from TJEG.

REGISTERED PROFESSIONAL ENGINEER OCTAVIAN J. DRAGOS No.E014431 Exp. 6-30-14 CIVIL STATE OF CALIFORNIA

KEY PLAN

ARCHITECT/ENGINEERS:

MEI architecture + interiors
239 9TH STREET, SUITE 201
SAN FRANCISCO, CA 94103
T (415) 682-7376 F (415) 682-7339
www.mearchitects.com

Drawing Title: **SECOND FLOOR POWER PLAN**

Approved: Project Director

Project Title: **CONSOLIDATE / EXPAND MEDICAL PROCEDURES MINOR (CEMP)**

Location: **VANCHCS - MATHER, CA**

Date: **APRIL 22, 2014** | Checked: **JL** | Drawn: **SU**

Project Number: **612-111**

Building Number:

Drawing Number: **EP3-2** Dwg. -- of --

Office of Facilities Management

Department of Veterans Affairs

VA FORM 08-6231, OCT 1978 04/28/2014 1:37:17 PM

FULLY SPRINKLERED **100% CONSTRUCTION DOCUMENTS**

SHEET NOTES

1. AHU MAIN ELECTRICAL PANEL PROVIDED AS AN INTEGRAL PART OF AHU UNDER DIV. 23. COORDINATE EXACT LOCATION WITH MANUFACTURER.
2. FOR AHU'S INTEGRAL LIGHTS AND RECEPTACLES. ELECTRICAL CONTRACTOR SHALL PROVIDE WIRING AND CONNECTIONS INSIDE THE AHU USING MANUFACTURER'S INSTALLED CONDUITS. COORDINATE WITH AHU MANUFACTURER.
3. FOR HVAC CONTROL. PROVIDE CONDUIT AND WIRE TO ALL CONTROL PANEL INSIDE THE AHU. COORDINATE EXACT LOCATION AND QUANTITY WITH DIV. 23.
4. SF–AHU–1: (4) 9HP, 480V, 3ø.
   EF–AHU–1: (4) 5HP, 480V, 3ø.
   HRP–1: 2HP, 480V, 3ø.
   HRP–2: 2HP, 480V, 3ø.
5. DRY COOLER (DC–1) – (4) 3/4HP, 480V, 3ø WITH INTEGRAL 1HP CIRCULATING PUMP.
6. DRY COOLER (DC–1) CONTROLLER. FOR SINGLE POINT POWER CONNECTION. SEE MECHANICAL DWGS. FOR MORE INFORMATION.
7. CHILLER (CH–1) – 221 AMPS, 480V, 3ø.
8. CHILLER (CH–1) CONTROLLER.
9. REFER TO DWG. E5.1 FOR FEEDER AND OVERCURRENT PROTECTION.
10. FED FROM AHU MAIN ELECT. PANEL, SEE SHEET NOTES 1 & 4.
11. MOUNT ABOVE EACH RACK. COORDINATE EXACT LOCATION WITH IT DRAWINGS.
12. FOR SECURITY SYSTEM (2) 20A, 120V CIRCUITS. COORDINATE EXACT LOCATION WITH SECURITY DRAWINGS.
13. FOR NURSE CALL SYSTEM (2) 20A, 120V CIRCUITS. COORDINATE EXACT LOCATION WITH NURSE CALL SYSTEM DRAWINGS.

GENERAL NOTES

COORDINATE ALL POWER REQUIREMENTS IN THE TELECOM ROOMS WITH VA IT REPRESENTATIVE PRIOR TO ROUGH–IN OF ELECTRICAL WORK.

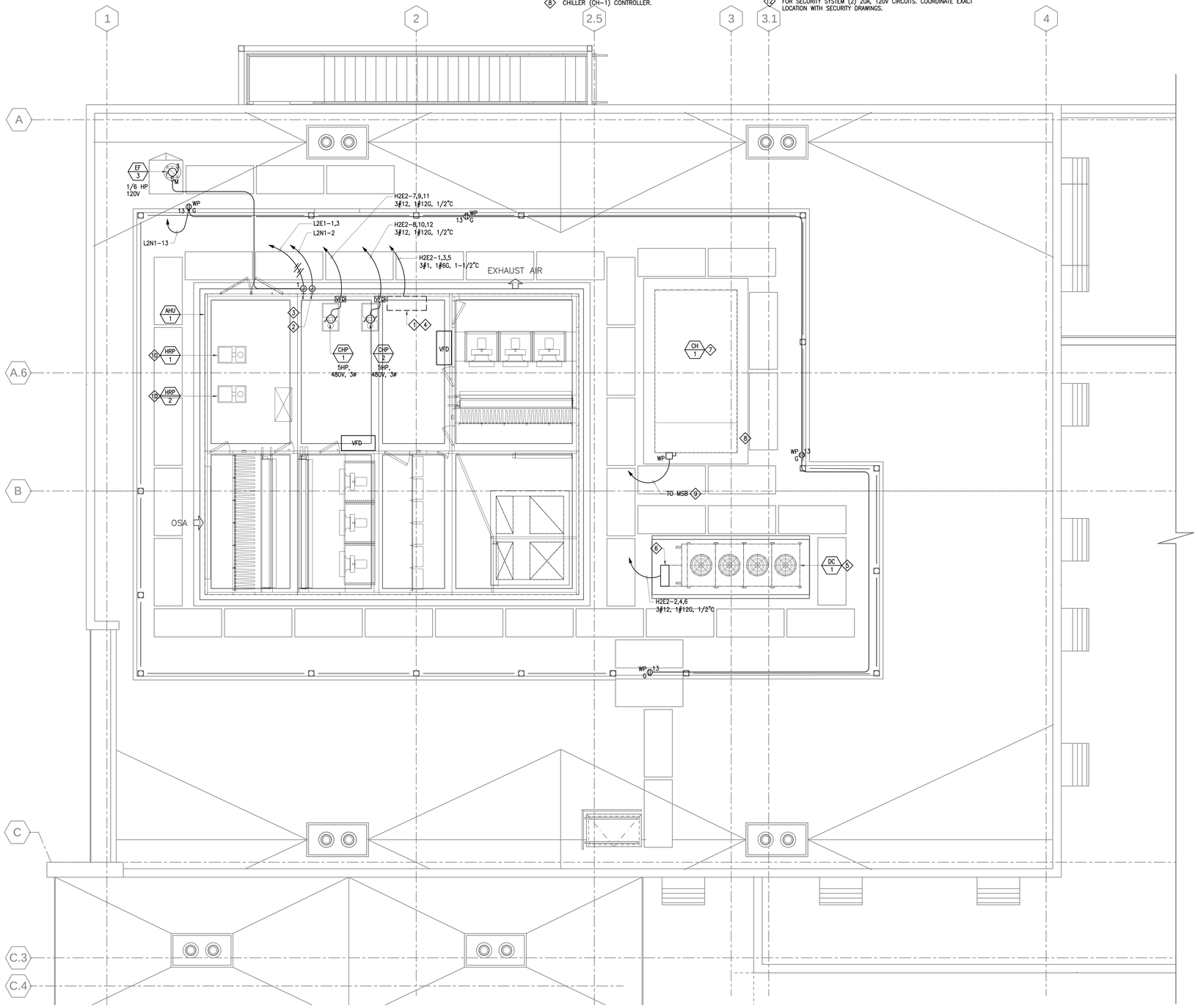

1 ROOF POWER PLAN
1/4" = 1'-0"

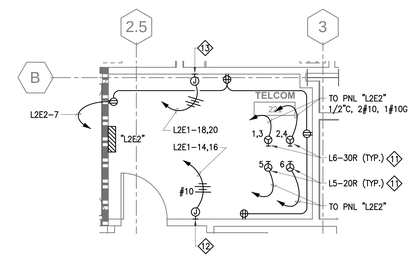

3 PARTIAL 2ND FLOOR PLAN
1/4" = 1'-0"

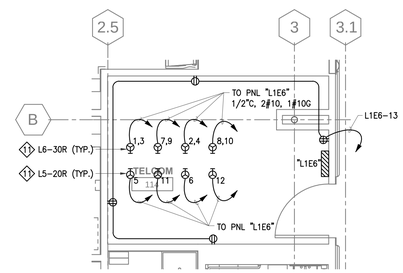

2 PARTIAL 1ST FLOOR PLAN
1/4" = 1'-0"

Issues & Revisions:	Date

CONSULTANTS:

TED JACOB ENGINEERING GROUP
LEADING BY INNOVATION
JOB NO. MEI-001
1763 BROADWAY, OAKLAND, CA 94612–2105
(510) 763–4880 FAX (510) 763–5099

Copyright © 2013 Ted Jacob Engineering Group. All rights reserved. No part of this work may be reproduced, changed, copied or transmitted in any form or by any means, electronic or mechanical, including, but not retrieval system, except as may be expressly permitted in writing from TJEG.

REGISTERED PROFESSIONAL ENGINEER OGNIAN J. DRAGOS No.E014431 Exp. 6–30–14 ELECTRICAL CALIFORNIA

KEY PLAN

ARCHITECT/ENGINEERS:

MEI architecture + interiors
239 9TH STREET, SUITE 201
SAN FRANCISCO, CA 94103
T (415) 662-7376 F (415) 662-7339
www.mearchitects.com

Drawing Title: **ROOF POWER, PARTIAL 1ST FLOOR AND 2ND FLOOR PLANS**

Approved: Project Director

Project Title: **CONSOLIDATE / EXPAND MEDICAL PROCEDURES MINOR (CEMP)**

Location: **VANCHCS - MATHER, CA**

Date: **APRIL 22, 2014** | Checked: **JL** | Drawn: **SU**

Project Number: **612-111**

Building Number:

Drawing Number: **EP3-3**
Dwg. -- of --

Office of Facilities Management
Department of Veterans Affairs

VA FORM 08–6231, OCT 1978 04/28/2014 1:37:55 PM

FULLY SPRINKLERED **100% CONSTRUCTION DOCUMENTS**

GENERAL NOTES

1. ELECTRICAL UNDERGROUND FEEDER CONDUIT PENETRATIONS THROUGH GRADE BEAM SHALL COMPLY WITH STRUCTURAL DETAIL 13/SS3-0. COORDINATE WITH STRUCTURAL DRAWINGS.

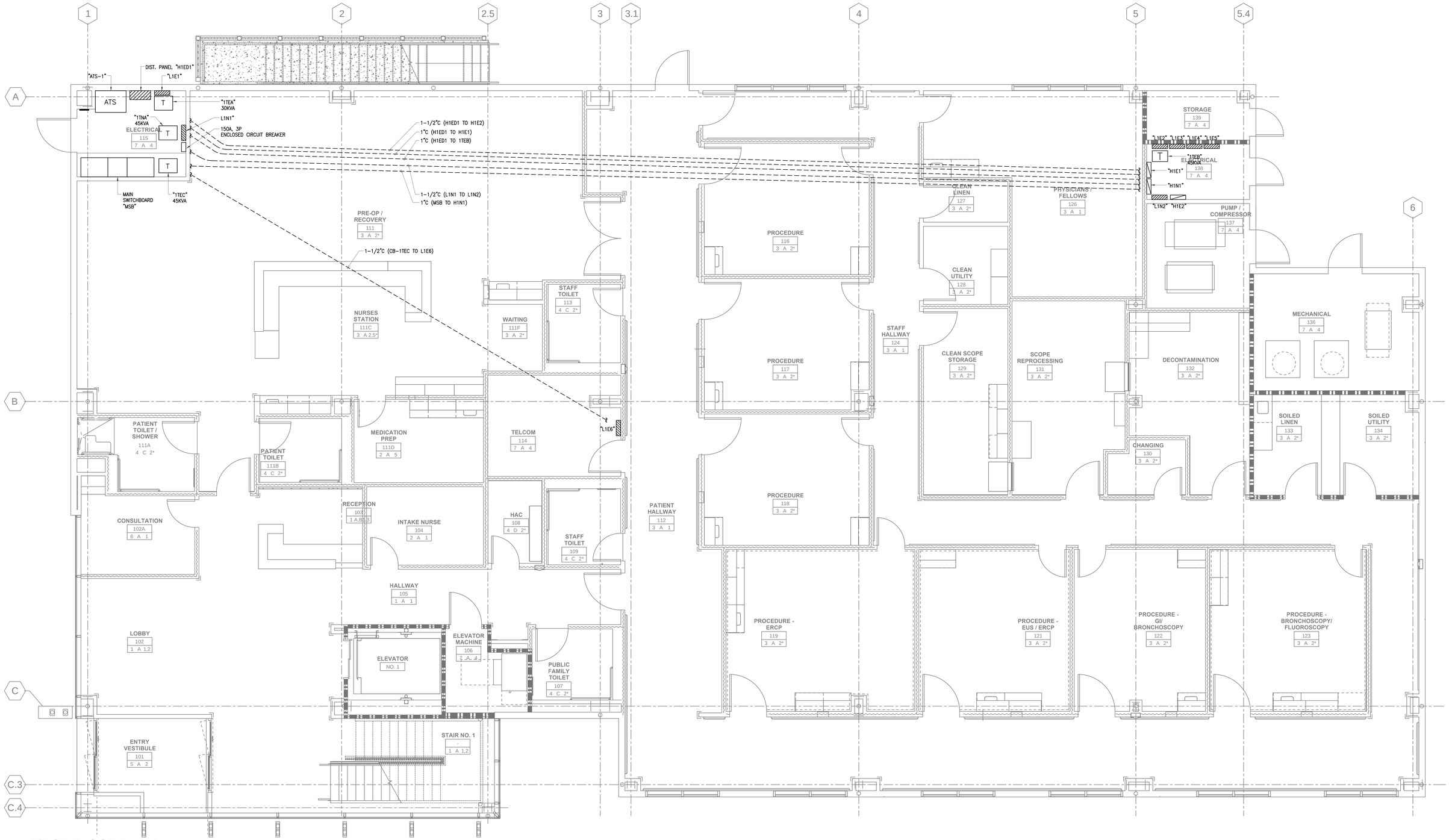

1 FIRST FLOOR PLAN

1/4" = 1'-0"

Issues & Revisions:	Date

CONSULTANTS:

TED JACOB ENGINEERING GROUP
LEADING BY INNOVATION
JOB NO. MEI-001
1763 BROADWAY, OAKLAND, CA 94612-2105
(510) 763-4880 FAX (510) 763-5099

Copyright © 2013 Ted Jacob Engineering Group. All rights reserved. No part of this work may be reproduced, changed, copied or transmitted in any form or by any means, electronic or mechanical, including, but not retrieval system, except as may be expressly permitted in writing from TJEG.

REGISTERED PROFESSIONAL ENGINEER VORNAN J. DRAGOS No.E014431 Exp. 6-30-14 ELECTRICAL STATE OF CALIFORNIA

KEY PLAN

ARCHITECT/ENGINEERS:

MEI architecture + interiors
239 9TH STREET, SUITE 201
SAN FRANCISCO, CA 94103
T (415) 682-7376 F (415) 682-7339
www.meiarchitects.com

Drawing Title: FIRST FLOOR PLAN

Approved: Project Director

Project Title: CONSOLIDATE / EXPAND MEDICAL PROCEDURES MINOR (CEMP)

Location: VANCHCS - MATHER, CA

Date: APRIL 22, 2014 | Checked: JL | Drawn: SU

Project Number: 612-111

Building Number:

Drawing Number: EP4-1

Dwg. – of –

Office of Facilities Management

Department of Veterans Affairs

VA FORM 08-6231, OCT 1978 04/28/2014 1:38:31 PM

FULLY SPRINKLERED

100% CONSTRUCTION DOCUMENTS

SINGLE LINE DIAGRAM NOTES

1. CEMP EMERGENCY POWER SHALL BE PROVIDED FROM NEW EMERGENCY PANEL TO BE PROVIDED UNDER SEPARATE PROJECT DESIGNED BY OTHERS. PANEL LOCATION IS TO BE DETERMINED. COORDINATE WITH VA FOR CEMP POINT OF LOCATION. PANEL SHALL MEET THE FOLLOWING CRITERIA:
   a. PANEL SHALL BE CONNECTED TO A 10-SECOND AUTOMATIC TRANSFER SWITCH.
   b. PANEL SHALL HAVE SUFFICIENT CAPACITY FOR 311.6 KVA EMERGENCY LOAD AT CEMP.
   c. PANEL SHALL HAVE CIRCUIT PROVISION FOR 600A/3P CIRCUIT BREAKER (480/277V).
2. UTILITY PULL-SECTION & METERING COMPARTIMENT. PROVIDE IN ACCORDANCE WITH SMUD UTILITY REQUIREMENT.
3. THE MAIN SERVICE SWBD "MSB" AND ALL ASSOCIATED INSTALLATION SHALL CONFORM TO SMUD UTILITY REQUIREMENT AND OBTAIN APPROVAL FROM SMUD UTILITY.
4. 2"C, PROVIDE ATS RUN/START SIGNAL WIRING IN CONDUIT FROM ATS TO (E) EMERGENCY DISTRIBUTION SWITCHBOARD SECTION TO BE DETERMINED. NUMBER OF WIRES SHALL BE PER MANUFACTURER'S REQUIREMENTS.
5. INDICATED AUTO TRANSFER SWITCH SHALL BE OPEN TRANSITION TYPE.
6. ELEVATOR CONTROLLER PROVIDED BY MANUFACTURER. COORDINATE CONNECTION REQUIREMENT WITH ELEVATOR CONTRACTOR.
7. FUSED DISCONNECT SWITCH SHALL BE SIZED PER THE ELEVATOR MANUFACTURER'S REQUIREMENT.
8. CONNECT ELEVATOR CIRCUIT BREAKER SHUNT TRIP TO THE FIRE ALARM SYSTEM FOR ELEVATOR POWER SHUT DOWN PRIOR TO APPLICATION OF WATER FROM SPRINKLER SYSTEM IN ELEVATOR MACHINE ROOM OR ELEVATOR HOISTWAY. COORDINATE WITH FIRE ALARM VENDOR FOR ELEVATOR RECALL REQUIREMENTS. SEE FIRE ALARM DRAWINGS FOR CONNECTION REQUIREMENTS.
9. PROVIDE CIRCUIT BREAKER TO MATCH EXISTING TYPE AND AIC RATING. FIELD VERIFY SPARE BREAKER LOCATION.
10. DUCT BANK SHALL CONFORM TO SMUD UTILITY REQUIREMENT AND OBTAIN APPROVAL FROM SMUD UTILITY.
11. EMERGENCY FEEDER SIZE AND VOLTAGE DROP SHALL BE VERIFIED UPON DETERMINATION OF POINT OF CONNECTION BY OTHERS.
12. COORDINATE ALL REQUIREMENTS WITH SMUD AND VA FACILITY. SEE SHEET ES1-1.
13. 1" CONDUIT FOR PRE-TRANSFER SIGNAL TO ELEVATOR CONTROLLER IN ELEVATOR MACHINE ROOM.
14. CONNECT METER TO CAMPUS CONTROL SYSTEM. METER SHALL MATCH CAMPUS METERING SYSTEM. SEE 251010 ADVANCED UTILITY METERING SYSTEM SPECIFICATION. COORDINATE WITH VA FACILITY FOR EXACT REQUIREMENTS AND CONNECTION POINTS. PROVIDE RACEWAY AS REQUIRED.

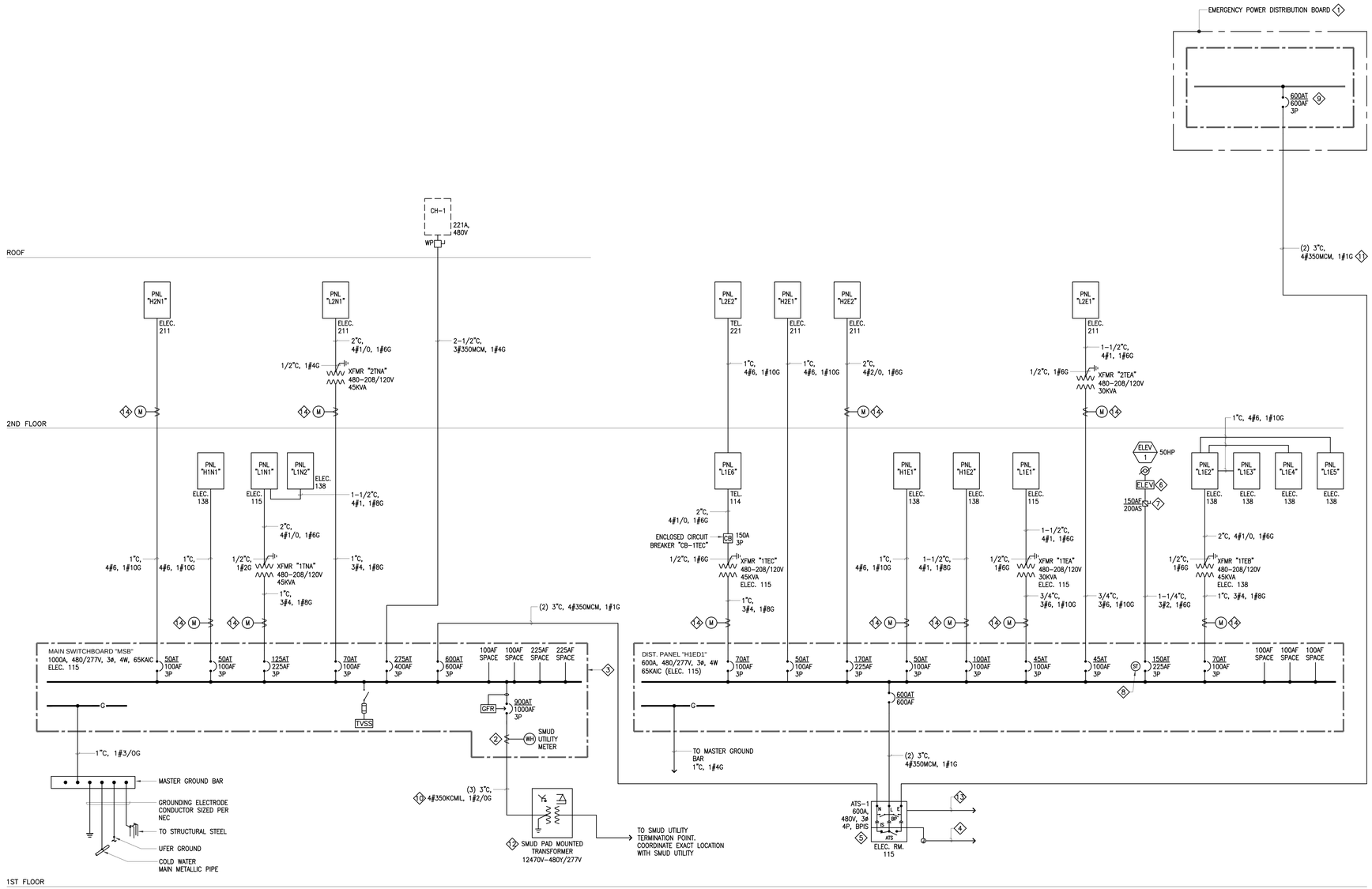

1 SINGLE LINE DIAGRAM

NOT TO SCALE

GENERAL NOTES

1. ALL GROUNDING WIRING ABOVE GRADE SHALL BE INSTALLED IN CONDUIT. ALL EXPOSED CONDUITS SHALL BE METALLIC CONDUIT. BONDED AT BOTH ENDS OR MAY BE PVC SCH 40 CONDUIT, SIZED PER NEC. REFERENCE SPECIFICATION FOR ADDITIONAL GROUNDING DETAIL.

GROUNDING RISER DIAGRAM NOTES

1. INTERIOR WATER PIPE CONNECTION PER NEC 250.104 (A). INSTALL METER JUMPER AT MAIN. MAIN CONNECTION FROM MGB TO BE WITHIN 5' OF MAIN WATER PIPE ENTERING FACILITY.
2. OTHER INTERIOR PIPE SYSTEMS CONNECTION PER NEC 250.52 (A) & (B).
3. PROVIDE CONNECTION TO ELECTRICAL GROUND BUS PER NEC 250.30.
4. ELECTRICAL GROUND BUS LOCATED IN ELECTRICAL CLOSETS ON EACH FLOOR AS INDICATED.
5. BUILDING VERTICAL STEEL COLUMN CONNECTION PER NEC 250.104 (C). AND TIA/EIA 607.
6. BOND THE BUILDING STEEL TO EXISTING BUILDING STEEL AT EACH INTERFACE. PROVIDE ACCESSIBILITY FOR AHJ INSPECTION. EACH BOND FROM BUILDING TO BUILDING BUS BAR SHALL BE IDENTIFIED AT BOTH ENDS FOR AHJ INSPECTION.
7. TO TELECOMMUNICATIONS GROUNDING. COORDINATE WITH TELECOM DRAWINGS.

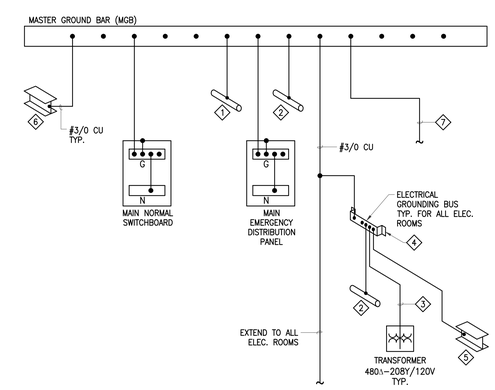

2 GROUNDING RISER DIAGRAM

NOT TO SCALE

Issues & Revisions:	Date

CONSULTANTS:

TED JACOB ENGINEERING GROUP
LEADING BY INNOVATION
JOB NO. MEI-001
1763 BROADWAY, OAKLAND, CA 94612-2105
(510) 763-4880 FAX (510) 763-5099

Copyright © 2013 Ted Jacob Engineering Group. All rights reserved. No part of this work may be reproduced, changed, copied or transmitted in any form or by any means, electronic or mechanical, including, but not retrieval system, except as may be expressly permitted in writing from TJEG.

REGISTERED PROFESSIONAL ENGINEER OTTMAN J. BRAZOS No.E014431 Exp. 6-30-14 ELECTRICAL CALIFORNIA

KEY PLAN

ARCHITECT/ENGINEERS:

MEI architecture + interiors
239 9TH STREET, SUITE 201
SAN FRANCISCO, CA 94103
T (415) 682-7378 F (415) 682-7339
www.mearchitects.com

Drawing Title: **SINGLE LINE DIAGRAM**

Approved: Project Director

Project Title: **CONSOLIDATE / EXPAND MEDICAL PROCEDURES MINOR (CEMP)**

Location: **VANCHCS - MATHER, CA**

Date: **APRIL 22, 2014** | Checked: **JL** | Drawn: **SU**

Project Number: **612-111**

Building Number:

Drawing Number: **E5-1** Dwg. -- of --

Office of Facilities Management

Department of Veterans Affairs

VA FORM 08-6231, OCT 1978 04/28/2014 1:38:58 PM

FULLY SPRINKLERED **100% CONSTRUCTION DOCUMENTS**

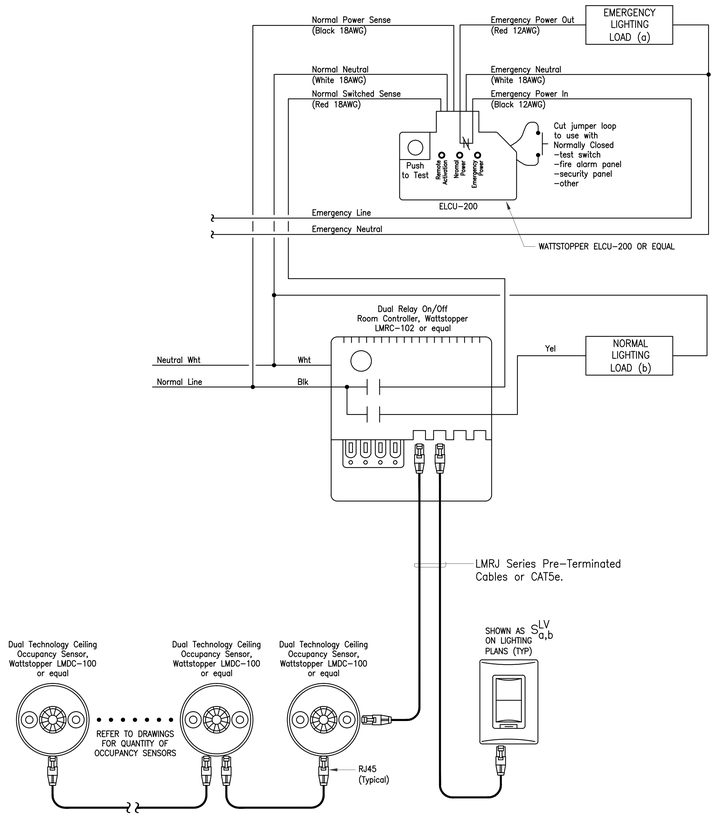

WATTSTOPPER DLM DEVICES ARE PRESET FOR PLUG n' GO™ DEFAULT OPERATION; CUSTOM CONFIGURE AS FOLLOWS:
Sequence of Operation: Configure both Load (a) Emergency fixtures and Load (b) Normal fixtures to automatic–on/automatic–off operation. Upon loss of normal power, the ELCU–200 will bypass the Room Controller and force the Load (a) Emergency fixtures On.

1 LIGHTING CONTROL DIAGRAM - CORRIDOR OPERATION
NOT TO SCALE

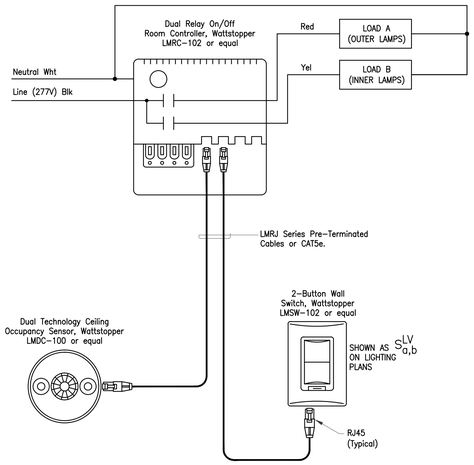

WATTSTOPPER DLM DEVICES ARE PRESET FOR PLUG n' GO™ DEFAULT OPERATION;
Sequence of Operation: In this configuration the LMRC–102 defaults to multi–level automatic–on/automatic–off operation. In the Typical Surgical Treatment Room. Load (a) on the LMRC–102 turns on automatically, while Load (b) defaults to manual–on control; all relays turn off automatically. In the Cast Room, both Loads (a) and (b) on the LMRC–102 default to manual–on control; all relays turn off automatically.

2 LIGHTING CONTROL DIAGRAM - TYPICAL INTERIOR ENCLOSED ROOM - BI-LEVEL SWITCHING
NOT TO SCALE

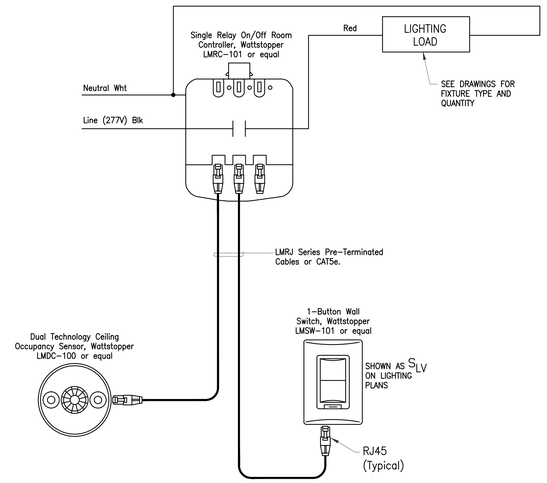

WATTSTOPPER DLM DEVICES ARE PRESET FOR PLUG n' GO™ DEFAULT OPERATION; CUSTOM CONFITURE AS FOLLOWS:
Sequence of Operation: In this configuration the LMRC–101 defaults to manual–on/automatic–off operation. Configuration the LMRC–100 to automatic–on/automatic–off operation.

3 LIGHTING CONTROL DIAGRAM - TYPICAL INTERIOR ENCLOSED ROOM
NOT TO SCALE

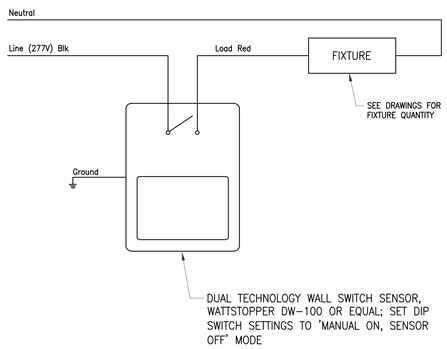

4 LIGHTING CONTROL DIAGRAM - TYPICAL PERIMETER OFFICE & NON-PUBLIC TOILET OR INTERIOR ROOM
NOT TO SCALE

Issues & Revisions:	Date

CONSULTANTS:

TED JACOB ENGINEERING GROUP
LEADING BY INNOVATION
JOB NO. MEI-001
1763 BROADWAY, OAKLAND, CA 94612–2105
(510) 763–4880 FAX (510) 763–5099

Copyright © 2013 Ted Jacob Engineering Group. All rights reserved. No part of this work may be reproduced, changed, copied or transmitted in any form or by any means, electronic or mechanical, including, but not retrieval system, except as may be expressly permitted in writing from TJEG.

REGISTERED PROFESSIONAL ENGINEER OCTAVIAN J. DRAGOS No.E014431 Exp. 6–30–14 CIVIL STATE OF CALIFORNIA

KEY PLAN

ARCHITECT/ENGINEERS:

MEI architecture + interiors
239 9TH STREET, SUITE 201
SAN FRANCISCO, CA 94103
T (415) 682-7376 F (415) 682-7339
www.meiarchitects.com

Drawing Title: **LIGHTING CONTROL DIAGRAMS**
Approved: Project Director
Project Title: **CONSOLIDATE / EXPAND MEDICAL PROCEDURES MINOR (CEMP)**
Location: **VANCHCS - MATHER, CA**
Date: **APRIL 22, 2014** | Checked: **JL** | Drawn: **SU**
Project Number: **612-111**
Building Number:
Drawing Number: **E5-2** Dwg. -- of --

Office of Facilities Management
Department of Veterans Affairs

VA FORM 08–6231, OCT 1978 04/28/2014 1:39:26 PM

FULLY SPRINKLERED **100% CONSTRUCTION DOCUMENTS**

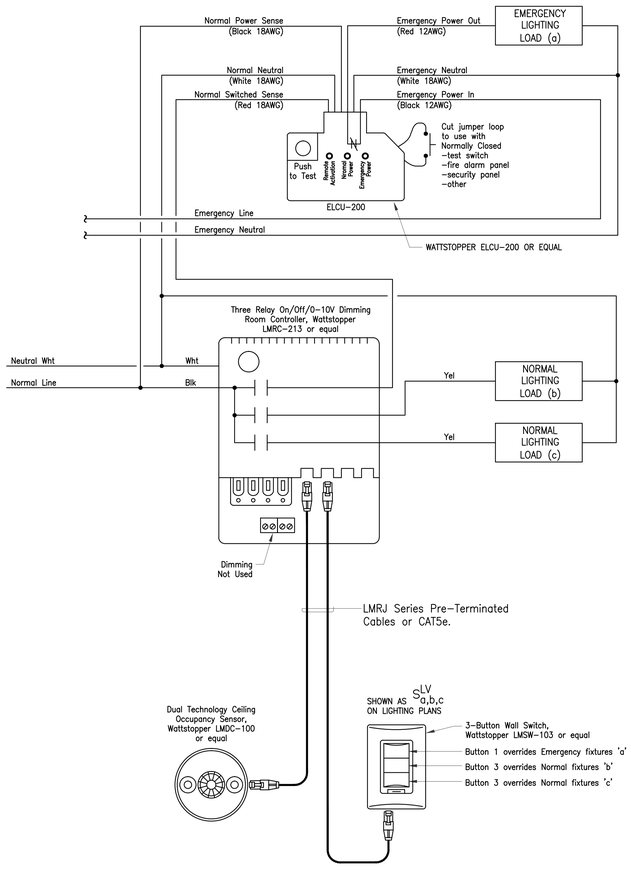

WATTSTOPPER DLM DEVICES ARE PRESET FOR PLUG n' GO™ DEFAULT OPERATION;
CUSTOM CONFIGURE AS FOLLOWS:
Sequence of Operation: Configure Load (a) Emergency fixtures to automatic–on/automatic–off operation, and Loads (b) and (c) Normal fixtures to manual–on/automatic–off operation. Upon loss of normal power, the ELCU–200 will bypass the Room Controller and force the Load (a) Emergency fixtures ON.

1 LIGHTING CONTROL DIAGRAM - TYPICAL RECEPTION AREA / CONFERENCE RM.
NOT TO SCALE

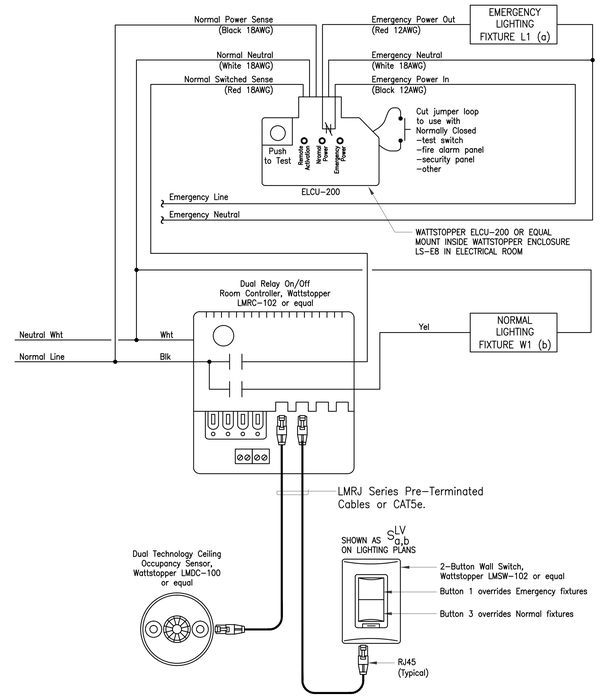

WATTSTOPPER DLM DEVICES ARE PRESET FOR PLUG n' GO™ DEFAULT OPERATION;
Sequence of Operation: In this configuration the LMRC™102 defaults to multi–level automatic–on/automatic–off operation. Load (a) on the LMRC–102 turns on automatically, while Load (b) defaults to manual–on control; all relays turn off automatically. Upon loss of normal power, ELCU–200 will bypass the Room Controller and force the Load (a) Emergency fixtures ON.

2 LIGHTING CONTROL DIAGRAM - TYPICAL FOR MEDICATION PREP., SCOPE REPROCESSING, EXAM RM. & PUBLIC TOILET
NOT TO SCALE

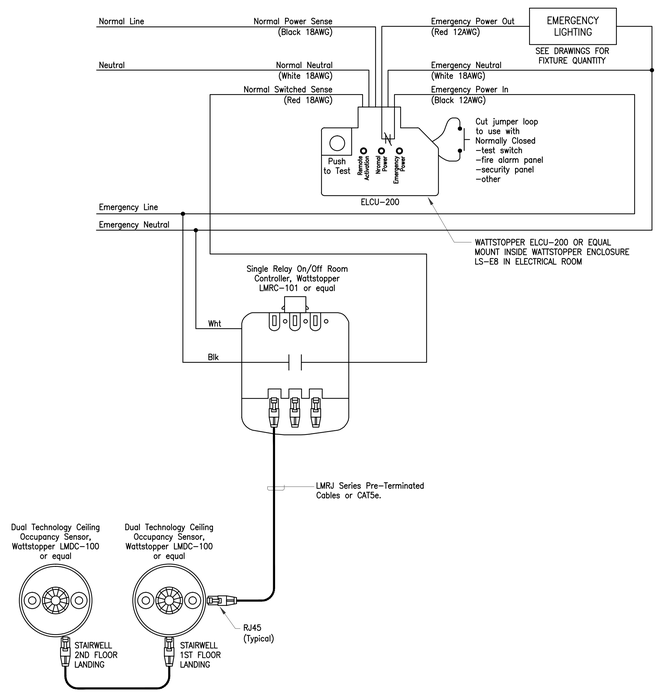

WATTSTOPPER DLM DEVICES ARE PRESET FOR PLUG n' GO™ DEFAULT OPERATION;
CUSTOM CONFITURE AS FOLLOWS:
Sequence of Operation: Configure Stairwell fixtures automatic–on/automatic–off operation. Upon loss of normal power, the ELCU–200 will bypass the Room Controller and force Stairwell fixtures ON.

3 LIGHTING CONTROL DIAGRAM - TYPICAL STAIRWELL
NOT TO SCALE

Issues & Revisions:	Date

CONSULTANTS:

TED JACOB ENGINEERING GROUP
LEADING BY INNOVATION
JOB NO. MEI-001
1763 BROADWAY, OAKLAND, CA 94612–2105
(510) 763–4880 FAX (510) 763–5099

Copyright © 2013 Ted Jacob Engineering Group. All rights reserved. No part of this work may be reproduced, changed, copied or transmitted in any form or by any means, electronic or mechanical, including, but not retrieval system, except as may be expressly permitted in writing from TJEG.

REGISTERED PROFESSIONAL ENGINEER
OGHMAN J. DRAGOS
No.E014431
Exp. 6–30–14
ELECTRICAL
CALIFORNIA

KEY PLAN

ARCHITECT/ENGINEERS:

MEI architecture + interiors
239 9TH STREET, SUITE 201
SAN FRANCISCO, CA 94103
T (415) 662-7376 F (415) 662-7339
www.mearchitects.com

Drawing Title: **LIGHTING CONTROL DIAGRAMS**

Approved: Project Director

Project Title: **CONSOLIDATE / EXPAND MEDICAL PROCEDURES MINOR (CEMP)**

Location: **VANCHCS - MATHER, CA**

Date: **APRIL 22, 2014** | Checked: **JL** | Drawn: **SU**

Project Number: **612-111**

Building Number:

Drawing Number: **E5-3**
Dwg. -- of --

Office of Facilities Management
Department of Veterans Affairs

VA FORM 08–6231, OCT 1978 04/28/2014 1:39:50 PM

FULLY SPRINKLERED **100% CONSTRUCTION DOCUMENTS**

PANEL: MSB
LOCATION: ELECT RM 115
FED FROM: _SMUD

OC DEVICE TYPE: Breaker
DEVICE FAMILY: Bolt On

ENCLOSURE: NEMA 1
MOUNTING: Free Standing
VOLTAGE: 480/277

MAINS(A): 900A
WIRING: 3-Phase 4-Wire

CONTINUOUS(A): 1000
BUS SC RATING(A) 65000
FAULT CURRENT(A): 0

CUBICLE NO	DESCRIPTION	CONNECTED kVA	DEMAND kVA	DESIGN kVA	DESIGN AVE AMPS	OC DEVICE TYPE	OC DEVICE SIZE	P	NOTES
1	_H1N1	6.11	6.11	7.64	9.19	BKR	100	3	PANEL H1N1
2	_H2N1	4.17	4.17	5.21	6.27	BKR	50	3	PANEL H2N1
3	_1TNA	36.77	28.73	28.73	34.56	BKR	125	3	XMER 1TNA
4	_2TNA	22.98	19.19	19.29	23.20	BKR	70	3	XMER 2TNA
5	_ATS-N	320.85	296.77	311.61	374.80	BKR	400	3	ATS-1
6	_CH-1	230.00	230.00	287.50	345.81	BKR	275	3	CH-1
7	SPACE	0.00	0.00	0.00	0.00		0	3	
8	SPACE	0.00	0.00	0.00	0.00		0	3	
9	SPACE	0.00	0.00	0.00	0.00		0	3	
10	SPACE	0.00	0.00	0.00	0.00		0	3	
11	SPACE	0.00	0.00	0.00	0.00		0	3	
12	SPACE	0.00	0.00	0.00	0.00		0	3	
13	SPACE	0.00	0.00	0.00	0.00		0	3	
14	SPACE	0.00	0.00	0.00	0.00		0	3	

ALL CONNECTED	KVA	3P AVE AMPS	* PHASE TOTALS	VA	AMPS	BUS TOTALS	KVA	
TOTAL CONNECTED	618.48	743.9	* A-N	206159.5	743.9	CONNECTED	618.48	DATE: Apr 25, 2014
TOTAL DEMAND	573.33	689.6	* B-N	206159.5	743.9	DEMAND	573.33	TIME: 16:23:02
TOTAL DESIGN	635.63	764.5	* C-N	206159.5	743.9	DESIGN	635.63	

PANEL: H1N1
LOCATION: ELECT RM 138
FED FROM: _MSB

OC DEVICE TYPE: Breaker
DEVICE FAMILY: Bolt On

ENCLOSURE: NEMA 1
MOUNTING: Surface
VOLTAGE: 480/277

MAINS(A): 50
WIRING: 3-Phase 4-Wire

CONTINUOUS(A): 100
BUS SC RATING(A) 14000
FAULT CURRENT(A): 0

CKT	DESCRIPTION	NOTES	DEMAND CODE	VA	OC AMPS	P	PHASE	OC AMPS	P	VA	DEMAND CODE	NOTES	DESCRIPTION	CKT
1	LIGHTING		LTS	1152	20	1	A	20	1	1780	LTS		LIGHTING	2
3	SPARE		SPARE	0	20	1	B	20	1	1702	LTS		LIGHTING	4
5	SPARE		SPARE	0	20	1	C	20	1	1476	LTS		LIGHTING	6
7	SPARE		SPARE	0	20	1	A	20	1	0	SPARE		SPARE	8
9	SPARE		SPARE	0	20	1	B	20	1	0	SPARE		SPARE	10
11	SPARE		SPARE	0	20	1	C	20	1	0	SPARE		SPARE	12
13	SPACE		SPACE	0	0	1	A	0	1	0	SPACE		SPACE	14
15	SPACE		SPACE	0	0	1	B	0	1	0	SPACE		SPACE	16
17	SPACE		SPACE	0	0	1	C	0	1	0	SPACE		SPACE	18
19	SPACE		SPACE	0	0	1	A	0	1	0	SPACE		SPACE	20
21	SPACE		SPACE	0	0	1	B	0	1	0	SPACE		SPACE	22
23	SPACE		SPACE	0	0	1	C	0	1	0	SPACE		SPACE	24
25	SPACE		SPACE	0	0	1	A	0	1	0	SPACE		SPACE	26
27	SPACE		SPACE	0	0	1	B	0	1	0	SPACE		SPACE	28
29	SPACE		SPACE	0	0	1	C	0	1	0	SPACE		SPACE	30

ALL CONNECTED	KVA	3P AVE AMPS	* PHASE TOTALS	VA	AMPS	BUS TOTALS	KVA	
TOTAL CONNECTED	6.11	7.3	* A-N	2932.0	10.6	CONNECTED	6.11	DATE: Apr 25, 2014
TOTAL DEMAND	6.11	7.3	* B-N	1702.0	6.1	DEMAND	6.11	TIME: 16:23:02
TOTAL DESIGN	7.64	9.2	* C-N	1476.0	5.3	DESIGN	7.64	

PANEL: L1E2
LOCATION: ELECT RM 138
FED FROM:

OC DEVICE TYPE: Breaker
DEVICE FAMILY: Bolt On

ENCLOSURE: NEMA 1
MOUNTING: Surface
VOLTAGE: 208/120

MAINS(A): 150
WIRING: 3-Phase 4-Wire

CONTINUOUS(A): 225
BUS SC RATING(A) 10000
FAULT CURRENT(A): 0

CKT	DESCRIPTION	NOTES	DEMAND CODE	VA	OC AMPS	P	PHASE	OC AMPS	P	VA	DEMAND CODE	NOTES	DESCRIPTION	CKT
1	RECEPTACLES	116 EQUIP BOOM	REC	360	20	1	A	20	1	360	REC	117 EQUIP BOOM	RECEPTACLES	2
3	RECEPTACLES	116 EQUIP BOOM	REC	360	20	1	B	20	1	360	REC	117 EQUIP BOOM	RECEPTACLES	4
5	RECEPTACLES	116 EQUIP BOOM	REC	360	20	1	C	20	1	360	REC	117 EQUIP BOOM	RECEPTACLES	6
7	PNEUMATIC BRAKE	116 EQUIP BOOM	GEN	120	20	1	A	20	1	120	GEN	117 EQUIP BOOM	PNEUMATIC BRAKE	8
9	MONITOR	116 EQUIP BOOM	GEN	150	20	1	B	20	1	150	GEN	117 EQUIP BOOM	MONITOR	10
11	RECEPTACLES	116 DOC BOOM	REC	360	20	1	C	20	1	360	REC	117 DOC BOOM	RECEPTACLES	12
13	RECEPTACLES	116 DOC BOOM	REC	360	20	1	A	20	1	360	REC	117 DOC BOOM	RECEPTACLES	14
15	RECEPTACLE	116 DOC BOOM	REC	180	20	1	B	20	1	180	REC	117 DOC BOOM	RECEPTACLE	16
17	PNEUMATIC BRAKE	116 DOC BOOM	GEN	120	20	1	C	20	1	120	GEN	117 DOC BOOM	PNEUMATIC BRAKE	18
19	MONITOR	116 DOC BOOM	GEN	150	20	1	A	20	1	150	GEN	117 DOC BOOM	MONITOR	20
21	MONITOR	116 DOC BOOM	GEN	150	20	1	B	20	1	150	GEN	117 DOC BOOM	MONITOR	22
23	STERIS AV RACK	116	GEN	200	20	1	C	20	1	200	GEN	117	STERIS AV RACK	24
25	STERIS TOUCH PNL	116	GEN	150	20	1	A	20	1	150	GEN	117	STERIS TOUCH PNL	26
27	STERIS CAMERA	116	GEN	100	20	1	B	20	1	100	GEN	117	STERIS CAMERA	28
29	SPARE		SPARE	0	20	1	C	20	1	0	SPARE		SPARE	30
31	SPARE		SPARE	0	20	1	A	50	3	7565	NONE	PANEL L1E5	_L1E5	32
33	SPARE		SPARE	0	20	1	B	""		7565			""	34
35	SPARE		SPARE	0	20	1	C	""		7565			""	36
37	_L1E3	PANEL L1E3	NONE	2385	50	3	A	50	3	2385	NONE	PANEL L1E4	_L1E4	38
39	""			2385	""		B	""		2385			""	40
41	""			2385	""		C	""		2385			""	42

ALL CONNECTED	KVA	3P AVE AMPS	* PHASE TOTALS	VA	AMPS	BUS TOTALS	KVA	
TOTAL CONNECTED	43.21	119.9	* A-N	14601.8	121.6	CONNECTED	43.21	DATE: Apr 25, 2014
TOTAL DEMAND	39.04	108.4	* B-N	14203.1	118.3	DEMAND	39.04	TIME: 16:23:02
TOTAL DESIGN	39.04	108.4	* C-N	14402.1	119.9	DESIGN	39.04	

PANEL: H1ED1
LOCATION: ELECT RM 115
FED FROM: _ATS-1

OC DEVICE TYPE: Breaker
DEVICE FAMILY: Bolt On

ENCLOSURE: NEMA 1
MOUNTING: Free Standing
VOLTAGE: 480/277

MAINS(A): 600
WIRING: 3-Phase 4-Wire

CONTINUOUS(A): 600
BUS SC RATING(A) 65000
FAULT CURRENT(A): 0

CUBICLE NO	DESCRIPTION	CONNECTED kVA	DEMAND kVA	DESIGN kVA	DESIGN AVE AMPS	OC DEVICE TYPE	OC DEVICE SIZE	P	NOTES
1	_H1E1	6.36	6.36	7.95	9.56	BKR	50	3	PANEL H1E1
2	_H2E1	2.90	2.90	3.62	4.36	BKR	50	3	PANEL H2E1
3	_1TEA	9.47	9.47	9.57	11.51	BKR	45	3	XMER 1TEA
4	_2TEA	15.46	15.46	15.46	18.59	BKR	45	3	XMER 2TEA
5	_H2E2	104.41	104.41	104.41	125.59	BKR	170	3	PANEL H2E2
6	_ELEV-1	50.13	50.13	62.67	75.38	BKR	150	3	ELEV-1
7	_1TEB	43.21	39.04	39.04	46.96	BKR	70	3	TRANSF 1TEB
8	_1TEC	28.44	19.22	19.22	23.12	BKR	70	3	TRANSF 1TEC
9	_H1E2	63.07	63.07	63.07	75.86	BKR	100	3	PANEL H1E2
10	SPACE	0.00	0.00	0.00	0.00		0	3	
11	SPACE	0.00	0.00	0.00	0.00		0	3	
12	SPACE	0.00	0.00	0.00	0.00		0	3	
13	SPACE	0.00	0.00	0.00	0.00		0	3	
14	SPACE	0.00	0.00	0.00	0.00		0	3	

ALL CONNECTED	KVA	3P AVE AMPS	* PHASE TOTALS	VA	AMPS	BUS TOTALS	KVA	
TOTAL CONNECTED	320.85	385.9	* A-N	106951.2	385.9	CONNECTED	320.85	DATE: Apr 25, 2014
TOTAL DEMAND	296.77	357.0	* B-N	106951.2	385.9	DEMAND	296.77	TIME: 16:23:02
TOTAL DESIGN	311.61	374.8	* C-N	106951.2	385.9	DESIGN	311.61	

PANEL: L1N1
LOCATION: ELECT RM 115
FED FROM: _1TNA SEC

OC DEVICE TYPE: Breaker
DEVICE FAMILY: Bolt On

ENCLOSURE: NEMA 1
MOUNTING: Surface
VOLTAGE: 208/120

MAINS(A): 150
WIRING: 3-Phase 4-Wire

CONTINUOUS(A): 225
BUS SC RATING(A) 10000
FAULT CURRENT(A): 0

CKT	DESCRIPTION	NOTES	DEMAND CODE	VA	OC AMPS	P	PHASE	OC AMPS	P	VA	DEMAND CODE	NOTES	DESCRIPTION	CKT
1	HEADWALL UNIT	111	REC	540	20	1	A	20	1	900	REC	111	HEADWALL UNIT	2
3	HEADWALL UNIT	111	REC	900	20	1	B	20	1	720	REC	111	HEADWALL UNIT	4
5	RECEPTACLES	102A,111A	REC	900	20	1	C	20	1	720	REC	111	HEADWALL UNIT	6
7	RECEPTACLES	102	REC	720	20	1	A	20	1	720	REC	111C	RECEPTACLES	8
9	COPIER	103	GEN	1080	20	1	B	20	1	540	REC	111D	RECEPTACLES	10
11	RECEPTACLES	103	REC	720	20	1	C	20	1	720	REC	111-113	RECEPTACLES 108,109	12
13	RECEPTACLES	104	REC	720	20	1	A	20	1	720	REC	105-108	RECEPTACLES	14
15	AUTO DR OPERATOR	111	GEN	378	20	1	B	20	1	378	GEN	117	AUTO DR OPERATOR	16
17	AUTO DR OPERATOR	116	GEN	378	20	1	C	20	1	378	GEN	117	AUTO DR OPERATOR	18
19	AUTO DR OPERATOR	116	GEN	378	20	1	A	20	1	0	SPARE		SPARE	20
21	AUTO DR OPERATOR	118	GEN	378	20	1	B	20	1	0	SPARE		SPARE	22
23	AUTO DR OPERATOR	118	GEN	378	20	1	C	20	1	0	SPARE		SPARE	24
25	SPARE		SPARE	0	20	1	A	20	1	0	SPARE		SPARE	26
27	SPARE		SPARE	0	20	1	B	20	1	0	SPARE		SPARE	28
29	SPARE		SPARE	0	20	1	C	20	1	0	SPARE		SPARE	30
31	SPARE		SPARE	0	20	1	A	20	1	0	SPARE		SPARE	32
33	SPARE		SPARE	0	20	1	B	20	1	0	SPARE		SPARE	34
35	SPARE		SPARE	0	20	1	C	20	1	0	SPARE		SPARE	36
37	SPACE		SPACE	0	0	1	A	100	3	7844	NONE	PANEL L1N2	_L1N2	38
39	SPACE		SPACE	0	0	1	B	""		7844			""	40
41	SPACE		SPACE	0	0	1	C	""		7844			""	42

ALL CONNECTED	KVA	3P AVE AMPS	* PHASE TOTALS	VA	AMPS	BUS TOTALS	KVA	
TOTAL CONNECTED	36.77	102.1	* A-N	12537.7	104.4	CONNECTED	36.77	DATE: Apr 25, 2014
TOTAL DEMAND	28.73	79.8	* B-N	12207.2	101.7	DEMAND	28.73	TIME: 16:23:02
TOTAL DESIGN	28.73	79.8	* C-N	12030.7	100.2	DESIGN	28.73	

PANEL: L1E3
LOCATION: ELECT RM 138
FED FROM: _L1E2

OC DEVICE TYPE: Breaker
DEVICE FAMILY: Bolt On

ENCLOSURE: NEMA 1
MOUNTING: Surface
VOLTAGE: 208/120

MAINS(A): MLO
WIRING: 3-Phase 4-Wire

CONTINUOUS(A): 100
BUS SC RATING(A) 10000
FAULT CURRENT(A): 0

CKT	DESCRIPTION	NOTES	DEMAND CODE	VA	OC AMPS	P	PHASE	OC AMPS	P	VA	DEMAND CODE	NOTES	DESCRIPTION	CKT
1	RECEPTACLES	118 EQUIP BOOM	REC	360	20	1	A	20	1	180	REC	119 EQUIP BOOM	RECEPTACLE	2
3	RECEPTACLES	118 EQUIP BOOM	REC	360	20	1	B	20	1	360	REC	119 EQUIP BOOM	RECEPTACLES	4
5	RECEPTACLES	118 EQUIP BOOM	REC	360	20	1	C	20	1	360	REC	119 EQUIP BOOM	RECEPTACLES	6
7	PNEUMATIC BRAKE	118 EQUIP BOOM	GEN	120	20	1	A	20	1	360	REC	119 EQUIP BOOM	RECEPTACLES	8
9	MONITOR	118 EQUIP BOOM	GEN	150	20	1	B	20	1	360	REC	119 EQUIP BOOM	RECEPTACLES	10
11	RECEPTACLES	118 DOC BOOM	REC	360	20	1	C	20	1	180	REC	119 EQUIP BOOM	RECEPTACLE	12
13	RECEPTACLES	118 DOC BOOM	REC	360	20	1	A	20	1	120	GEN	119 EQUIP BOOM	PNEUMATIC BRAKE	14
15	RECEPTACLE	118 DOC BOOM	REC	180	20	1	B	20	1	150	GEN	119 EQUIP BOOM	MONITOR	16
17	PNEUMATIC BRAKE	118 DOC BOOM	GEN	120	20	1	C	20	1	180	REC	119 ANES BOOM	RECEPTACLE	18
19	MONITOR	118 DOC BOOM	GEN	150	20	1	A	20	1	360	REC	119 ANES BOOM	RECEPTACLES	20
21	MONITOR	118 DOC BOOM	GEN	150	20	1	B	20	1	360	REC	119 ANES BOOM	RECEPTACLES	22
23	STERIS AV RACK	118	GEN	200	20	1	C	20	1	180	REC	119 ANES BOOM	RECEPTACLE	24
25	STERIS TOUCH PNL	118	GEN	150	20	1	A	20	1	120	GEN	119 ANES BOOM	PNEUMATIC BRAKE	26
27	STERIS CAMERA	118	GEN	100	20	1	B	20	1	150	GEN	119 ANES BOOM	MONITOR	28
29	SPARE		SPARE	0	20	1	C	20	1	200	GEN	119	STERIS AV RACK	30
31	SPARE		SPARE	0	20	1	A	20	1	150	GEN	119	STERIS TOUCH PNL	32
33	SPARE		SPARE	0	20	1	B	20	1	100	GEN	119	STERIS CAMERA	34
35	SPARE		SPARE	0	20	1	C	20	1	180	GEN	119	GE C-ARM WORKSTATION	36
37	SPARE		SPARE	0	20	1	A	20	1	0	SPARE		SPARE	38
39	SPARE		SPARE	0	20	1	B	20	1	0	SPARE		SPARE	40
41	SPARE		SPARE	0	20	1	C	20	1	0	SPARE		SPARE	42

ALL CONNECTED	KVA	3P AVE AMPS	* PHASE TOTALS	VA	AMPS	BUS TOTALS	KVA	
TOTAL CONNECTED	7.16	19.9	* A-N	2425.2	20.2	CONNECTED	7.16	DATE: Apr 25, 2014
TOTAL DEMAND	7.16	19.9	* B-N	2415.2	20.1	DEMAND	7.16	TIME: 16:23:02
TOTAL DESIGN	7.16	19.9	* C-N	2315.6	19.3	DESIGN	7.16	

PANEL: H1E1
LOCATION: ELECT RM 138
FED FROM: _H1ED1

OC DEVICE TYPE: Breaker
DEVICE FAMILY: Bolt On

ENCLOSURE: NEMA 1
MOUNTING: Surface
VOLTAGE: 480/277

MAINS(A): 50
WIRING: 3-Phase 4-Wire

CONTINUOUS(A): 100
BUS SC RATING(A) 14000
FAULT CURRENT(A): 0

CKT	DESCRIPTION	NOTES	DEMAND CODE	VA	OC AMPS	P	PHASE	OC AMPS	P	VA	DEMAND CODE	NOTES	DESCRIPTION	CKT
1	LIGHTING		LTS	1513	20	1	A	20	1	128	LTS		EXTERIOR LIGHTING	2
3	LIGHTING		LTS	1724	20	1	B	20	1	0	SPARE		SPARE	4
5	LIGHTING		LTS	2975	20	1	C	20	1	0	SPARE		SPARE	6
7	EXIT SIGNS		LTS	21	20	1	A	20	1	0	SPARE		SPARE	8
9	SPARE		SPARE	0	20	1	B	20	1	0	SPARE		SPARE	10
11	SPARE		SPARE	0	20	1	C	20	1	0	SPARE		SPARE	12
13	SPACE		SPACE	0	0	1	A	0	1	0	SPACE		SPACE	14
15	SPACE		SPACE	0	0	1	B	0	1	0	SPACE		SPACE	16
17	SPACE		SPACE	0	0	1	C	0	1	0	SPACE		SPACE	18
19	SPACE		SPACE	0	0	1	A	0	1	0	SPACE		SPACE	20
21	SPACE		SPACE	0	0	1	B	0	1	0	SPACE		SPACE	22
23	SPACE		SPACE	0	0	1	C	0	1	0	SPACE		SPACE	24
25	SPACE		SPACE	0	0	1	A	0	1	0	SPACE		SPACE	26
27	SPACE		SPACE	0	0	1	B	0	1	0	SPACE		SPACE	28
29	SPACE		SPACE	0	0	1	C	0	1	0	SPACE		SPACE	30

ALL CONNECTED	KVA	3P AVE AMPS	* PHASE TOTALS	VA	AMPS	BUS TOTALS	KVA	
TOTAL CONNECTED	6.36	7.7	* A-N	1662.0	6.0	CONNECTED	6.36	DATE: Apr 25, 2014
TOTAL DEMAND	6.36	7.7	* B-N	1724.0	6.2	DEMAND	6.36	TIME: 16:23:02
TOTAL DESIGN	7.95	9.6	* C-N	2975.0	10.7	DESIGN	7.95	

PANEL: L1N2
LOCATION: ELECT RM 138
FED FROM: _L1N1

OC DEVICE TYPE: Breaker
DEVICE FAMILY: Bolt On

ENCLOSURE: NEMA 1
MOUNTING: Surface
VOLTAGE: 208/120

MAINS(A): 100
WIRING: 3-Phase 4-Wire

CONTINUOUS(A): 100
BUS SC RATING(A) 10000
FAULT CURRENT(A): 0

CKT	DESCRIPTION	NOTES	DEMAND CODE	VA	OC AMPS	P	PHASE	OC AMPS	P	VA	DEMAND CODE	NOTES	DESCRIPTION	CKT
1	RECEPTACLES	117	REC	540	20	1	A	20	1	720	REC	116	RECEPTACLES	2
3	RECEPTACLES	117	REC	720	20	1	B	20	1	720	REC	116	RECEPTACLES	4
5	RECEPTACLES	119	REC	720	20	1	C	20	1	720	REC	118	RECEPTACLES	6
7	RECEPTACLES	119	REC	900	20	1	A	20	1	720	REC	118	RECEPTACLES	8
9	RECEPTACLES	121	REC	720	20	1	B	20	1	900	REC	122	RECEPTACLES	10
11	RECEPTACLES	121	REC	540	20	1	C	20	1	720	REC	126	RECEPTACLES	12
13	RECEPTACLES	123	REC	900	20	1	A	20	1	720	REC	126	RECEPTACLES	14
15	RECEPTACLES	123	REC	900	20	1	B	20	1	720	REC	126	RECEPTACLES	16
17	RECEPTACLES	131,132,136,13	REC	900	20	1	C	20	1	720	REC	126	RECEPTACLES	18
19	RECEPTACLES	130,133	REC	900	20	1	A	20	1	1080	REC	126,128	RECEPTACLES	20
21	MICROWAVE OVEN	126	GEN	1680	20	1	B	20	1	1080	REC	133,134	RECEPTACLES	22
23	COFFEE MAKER	126	GEN	1680	20	1	C	20	1	378	GEN	119	AUTO DR OPERATOR	24
25	UC REFRIGERATOR	126	GEN	960	20	1	A	20	1	378	GEN	119	AUTO DR OPERATOR	26
27	AUTO DR OPERATOR	121	GEN	378	20	1	B	20	1	378	GEN	122	AUTO DR OPERATOR	28
29	AUTO DR OPERATOR	121	GEN	378	20	1	C	20	1	378	GEN	122	AUTO DR OPERATOR	30
31	AUTO DR OPERATOR	123	GEN	378	20	1	A	15	1	50	GEN	SITE	IRRIGATION CONT	32
33	SPARE		SPARE	0	20	1	B	20	1	0	SPARE		SPARE	34
35	SPARE		SPARE	0	20	1	C	20	1	0	SPARE		SPARE	36
37	SPARE		SPARE	0	20	1	A	20	1	0	SPARE		SPARE	38
39	SPARE		SPARE	0	20	1	B	20	1	0	SPARE		SPARE	40
41	SPARE		SPARE	0	20	1	C	20	1	0	SPARE		SPARE	42

ALL CONNECTED	KVA	3P AVE AMPS	* PHASE TOTALS	VA	AMPS	BUS TOTALS	KVA	
TOTAL CONNECTED	23.53	65.3	* A-N	8233.6	68.6	CONNECTED	23.53	DATE: Apr 25, 2014
TOTAL DEMAND	20.26	56.2	* B-N	8180.8	68.1	DEMAND	20.26	TIME: 16:23:02
TOTAL DESIGN	20.26	56.2	* C-N	7118.8	59.3	DESIGN	20.26	

PANEL: L1E4
LOCATION: ELECT RM 138
FED FROM: _L1E2

OC DEVICE TYPE: Breaker
DEVICE FAMILY: Bolt On

ENCLOSURE: NEMA 1
MOUNTING: Surface
VOLTAGE: 208/120

MAINS(A): MLO
WIRING: 3-Phase 4-Wire

CONTINUOUS(A): 100
BUS SC RATING(A) 10000
FAULT CURRENT(A): 0

CKT	DESCRIPTION	NOTES	DEMAND CODE	VA	OC AMPS	P	PHASE	OC AMPS	P	VA	DEMAND CODE	NOTES	DESCRIPTION	CKT
1	RECEPTACLES	122 EQUIP BOOM	REC	360	20	1	A	20	1	180	REC	121 EQUIP BOOM	RECEPTACLE	2
3	RECEPTACLES	122 EQUIP BOOM	REC	360	20	1	B	20	1	360	REC	121 EQUIP BOOM	RECEPTACLES	4
5	RECEPTACLES	122 EQUIP BOOM	REC	360	20	1	C	20	1	360	REC	121 EQUIP BOOM	RECEPTACLES	6
7	PNEUMATIC BRAKE	122 EQUIP BOOM	GEN	120	20	1	A	20	1	360	REC	121 EQUIP BOOM	RECEPTACLES	8
9	MONITOR	122 EQUIP BOOM	GEN	150	20	1	B	20	1	360	REC	121 EQUIP BOOM	RECEPTACLES	10
11	RECEPTACLES	122 DOC BOOM	REC	360	20	1	C	20	1	180	REC	121 EQUIP BOOM	RECEPTACLE	12
13	RECEPTACLES	122 DOC BOOM	REC	360	20	1	A	20	1	120	GEN	121 EQUIP BOOM	PNEUMATIC BRAKE	14
15	RECEPTACLE	122 DOC BOOM	REC	180	20	1	B	20	1	150	GEN	121 EQUIP BOOM	MONITOR	16
17	PNEUMATIC BRAKE	122 DOC BOOM	GEN	120	20	1	C	20	1	180	REC	121 ANES BOOM	RECEPTACLE	18
19	MONITOR	122 DOC BOOM	GEN	150	20	1	A	20	1	360	REC	121 ANES BOOM	RECEPTACLES	20
21	MONITOR	122 DOC BOOM	GEN	150	20	1	B	20	1	360	REC	121 ANES BOOM	RECEPTACLES	22
23	STERIS AV RACK	122	GEN	200	20	1	C	20	1	180	REC	121 ANES BOOM	RECEPTACLE	24
25	STERIS TOUCH PNL	122	GEN	150	20	1	A	20	1	120	GEN	121 ANES BOOM	PNEUMATIC BRAKE	26
27	STERIS CAMERA	122	GEN	100	20	1	B	20	1	150	GEN	121 ANES BOOM	MONITOR	28
29	SPARE		SPARE	0	20	1	C	20	1	200	GEN	121	STERIS AV RACK	30
31	SPARE		SPARE	0	20	1	A	20	1	150	GEN	121	STERIS TOUCH PNL	32
33	SPARE		SPARE	0	20	1	B	20	1	100	GEN	121	STERIS CAMERA	34
35	SPARE		SPARE	0	20	1	C	20	1	180	GEN	121	GE C-ARM WORKSTATION	36
37	SPARE		SPARE	0	20	1	A	20	1	0	SPARE		SPARE	38
39	SPARE		SPARE	0	20	1	B	20	1	0	SPARE		SPARE	40
41	SPARE		SPARE	0	20	1	C	20	1	0	SPARE		SPARE	42

ALL CONNECTED	KVA	3P AVE AMPS	* PHASE TOTALS	VA	AMPS	BUS TOTALS	KVA	
TOTAL CONNECTED	7.16	19.9	* A-N	2425.2	20.2	CONNECTED	7.16	DATE: Apr 25, 2014
TOTAL DEMAND	7.16	19.9	* B-N	2415.2	20.1	DEMAND	7.16	TIME: 16:23:02
TOTAL DESIGN	7.16	19.9	* C-N	2315.6	19.3	DESIGN	7.16	

PANEL: H1E2
LOCATION: ELECT RM 138
FED FROM: _H1ED1

OC DEVICE TYPE: Breaker
DEVICE FAMILY: Bolt On

ENCLOSURE: NEMA 1
MOUNTING: Surface
VOLTAGE: 480/277

MAINS(A): 100
WIRING: 3-Phase 4-Wire

CONTINUOUS(A): 100
BUS SC RATING(A) 14000
FAULT CURRENT(A): 0

CKT	DESCRIPTION	NOTES	DEMAND CODE	VA	OC AMPS	P	PHASE	OC AMPS	P	VA	DEMAND CODE	NOTES	DESCRIPTION	CKT
1	HWP-1	MECH 136	MECH EQUIPT	831	15	3	A	15	3	831	MECH EQUIPT	MECH 136	HWP-2	2
3	""			831	""		B	""		831			""	4
5	""			831	""		C	""		831			""	6
7	MAC-1	PLUMB 137	MECH EQUIPT	1885	15	3	A	15	3	1885	MECH EQUIPT	PLUMB 137	MVP-1	8
9	""			1885	""		B	""		1885			""	10
11	""			1885	""		C	""		1885			""	12
13	EPS	131	GEN	933	15	3	A	15	3	933	GEN	131	EPS	14
15	""			933	""		B	""		933			""	16
17	""			933	""		C	""		933			""	18
19	EPS	131	GEN	933	15	3	A	15	3	933	GEN	131	EPS	20
21	""			933	""		B	""		933			""	22
23	""			933	""		C	""		933			""	24
25	AC-1	139	MECH EQUIPT	1164	15	3	A	15	3	831	MECH EQUIPT	114	EAC-1	26
27	""			1164	""		B	""		831			""	28
29	""			1164	""		C	""		831			""	30
31	H1-1	108	MECH EQUIPT	3963	20	3	A	30	3	5958	MECH EQUIPT	108	H1-2	32
33	""			3963	""		B	""		5958			""	34
35	""			3963	""		C	""		5958			""	36
37	SPACE		SPACE	0	0	1	A	0	1	0	SPACE		SPACE	38
39	SPACE		SPACE	0	0	1	B	0	1	0	SPACE		SPACE	40
41	SPACE		SPACE	0	0	1	C	0	1	0	SPACE		SPACE	42

ALL CONNECTED	KVA	3P AVE AMPS	* PHASE TOTALS	VA	AMPS	BUS TOTALS	KVA	
TOTAL CONNECTED	63.07	75.9	* A-N	21023.2	75.9	CONNECTED	63.07	DATE: Apr 25, 2014
TOTAL DEMAND	63.07	75.9	* B-N	21023.2	75.9	DEMAND	63.07	TIME: 16:23:02
TOTAL DESIGN	63.07	75.9	* C-N	21023.2	75.9	DESIGN	63.07	

PANEL: L1E1
LOCATION: ELECT RM 115
FED FROM: _1TEA SEC

OC DEVICE TYPE: Breaker
DEVICE FAMILY: Bolt On

ENCLOSURE: NEMA 1
MOUNTING: Surface
VOLTAGE: 208/120

MAINS(A): 110
WIRING: 3-Phase 4-Wire

CONTINUOUS(A): 225
BUS SC RATING(A) 10000
FAULT CURRENT(A): 0

CKT	DESCRIPTION	NOTES	DEMAND CODE	VA	OC AMPS	P	PHASE	OC AMPS	P	VA	DEMAND CODE	NOTES	DESCRIPTION	CKT
1	MED GAS ALARM PNLS	111C	GEN	150	20	1	A	20	1	1176	MECH EQUIPT	106	ESP-1	2
3	FIRE/SMOKE DAMPERS	1ST FLR.	GEN	200	20	1	B	20	1	400	LTS	106	ELEV CAB LTG & CTRL	4
5	RECEPTACLES	111C	REC	720	20	1	C	20	1	360	REC	106 & ELEV PIT	RECEPTACLES	6
7	RECEPTACLES	111C	REC	720	20	1	A	20	1	540	REC	111	HEADWALL UNIT	8
9	HEADWALL UNIT	111	REC	540	20	1	B	20	1	540	REC	111	HEADWALL UNIT	10
11	HEADWALL UNIT	111	REC	540	20	1	C	20	1	540	REC	111	HEADWALL UNIT	12
13	HEADWALL UNIT	111	REC	540	20	1	A	20	1	540	REC	111	HEADWALL UNIT	14
15	FACP	103	GEN	200	20	1	B	20	1	540	REC	111	HEADWALL UNIT	16
17	ELEV PIT LT & REC	ELEV PIT	REC	360	20	1	C	20	1	540	REC	111	HEADWALL UNIT	18
19	SPARE		SPARE	0	20	1	A	20	1	380	GEN	111C	HVAC CTRL + REC	20
21	SPARE		SPARE	0	20	1	B	20	1	0	SPARE		SPARE	22
23	SPARE		SPARE	0	20	1	C	20	1	0	SPARE		SPARE	24
25	SPARE		SPARE	0	20	1	A	20	1	0	SPARE		SPARE	26
27	SPARE		SPARE	0	20	1	B	20	1	0	SPARE		SPARE	28
29	SPARE		SPARE	0	20	1	C	20	1	0	SPARE		SPARE	30
31	SPARE		SPARE	0	20	1	A	20	1	0	SPARE		SPARE	32
33	SPARE		SPARE	0	20	1	B	20	1	0	SPARE		SPARE	34
35	SPARE		SPARE	0	20	1	C	20	1	0	SPARE		SPARE	36
37	SPARE		SPARE	0	20	1	A	20	1	0	SPARE		SPARE	38
39	SPARE		SPARE	0	20	1	B	20	1	0	SPARE		SPARE	40
41	SPARE		SPARE	0	20	1	C	20	1	0	SPARE		SPARE	42

ALL CONNECTED	KVA	3P AVE AMPS	* PHASE TOTALS	VA	AMPS	BUS TOTALS	KVA	
TOTAL CONNECTED	9.47	26.3	* A-N	4004.4	33.3	CONNECTED	9.47	DATE: Apr 25, 2014
TOTAL DEMAND	9.47	26.3	* B-N	2417.0	20.1	DEMAND	9.47	TIME: 16:23:02
TOTAL DESIGN	9.57	26.6	* C-N	3060.0	25.5	DESIGN	9.57	

PANEL: L1E5
LOCATION: ELECT RM 138
FED FROM: _L1E2

OC DEVICE TYPE: Breaker
DEVICE FAMILY: Bolt On

ENCLOSURE: NEMA 1
MOUNTING: Surface
VOLTAGE: 208/120

MAINS(A): MLO
WIRING: 3-Phase 4-Wire

CONTINUOUS(A): 100
BUS SC RATING(A) 10000
FAULT CURRENT(A): 0

CKT	DESCRIPTION	NOTES	DEMAND CODE	VA	OC AMPS	P	PHASE	OC AMPS	P	VA	DEMAND CODE	NOTES	DESCRIPTION	CKT
1	RECEPTACLE	123 ANES BOOM	REC	180	20	1	A	20	1	180	REC	123 EQUIP BOOM	RECEPTACLE	2
3	RECEPTACLES	123 ANES BOOM	REC	360	20	1	B	20	1	360	REC	123 EQUIP BOOM	RECEPTACLES	4
5	RECEPTACLES	123 ANES BOOM	REC	360	20	1	C	20	1	360	REC	123 EQUIP BOOM	RECEPTACLES	6
7	RECEPTACLE	123 ANES BOOM	REC	180	20	1	A	20	1	360	REC	123 EQUIP BOOM	RECEPTACLES	8
9	PNEUMATIC BRAKE	123 ANES BOOM	GEN	120	20	1	B	20	1	360	REC	123 EQUIP BOOM	RECEPTACLES	10
11	MONITOR	123 ANES BOOM	GEN	150	20	1	C	20	1	180	REC	123 EQUIP BOOM	RECEPTACLE	12
13	STERIS AV RACK	123	GEN	200	20	1	A	20	1	120	GEN	123 EQUIP BOOM	PNEUMATIC BRAKE	14
15	STERIS TOUCH PNL	123	GEN	150	20	1	B	20	1	150	GEN	123 EQUIP BOOM	MONITOR	16
17	STERIS CAMERA	123	GEN	100	20	1	C	20	1	180	GEN	123	GE C-ARM WORKSTATION	18
19	FSD	1ST FLOOR	GEN	100	20	1	A	20	1	500	MECH EQUIPT	136	WH-1 & CP-1	20
21	RECEPTACLES	131	REC	720	20	1	B	20	1	500	MECH EQUIPT	136	WH-2 & CP-2	22
23	RECEPTACLES	128,129,131	REC	720	20	1	C	20	1	960	GEN	131	UC REFRIGERATOR	24
25	RECEPTACLES	134,138	REC	360	20	1	A	20	1	1800	GEN	132	ADJ COUNTER SINK	26
27	HVAC CTRL	136	GEN	200	20	1	B	20	1	1200	GEN	132	ULTRASONIC CLEANER	28
29	ADJ COUNTER SINK	131	GEN	1800	20	1	C	20	1	1200	GEN	132	ULTRASONIC CLEANER	30
31	ENDOSCOPE STOR CAB	129	GEN	1440	20	1	A	20	1	1440	GEN	129	ENDOSCOPE STOR CAB	32
33	ENDOSCOPE STOR CAB	129	GEN	1440	20	1	B	20	1	1440	GEN	129	ENDOSCOPE STOR CAB	34
35	ENDOSCOPE STOR CAB	129	GEN	1440	20	1	C	20	1	1440	GEN	129	ENDOSCOPE STOR CAB	36
37	SPARE		SPARE	0	20	1	A	20	1	0	SPARE		SPARE	38
39	SPARE		SPARE	0	20	1	B	20	1	0	SPARE		SPARE	40
41	SPARE		SPARE	0	20	1	C	20	1	0	SPARE		SPARE	42

ALL CONNECTED	KVA	3P AVE AMPS	* PHASE TOTALS	VA	AMPS	BUS TOTALS	KVA	
TOTAL CONNECTED	22.69	63.0	* A-N	6839.9	57.0	CONNECTED	22.69	DATE: Apr 25, 2014
TOTAL DEMAND	22.69	63.0	* B-N	6976.2	58.1	DEMAND	22.69	TIME: 16:23:02
TOTAL DESIGN	22.69	63.0	* C-N	8878.2	73.9	DESIGN	22.69	

Issues & Revisions: Date

CONSULTANTS:

TED JACOB ENGINEERING GROUP
LEADING BY INNOVATION

JOB NO. MEI-001

1763 BROADWAY, OAKLAND, CA 94612-2105
(510) 763-4880 FAX (510) 763-5099

Copyright © 2013 Ted Jacob Engineering Group. All rights reserved. No part of this work may be reproduced, changed, copied or transmitted in any form or by any means, electronic or mechanical, including, but not retrieval system, except as may be expressly permitted in writing from TJEG.

REGISTERED PROFESSIONAL ENGINEER
No. E014431
Exp. 6-30-14
CALIFORNIA

KEY PLAN

ARCHITECT/ENGINEERS:

MEI
architecture + interiors

239 9TH STREET, SUITE 201
SAN FRANCISCO, CA 94103
T (415) 682-7376 F (415) 682-7339

Drawing Title: **PANEL SCHEDULES**

Approved: Project Director

Project Title: **CONSOLIDATE / EXPAND MEDICAL PROCEDURES MINOR (CEMP)**

Location: **VANCHCS - MATHER, CA**

Date: APRIL 22, 2014 | Checked: JL | Drawn: SU

Project Number: 612-111

Building Number

Drawing Number: **E6-1**
Dwg. -- of --

Office of Facilities Management
Department of Veterans Affairs

FULLY SPRINKLERED **100% CONSTRUCTION DOCUMENTS**

PANEL: L1E6 | OC DEVICE TYPE: Breaker | ENCLOSURE: NEMA 1 | MAINS(A): 150 | CONTINUOUS(A): 225
LOCATION: TELCOM RM 114 | DEVICE FAMILY: Bolt On | MOUNTING: Surface | WIRING: 3-Phase 4-Wire | BUS SC RATING(A) 10000
FED FROM: _1TEC SEC | VOLTAGE: 208/120 | FAULT CURRENT(A): 0

CKT	DESCRIPTION	NOTES	DEMAND CODE	VA	OC AMPS	P	PHASE	OC AMPS	P	VA	DEMAND CODE	NOTES	DESCRIPTION	CKT
1	RECEPTACLE IT	114	REC	2000	30	2	A	30	2	2000	REC	114	RECEPTACLE IT	2
3	""			2000	""		B	""		2000			""	4
5	RECEPTACLES IT	114	REC	500	20	1	C	20	1	500	REC	114	RECEPTACLES IT	6
7	RECEPTACLE IT	114	REC	2000	30	2	A	30	2	2000	REC	114	RECEPTACLE IT	8
9	""			2000	""		B	""		2000			""	10
11	RECEPTACLES IT	114	REC	500	20	1	C	20	1	500	REC	114	RECEPTACLES IT	12
13	RECEPTACLES	114	REC	720	20	1	A	20	1	0	SPARE		SPARE	14
15	SPARE		SPARE	0	20	1	B	20	1	0	SPARE		SPARE	16
17	SPARE		SPARE	0	20	1	C	20	1	0	SPARE		SPARE	18
19	SPACE		SPACE	0	0	1	A	0	1	0	SPACE		SPACE	20
21	SPACE		SPACE	0	0	1	B	0	1	0	SPACE		SPACE	22
23	SPACE		SPACE	0	0	1	C	0	1	0	SPACE		SPACE	24
25	SPACE		SPACE	0	0	1	A	50	3	3240	NONE	PANEL L2E2	_L2E2	26
27	SPACE		SPACE	0	0	1	B	""		3240			""	28
29	SPACE		SPACE	0	0	1	C	""		3240			""	30

ALL CONNECTED	KVA	3P AVE AMPS	* PHASE TOTALS	VA	AMPS	BUS TOTALS	KVA
TOTAL CONNECTED	28.44	78.9	* A-N	11960.0	99.6	CONNECTED	28.44
TOTAL DEMAND	19.22	53.3	* B-N	11240.0	93.6	DEMAND	19.22
TOTAL DESIGN	19.22	53.3	* C-N	5240.0	43.6	DESIGN	19.22

DATE: Apr 25, 2014
TIME: 16:23:02

PANEL: L2N1 | OC DEVICE TYPE: Breaker | ENCLOSURE: NEMA 1 | MAINS(A): 150 | CONTINUOUS(A): 225
LOCATION: ELECT RM 211 | DEVICE FAMILY: Bolt On | MOUNTING: Surface | WIRING: 3-Phase 4-Wire | BUS SC RATING(A) 10000
FED FROM: _2TNA SEC | VOLTAGE: 208/120 | FAULT CURRENT(A): 0

CKT	DESCRIPTION	NOTES	DEMAND CODE	VA	OC AMPS	P	PHASE	OC AMPS	P	VA	DEMAND CODE	NOTES	DESCRIPTION	CKT
1	RECEPTACLES	209	REC	720	20	1	A	20	1	400	LTS	ROOF	AHU-1 LTG & REC	2
3	RECEPTACLES	213	REC	540	20	1	B	20	1	540	REC	208	RECEPTACLES	4
5	RECEPTACLES	214	REC	540	20	1	C	20	1	720	REC	207	RECEPTACLES	6
7	REC 203,215	216, 218	REC	900	20	1	A	20	1	540	REC	206	RECEPTACLES	8
9	RECEPTACLES	201, 227	REC	1080	20	1	B	20	1	720	REC	238	RECEPTACLES	10
11	RECEPTACLES	221	REC	720	20	1	C	20	1	720	REC	237	RECEPTACLES	12
13	RECEPTACLES	ROOF	REC	720	20	1	A	20	1	720	REC	242, 243	REC 212	14
15	RECEPTACLES	233	REC	900	20	1	B	20	1	720	REC	236	RECEPTACLES	16
17	RECEPTACLES	232	REC	720	20	1	C	20	1	720	REC	234	RECEPTACLES	18
19	RECEPTACLES	231	REC	900	20	1	A	20	1	696	GEN	234	REFRIGERATOR	20
21	COPIER	241	GEN	1080	20	1	B	20	1	180	REC	LOW ROOF	RECEPTACLES	22
23	REC 221	239, 240	REC	900	20	1	C	20	1	840	REC	206	RECEPTACLES	24
25	RECEPTACLES	226, 228	REC	900	20	1	A	20	1	720	REC	201A	RECEPTACLES	26
27	RECEPTACLES	229	REC	900	20	1	B	20	1	1200	GEN	241	PROJECTOR & SCREEN	28
29	AUTO DR OPERATOR	212	GEN	378	20	1	C	20	1	1680	GEN	234	MICROWAVE OVEN	30
31	SPARE		SPARE	0	20	1	A	20	1	0	SPARE		SPARE	32
33	SPARE		SPARE	0	20	1	B	20	1	0	SPARE		SPARE	34
35	SPARE		SPARE	0	20	1	C	20	1	0	SPARE		SPARE	36
37	SPARE		SPARE	0	20	1	A	20	1	0	SPARE		SPARE	38
39	SPARE		SPARE	0	20	1	B	20	1	0	SPARE		SPARE	40
41	SPARE		SPARE	0	20	1	C	20	1	0	SPARE		SPARE	42

ALL CONNECTED	KVA	3P AVE AMPS	* PHASE TOTALS	VA	AMPS	BUS TOTALS	KVA
TOTAL CONNECTED	22.98	63.8	* A-N	7210.4	60.0	CONNECTED	22.98
TOTAL DEMAND	19.19	53.3	* B-N	7845.6	65.3	DEMAND	19.19
TOTAL DESIGN	19.29	53.5	* C-N	7924.4	66.0	DESIGN	19.29

DATE: Apr 25, 2014
TIME: 16:23:02

PANEL: H2E1 | OC DEVICE TYPE: Breaker | ENCLOSURE: NEMA 1 | MAINS(A): 50 | CONTINUOUS(A): 100
LOCATION: ELECT RM 211 | DEVICE FAMILY: Bolt On | MOUNTING: Surface | WIRING: 3-Phase 4-Wire | BUS SC RATING(A) 14000
FED FROM: _H1ED1 | VOLTAGE: 480/277 | FAULT CURRENT(A): 0

CKT	DESCRIPTION	NOTES	DEMAND CODE	VA	OC AMPS	P	PHASE	OC AMPS	P	VA	DEMAND CODE	NOTES	DESCRIPTION	CKT
1	LIGHTING		LTS	1464	20	1	A	20	1	64	LTS		EXTERIOR LIGHTING	2
3	LIGHTING		LTS	1352	20	1	B	20	1	0	SPARE		SPARE	4
5	EXIT SIGNS		LTS	17	20	1	C	20	1	0	SPARE		SPARE	6
7	SPARE		SPARE	0	20	1	A	20	1	0	SPARE		SPARE	8
9	SPARE		SPARE	0	20	1	B	20	1	0	SPARE		SPARE	10
11	SPARE		SPARE	0	20	1	C	20	1	0	SPARE		SPARE	12
13	SPACE		SPACE	0	0	1	A	0	1	0	SPACE		SPACE	14
15	SPACE		SPACE	0	0	1	B	0	1	0	SPACE		SPACE	16
17	SPACE		SPACE	0	0	1	C	0	1	0	SPACE		SPACE	18
19	SPACE		SPACE	0	0	1	A	0	1	0	SPACE		SPACE	20
21	SPACE		SPACE	0	0	1	B	0	1	0	SPACE		SPACE	22
23	SPACE		SPACE	0	0	1	C	0	1	0	SPACE		SPACE	24
25	SPACE		SPACE	0	0	1	A	0	1	0	SPACE		SPACE	26
27	SPACE		SPACE	0	0	1	B	0	1	0	SPACE		SPACE	28
29	SPACE		SPACE	0	0	1	C	0	1	0	SPACE		SPACE	30

ALL CONNECTED	KVA	3P AVE AMPS	* PHASE TOTALS	VA	AMPS	BUS TOTALS	KVA
TOTAL CONNECTED	2.90	3.5	* A-N	1528.0	5.5	CONNECTED	2.90
TOTAL DEMAND	2.90	3.5	* B-N	1352.0	4.9	DEMAND	2.90
TOTAL DESIGN	3.62	4.4	* C-N	17.0	0.1	DESIGN	3.62

DATE: Apr 25, 2014
TIME: 16:23:02

PANEL: L2E1 | OC DEVICE TYPE: Breaker | ENCLOSURE: NEMA 1 | MAINS(A): 110 | CONTINUOUS(A): 225
LOCATION: ELECT RM 211 | DEVICE FAMILY: Bolt On | MOUNTING: Surface | WIRING: 3-Phase 4-Wire | BUS SC RATING(A) 10000
FED FROM: _2TEA SEC | VOLTAGE: 208/120 | FAULT CURRENT(A): 0

CKT	DESCRIPTION	NOTES	DEMAND CODE	VA	OC AMPS	P	PHASE	OC AMPS	P	VA	DEMAND CODE	NOTES	DESCRIPTION	CKT
1	AHU-1 CONTROL	ROOF	MECH EQUIPT	200	20	1	A	15	1	250	MECH EQUIPT	1ST FLR ROOF	EF-1 & EF-2	2
3	EF-3	ROOF	MECH EQUIPT	100	20	1	B	20	1	360	REC	212	RECEPTACLES	4
5	RECEPTACLES	208,209,211	REC	1020	20	1	C	20	1	720	REC	212	RECEPTACLES	6
7	RECEPTACLES	206,207,208	REC	1020	20	1	A	20	1	720	REC	212	RECEPTACLES	8
9	REC	213, 214	REC	840	20	1	B	20	1	1080	REC	203	RECEPTACLES	10
11	SPARE		SPARE	0	20	1	C	20	1	200	MECH EQUIPT	2ND FLR	HVAC CONTROL	12
13	SPARE		SPARE	0	20	1	A	20	1	1920	GEN	221	SECURITY SYSTEM	14
15	SPARE		SPARE	0	20	1	B	20	1	1920	GEN	221	SECURITY SYSTEM	16
17	SPARE		SPARE	0	20	1	C	20	1	1920	GEN	221	NURSE CALL SYSTEM	18
19	STERIS MONITOR	240	GEN	200	20	1	A	20	1	1920	GEN	221	NURSE CALL SYSTEM	20
21	STERIS AV RACK	240	GEN	360	20	1	B	20	1	360	GEN	231	STERIS AV RACK	22
23	SPARE		SPARE	0	20	1	C	20	1	200	GEN	231	STERIS MONITOR	24
25	SPARE		SPARE	0	20	1	A	20	1	200	GEN	229	STERIS MONITOR	26
27	SPARE		SPARE	0	20	1	B	20	1	0	SPARE		SPARE	28
29	SPARE		SPARE	0	20	1	C	20	1	0	SPARE		SPARE	30
31	SPARE		SPARE	0	20	1	A	20	1	0	SPARE		SPARE	32
33	SPARE		SPARE	0	20	1	B	20	1	0	SPARE		SPARE	34
35	SPARE		SPARE	0	20	1	C	20	1	0	SPARE		SPARE	36
37	SPACE		SPACE	0	0	1	A	0	1	0	SPACE		SPACE	38
39	SPACE		SPACE	0	0	1	B	0	1	0	SPACE		SPACE	40
41	SPACE		SPACE	0	0	1	C	0	1	0	SPACE		SPACE	42

ALL CONNECTED	KVA	3P AVE AMPS	* PHASE TOTALS	VA	AMPS	BUS TOTALS	KVA
TOTAL CONNECTED	15.46	42.9	* A-N	6407.9	53.4	CONNECTED	15.46
TOTAL DEMAND	15.46	42.9	* B-N	5006.0	41.7	DEMAND	15.46
TOTAL DESIGN	15.46	42.9	* C-N	4045.5	33.7	DESIGN	15.46

DATE: Apr 25, 2014
TIME: 16:23:02

PANEL: H2E2 | OC DEVICE TYPE: Breaker | ENCLOSURE: NEMA 1 | MAINS(A): 170 | CONTINUOUS(A): 225
LOCATION: ELECT RM 211 | DEVICE FAMILY: Bolt On | MOUNTING: Surface | WIRING: 3-Phase 4-Wire | BUS SC RATING(A) 14000
FED FROM: _H1ED1 | VOLTAGE: 480/277 | FAULT CURRENT(A): 0

CKT	DESCRIPTION	NOTES	DEMAND CODE	VA	OC AMPS	P	PHASE	OC AMPS	P	VA	DEMAND CODE	NOTES	DESCRIPTION	CKT
1	AHU-1	ROOF	MECH EQUIPT	27157	110	3	A	15	3	2992	MECH EQUIPT	ROOF	DC-1	2
3	""			27157	""		B	""		2992			""	4
5	""			27157	""		C	""		2992			""	6
7	CHP-1	Roof	MECH EQUIPT	2106	20	3	A	20	3	2106	MECH EQUIPT	ROOF	CHP-2	8
9	""			2106	""		B	""		2106			""	10
11	""			2106	""		C	""		2106			""	12
13	EAC-2	TELECOM 221	MECH EQUIPT	443	15	3	A	0	1	0	SPACE		SPACE	14
15	""			443	""		B	0	1	0	SPACE		SPACE	16
17	""			443	""		C	0	1	0	SPACE		SPACE	18
19	SPACE		SPACE	0	0	1	A	0	1	0	SPACE		SPACE	20
21	SPACE		SPACE	0	0	1	B	0	1	0	SPACE		SPACE	22
23	SPACE		SPACE	0	0	1	C	0	1	0	SPACE		SPACE	24
25	SPACE		SPACE	0	0	1	A	0	1	0	SPACE		SPACE	26
27	SPACE		SPACE	0	0	1	B	0	1	0	SPACE		SPACE	28
29	SPACE		SPACE	0	0	1	C	0	1	0	SPACE		SPACE	30
31	SPACE		SPACE	0	0	1	A	0	1	0	SPACE		SPACE	32
33	SPACE		SPACE	0	0	1	B	0	1	0	SPACE		SPACE	34
35	SPACE		SPACE	0	0	1	C	0	1	0	SPACE		SPACE	36
37	SPACE		SPACE	0	0	1	A	0	1	0	SPACE		SPACE	38
39	SPACE		SPACE	0	0	1	B	0	1	0	SPACE		SPACE	40
41	SPACE		SPACE	0	0	1	C	0	1	0	SPACE		SPACE	42

ALL CONNECTED	KVA	3P AVE AMPS	* PHASE TOTALS	VA	AMPS	BUS TOTALS	KVA
TOTAL CONNECTED	104.41	125.6	* A-N	34804.0	125.6	CONNECTED	104.41
TOTAL DEMAND	104.41	125.6	* B-N	34804.0	125.6	DEMAND	104.41
TOTAL DESIGN	104.41	125.6	* C-N	34804.0	125.6	DESIGN	104.41

DATE: Apr 25, 2014
TIME: 16:23:02

PANEL: L2E2 | OC DEVICE TYPE: Breaker | ENCLOSURE: NEMA 1 | MAINS(A): 50 | CONTINUOUS(A): 100
LOCATION: ELECT RM 211 | DEVICE FAMILY: Bolt On | MOUNTING: Surface | WIRING: 3-Phase 4-Wire | BUS SC RATING(A) 10000
FED FROM: _L1E6 | VOLTAGE: 208/120 | FAULT CURRENT(A): 0

CKT	DESCRIPTION	NOTES	DEMAND CODE	VA	OC AMPS	P	PHASE	OC AMPS	P	VA	DEMAND CODE	NOTES	DESCRIPTION	CKT
1	RECEPTACLE IT	221	REC	2000	30	2	A	30	2	2000	REC	221	RECEPTACLE IT	2
3	""			2000	""		B	""		2000			""	4
5	RECEPTACLES IT	221	REC	500	20	1	C	20	1	500	REC	221	RECEPTACLES IT	6
7	RECEPTACLES	221	REC	720	20	1	A	20	1	0	SPARE		SPARE	8
9	SPARE		SPARE	0	20	1	B	20	1	0	SPARE		SPARE	10
11	SPARE		SPARE	0	20	1	C	20	1	0	SPARE		SPARE	12
13	SPARE		SPARE	0	20	1	A	20	1	0	SPARE		SPARE	14
15	SPARE		SPARE	0	20	1	B	20	1	0	SPARE		SPARE	16
17	SPARE		SPARE	0	20	1	C	20	1	0	SPARE		SPARE	18
19	SPACE		SPACE	0	0	1	A	0	1	0	SPACE		SPACE	20
21	SPACE		SPACE	0	0	1	B	0	1	0	SPACE		SPACE	22
23	SPACE		SPACE	0	0	1	C	0	1	0	SPACE		SPACE	24
25	SPACE		SPACE	0	0	1	A	0	1	0	SPACE		SPACE	26
27	SPACE		SPACE	0	0	1	B	0	1	0	SPACE		SPACE	28
29	SPACE		SPACE	0	0	1	C	0	1	0	SPACE		SPACE	30

ALL CONNECTED	KVA	3P AVE AMPS	* PHASE TOTALS	VA	AMPS	BUS TOTALS	KVA
TOTAL CONNECTED	9.72	27.0	* A-N	4720.0	39.3	CONNECTED	9.72
TOTAL DEMAND	8.69	24.1	* B-N	4000.0	33.3	DEMAND	8.69
TOTAL DESIGN	8.69	24.1	* C-N	1000.0	8.3	DESIGN	8.69

DATE: Apr 25, 2014
TIME: 16:23:02

PANEL: H2N1 | OC DEVICE TYPE: Breaker | ENCLOSURE: NEMA 1 | MAINS(A): 50 | CONTINUOUS(A): 100
LOCATION: ELECT RM 211 | DEVICE FAMILY: Bolt On | MOUNTING: Surface | WIRING: 3-Phase 4-Wire | BUS SC RATING(A) 14000
FED FROM: _MSB | VOLTAGE: 480/277 | FAULT CURRENT(A): 0

CKT	DESCRIPTION	NOTES	DEMAND CODE	VA	OC AMPS	P	PHASE	OC AMPS	P	VA	DEMAND CODE	NOTES	DESCRIPTION	CKT
1	SPARE		SPARE	0	20	1	A	20	1	2081	LTS		LIGHTING	2
3	SPARE		SPARE	0	20	1	B	20	1	2088	LTS		LIGHTING	4
5	SPARE		SPARE	0	20	1	C	20	1	0	SPARE		SPARE	6
7	SPARE		SPARE	0	20	1	A	20	1	0	SPARE		SPARE	8
9	SPARE		SPARE	0	20	1	B	20	1	0	SPARE		SPARE	10
11	SPARE		SPARE	0	20	1	C	20	1	0	SPARE		SPARE	12
13	SPACE		SPACE	0	0	1	A	0	1	0	SPACE		SPACE	14
15	SPACE		SPACE	0	0	1	B	0	1	0	SPACE		SPACE	16
17	SPACE		SPACE	0	0	1	C	0	1	0	SPACE		SPACE	18
19	SPACE		SPACE	0	0	1	A	0	1	0	SPACE		SPACE	20
21	SPACE		SPACE	0	0	1	B	0	1	0	SPACE		SPACE	22
23	SPACE		SPACE	0	0	1	C	0	1	0	SPACE		SPACE	24
25	SPACE		SPACE	0	0	1	A	0	1	0	SPACE		SPACE	26
27	SPACE		SPACE	0	0	1	B	0	1	0	SPACE		SPACE	28
29	SPACE		SPACE	0	0	1	C	0	1	0	SPACE		SPACE	30

ALL CONNECTED	KVA	3P AVE AMPS	* PHASE TOTALS	VA	AMPS	BUS TOTALS	KVA
TOTAL CONNECTED	4.17	5.0	* A-N	2081.0	7.5	CONNECTED	4.17
TOTAL DEMAND	4.17	5.0	* B-N	2088.0	7.5	DEMAND	4.17
TOTAL DESIGN	5.21	6.3	* C-N	0.0	0.0	DESIGN	5.21

DATE: Apr 25, 2014
TIME: 16:23:02

Issues & Revisions: | Date

CONSULTANTS:

TED JACOB ENGINEERING GROUP
LEADING BY INNOVATION
JOB NO. MEI-001
1763 BROADWAY, OAKLAND, CA 94612-2105
(510) 763-4880 FAX (510) 763-5099

Copyright © 2013 Ted Jacob Engineering Group. All rights reserved. No part of this work may be reproduced, changed, copied or transmitted in any form or by any means, electronic or mechanical, including, but not retrieval system, except as may be expressly permitted in writing from TJEG.

REGISTERED PROFESSIONAL ENGINEER OCTAVIAN J. DRAGOS No.E014431 Exp. 6-30-14 ELECTRICAL STATE OF CALIFORNIA

KEY PLAN

ARCHITECT/ENGINEERS:

MEI architecture + interiors
239 9TH STREET, SUITE 201
SAN FRANCISCO, CA 94103
T (415) 682-7376 F (415) 682-7339
www.meiarchitects.com

Drawing Title: **PANEL SCHEDULES - NORMAL**

Approved: Project Director

Project Title: **CONSOLIDATE / EXPAND MEDICAL PROCEDURES MINOR (CEMP)**

Location: **VANCHCS - MATHER, CA**

Date: APRIL 22, 2014 | Checked: JL | Drawn: SU

Project Number: 612-111

Building Number:

Drawing Number: **E6-2**

Dwg. -- of --

Office of Facilities Management

Department of Veterans Affairs

VA FORM 08-6231, OCT 1978 04/28/2014 1:40:42 PM

FULLY SPRINKLERED **100% CONSTRUCTION DOCUMENTS**

LIGHTING FIXTURE SCHEDULE

TYPE	DESCRIPTION	MANUFACTURER	VOLT	LAMP QTY TYPE	INPUT WATTS	MOUNTING	REMARKS
A1	2'x4' 3-LAMP FLUORESCENT LIGHT FXITURE W/ ACRYLIC PRISMATIC DIFFUSER OVER LAY AND ELECTRONIC BALLAST	LITHONIA #2GT8 F 3 32 A12 MVOLT GEB10IS USPOM	277	(3) F32T8	88	RECESSED	SEE NOTE 1, 6
A2	2'x4' 2-LAMP FLUORESCENT LIGHT FXITURE W/ ACRYLIC PRISMATIC DIFFUSER OVER LAY AND ELECTRONIC BALLAST	LITHONIA #2GT8 F 2 32 A12 MVOLT GEB10IS USPOM	277	(2) F32T8	58	RECESSED	SEE NOTE 1, 6
A3	2'x4' 4-LAMP FLUORESCENT LIGHT FXITURE W/ ACRYLIC PRISMATIC DIFFUSER OVER LAY AND ELECTRONIC BALLAST	LITHONIA #2GT8 F 4 32 A12 MVOLT GEB10IS USPOM	277	(4) F32T8	112	RECESSED	SEE NOTE 1, 6
A4	2'x4' 2-LAMP FLUORESCENT FIXTURE WITH CENTER DIFFUSER AND ELECTRONIC BALLAST	FOCAL POINT #FEQ 24 B 2 T8 E 277 G L835 WH	277	(2) F32T8	58	RECESSED	SEE NOTE 1, 6
A5	2'x4' 3-LAMP FLUORESCENT FIXTURE WITH CENTER DIFFUSER AND ELECTRONIC BALLAST	FOCAL POINT #FEQ 24 B 3 T8 E 277 G L835 WH	277	(3) F32T8	88	RECESSED	SEE NOTE 1, 6
B1	2'x2' FLUORESCENT FIXTURE WITH ACRYLIC PRISMATIC DIFFUSER OVER LAY AND ELECTRONIC BALLAST	LITHONIA #2GT8 F 3 17 A12 MVOLT GEB10IS USPOM	277	(3) F17T8	63	RECESSED	SEE NOTE 1, 6
B2	2'x2' FLUORESCENT FIXTURE WITH CENTER DIFFUSER AND ELECTRONIC BALLAST	FOCAL POINT #FEQ 22 B 3 T8 E 277 G L835 WH	277	(3) F17T8	63	RECESSED	SEE NOTE 1, 6
C1	4' LONG FLUORESCENT PERIMETER LENSED WALL WASH	FOCAL POINT #FW1 19 2T8 1C 277 E RC L835 WH 4'	277	(2) F32T8	58	RECESSED	SEE NOTE 1, 6
C2	6" SQUARE LED DOWNLIGHT, SUITABLE FOR WET LOCATION	PRESCOLITE #LF6SQLED7 277 35K	277	LED	30	RECESSED	
C3	3' LONG FLUORESCENT PERIMETER LENSED WALL WASH	FOCAL POINT #FW1 19 2T8 1C 277 E RC L835 WH 3'	277	(2) F25T8	50	RECESSED	SEE NOTE 1, 6
D1	4' 3-LAMP FLUORESCENT LIGHT FIXTURE COMPLETE W/ WIRE GUARD AND CHAIN HANGING HARDWARE	COLUMBIA #KL 4 3 32 ST E U KLWG4	277	(3) F32T8	88	SUSPENDED	SEE NOTE 3, 6
D2	4' 2-LAMP FLUORESCENT LIGHT FIXTURE COMPLETE W/ WIRE GUARD AND CHAIN HANGING HARDWARE	COLUMBIA #KL 4 2 32 ST E U KLWG4	277	(2) F32T8	58	SUSPENDED	SEE NOTE 3, 6
E1	1'X4' 1-LAMP HIGH ABUSE FLUORESCENT, UL WET LOCATION LISTED	KENALL #SH548-132	277	(1) F32T8	35	WALL/ SURFACE	ELEVATOR PIT SEE NOTE 5
F1	4.5"X4.5" APERTURE LED DOWNLIGHT WITH LENSED TRIM	FOCAL POINT #FL44 13LED L35 277 SQ T L44 SO RLMG	277	(1) F32T8	23	RECESSED	
U1	2' LONG UNDER CABINET FLUOR. TASK LIGHT WITH ELECTRONIC BALLAST AND COMPLETE W/ INTEGRAL ROCKER SWITCH	ALKCO #317 RSW	120	(1) F17T8	17	UNDERCABINET	SEE NOTE 2
U2	3' LONG UNDER CABINET FLUOR. TASK LIGHT WITH ELECTRONIC BALLAST AND COMPLETE W/ INTEGRAL ROCKER SWITCH	ALKCO #325 RSW	120	(1) F25T8	25	UNDERCABINET	SEE NOTE 2
W1	OPEN PERIMETER WALL WASH FLUOR. LIGHT FIXTURE WITH ELECTRONIC BALLAST	FOCAL POINT #FW4 NS 1T8 1C 277 E RC L835 WH	277	(1) F32T8	32	RECESSED	SEE NOTE 1, 4, 6, 8
X1	SINGLE FACE LED EXIT WITH GREEN LETTER AND DIRECTIONAL ARROWS AS SHOWN ON LIGHTING PLANS	LITHONIA #LE-S-W-1-G-277 ELN	277	LED	1.5	UNIVERSAL	
X2	DOUBLE FACE LED EXIT W/ GREEN LETTER AND DIRECTIONAL ARROWS AS SHOWN ON LIGHTING PLANS	LITHONIA #LE-S-W-2-G-277 ELN	277	LED	1.5	UNIVERSAL	
Y1	EXTERIOR FLUORESCENT WALL PACK, FULL CUT-OFF, DIE CAST HOUSING, TRAPEZOID SHAPE, DARK BRONZE FINISH, UL WET LOCATION LISTED, PHOTOELECTRIC CELL	LITHONIA WSTM-32TRT-MD-277-PE	277	(1) CFTR32	32	WALL	SEE NOTE 5
Y2	LINEAR LED COVE LIGHT	LUMENPULSE #LCSRO-277-FIELD-35K-CL-NO	277	LED	6W PER FOOT	COVE	SEE NOTE 7
Y3	LOW WATTAGE LED SLOT LIGHT	FOCAL POINT #FTR AC 4LED L35 1C 277 LD1 XF WH	277	LED	23	SURFACE/SLOT	SEE NOTE 4, 5, 6

LIGHTING FIXTURE SCHEDULE NOTES:

1. COORDINATE MOUNTING TRIM WITH CEILING TYPE. REFER TO REFLECTED CEILING PLANS.
2. HARD WIRE POWER TO NEAREST 120 VOLT RECEPTACLE CIRCUIT.
3. PROVIDE 4' CHAIN HANGING ASSEMBLY AT ROOMS WITH NO CEILING. COORDINATE WITH LIGHTING VENDOR.
4. SEE LIGHTING FLOOR PLANS FOR WALL TO WALL LENGTH. COORDINATE WITH LIGHTING VENDOR.
5. COORDINATE MOUNTING HEIGHT IN THE FIELD WITH ARCHITECT.
6. LAMP COLOR TEMPERATURE SHALL BE 3500 K WITH MINIMUM CRI OF 70 MIN.
7. SEE ARCHITECTURAL DRAWINGS AND DETAILS FOR CONTINUOUS LENGTH AT COVE. COORDINATE WITH LIGHTING VENDOR.
8. COORDINATE WITH LIGHTING VENDOR TO PROVIDE LEFT AND RIGHT END TRIMS AND SLIDING SLEEVES FOR CONTINUOUS RUNS AT FIELD SPECIFIC CONDITIONS.

Issues & Revisions:	Date

CONSULTANTS:

TED JACOB ENGINEERING GROUP
LEADING BY INNOVATION
JOB NO. MEI-001
1763 BROADWAY, OAKLAND, CA 94612-2105
(510) 763-4880 FAX (510) 763-5099

Copyright © 2013 Ted Jacob Engineering Group. All rights reserved. No part of this work may be reproduced, changed, copied or transmitted in any form or by any means, electronic or mechanical, including, but not retrieval system, except as may be expressly permitted in writing from TJEG.

REGISTERED PROFESSIONAL ENGINEER OSMAN J. BRAZOS No.E014431 Exp. 6-30-14 ELECTRICAL CALIFORNIA

KEY PLAN

ARCHITECT/ENGINEERS:

MEI architecture + interiors
239 9TH STREET, SUITE 201
SAN FRANCISCO, CA 94103
T (415) 682-7378 F (415) 682-7339
www.meiarchitects.com

Drawing Title: **LIGHTING FIXTURE SCHEDULE**

Approved: Project Director

Project Title: **CONSOLIDATE / EXPAND MEDICAL PROCEDURES MINOR (CEMP)**

Location: **VANCHCS - MATHER, CA**

Date: **APRIL 22, 2014** | Checked: **JL** | Drawn: **SU**

Project Number: **612-111**

Building Number:

Drawing Number: **E6-3**

Dwg. -- of --

Office of Facilities Management

Department of Veterans Affairs

VA FORM 08-6231, OCT 1978

04/28/2014 1:41:09 PM

FULLY SPRINKLERED

100% CONSTRUCTION DOCUMENTS

SYSTEM NO. W-L-1001

F RATINGS – 1, 2, 3, AND 4 HR (SEE ITEMS 2 AND 3)
T RATINGS – 0, 1, 2, 3, AND 4 HR (SEE ITEM 3)

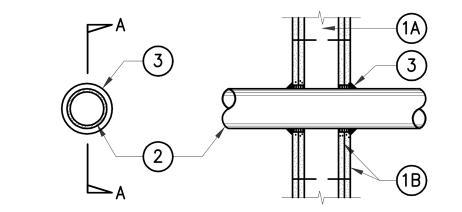

SECTION A-A

1. WALL ASSEMBLY – THE 1, 2, 3, OR 4 HR FIRE-RATED GYPSUM WALLBOARD/STUD WALL ASSEMBLY SHALL BE CONSTRUCTED OF THE MATERIALS AND IN THE MANNER DESCRIBED IN THE INDIVIDUAL U300 OR U400 SERIES WALL OR PARTITION DESIGNS IN THE UL FIRE RESISTANCE DIRECTORY AND SHALL INCLUDE THE FOLLOWING CONSTRUCTION FEATURES:
   A. STUDS – WALL FRAMING MAY CONSIST OF EITHER WOOD STUDS (MAX 2 HR FIRE RATED ASSEMBLIES) OR STEEL CHANNEL STUDS. WOOD STUDS TO CONSIST OF NOM 2 BY 4 IN. LUMBER SPACED 16 IN. OC WITH NOM 2 BY 4 IN. LUMBER END PLATES AND CROSS BRACES. STEEL STUDS TO BE MIN 3-5/8 IN. WIDE BY 1-3/8 IN. DEEP CHANNELS SPACED MAX 24 IN. OC.
   B. GYPSUM BOARD* – NOM 1/2 OR 5/8 IN. THICK, 4 FT. WIDE WITH SQUARE OR TAPERED EDGES. THE GYPSUM WALLBOARD TYPE, THICKNESS, NUMBER OF LAYERS, FASTENER TYPE AND SHEET ORIENTATION SHALL BE AS SPECIFIED IN THE INDIVIDUAL U300 OR U400 SERIES DESIGN IN THE UL FIRE RESISTANCE DIRECTORY. MAX DIAM OF OPENING IS 26 IN.
2. THROUGH-PENETRANT – ONE METALLIC PIPE, CONDUIT OR TUBING INSTALLED EITHER CONCENTRICALLY OR ECCENTRICALLY WITHIN THE FIRESTOP SYSTEM. THE ANNULAR SPACE BETWEEN PIPE, CONDUIT OR TUBING AND PERIPHERY OF OPENING SHALL BE MIN OF 0 IN. TO MAX 2 IN. PIPE, CONDUIT OR TUBING TO BE RIGIDLY SUPPORTED ON BOTH SIDES OF WALL ASSEMBLY. THE FOLLOWING TYPES AND SIZES OF METALLIC PIPES, CONDUITS OR TUBING MAY BE USED:
   A. CONDUIT – NOM 6 IN. DIAM (OR SMALLER) STEEL CONDUIT, NOM 4 IN. DIAM (OR SMALLER) STEEL ELECTRICAL METALLIC TUBING.
3. FILL, VOID OR CAVITY MATERIAL* – CAULK OR SEALANT – MIN 5/8, 1-1/4, 1-7/8 AND 2-1/2 IN. THICKNESS OR CAULK FOR 1, 2, 3 AND 4 RATED ASSEMBLIES, RESPECTIVELY, APPLIED WITHIN ANNULUS, FLUSH WITH BOTH SURFACES OF WALL. MIN 1/4 IN. DIAM. BEAD OF CAULK APPLIED TO GYPSUM BOARD/PENETRANT INTERFACE AT POINT CONTACT LOCATION ON BOTH SIDES OF WALL. THE HOURLY F RATING OF THE FIRESTOP SYSTEM IS DEPENDENT UPON THE HOURLY FIRE RATING OF THE WALL ASSEMBLY IN WHICH IT IS INSTALLED, AS SHOWN IN THE FOLLOWING TABLE. THE HOURLY T RATING OF THE FIRESTOP SYSTEM IS DEPENDENT UPON THE TYPE OR SIZE OF THE PIPE OR CONDUIT AND THE HOURLY FIRE RATING OF THE WALL ASSEMBLY IN WHICH IT IS INSTALLED, AS TABULATED BELOW:

MAX CONDUIT DIAMETER, IN.	F RATING HR	T RATING, HR
1	1 OR 2	1 OR 2
1	3 OR 4	3 OR 4
4	1 OR 2	0
6	3 OR 4	0
12	1 OR 2	0

3M COMPANY – CP 25WB+ OR FB-3000 WT.

* BEARING THE UL CLASSIFICATION MARK.

1 THROUGH-PENETRATION FIRESTOP SYSTEMS

NOT TO SCALE

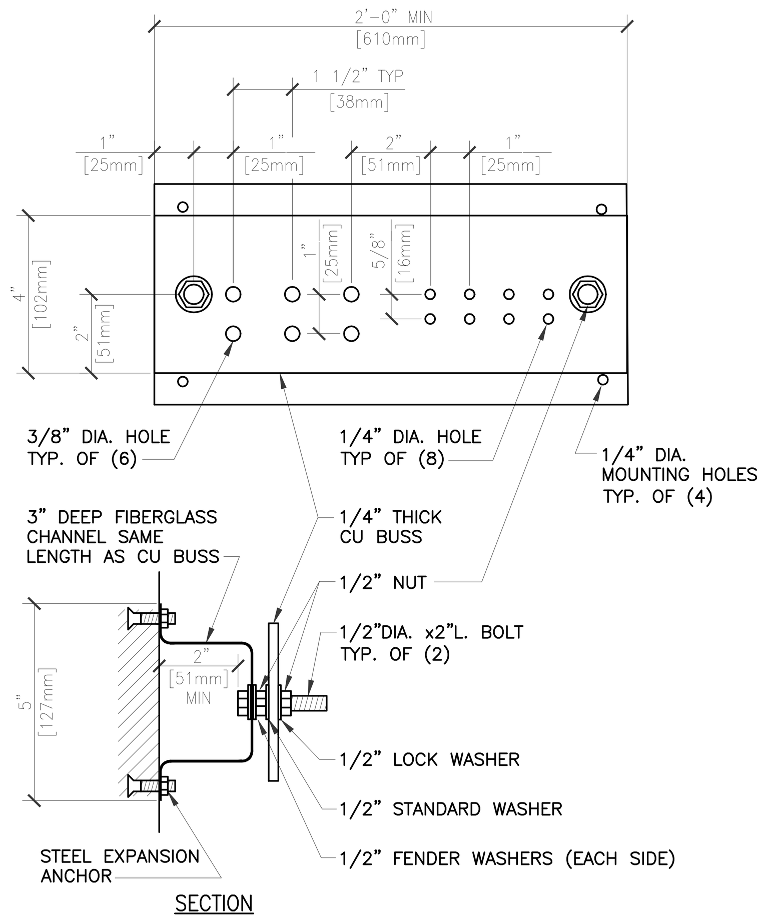

GENERAL NOTES

1. ALL HARDWARE SHOWN SHALL BE STAINLESS STEEL.
2. PROVIDE 1 MOUNTING POINT PER 12" OF BAR LENGTH.
3. HOLES MAY BE ADDED IF REQUIRED.

2 MASTER GROUND BAR DETAIL

NOT TO SCALE

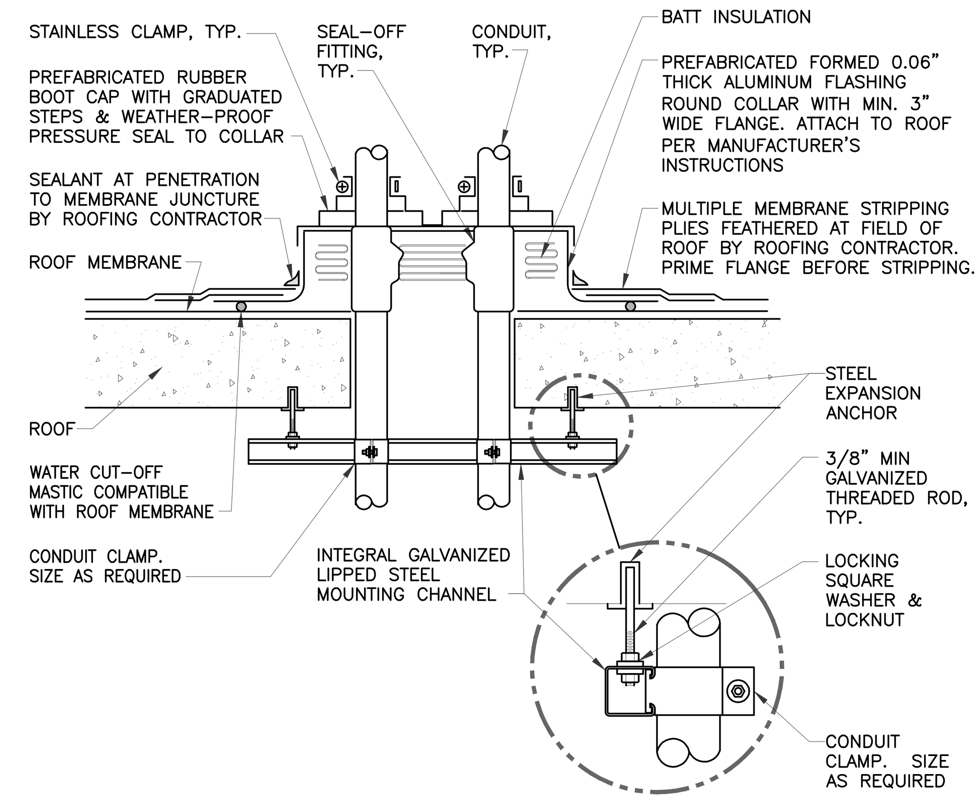

GENERAL NOTES:

1. MAINTAIN A MINIMUM CLEARANCE OF 12" [308mm] ON ALL SIDES OF ROOF PENETRATION FROM WALLS, CURBS, AND OTHER PROJECTIONS TO FACILITATE PROPER FLASHING.
2. FLANGES OF ADJACENT FLASHINGS SHALL NOT BE CUT OR OVERLAPPED.
3. VERIFY ROOF & STRUCTURAL SYSTEM WITH ARCHITECT.
4. COORDINATE FLASHING INSTALLATION WITH ROOFING CONTRACTOR TO ENSURE PROPER METHODS & MATERIALS ARE USED TO MAINTAIN ROOF WARRANTY.

3 ROOF PENETRATION DETAIL

NOT TO SCALE

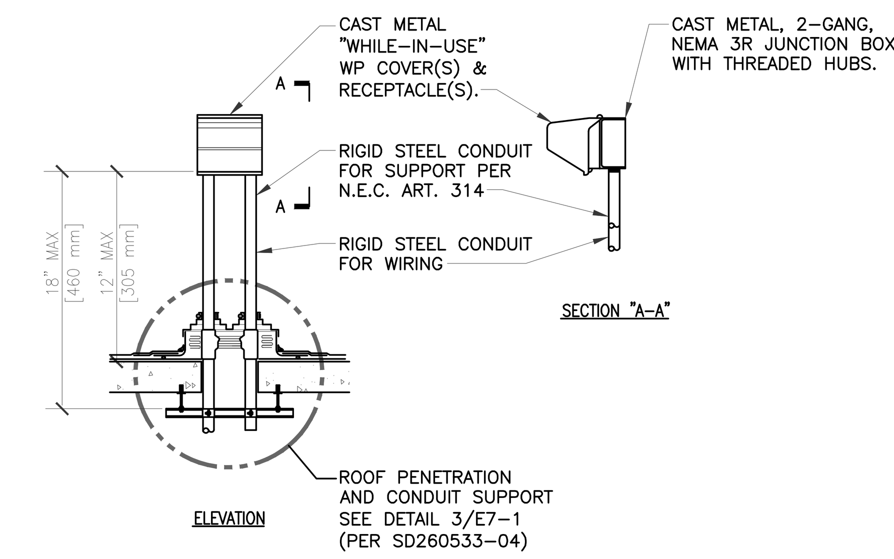

4 RECEPTACLE ROOF MOUNTING DETAIL

NOT TO SCALE

[FOR PENETRATIONS CONTAINED AND LOCATED WITHIN THE CAVITY OF A WALL ABOVE OR BELOW FLOOR PER CBC 713.4.1.1.2]

UL SYSTEM NO. C-AJ-1001

F-RATING = 3-HR.
T-RATING = 0-HR.
W Rating – Class 1 (See Item 4)

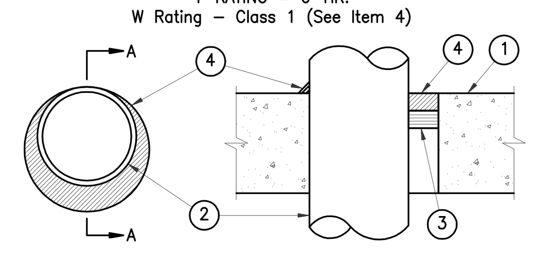

FRONT VIEW SECTION A-A

1. FLOOR OR WALL ASSEMBLY – MINIMUM 4-1/2 INCHES THICK LIGHTWEIGHT OR NORMAL WEIGHT (100-150 PCF) CONCRETE. WALL MAY ALSO BE CONSTRUCTED OF ANY UL CLASSIFIED CONCRETE BLOCKS*. MAX DIAM OF CIRCULAR THROUGH OPENING IS 32-1/2 IN. SEE CONCRETE BLOCKS (CAZT) CATEGORY IN THE FIRE RESISTANCE DIRECTORY FOR NAMES OF MANUFACTURERS.
   1A. STEEL SLEEVE –(OPTIONAL, NOT SHOWN) – NOM 12 INCHES DIAM (OR SMALLER) SCHEDULE 40 (OR HEAVIER) STEEL PIPE SLEEVE CAST INTO CONCRETE FLOOR OR WALL. SLEEVE TO BE FLUSH WITH OR PROJECT MAX 2 IN. FROM TOP SURFACE OR FROM BOTH SURFACES OF WALL.
2. THROUGH – PENETRANT – ONE METALLIC PIPE, CONDUIT OR TUBING INSTALLED EITHER CONCENTRICALLY OR ECCENTRICALLY WITHIN THE FIRESTOP SYSTEM. THE ANNULAR SPACE BETWEEN PIPE, CONDUIT OR TUBING AND PERIPHERY OF OPENING SHALL BE MIN OF 0 IN. (POINT CONTACT) TO MAX 1-3/8 IN. PIPE, CONDUIT OR TUBING TO BE RIGIDLY SUPPORTED ON BOTH SIDES OF WALL ASSEMBLY. THE FOLLOWING TYPES AND SIZES OF METALLIC PIPES, CONDUITS OR TUBING MAY BE USED:
   A. STEEL PIPE – NOM 30 IN. DIAM (OR SMALLER) SCHEDULE 10 (OR HEAVIER) STEEL PIPE.
      A1. IRON PIPE – NOM 30 IN. DIAM (OR SMALLER) CAST OR DUCTILE IRON PIPE.
   B. CONDUIT – NOM 6 IN. DIAM (OR SMALLER) RIGID STEEL CONDUIT.
   C. CONDUIT – NOM 4 IN. DIAM (OR SMALLER) STEEL ELECTRICAL METALLIC TUBING.
3. PACKING MATERIAL – POLYETHYLENE BACKER ROD OR NOM. 1 INCH THICKNESS OF TIGHTLY-PACKED CERAMIC (ALUMINA SILICA) FIBER BLANKET, MINERAL WOOL BATT OR GLASS FIBER INSULATION MATERIAL USED AS A PERMANENT FORM. PACKING MATERIAL TO BE RECESSED FROM TOP SURFACE OF FLOOR OR FROM BOTH SURFACES OF SOLID CONCRETE OR CONCRETE BLOCK WALL AS REQUIRED TO ACCOMMODATE THE REQUIRED THICKNESS OF CAULK FILL MATERIAL (ITEM 4). AS AN ALTERNATE WHEN MAX. PIPE SIZE IS 10 IN. DIAM AND WHEN MAX. ANNULAR SPACE IS 1 INCH, A MINIMUM 1 INCH THICKNESS OF TIGHTLY-PACKED ERAMIC FIBER BLANKET OR MINERAL WOOL BATT PACKING MATERIAL MAY BE RECESSED MIN 1/2 INCH FROM BOTTOM SURFACE OF FLOOR OR FROM EITHER SIDE OF SOLID CONCRETE WALL.
4. FILL, VOID OR CAVITY MATERIAL* – CAULK – APPLIED TO FILL THE ANNULAR SPACE TO MIN THICKNESS SHOWN IN THE FOLLOWING TABLE:

MAX PIPE DIAM IN.	MAX ANNULAR SPACE IN.	PACKING MTL TYPE (A)	MIN CAULK THKNS IN.
10	1	BR, CF, GF OR MW	1/2 (B)
10	1	CF OR MW	1/2 (C)
20	2-1/2	BR, CF, GF OR MW	1 (B)

(A) BR = POLYETHYLENE BACKER ROD.
CF = CERAMIC FIBER BLANKET.
GF = GLASS FIBER INSULATION.
MW = MINERAL-WOOL BATT.
(B) CAULK INSTALLED FLUSH WITH TOP OF SURFACE OF FLOOR OR BOTH SURFACES OF WALL.
(C) CAULK INSTALLED FLUSH WITH BOTTOM SURFACE OF FLOOR OR ONE SURFACE OF SOLID (NON-CONCRETE BLOCK) WALL.

3M COMPANY – TYPE CP 25WB+ OR FB-3000 WT
(NOTE – W RATING APPLIES ONLY WHEN FB-3000 WT IS USED.)

* BEARING THE UL CLASSIFICATION MARK

NOTE:

IN LIEU OF USING A THROUGH PENETRATION FIRE STOP SYSTEM AT PENETRATIONS REQUIRING A 'T' RATING OCCURRING OUTSIDE THE CAVITY OF A WALL, PENETRATIONS IN A SINGLE CONCRETE FLOOR BY CONDUIT WITH A MAXIMUM 6" NOMINAL DIAMETER ARE ACCEPTABLE, PROVIDED CONCRETE, GROUT OR MORTAR IS INSTALLED THE FULL THICKNESS OF THE FLOOR, PER CBC 713.4.1.1, EXCEPTION 2.

5 CONDUIT PENETRATION DETAIL (Concrete)

NOT TO SCALE

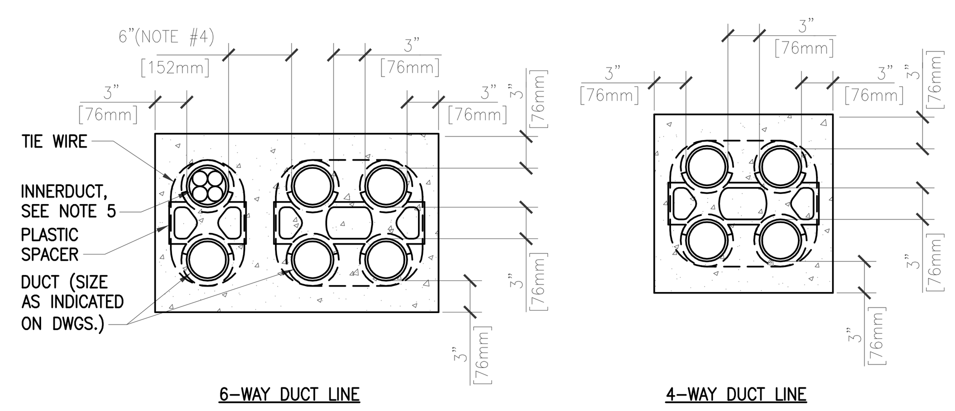

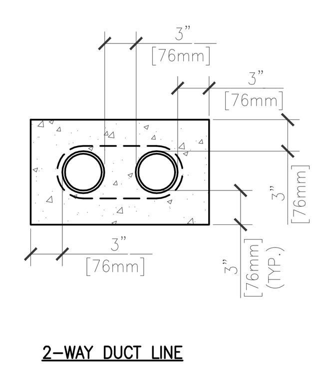

NOTES:

1. CONCRETE SHALL BE 2000 P.S.I. @ 28 DAYS, OR AS SPECIFIED.
2. PROVIDE REINFORCING RODS ON TOP AND BOTTOM OF DUCTS WHEN CROSSING OR PLACED IN ROADWAYS.
3. MINIMUM COVER TO TOP OF ENVELOPE SHALL BE 24" [610mm].
4. PROVIDE MINIMUM 6" [152mm] SPACE BETWEEN POWER AND TELECOMMUNICATION DUCTS. INCREASE SIZE AS REQUIRED.
5. INNERDUCT QUANTITY AND SIZE AS INDICATED ON PLANS.

6 DUCT BANK DETAILS

NOT TO SCALE

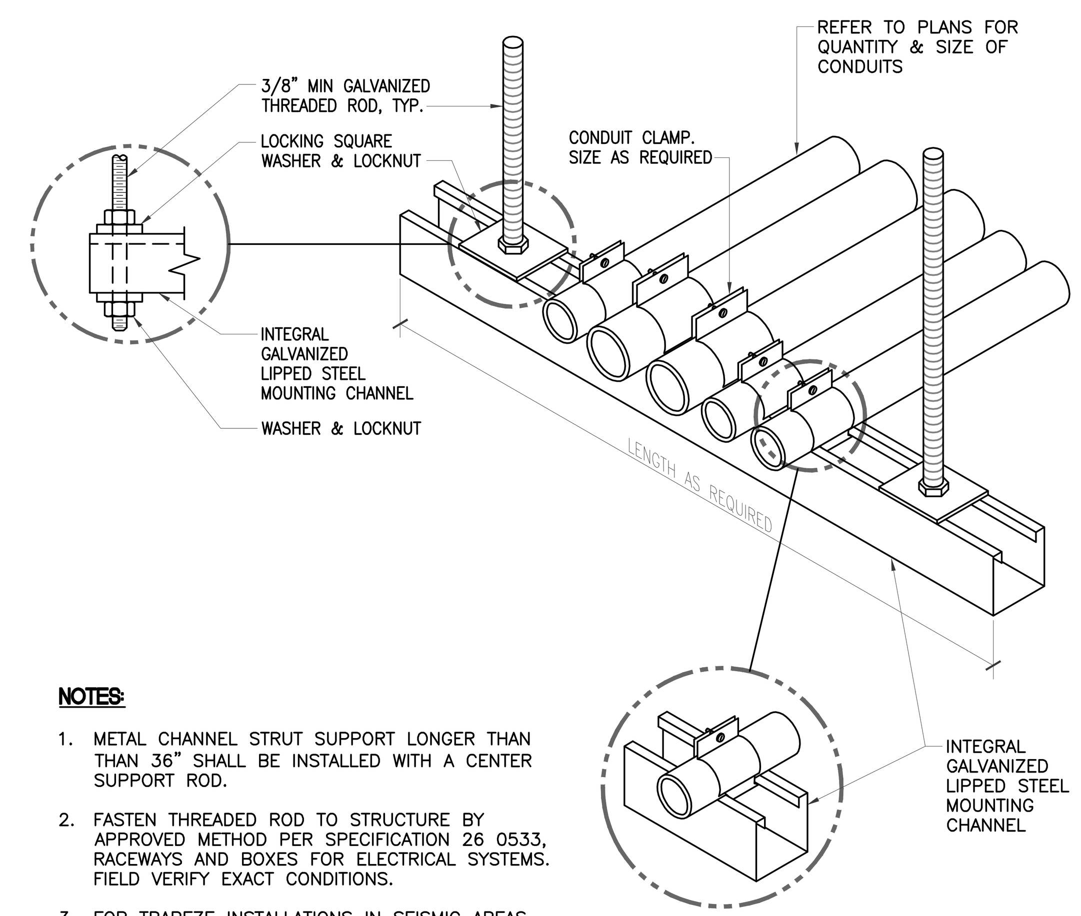

NOTES:

1. METAL CHANNEL STRUT SUPPORT LONGER THAN THAN 36" SHALL BE INSTALLED WITH A CENTER SUPPORT ROD.
2. FASTEN THREADED ROD TO STRUCTURE BY APPROVED METHOD PER SPECIFICATION 26 0533, RACEWAYS AND BOXES FOR ELECTRICAL SYSTEMS. FIELD VERIFY EXACT CONDITIONS.
3. FOR TRAPEZE INSTALLATIONS IN SEISMIC AREAS REFER TO SPECIFICATION SECTION 10 05 41, SEISMIC RESTRAINT REQUIREMENTS FOR NON-STRUCTURAL COMPONENTS.

7 CONDUIT TRAPEZE MOUNTING DETAIL

NOT TO SCALE

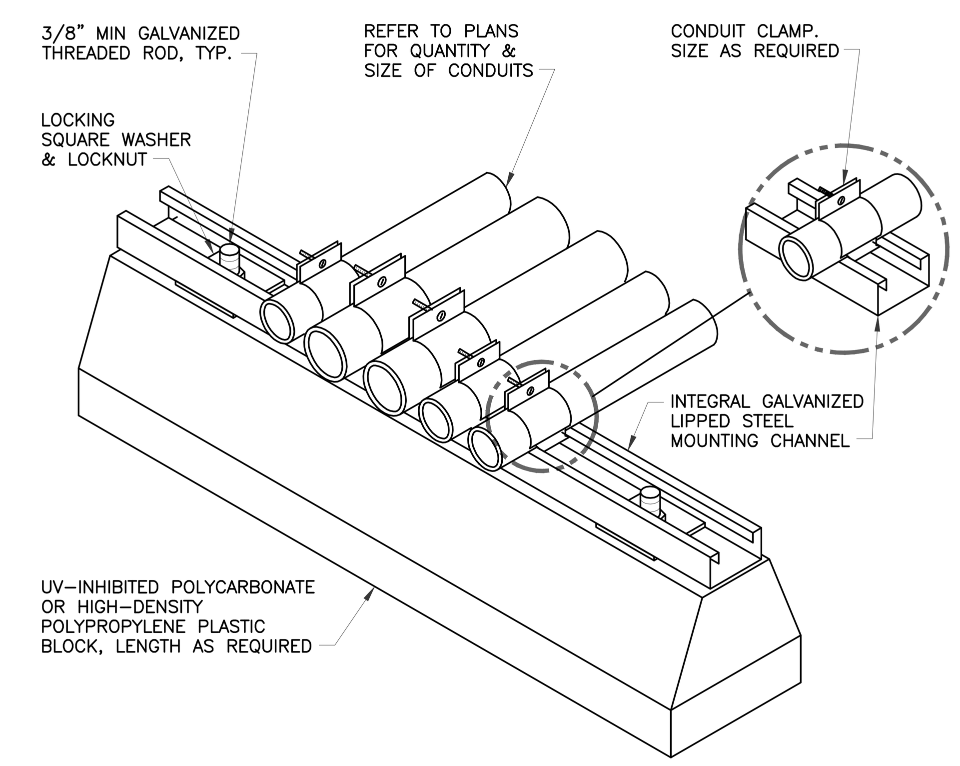

8 ROOF CONDUIT SUPPORT DETAIL

NOT TO SCALE

Issues & Revisions:	Date

CONSULTANTS:

TED JACOB ENGINEERING GROUP
LEADING BY INNOVATION
JOB NO. MEI-001
1763 BROADWAY, OAKLAND, CA 94612-2105
(510) 763-4880 FAX (510) 763-5099

Copyright © 2013 Ted Jacob Engineering Group. All rights reserved. No part of this work may be reproduced, changed, copied or transmitted in any form or by any means, electronic or mechanical, including, but not retrieval system, except as may be expressly permitted in writing from TJEG.

REGISTERED PROFESSIONAL ENGINEER
No.E014431
Exp. 6-30-14
STATE OF CALIFORNIA

KEY PLAN

ARCHITECT/ENGINEERS:

IMEI
architecture + interiors
239 9TH STREET, SUITE 201
SAN FRANCISCO, CA 94103
T (415) 682-7376 F (415) 682-7339

Drawing Title: DETAILS

Approved: Project Director

Project Title: CONSOLIDATE / EXPAND MEDICAL PROCEDURES MINOR (CEMP)

Location: VANCHCS - MATHER, CA

Date: APRIL 22, 2014 | Checked: JL | Drawn: SU

Project Number: 612-111

Building Number

Drawing Number: E7-1

Dwg. -- of --

Office of Facilities Management

Department of Veterans Affairs

VA FORM 08-6231, OCT 1978 04/28/2014 1:41:42 PM

FULLY SPRINKLERED 100% CONSTRUCTION DOCUMENTS

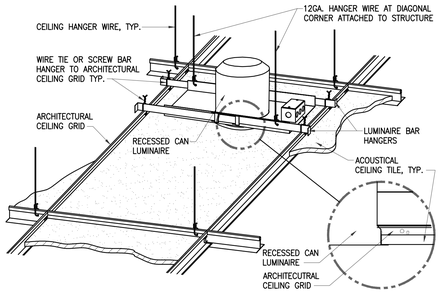

LAY-IN CEILING

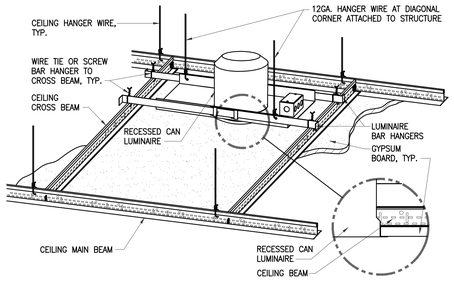

GYPBOARD CEILING

1 DOWNLIGHT FIXTURE MOUNTING DETAIL

NOT TO SCALE

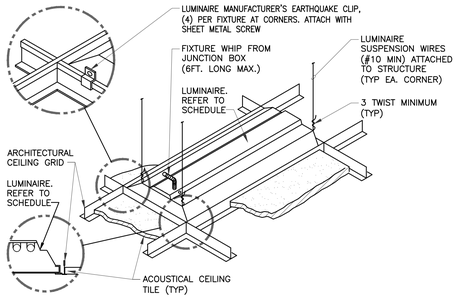

LAY-IN CEILING

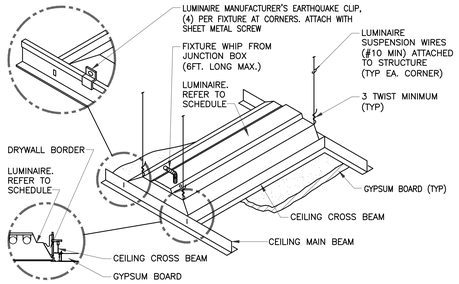

GYPBOARD CEILING

2 RECESSED LIGHT FIXTURE MOUNTING DETAIL

NOT TO SCALE

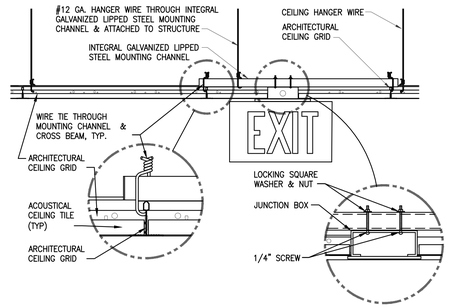

LAY-IN CEILING

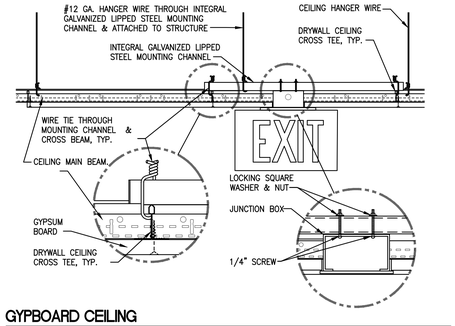

GYPBOARD CEILING

3 EXIT SIGN MOUNTING DETAIL

NOT TO SCALE

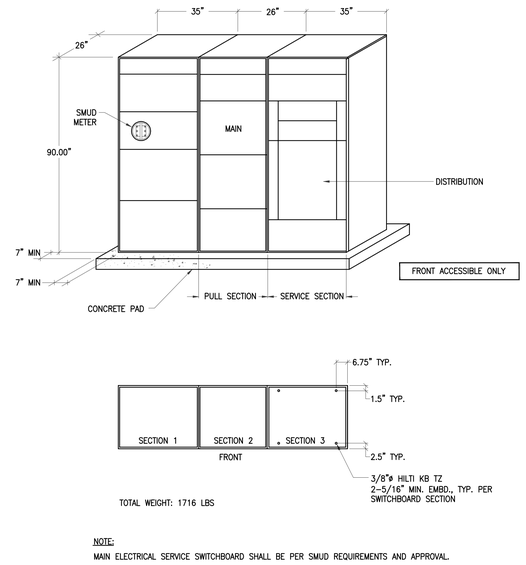

TOTAL WEIGHT: 1716 LBS

NOTE:

MAIN ELECTRICAL SERVICE SWITCHBOARD SHALL BE PER SMUD REQUIREMENTS AND APPROVAL.

4 MAIN ELECTRICAL SERVICE SWITCHBOARD

NOT TO SCALE

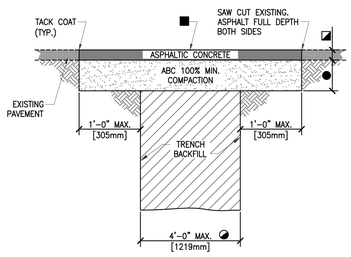

◐ FOR TRENCH WIDTHS EXCEEDING 4' [1219mm] REFER TO VA STANDARD DETAIL 32 12 16-02 "TYPE 2 UTILITY TRENCH PATCH".
FOR TRENCH WHERE PORTLAND CEMENT CONCRETE (PCC) PAVEMENT EXISTS, REFER TO 32 12 16-03 "TYPE 3 UTILITY TRENCH PATCH".

◪ 2" [50mm] MINIMUM OR THICKNESS OF EXISTING PAVEMENT WHICHEVER IS GREATER.

■ BITUMINOUS SURFACE TREATMENT (CHIPSEAL) REQUIRED ONLY FOR LONGITUDINAL TRENCHES WITH WIDTHS GREATER THAN 6' [1829mm].

● 4" [100mm] MINIMUM ABC OR THICKNESS OF EXISTING GRANULAR BASE COURSE MATERIALS (E.G. ABC & SELECT MATERIAL) WHICHEVER IS GREATER.

REFER TO VA STANDARD DETAIL 32 12 16-04 "UTILITY TRENCH PAVEMENT PATCH NOTES" FOR ADDITIONAL INFORMATION.

5 TYPE 1 UTILITY TRENCH PATCH DETAIL

NOT TO SCALE

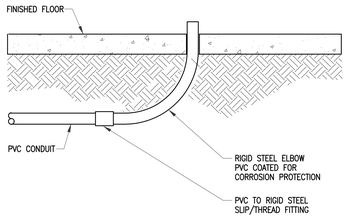

6 UNDERGROUND PVC CONDUIT STUB UP

NOT TO SCALE

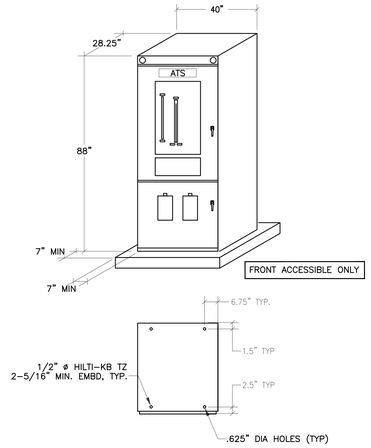

TOTAL WEIGHT: 2000 LBS

7 AUTOMATIC TRANSFER SWITCH MOUNTING DETAIL

NOT TO SCALE

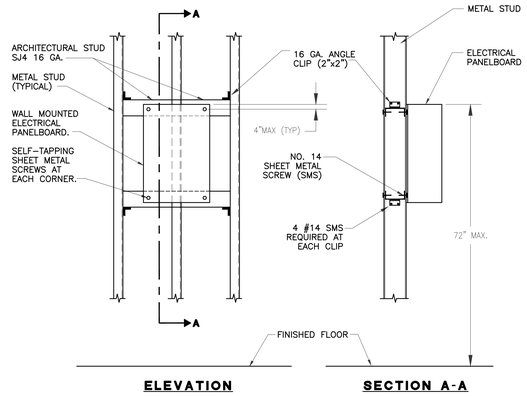

ELEVATION

SECTION A-A

TOTAL WEIGHT: 300 LBS. MAX.

8 PANELBOARD MOUNTING DETAIL

NOT TO SCALE

Issues & Revisions:	Date

CONSULTANTS:

TED JACOB ENGINEERING GROUP
LEADING BY INNOVATION
JOB NO. MEI-001
1763 BROADWAY, OAKLAND, CA 94612-2105
(510) 763-4880 FAX (510) 763-5099

Copyright © 2013 Ted Jacob Engineering Group. All rights reserved. No part of this work may be reproduced, changed, copied or transmitted in any form or by any means, electronic or mechanical, including, but not retrieval system, except as may be expressly permitted in writing from TJEG.

REGISTERED PROFESSIONAL ENGINEER OCTAVIAN J. DIPAOS No.E014431 Exp. 6-30-14 CIVIL STATE OF CALIFORNIA

KEY PLAN

ARCHITECT/ENGINEERS:

MEI architecture + interiors
239 9TH STREET, SUITE 201
SAN FRANCISCO, CA 94103
T (415) 682-7376 F (415) 682-7339
www.meiarchitects.com

Drawing Title: **DETAILS**

Approved: Project Director

Project Title: **CONSOLIDATE / EXPAND MEDICAL PROCEDURES MINOR (CEMP)**

Location: **VANCHCS - MATHER, CA**

Date: **APRIL 22, 2014** | Checked: **JL** | Drawn: **SU**

Project Number: **612-111**

Building Number:

Drawing Number: **E7-2**
Dwg. -- of --

Office of Facilities Management
Department of Veterans Affairs

VA FORM 08-6231, OCT 1978 04/28/2014 1:42:19 PM

FULLY SPRINKLERED **100% CONSTRUCTION DOCUMENTS**

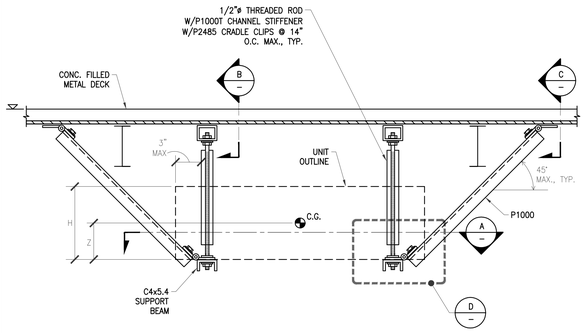

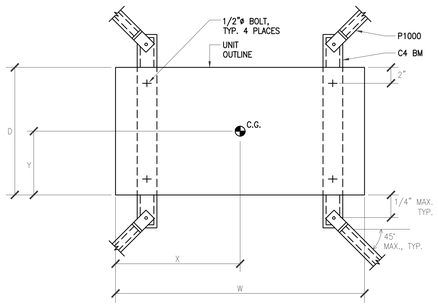

A PLAN

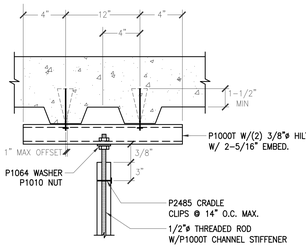

B SECTION

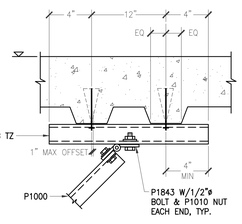

C SECTION

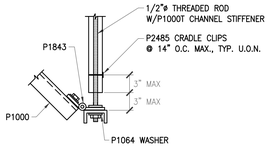

D SECTION

1 CEILING MOUNTED TRANSFORMER
NOT TO SCALE

TRANSFORMER DIMENSION				
KVA	W	D	H	WEIGHT
75	31.8"	24"	35.7"	690LBS.

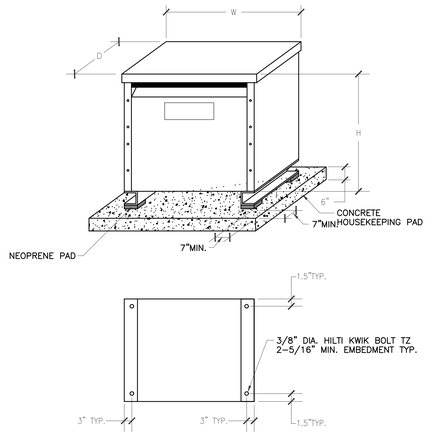

2 FLOOR MOUNTED TRANSFORMER
NOT TO SCALE

3 DETAIL
NOT TO SCALE

4 DETAIL
NOT TO SCALE

5 DETAIL
NOT TO SCALE

6 DETAIL
NOT TO SCALE

7 DETAIL
NOT TO SCALE

Issues & Revisions:	Date

CONSULTANTS:

TED JACOB ENGINEERING GROUP
LEADING BY INNOVATION
JOB NO. MEI-001
1763 BROADWAY, OAKLAND, CA 94612-2105
(510) 763-4880 FAX (510) 763-5099

Copyright © 2013 Ted Jacob Engineering Group. All rights reserved. No part of this work may be reproduced, changed, copied or transmitted in any form or by any means, electronic or mechanical, including, but not retrieval system, except as may be expressly permitted in writing from TJEG.

REGISTERED PROFESSIONAL ENGINEER
OCTAVIAN J. DRAGOS
No.E014431
Exp. 6-30-14
CIVIL
STATE OF CALIFORNIA

KEY PLAN

ARCHITECT/ENGINEERS:

MEI architecture + interiors
239 9TH STREET, SUITE 201
SAN FRANCISCO, CA 94103
T (415) 682-7376 F (415) 682-7339
www.meiarchitects.com

Drawing Title
DETAILS

Approved: Project Director

Project Title
CONSOLIDATE / EXPAND MEDICAL PROCEDURES MINOR (CEMP)

Location
VANCHCS - MATHER, CA

Date **APRIL 22, 2014** | Checked **JL** | Drawn **SU**

Project Number **612-111**

Building Number

Drawing Number
E7-3
Dwg. -- of --

Office of Facilities Management

Department of Veterans Affairs

VA FORM 08-6231, OCT 1978

04/28/2014 1:42:44 PM

FULLY SPRINKLERED

100% CONSTRUCTION DOCUMENTS