# TELECOMMUNICATIONS TITLE SHEET

## CONVENTIONS

NOT ALL SYMBOLS MAY BE USED

1 — EQUIPMENT IDENTIFICATION TAG

1.01 — KEYNOTE

1 / TN1.1 — DETAIL REFERENCE
- SHEET NUMBER (TN=TELECOMMUNICATIONS)
- DETAIL DESIGNATION

1 / TN1.1 — ELEVATION REFERENCE
- SHEET NUMBER (TN-TELECOMMUNICATIONS)
- DETAIL DESIGNATION

## POWER & LIGHTING

NOT ALL SYMBOLS MAY BE USED

- DUPLEX CONVENIENCE OUTLET, WALL MOUNTED +18 UON
- DUPLEX CONVENIENCE OUTLET, WALL MOUNTED +18 UON. CONNECTED TO "STANDBY" POWER SYSTEM
- DOUBLE DUPLEX CONVENIENCE OUTLET, WALL MOUNTED +18 UON. CONNECTED TO NORMAL POWER SYSTEM
- DOUBLE DUPLEX CONVENIENCE OUTLET, WALL MOUNTED +18 UON. CONNECTED TO "STANDBY" POWER SYSTEM
- SPECIALTY OUTLET WALL MOUNTED +18 UON, TYPE AS SPECIFIED BY NUMBERED NOTE.
- DUPLEX CONVENIENCE OUTLET, FLOOR MONUMENT
- FOURPLEX CONVENIENCE OUTLET, FLOOR MONUMENT
- FLOOR MOUNTED FOURPLEX POWER RECEPTACLE
- FLOOR MOUNTED DUPLEX POWER RECEPTACLE
- FURNITURE POWER OR RACEWAY FEED POINT WALL MOUNTED +18 AFF
- FURNITURE POWER FEED POINT FLUSH MOUNTED FLOOR BOX
- FURNITURE POWER FEED FLOOR MONUMENT
- FLOOR MOUNTED JUNCTION BOX
- JUNCTION BOX MOUNTED ABOVE ACCESSIBLE CEILING
- WALL MOUNTED JUNCTION BOX +18 AFF UON
- S — SINGLE POLE TOGGLE SWITCH, WALL MOUNTED +42 UON
- POWER POLE WITH SEPARATE POWER AND TELECOMMUNICATIONS FEEDS
- TGBB — TELECOMMUNICATIONS GROUNDING BUS, +84 AFF UON
- FLUORESCENT STRIPLIGHT FIXTURE, SURFACE OR PENDANT MOUNTED
- SHADING OF ANY FIXTURE INDICATES CONNECTION TO "STANDBY POWER" OR CONTAINING AN EMERGENCY POWERED BALLAST

PANELBOARD, WALL MOUNTED (PLAN VIEW)

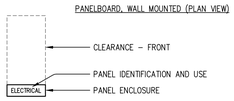


## TELECOMMUNICATIONS

NOT ALL SYMBOLS MAY BE USED

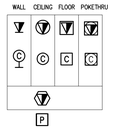


NOTE: REFER TO OUTLET SCHEDULE FOR ADDITIONAL INFORMATION

TELECOMMUNICATIONS OUTLET SYMBOL ATTRIBUTE DENOTES OUTLET CONFIGURATION

TELECOM FEED POINT TO FURNITURE OR RACEWAY DENOTES DEVICE CONFIGURATION

SECURITY IP CAMERA SYMBOL ATTRIBUTE DENOTES DEVICE CONFIGURATION. (REFER TO SECURITY DRAWINGS FOR ADDITIONAL INFORMATION)

PULLBOX SIZE AND TYPE SPECIFIED BY NUMBERED NOTE

2-POST EQUIPMENT RACK (PLAN VIEW)

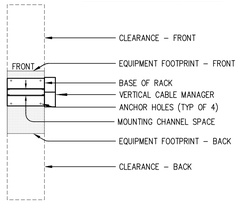


IDF–X1–XC1 TELECOMMUNICATION EQUIPMENT ROOM DESIGNATIONS
- ROOM TYPE – TELECOM (T) OR SIGNAL (S)
- FLOOR #
- BUILDING SECTION (A OR B)
- DISTRIBUTION FACILITY
- CLASSIFICATION
  - M = MAIN
  - I = INTERMEDIATE

## PATHWAYS

NOT ALL SYMBOLS MAY BE USED

- UNDERGROUND TELECOMMUNICATION CONDUIT DUCT BANK.
- CONDUIT RUN EXPOSED ON WALL OR CEILING.
- CONDUIT RUN CONCEALED IN SLAB, UNDER SLAB OR UNDERGROUND.
- CONDUIT RUN CONCEALED IN WALL OR CEILING.
- CONDUIT HOMERUN, CONTINUOUS RUN TO PANEL OR EQUIPMENT CABINET.
- FLEXIBLE METALLIC CONDUIT.
- CONDUIT TURNED UP.
- CONDUIT TURNED DOWN.
- MULTI-OUTLET SURFACE RACEWAY; TYPE, OUTLET SPACING AND MOUNTING AS INDICATED BY NUMBERED NOTE.
- "LADDER STYLE" CABLE TRAY SUSPENDED FROM STRUCTURE ABOVE, UON.
- CABLE RUNWAY (LADDER-RACK) SUSPENDED FROM STRUCTURE ABOVE, UON.
- CABLE TRAY WITH SOLID BOTTOM AND SOLID TOP, SUSPENDED FROM STRUCTURE ABOVE, UON.
- "BASKET STYLE" CABLE TRAY, SUSPENDED FROM STRUCTURE ABOVE, UON.
- MAIN CABLE HANGER ROUTE
- CONDUIT STUB THROUGH WALL OR FLOOR, NUMBERS INDICATE SIZE AND QUANTITY.
- "EZ-PATH" TYPE FIRESTOP DEVICE, NOTES INDICATE SIZE AND QUANTITY.

## GENERAL NOTES

APPLIES TO ALL SHEETS

GENERAL:

1. THE PURPOSE OF THIS SHEET IS TO ILLUSTRATE AND DEFINE TYPICAL GRAPHIC SYMBOLS, AND SYSTEMS OF GRAPHIC SYMBOLS, WHICH MAY OCCUR ON THE TELECOMMUNICATIONS DRAWINGS. THE ILLUSTRATION OF A SYMBOL, OR SYSTEM OF SYMBOLS, ON THIS SHEET DOES NOT NECESSARILY INDICATE THAT THE BUILDING ITEM OF THE DESCRIBED SYSTEM BY THE SYMBOL IS USED AS PART OF THIS PROJECT. REFER TO THE PLANS, ELEVATIONS, SECTIONS, SCHEDULES, DETAILS, AND SPECIFICATIONS TO DETERMINE THE SCOPE OF THE WORK.
2. THE WORK – INCLUDING MATERIALS, METHODS, ASSEMBLIES, ETC – SHALL COMPLY WITH THE MINIMUM REQUIREMENTS OF THE GOVERNING LAWS, ORDINANCES, AND REGULATIONS OF ALL FEDERAL, STATE, DISTRICT, AND LOCAL AUTHORITIES HAVING JURISDICTION OVER THE PROJECT, AS WELL AS THOSE GREATER REQUIREMENTS INDICATED BY THE CONTRACT DOCUMENTS. NO PART OF THE CONTRACT DOCUMENTS MAY BE CONSTRUED TO REQUIRE OR PERMIT WORK CONTRARY TO A GOVERNING LAW, ORDINANCE, OR REGULATION.
3. THE TELECOMMUNICATIONS DRAWINGS ARE PART OF A LARGER SET OF DRAWINGS WHICH, WHEN COMPLETE, CONSISTS OF DRAWINGS LISTED BY THE "INDEX OF DRAWINGS". THE WORK DESCRIBED BY THE DRAWINGS OF ANY ONE DISCIPLINE MAY BE AFFECTED BY THE WORK AND REQUIREMENTS DESCRIBED ON DRAWINGS OF ANOTHER DISCIPLINE AND MAY REQUIRE REFERENCE TO THE DRAWINGS OF ANOTHER DISCIPLINE. PARTIAL SETS OF DRAWINGS ARE INCOMPLETE AND SHOULD NOT BE DISTRIBUTED OR UTILIZED BY THE CONTRACTOR. MANAGE, SUPERVISE, REVIEW, AND COORDINATE THE WORK OF SUB-CONTRACTORS, TRADES, AND SUPPLIERS WITH THE REQUIREMENTS OF THE CONTRACT DOCUMENTS BEFORE COMMENCING CONSTRUCTION AND TO ASSURE THAT PARTIES ARE AWARE OF REQUIREMENTS, REGARDLESS OF WHERE THE REQUIREMENTS OCCUR IN THE CONTRACT DOCUMENTS, WHICH MAY AFFECT THE WORK OF THAT PARTY.
4. THE ARCHITECTURAL DRAWINGS ESTABLISH AND COORDINATE THE FINISHED APPEARANCE AND EXACT LOCATION OF EXPOSED ELEMENTS OF THE WORK OF TRADES, INCLUDING THAT WORK THAT IS ILLUSTRATED PRIMARILY ON THESE DRAWINGS. LOCATIONS SHOWN ON THESE DRAWINGS ARE DIAGRAMMATIC. REFER TO ARCHITECTURAL DRAWINGS FOR DIMENSIONED LOCATIONS.
5. MAINTAIN A COPY OF THE SPECIFICATIONS AND DRAWINGS AT THE JOB SITE. PRESENT THE SPECIFICATIONS AND DRAWINGS UPON REQUEST. MAINTAIN DAILY MARKUPS OF ACTUAL INSTALLATION AND PRESENT FOR REVIEW UPON REQUEST.
6. REFER TO WRITTEN SPECIFICATIONS FOR PROJECT SCOPE, GENERAL REQUIREMENTS, PRODUCT SPECIFICATIONS, AND INSTALLATION REQUIREMENTS. WHERE QUANTITY AND QUALITY DIFFER, THE HIGHER OF EACH SHALL PREVAIL.
7. PROVIDE NECESSARY EQUIPMENT AND ACCESSORIES FOR A FULLY FUNCTIONAL SYSTEM THAT MEETS INTENDED DESIGN WHETHER EXPRESSLY SPECIFIED OR NOT.
8. PROVIDE MATERIALS AND EQUIPMENT LISTED BY UNDERWRITERS LABORATORIES FOR THE PURPOSE USED AND BEARING THEIR LABEL.
9. PRIOR TO PERFORMING WORK, IMMEDIATELY NOTIFY THE VA COR, IN WRITING OF OBSERVATIONS OR CONDITIONS DISCOVERED THAT WOULD PREVENT INSTALLATION ACCORDING TO DRAWINGS AND SPECIFICATIONS.
10. BRING A SET OF MARKED UP PLANS TO WEEKLY CONSTRUCTION MEETINGS FOR VA COR, APPROVAL PRIOR TO PRODUCTION OF AS-BUILT DRAWINGS FOR RECORD DOCUMENTATION.
11. REMOVE ABANDONED CABLING LEFT OVER CONDUIT, WIRE, SCRAPS, ETC. LEAVE PREMISES CLEAN AND FREE OF TRASH OR DEBRIS RESULTING FROM WORK AND PROPERLY RECYCLE APPLICABLE MATERIAL ACCORDING TO ALL CODE REQUIREMENTS FOR SUCH MATERIAL.

TELECOMMUNICATIONS PATHWAYS:

12. INSTALL EQUIPMENT, DEVICES, AND PATHWAYS, SUCH AS CABLE TRAY, RUNWAY, CONDUITS, CABLE HANGERS, AND PULLBOXES, ETC., ACCORDING TO STATE AND LOCAL CODES AND REGULATORY REQUIREMENTS FOR SEISMIC BRACING.
13. CONDUIT ROUTING, WHERE SHOWN ON DRAWINGS, IS DIAGRAMMATIC IN NATURE. FIELD DETERMINE CONDUIT ROUTES TO SUIT FIELD CONDITIONS WHILE CONFORMING TO SPECIFICATIONS. PREPARE SHOP DRAWINGS SHOWING EXACT CONDUIT ROUTES, INDICATING PENETRATION TYPES (e.g., FRAMED WALL, CONCRETE WALL, ETC.). COORDINATE REQUIREMENTS WITH OTHER TRADES.
14. INSTALL CONDUIT PATHWAYS PER TIA/EIA-568-B AND BICSI TDMM.
15. ROUTE CONDUIT, CABLE TRAYS, AND OTHER PATHWAYS PERPENDICULAR OR PARALLEL TO BUILDING LINES, IN GENERAL.
16. CONDUITS WITH LESS THEN 2" INSIDE DIAMETER WILL HAVE A BEND RADIUS OF NO LESS THAN 6 TIMES THE INSIDE DIAMETER. CONDUITS WITH A 2" OR GREATER INSIDE DIAMETER WILL HAVE A BEND RADIUS OF NO LESS THAN 10 TIMES THE INSIDE DIAMETER.
17. CONDUIT RUNS SHALL NOT EXCEED 180 DEGREES OR TWO 90-DEGREE BENDS WITHOUT AN APPROPRIATE NEMA RATED PULL BOX OR/AND INCREASE CONDUIT BY ONE TRADE SIZE FOR EACH ADDITIONAL BEND OF UP TO 90 DEGREES, UNLESS LAST BEND IS WITHIN 12 INCHES OF THE CONDUIT END.
18. WHEN ROUTING CONDUIT IN CONCRETE, MAINTAIN A GRADUATED BEND RADIUS TO MAINTAIN CONDUIT CAPACITY. THE USE OF 90-DEGREE 'ELBOW' FITTINGS IS EXPRESSLY PROHIBITED UNLESS PRIOR AUTHORIZATION IS RECEIVED FROM VA RESIDENT ENGINEER, IN WRITING.
19. PROPERLY FIRE SEAL CONDUIT AND RACEWAY PENETRATIONS THROUGH FIRE RATED WALLS AND FLOORS TO MAINTAIN THE FIRE SEPARATION RATING. PROVIDE FIRE SEALING ASSEMBLIES THAT ARE UL LISTED FOR THE APPLICATION. COORDINATE REQUIREMENTS WITH LOCAL FIRE MARSHALL PRIOR TO INSTALLATION. DO NOT MIX PRODUCTS BETWEEN MANUFACTURED ASSEMBLIES.
20. PROVIDE EXPANSION/DEFLECTION FITTINGS FOR CONDUITS AT STRUCTURAL EXPANSION JOINT CROSSINGS.
21. PROVIDE PLASTIC BUSHINGS ON EXPOSED ENDS OF CONDUIT AND SLEEVES, WHETHER VISIBLE OR NOT.
22. PROVIDE EMT 4" TRADE SIZE CONDUITS FOR BACKBONE PATHWAYS WITH 40" MINIMUM BEND RADIUS FITTINGS, UON.
23. CONDULET ("LB", ETC.) FITTINGS ARE EXPRESSLY PROHIBITED FOR TELECOMMUNICATIONS SYSTEM PATHWAYS.
24. PROVIDE A PULL STRING IN EMPTY/UNUSED DISTRIBUTION CONDUITS AND CONDUITS SERVING TELECOMMUNICATIONS DEVICES SUITABLE FOR A 200 LB PULL TENSION MINIMUM.
25. PROVIDE DEDICATED SUPPORTS (e.g., CLIPS & WIRES) FOR CABLE SUPPORT HANGERS (OR SIMILAR PATHWAY COMPONENTS) INTENDED FOR TELECOMMUNICATIONS CABLES.
26. DO NOT SHARE SUPPORTS WITH OTHER TRADES/SYSTEMS, OTHER THAN SECURITY AND/OR AUDIOVISUAL.

TELECOMMUNICATIONS CABLING & DEVICES:

27. DO NOT TIE CABLES TO OTHER STRUCTURES NOT INTENDED FOR THIS SPECIFIC USE. DO NOT TIE CABLES TO CABLE TRAY.
28. ROUTE TELECOMMUNICATIONS CABLES PERPENDICULAR OR PARALLEL TO BUILDING LINES, IN GENERAL. ROUTE TELECOMMUNICATIONS CABLES NO LESS THAN 6 INCHES FROM ANY POWER SOURCE OR FLORESCENT LIGHTING FIXTURE, AND NO LESS THAN 4 FEET FROM ANY TRANSFORMER OR MOTOR.
29. GROUP AND DRESS EXPOSED TELECOMMUNICATIONS CABLE GROUPS USING VELCRO TIES, UON.
30. LABEL TELECOMMUNICATIONS CABLES ACCORDING TO SPECIFICATIONS. PROVIDE LABELS AT BOTH ENDS. PROVIDE SAMPLE LABELS TO THE VA RESIDENT ENGINEER AND OBTAIN WRITTEN APPROVAL PRIOR TO LABELING (VERIFY FORMAT AND REQUIRED FIELDS OF INFORMATION).

TELECOMMUNICATIONS ROOMS:

31. COMPONENTS NOT RELATED TO THE SUPPORT OF THE TELECOMMUNICATIONS ROOM(S) FUNCTION (E.G.,PIPING, DUCTWORK, PNEUMATIC TUBING, ETC.) SHALL NOT BE INSTALLED IN, PASS THROUGH, OR ENTER THE TELECOMMUNICATIONS ROOM.
32. VALVE OR RUBBER TUBING COMPONENTS CONTAINING LIQUID MUST BE LOCATED OUTSIDE THE TELECOMMUNICATION ROOM(S) WHEN POSSIBLE. WHEN NOT POSSIBLE, TUBING CONTAINING LIQUIDS MUST BE ENCLOSED WITH A SPLASH GUARD AND MUST HAVE DRAINAGE THAT PREVENTS THE BUILDUP OF LIQUID WITHIN THE TELECOMMUNICATION ROOMS.

## ABBREVIATIONS

NOT ALL ABBREV. MAY BE USED

| | | | |
|---|---|---|---|
| A | AMPERES | UPS | UNINTERRUPTIBLE POWER SUPPLY |
| AFF | ABOVE FINISHED FLOOR | UTP | UNSHIELDED TWISTED PAIR |
| ARF | ABOVE RAISED FLOOR | V | VOLTS |
| AWG | AMERICAN WIRE GAUGE | WAP | WIRELESS ACCESS POINT |
| BAS | BUILDING AUTOMATION SYSTEM | W | WIDE |
| BCT | BONDING CONDUCTOR–TELECOM | WP | WEATHERPROOF |
| BDF | BUILDING DISTRIBUTION FACILITY | | |
| C | CONDUIT | | |
| CAT3 | CATEGORY 3 (UTP CABLE) | | |
| CAT5E | CATEGORY 5E (UTP CABLE) | | |
| CAT6 | CATEGORY 6 (UTP CABLE) | | |
| CAT6A | AUGMENTED CATEGORY 6 (UTP CABLE) | | |
| CATV | COMMUNITY ANTENNA TELEVISION | | |
| CATVP | COMM. ANTENNA TELEVISION PLENUM | | |
| CEC | CCTV EQUIPMENT CABINET | | |
| CMP | COMMUNICATIONS MEDIA PLENUM | | |
| CMR | COMMUNICATIONS MEDIA RISER | | |
| D | DEEP | | |
| DAS | DISTRIBUTED ANTENNA SYSTEM | | |
| DIV | DIVISION | | |
| (E) | EXISTING | | |
| EC | ELECTRICAL CONTRACTOR | | |
| EMS | ELECTRICAL MANAGEMENT SYSTEM | | |
| EMT | ELECTRIC METALLIC TUBING | | |
| EQUIP | EQUIPMENT | | |
| (F) | FUTURE | | |
| FACP | FIRE ALARM CONTROL PANEL | | |
| FATC | FIRE ALARM TERMINAL CABINET | | |
| FO | FIBER OPTIC | | |
| GC | GENERAL CONTRACTOR | | |
| GRS | GALVANIZED RIGID STEEL | | |
| H | HIGH | | |
| IDF | INTERMEDIATE DISTRIBUTION FACILITY | | |
| ISP | INSIDE PLANT | | |
| JB | JUNCTION BOX | | |
| LCP | LIGHTING CONTROL PANEL | | |
| MBGRB | MAIN BUILDING GROUNDING REFERENCE BUS | | |
| MDF | MAIN DISTRIBUTION FACILITY | | |
| MH | MAINTENANCE HOLE | | |
| MM | MULTIMODE | | |
| MPOE | MINIMUM POINT OF ENTRY | | |
| (N) | NEW | | |
| NC | NORMALLY CLOSED | | |
| NIC | NOT IN CONTRACT | | |
| NPF | NETWORK PATCHING FACILITY | | |
| NO | NORMALLY OPEN | | |
| NTS | NOT TO SCALE | | |
| OC | ON CENTER | | |
| OFCP | OPTICAL FIBER CONDUCTIVE PLENUM | | |
| OFCR | OPTICAL FIBER CONDUCTIVE RISER | | |
| OFNP | OPTICAL FIBER NON-CONDUCTING PLENUM | | |
| OFNR | OPTICAL FIBER NON-CONDUCTING RISER | | |
| OSP | OUTSIDE PLANT | | |
| PB | PULLBOX | | |
| PNL | PANEL | | |
| PR | PAIR (OF COPPER CONDUCTORS) | | |
| PVC | POLYVINYL CHLORIDE | | |
| SAD | SEE ARCHITECTURAL DRAWINGS | | |
| SEC | SECURITY EQUIPMENT CABINET | | |
| SED | SEE ELECTRICAL DRAWINGS | | |
| SM | SINGLEMODE | | |
| ScTP | SCREENED TWISTED PAIR | | |
| STR | STRANDS (OF FIBER OPTIC CABLE) | | |
| STP | SHIELDED TWISTED PAIR | | |
| TBB | TELECOM BONDING BACKBONE | | |
| TBC | TELECOM BONDING CONDUCTOR | | |
| TGB | TELECOM GROUNDING BUSBAR | | |
| TMGB | TELECOM MAIN GROUNDING BUSBAR | | |
| TYP | TYPICAL | | |
| UON | UNLESS OTHERWISE NOTED | | |

Issues & Revisions: | Date

**CONSULTANTS:**

REGISTERED PROFESSIONAL ENGINEER LARRY A. ANDERSON No. 17587 ELECTRICAL STATE OF CALIFORNIA

TEECOM
1333 Broadway
Suite 601
Oakland, CA 94612
510 337 2800
www.teecom.com

TEECOM has undertaken considerable measures to protect the confidentiality of its proprietary information. This document contains information that is the confidential and proprietary property of TEECOM and may not be copied, published, or disclosed to others, or used for any other purpose than review by consent, without the express written consent of an authorized officer of TEECOM. This document must be kept in a file designated as "TEECOM" and kept confidential when not being reviewed as result of consent.

COPYRIGHT 1997–2013 TEECOM, ALL RIGHTS RESERVED.

**KEY PLAN**

**ARCHITECT/ENGINEERS:**

MEI architecture + interiors
239 9TH STREET, SUITE 201
SAN FRANCISCO, CA 94103
T (415) 682-7376 F (415) 682-7339
www.meiarchitects.com

Drawing Title: **SYMBOLS LIST AND GENERAL NOTES**

Approved: Project Director

Project Title: **CONSOLIDATE / EXPAND MEDICAL PROCEDURES MINOR (CEMP)**

Location: **VANCHCS - MATHER, CA**

Date: **APRIL 22, 2014** | Checked: **JS** | Drawn: **SA**

Project Number: **612-111**

Building Number:

Drawing Number: **TN0-1** Dwg. of

**Office of Facilities Management**

Department of Veterans Affairs

VA FORM 08-6231, OCT 1978

**FULLY SPRINKLERED** **100% CONSTRUCTION DOCUMENTS**

# TELECOMMUNICATIONS OUTLET SCHEDULE

| OUTLET TYPE DESCRIPTION | SYMBOL | PORT NUMBER – CABLE ASSIGNMENTS (REFER TO "CABLE SERVICE TYPES" FOR DEFINITIONS; B = BLANK) | | | | | | | WORKSTATION OUTLETS (PATHWAY SERVICE, CONFIGURATIONS, MOUNTING, AND TERMINATIONS) | | | | | | | | | | PATCHING AND CROSSCONNECTING REQUIREMENTS | | | |
|---|---|---|---|---|---|---|---|---|---|---|---|---|---|---|---|---|---|---|---|---|---|---|
| | | #1 | #2 | #3 | #4 | #5 | #6 | COMMENTS | PATHWAY FEED | COMMENTS | DEVICE BOX | COMMENTS | RING | COMMENTS | MOUNTING | COMMENTS | FACEPLATE/OUTLET | | WORKSTATION | COMMENTS | IDF | COMMENTS |
| STANDARD WALL | V | "V" | "V" | B | B | "D" | "D" | – | 1–1/4" CONDUIT | 1 | 5" x 5" x 2.875" | – | SINGLE–GANG | 2 | WALL, FLUSH, +18" AFF (UON) | 5 | 6–PORTS | – | SUPPLY ONE 10" CATEGORY 6 PATCH CORD FOR EACH STATION | 6 | SUPPLY ONE 7" CATEGORY 6 PATCH CORD FOR EACH STATION | COMMENTS |
| WALL PHONE | V W | "V" | – | – | – | – | – | – | 1" CONDUIT | 1 | 4–11/16" x 4–11/16" x 2–1/4" | – | SINGLE–GANG | 2 | WALL, FLUSH, +48" AFF (UON) | 5 | FACEPLATE, "WALL PHONE" TYPE | – | – | – | – | 6 |
| ELEVATOR | V E | "V" | "V" | – | – | – | – | 4 | 1" CONDUIT | 1 | 4–11/16" x 4–11/16" x 2–1/4" | – | SINGLE–GANG | 2 | – | 4 | | 4 | – | – | – | – |
| FIRE ALARM | V FA | "V" | "V" | "D" | B | – | – | 4 | 1–1/4" CONDUIT | 1 | 5" x 5" x 2.875" | – | SINGLE–GANG | 2 | – | 4 | 6–PORTS | 4 | – | – | – | – |
| BMS | V BMS | "D" | – | – | – | – | – | 4 | 1" CONDUIT | 1 | 4–11/16" x 4–11/16" x 2–1/4" | – | SINGLE–GANG | 2 | WALL, FLUSH, +48" AFF (UON) | 4 | 1–PORT | 4 | – | – | – | – |
| LCD/TV – WALL | V TV | "TV" | "D" | "D" | – | – | – | 5 | 1–1/4" CONDUIT | 1 | 5" x 5" x 2.875" | – | SINGLE–GANG | 2 | WALL, FLUSH, +84" AFF (UON) | 5 | 2–PORT | – | SUPPLY ONE 10" CATEGORY 6 PATCH CORD FOR EACH STATION | 6 | SUPPLY ONE 7" CATEGORY 6 PATCH CORD FOR EACH STATION | 6 |
| WIRELESS ACCESS POINT | V WAP | "D" | "D" | – | – | – | – | – | BASKET TRAY | – | 4–PORT SURFACE MOUNT BOX | 7 | – | – | ABOVE CEILING GRID | – | – | – | SUPPLY ONE 10" CATEGORY 6 PATCH CORD FOR EACH STATION | 6 | SUPPLY ONE 7" CATEGORY 6 PATCH CORD FOR EACH STATION | – |
| BOOM | V B | "D" | "D" | "D" | "D" | – | – | – | BASKET TRAY | – | 2–PORT SURFACE MOUNT BOX | – | – | – | ABOVE CEILING GRID | – | – | – | SUPPLY ONE 10" CATEGORY 6 PATCH CORD FOR EACH STATION | 6 | SUPPLY ONE 7" CATEGORY 6 PATCH CORD FOR EACH STATION | – |
| PROJECTOR | V P | "D" | "D" | – | – | – | – | – | 1–1/4" CONDUIT | – | 5" x 5" x 2.875" | – | SINGLE–GANG | 2 | – | 4 | 6–PORTS | – | SUPPLY ONE 10" CATEGORY 6 PATCH CORD FOR EACH STATION | 6 | SUPPLY ONE 7" CATEGORY 6 PATCH CORD FOR EACH STATION | 6 |
| IP CAMERA | V SEC | "D" | – | – | – | – | – | – | REFER TO SECURITY DETAIL | – | 2–PORT SURFACE MOUNT BOX | – | – | – | ABOVE CEILING GRID | – | – | – | SUPPLY ONE 10" CATEGORY 6 PATCH CORD FOR EACH STATION | 6 | SUPPLY ONE 7" CATEGORY 6 PATCH CORD FOR EACH STATION | 6 |
| FLOOR BOX | V | "V" | "V" | B | B | "D" | "D" | 3 | (2) 1–1/4" CONDUIT | 1 | FLOORBOX | – | – | – | IN FLOOR | – | 6–PORT | – | SUPPLY ONE 10" CATEGORY 6 PATCH CORD FOR EACH STATION | 6 | SUPPLY ONE 7" CATEGORY 6 PATCH CORD FOR EACH STATION | 6 |

CABLE SERVICE TYPES, AND TERMINATIONS:

| DESCRIPTOR | CABLE TYPE | CONDUCTORS | NEC | TERMINATION TYPE AT EQUIPMENT ROOM. | COMMENTS |
|---|---|---|---|---|---|
| "V" | UTP CAT6 | 4 TWISTED PAIRS (23 AWG) | CMP | HORIZONTAL VOICE FIELD – ONTO RACK MOUNTED MODULAR PATCH PANELS | |
| "D" | UTP CAT6 | 4 TWISTED PAIRS (23 AWG) | CMP | HORIZONTAL DATA FIELD – ONTO RACK MOUNTED MODULAR PATCH PANELS | |
| B | NONE | NONE | – | BLANK INSERT IN UNUSED PORT | |
| "TV" | COAXIAL | 75 OHM COAX | CATVP | CATV DISTRIBUTION FIELD – VIA WALL MOUNTED F CONNECTORS | |

KEYED COMMENTS:

1. PROVIDE CONDUIT STUB FROM ACCESSIBLE CEILING SPACE TO DEVICE BOX, WITH PULL STRING.
2. PROVIDE DEVICE BOX AND RING.
3. DEVICE SHARED WITH ELECTRICAL. COORDINATE INSTALLATION WITH ELECTRICAL CONTRACTOR.
4. COORDINATE THE INSTALLATION WITH SPECIALTY EQUIPMENT CONTRACTOR (i.e. ELEVATOR, SECURITY, FIRE ALARM), INCLUDING DEVICE TYPE, LOCATION, & INSTALLATION HEIGHT, AND CONNECTION TO EQUIPMENT'S CONTROL PANEL.
5. REFER TO ARCHITECTURAL ELEVATIONS FOR MOUNTING HEIGHTS.
6. PATCH CORD INSTALLATION BY OWNER.
7. COORDINATE ROUTING AND TERMINATION OF CABLING WITH BOOM MANUFACTURE.

GENERAL NOTES:

A. REFER TO FLOOR PLANS FOR DIAGRAMMATIC LAYOUT OF TELECOM DEVICES. REFER TO ARCHITECTURAL PLANS AND ELEVATIONS FOR EXACT PLACEMENT OF TELECOM DEVICES.

B. CONTRACTOR IS REQUIRED TO FOLLOW THE VA CAMPUS' CABLE LABELING STANDARDS. PRIOR TO LABELING ANY CABLE OR OUTLETS THE CONTRACTOR IS REQUIRED TO PROVIDE A SUBMITTAL OF ALL LABELING INFORMATION FOR APPROVAL.

1 TELECOMMUNICATIONS OUTLET DEVICE SCHEDULE
SCALE: NONE

# NURSE CALL DEVICE SCHEDULE

| SYMBOL | DESCRIPTION | DEVICES (PATHWAY SERVICE, CONFIGURATIONS, MOUNTING, AND TERMINATIONS) | | | | | | | |
|---|---|---|---|---|---|---|---|---|---|
| | | PATHWAY FEED | COMMENTS | DEVICE BOX | COMMENTS | RING | COMMENTS | MOUNTING | COMMENTS |
| MS | MASTER CONSOLE | 1" CONDUIT TO ACCESSIBLE CEILING | 1 | 4–11/16" x 4–11/16" x 2–1/4" | – | SINGLE–GANG | 2, 3 | WALL, FLUSH, +18" AFF (UON) | 5 |
| NC | STAFF ASSIST | 1" CONDUIT TO ACCESSIBLE CEILING | 1 | 4–11/16" x 4–11/16" x 2–1/4" | – | SINGLE–GANG | 2, 3 | WALL, FLUSH, +54" AFF (UON) | 5 |
| D | DOME LIGHT (WALL) | 1" CONDUIT TO ACCESSIBLE CEILING | 9 | 4–11/16" x 4–11/16" x 2–1/4" | – | DOUBLE–GANG | 2, 3 | WALL, FLUSH, ABOVE DOOR HEADER | 5 |
| D | DOME LIGHT (CEILING) | 1" CONDUIT TO ACCESSIBLE CEILING | 9 | 4–11/16" x 4–11/16" x 2–1/4" | – | DOUBLE–GANG | 2, 3 | CEILING W/BRACKET & SUPPORT WIRE | 4, 8 |
| PC | PULL CORD | 1" CONDUIT TO ACCESSIBLE CEILING | 1 | 4–11/16" x 4–11/16" x 2–1/4" | – | SINGLE–GANG | 2, 3 | WALL, FLUSH, +54" AFF (UON) | 5 |
| DS | DUTY STATION | 1" CONDUIT TO ACCESSIBLE CEILING | 1 | 4–11/16" x 4–11/16" x 2–1/4" | – | SINGLE–GANG | 2, 3 | WALL, FLUSH, +54" AFF (UON) | 5 |
| SS | STAFF STATION | 1" CONDUIT TO ACCESSIBLE CEILING | 1 | 4–11/16" x 4–11/16" x 2–1/4" | – | SINGLE–GANG | 2, 3 | WALL, FLUSH, +54" AFF (UON) | 5 |

KEYED COMMENTS:

1. PROVIDE CONDUIT STUB FROM CEILING SPACE DOWN WALL TO DEVICE BOX, WITH PULL STRING.
2. PROVIDE DEVICE BOX AND RING.
3. VERIFY DEVICE BOX AND RING TYPE WITH SYSTEM VENDOR PRIOR TO ROUGH–IN.
4. COORDINATE CEILING MOUNTED DEVICE PLACEMENT WITH ALL TRADES AND SUBCONTRACTORS.
5. VERIFY MOUNTING HEIGHTS/LOCATIONS WITH ARCHITECTURAL DRAWINGS/ELEVATIONS.
6. α
7. PROVIDE CONDUIT STUB FROM CEILING DEVICE BOX TO ACCESSIBLE CEILING SPACE, WITH PULL STRING (AS REQUIRED).
8. PROVIDE DEVICE BOX AND RING, WITH CEILING MOUNTED SUPPORT BRACKET.
9. PROVIDE CONDUIT TO STAND ALONE CONTROL BOX LOCATED ABOVE CEILING

GENERAL NOTES:

A. REFER TO FLOOR PLANS FOR DIAGRAMMATIC LAYOUT OF NURSE CALL DEVICES. REFER TO ARCHITECTURAL PLANS AND ELEVATIONS FOR EXACT PLACEMENT OF NURSE CALL DEVICES.

2 NURSE CALL DEVICE SCHEDULE
SCALE: NONE

Issues & Revisions: | Date

CONSULTANTS:

REGISTERED PROFESSIONAL ENGINEER LARRY A. ANDERSON No. 17587 ELECTRICAL STATE OF CALIFORNIA

TEECOM
1333 Broadway
Suite 401
Oakland, CA 94612
510 337 2800
www.teecom.com

TEECOM has undertaken considerable measures to protect the confidentiality of its proprietary information. This document contains information that is the confidential and proprietary property of TEECOM and may not be copied, published, or disclosed to others, or used for any other purpose than review by consent, without the express written consent of an authorized officer of TEECOM. This document must be kept in a file designated as "TEECOM" and kept confidential when not being reviewed as result of consent.

COPYRIGHT 1997–2013 TEECOM, ALL RIGHTS RESERVED.

KEY PLAN

ARCHITECT/ENGINEERS:

IMEI architecture + interiors
239 9TH STREET, SUITE 201
SAN FRANCISCO, CA 94103
T (415) 682-7376 F (415) 682-7339
www.imeiarchitects.com

Drawing Title: TELECOM & NURSE CALL SCHEDULES

Approved: Project Director

Project Title: CONSOLIDATE / EXPAND MEDICAL PROCEDURES MINOR (CEMP)

Location: VANCHCS - MATHER, CA

Date: APRIL 22, 2014 | Checked: JS | Drawn: SA

Project Number: 612-111

Building Number:

Drawing Number: TN0-2

Dwg. of

Office of Facilities Management

Department of Veterans Affairs

VA FORM 08–6231, OCT 1978

FULLY SPRINKLERED

100% CONSTRUCTION DOCUMENTS

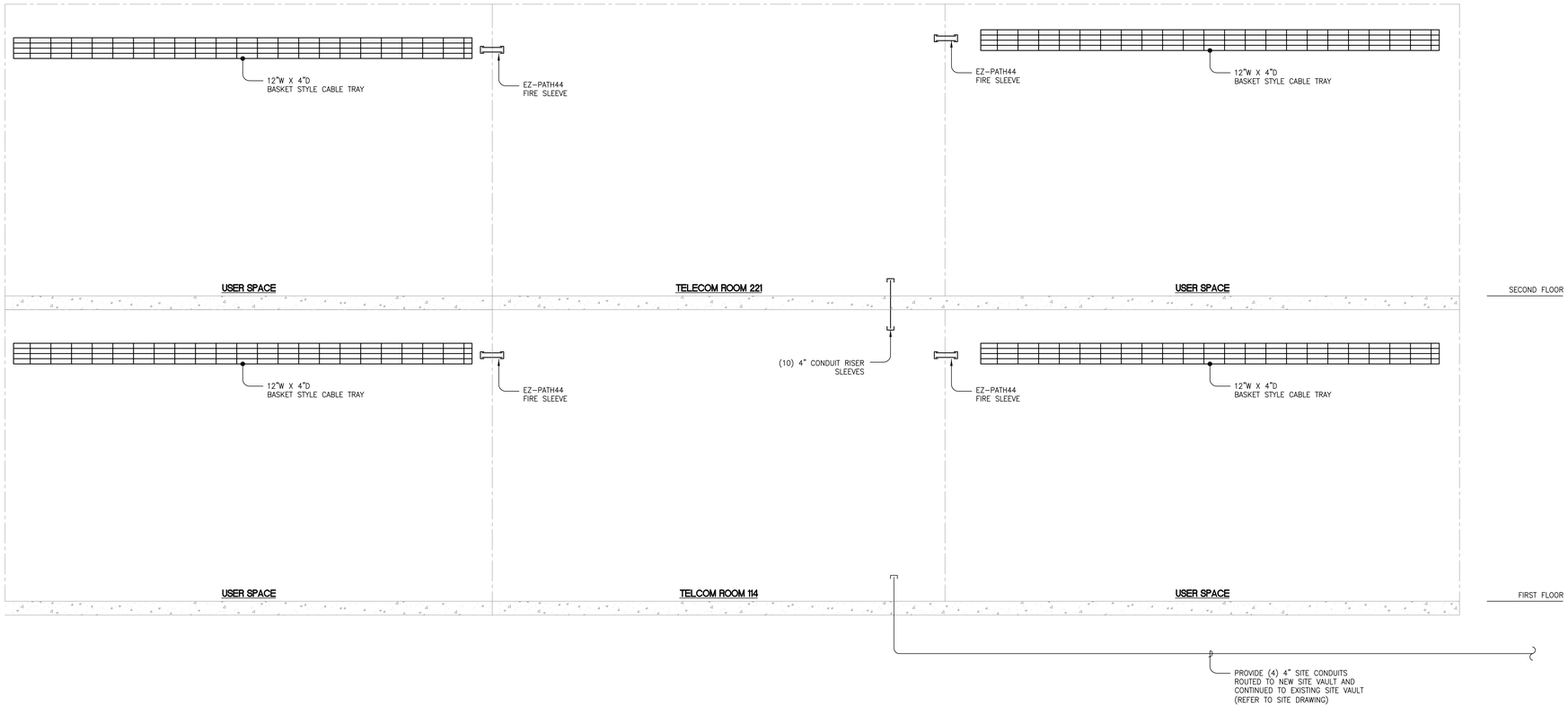


# GENERAL NOTES

1. THIS DRAWING REPRESENTS A DIAGRAMMATIC OVERVIEW OF THE TELECOMMUNICATION PATHWAY INFRASTRUCTURE. REFER TO FLOOR PLANS AND ROOM DETAILS FOR ESTIMATING PATHWAY LENGTHS AND PLACEMENT.
2. PATHWAYS SHOWN DEDICATED FOR TELECOMMUNICATIONS CABLING ONLY, UON.
3. PROVIDE FIRESTOP MATERIAL IN AND AROUND SLEEVES AND CONDUITS THAT PENETRATE FIRE RATED WALLS OR FLOORS.
4. PROVIDE PLASTIC BUSHINGS AT THE ENDS OF CONDUITS AND SLEEVES.
5. ROUTE TBB IN TELECOM PATHWAYS AS NOTED.

# KEYNOTES

| Issues & Revisions: | Date |
|---|---|
| | |

## CONSULTANTS:

REGISTERED PROFESSIONAL ENGINEER
LARRY A. ANDERSON
No. 17587
ELECTRICAL
STATE OF CALIFORNIA

TEECOM
1333 Broadway
Suite 601
Oakland, CA 94612
510.337.2800
www.teecom.com

TEECOM has undertaken considerable measures to protect the confidentiality of its proprietary information. This document contains information that is the confidential and proprietary property of TEECOM and may not be copied, published, or disclosed to others, or used for any other purpose than review by consent, without the express written consent of an authorized officer of TEECOM. This document must be kept in a file designated as "TEECOM" and kept confidential when not being reviewed as result of consent.

COPYRIGHT 1997-2013 TEECOM, ALL RIGHTS RESERVED.

## KEY PLAN

## ARCHITECT/ENGINEERS:

MEI architecture + interiors
239 9TH STREET, SUITE 201
SAN FRANCISCO, CA 94103
T (415) 682-7376 F (415) 682-7339
www.meiarchitects.com

Drawing Title
**PATHWAY RISER DIAGRAM**

Approved: Project Director

Project Title
**CONSOLIDATE / EXPAND MEDICAL PROCEDURES MINOR (CEMP)**

Location
**VANCHCS - MATHER, CA**

| Date | Checked | Drawn |
|---|---|---|
| APRIL 22, 2014 | JS | SA |

Project Number
612-111

Building Number

Drawing Number
**TN1-1**
Dwg. of

**Office of Facilities Management**
Department of Veterans Affairs

VA FORM 08-6231, OCT 1978

**FULLY SPRINKLERED** **100% CONSTRUCTION DOCUMENTS**

## TBC SIZING CHART

| CRITICAL APPLICATIONS "SERVER-ROOM" | | NON-CRITICAL APPLICATIONS "TEL ROOM" | |
|---|---|---|---|
| GAUGE | LENGTH (MAX.) | GAUGE | LENGTH (MAX.) |
| 6 AWG | 13 FT | 6 AWG | 25 FT |
| 4 AWG | 20 FT | 4 AWG | 41 FT |
| 3 AWG | 26 FT | 3 AWG | 52 FT |
| 2 AWG | 33 FT | 2 AWG | 66 FT |
| 1 AWG | 41 FT | 1 AWG | 83 FT |
| 1/0 AWG | 52 FT | 1/0 AWG | 105 FT |

## GROUNDING RISER SYMBOLS LIST

- BUSBAR CONNECTION
- CONDUIT
- TBB / TBC
- BUSBAR
- CONNECTION TO BUSBAR (GROUNDING LUG)
- CABLE TRAY – LADDER TYPE
- CABLE TRAY – 'WIRE BASKET' TYPE
- CABLE TRAY – RACE WAY
- CABLE RUNWAY ("LADDER RACK")
- CONDUIT/SLEEVE
- BUILDING STEEL
- ELECTRICAL PANEL BUS
- EQUIPMENT RACK
- EQUIPMENT/SERVER CABINET
- SPLICE ENCLOSURE
- ARMORED FIBER CABLE
- ARMORED COPPER CABLE
- BUILDING PROTECTION BLOCK

## GENERAL NOTES

1. THIS DRAWING REPRESENTS A DIAGRAMMATIC OVERVIEW OF THE TELECOMMUNICATION GROUNDING AND BONDING INFRASTRUCTURE. REFER TO FLOOR PLANS FOR ESTIMATING BACKBONE CONDUCTOR LENGTHS AND ROOM DETAILS FOR COMPONENT PLACEMENT.
2. PROVIDE FIRESTOP MATERIAL IN AND AROUND SLEEVES AND CONDUITS THAT PENETRATE FIRE RATED WALLS OR FLOORS.
3. REFER TO GROUNDING AND BONDING DETAILS ON SHEET TN9.X FOR INSTALLATION REQUIREMENTS.
4. LABEL BUSBARS AND GROUNDING CONDUCTORS. REFER TO SPECIFICATIONS SECTION 16706.
5. REFER TO PATHWAYS RISER DIAGRAM FOR TBB ROUTING REQUIREMENTS.

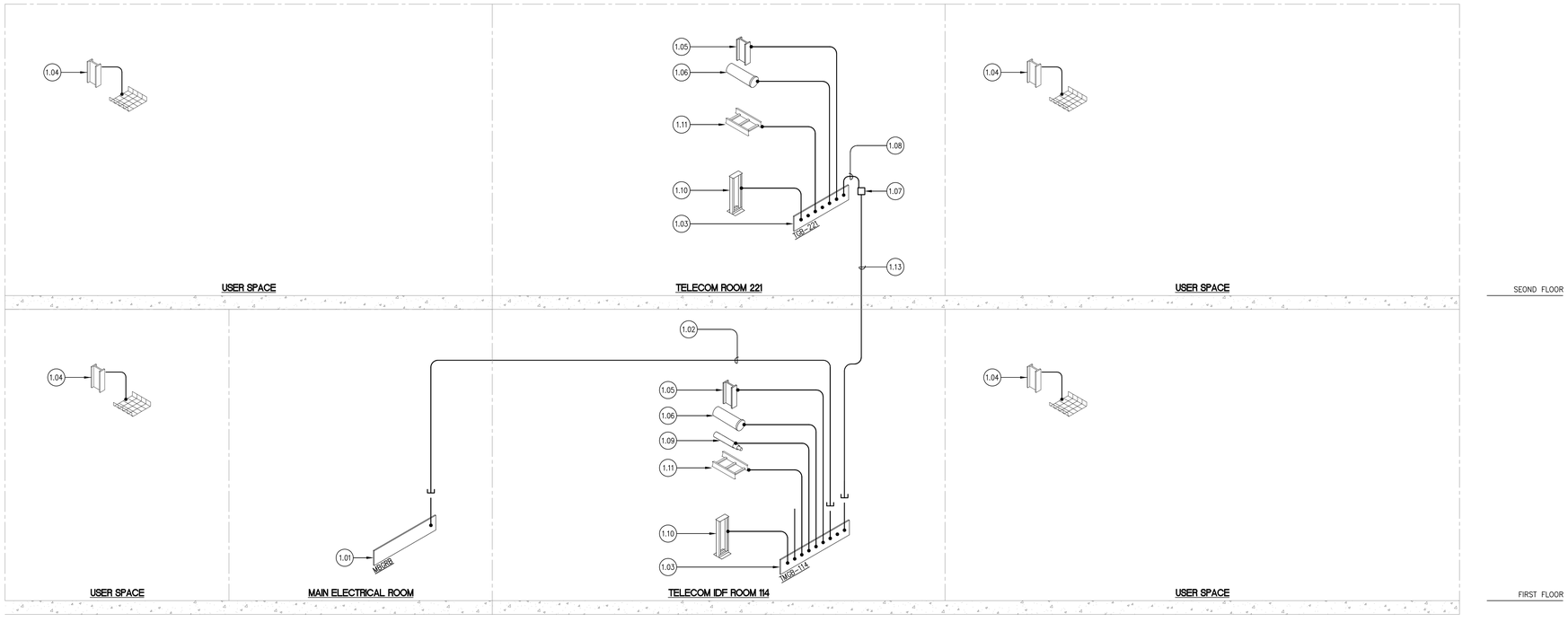


## KEYNOTES

1,01 ELECTRICAL MAIN BUILDING GROUND REFERENCE BUSBAR (MBGRB). REFER TO ELECTRICAL DRAWINGS FOR MBGRB LOCATION.

1.02 PROVIDE INSULATED GROUND CONDUCTOR AS BCT, IN 1-1/4" EMT CONDUIT FROM MBGRB TO TMGB-1.2.

1.03 PROVIDE "TMGB"-TYPE GROUNDING BUSBAR. REFER TO ROOM PLAN FOR INSTALLATION REQUIREMENTS.

1.04 PROVIDE BOND FROM BASKET TRAY IN USER SPACE TO BUILDING STEEL.

1.05 PROVIDE TBC FROM TMGB/TGB TO NEAREST BUILDING STEEL.

1.06 PROVIDE TBC FROM TMGB/TGB TO CONDUITS. CONDUITS MAY BE BONDED IN SERIES WITH "LAST" CONDUIT BONDED TO TMGB/TGB. USE ONLY ONE GROUNDING LUG PER CONDUIT.

1.07 PROVIDE EXOTHERMIC WELD CONNECTING THE TBC TO THE TBB.

1.08 PROVIDE TBC FROM THE TBB TO TGB.

1.09 PROVIDE TBC FROM TMGB/TGB TO ARMORED FIBER-OPTIC BACKBONE CABLE.

1.10 PROVIDE TBC FROM TMGB/TGB TO EQUIPMENT RACK BAYS. (RACKS MAY BE BONDED IN SERIES WITH "LAST" RACK BONDED TO TMGB/TGB.)

1.11 PROVIDE TBC FROM TMGB/TGB TO OVERHEAD CABLE TRAY.

| Issues & Revisions: | Date |
|---|---|
| | |

**CONSULTANTS:**

REGISTERED PROFESSIONAL ENGINEER LARRY A. ANDERSON No. 17587 ELECTRICAL STATE OF CALIFORNIA

TEECOM
1333 Broadway
Suite 601
Oakland, CA 94612
510 337 2800
www.teecom.com

TEECOM has undertaken considerable measures to protect the confidentiality of its proprietary information. This document contains information that is the confidential and proprietary property of TEECOM and may not be copied, published, or disclosed to others, or used for any other purpose than review by consent, without the express written consent of an authorized officer of TEECOM. This document must be kept in a file designated as "TEECOM" and kept confidential when not being reviewed as result of consent.

COPYRIGHT 1997-2013 TEECOM, ALL RIGHTS RESERVED.

**KEY PLAN**

**ARCHITECT/ENGINEERS:**

MEI architecture + interiors
239 9TH STREET, SUITE 201
SAN FRANCISCO, CA 94103
T (415) 682-7376 F (415) 682-7339
www.meiarchitects.com

Drawing Title: **RISER DIAGRAM**

Approved: Project Director

Project Title: **CONSOLIDATE / EXPAND MEDICAL PROCEDURES MINOR (CEMP)**

Location: **VANCHCS - MATHER, CA**

Date: **APRIL 22, 2014** | Checked: **JS** | Drawn: **SA**

Project Number: **612-111**

Building Number:

Drawing Number: **TN1-2**

Dwg. of

**Office of Facilities Management**

Department of Veterans Affairs

VA FORM 08-6231, OCT 1978

**FULLY SPRINKLERED** **100% CONSTRUCTION DOCUMENTS**

# TELECOM RISER SYMBOLS LIST

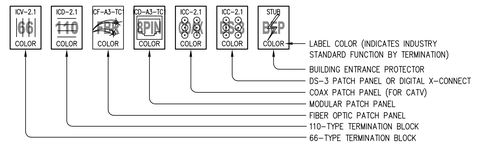


**LABEL COLOR LEGEND (PER TIA/EIA-606):**

| | | | |
|---|---|---|---|
| ORANGE | DEMARCATION POINT | GREY | 2ND LEVEL BACKBONE |
| GREEN | NETWORK CONNECTION | BLUE | STATION (HORIZONTAL) |
| PURPLE | EQUIPMENT (PBX, LAN) | BROWN | INTERBUILDING BACKBONE |
| WHITE | 1ST LEVEL BACKBONE | | |

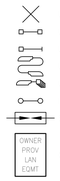


## GENERAL NOTES

1. THIS DRAWING REPRESENTS A DIAGRAMMATIC OVERVIEW OF THE TELECOMMUNICATION CABLING INFRASTRUCTURE. REFER TO FLOOR PLANS FOR ESTIMATING CABLE LENGTHS AND ROOM DETAILS FOR EQUIPMENT PLACEMENT.
2. REFER TO TELECOMMUNICATIONS DEVICE SCHEDULE FOR OUTLET CONFIGURATION REQUIREMENTS. REFER TO FLOOR PLANS FOR DEVICE PLACEMENT.

## KEYNOTES

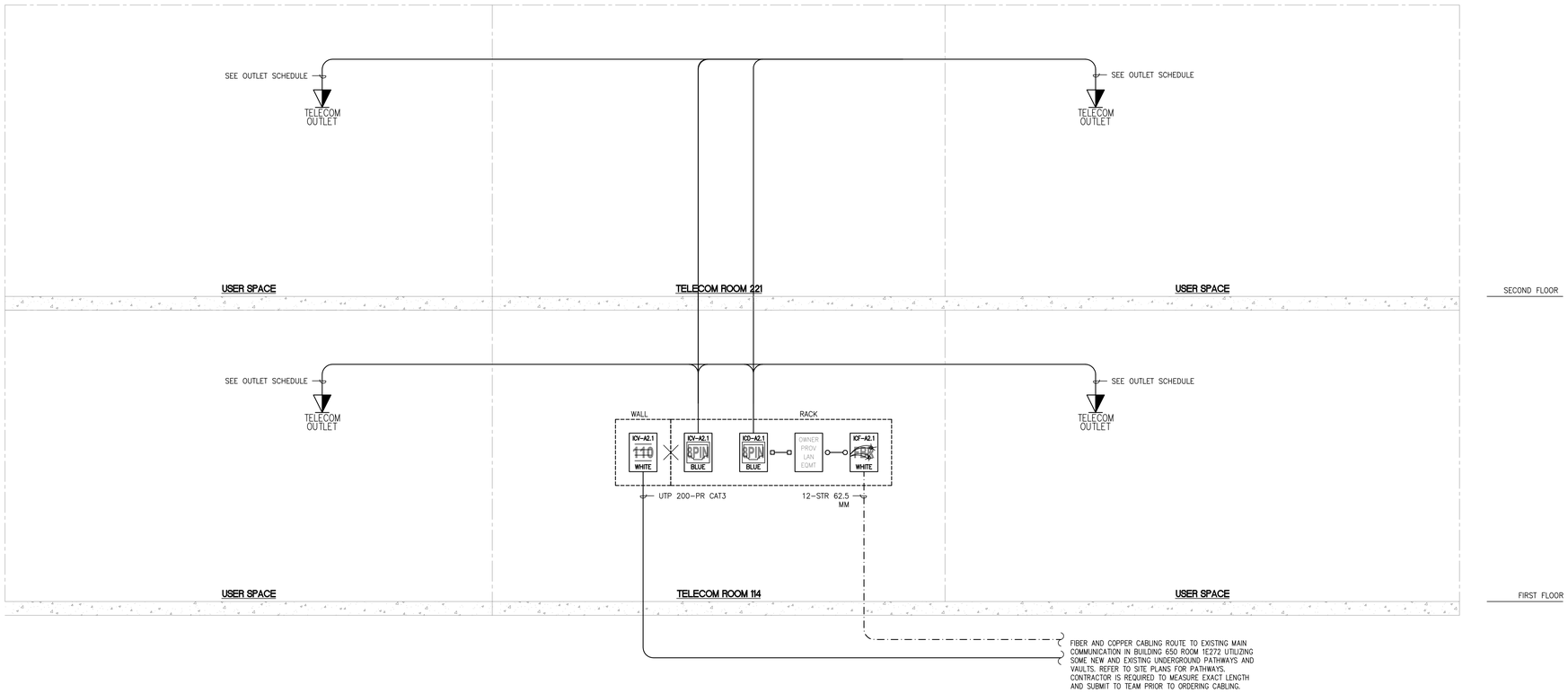


| Issues & Revisions: | Date |
|---|---|
| | |

**CONSULTANTS:**

REGISTERED PROFESSIONAL ENGINEER LARRY A. ANDERSON No. 17587 ELECTRICAL STATE OF CALIFORNIA

TEECOM
1333 Broadway
Suite 601
Oakland, CA 94612
510.337.2600
www.teecom.com

TEECOM has undertaken considerable measures to protect the confidentiality of its proprietary information. This document contains information that is the confidential and proprietary property of TEECOM and may not be copied, published, or disclosed to others, or used for any other purpose than review by consent, without the express written consent of an authorized officer of TEECOM. This document must be kept in a file designated as "TEECOM" and kept confidential when not being reviewed as result of consent.

COPYRIGHT 1997-2013 TEECOM, ALL RIGHTS RESERVED.

**KEY PLAN**

**ARCHITECT/ENGINEERS:**

MEI architecture + interiors
239 9TH STREET, SUITE 201
SAN FRANCISCO, CA 94103
T (415) 682-7376 F (415) 682-7339
www.meiarchitects.com

Drawing Title: **CABLE RISER DIAGRAM**

Approved: Project Director

Project Title: **CONSOLIDATE / EXPAND MEDICAL PROCEDURES MINOR (CEMP)**

Location: **VANCHCS - MATHER, CA**

Date: **APRIL 22, 2014** | Checked: **JS** | Drawn: **SA**

Project Number: **612-111**

Building Number:

Drawing Number: **TN1-3** Dwg. of

**Office of Facilities Management**

Department of Veterans Affairs

VA FORM 08-6231, OCT 1978

**FULLY SPRINKLERED**

**100% CONSTRUCTION DOCUMENTS**

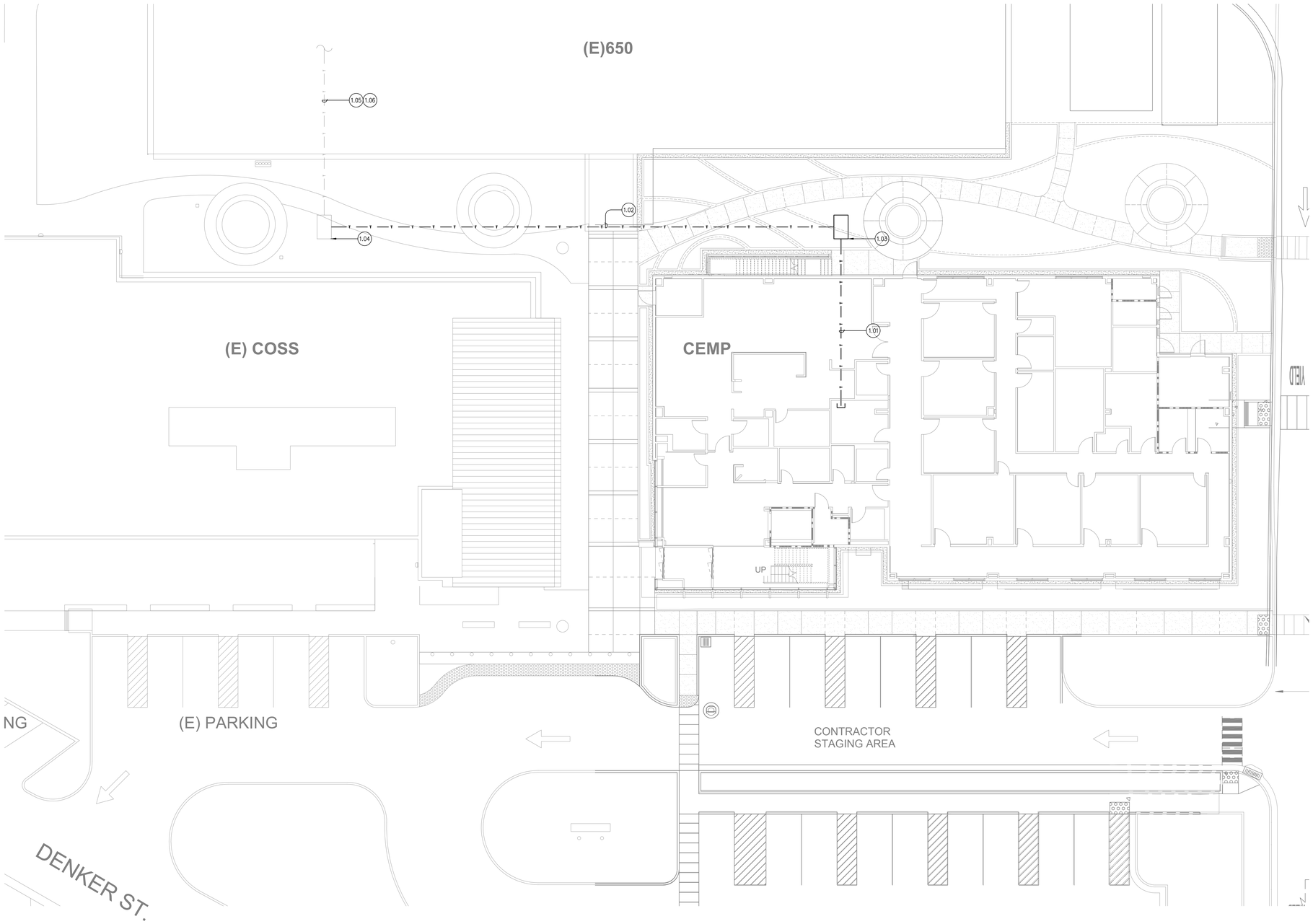


## GENERAL NOTES

1. THIS DRAWING REPRESENTS A DIAGRAMMATIC OVERVIEW OF THE TELECOMMUNICATION SITE PATHWAYS IN INFRASTRUCTURE. REFER TO CIVIL DRAWINGS FOR PLACEMENT AND INSTALLATION REQUIREMENTS.
2. PROVIDE A MINIMUM OF 12" SEPARATION BETWEEN TELECOM AND ELECTRICAL PARALLEL CONDUIT RUNS IN JOINT TRENCH. PROVIDE A MINIMUM OF 6" SEPARATION WHEN CROSSING ELECTRICAL CONDUITS.
3. DO NOT EXCEED TWO 90-DEGREE BENDS IN A CONTINUOUS CONDUIT RUN WITHOUT AN APPROPRIATE CABLE PULL-POINT.
4. PROVIDE 15' BEND RADIUS FOR 4" CONDUITS. ENCASE BEND IN A MINIMUM 3" OF CONCRETE TO PREVENT BURN-THROUGH WHEN PULLING CABLE(S). NO BEND RADIUS SHALL BE LESS THAN 60".
5. PROVIDE A MINIMUM OF 40" BEND RADIUS FOR BUILDING STUB-UPS. ENCASED STUB-UP BEND IN A MINIMUM 3-INCHES OF CONCRETE TO PREVENT BURN-THROUGH WHEN PULLING CABLE(S).
6. PROVIDE CONDUIT SEALING PLUGS IN OSP TELECOM CONDUITS. PROVIDE PLUG CONFORMING TO THE CABLE AND/OR INNERDUCT USED. PROVIDE BLANK PLUGS FOR UNUSED CONDUITS.
7. PROVIDE IDENTIFICATION TAGS FOR TELECOM CONDUITS. LOCATE AT EACH END OF THE CONDUIT IDENTIFYING THE DESTINATION AND USE AS "TELECOM".
8. PROVIDE A 3/8" POLYETHYLENE PULLING ROPE IN EMPTY/UNUSED BACKBONE CONDUITS AND INNERDUCTS. LEAVE 5' OF ROPE BEYOND CONDUIT ENDS AND SECURE ROPE. LABEL PULLING ROPE WITH ENDPOINTS.
9. CONDUIT SHOWN IS SCHEDULE 40 PVC.

## KEYNOTES

1.01 PROVIDE (4) 4" CONDUITS FROM BUILDING TO NEW SITE VAULT.

1.02 PROVIDE (4) 4" CONDUITS BETWEEN NEW SITE VAULT TO EXISTING SITE VAULT. CONTINUE CABLE ROUTING IN EXISTING PATHWAYS TO BUILDING 650 ROOM 1E272. EXACT LOCATION OF EXISTING VAULT TO BE COORDINATED WITH VA COR.

1.03 PROVIDE 24"X36"X18" SITE VAULT WITH TRAFFIC RATED LID. REFER TO CIVIL DRAWINGS FOR EXACT LOCATION AND REQUIRED DRAINAGE.

1.04 EXISTING SITE VAULT. COORDINATE NEW CONDUIT INSTALLATION TO EXISTING SITE VAULT WITH VA COR. PRIOR TO CONNECTING NEW PATHWAYS GET WRITTEN SIGN OFF FROM VA COR.

1.05 UTILIZE EXISTING SITE PATHWAYS. VERIFY SPARE CAPACITY AND WHICH CONDUITS TO USE WITH VA COR PRIOR TO INSTALLATION AN CABLING.

1.06 CONTRACTOR IS REQUIRE TO MEASURE THE EXACT LENGTH FROM EXISTING SITE VAULT IN EXISTING PATHWAYS TO TO BUILDING 650 ROOM 1E272 PRIOR TO ORDERING ANY BACKBONE COPPER OR FIBER.

Issues & Revisions: | Date

**CONSULTANTS:**

REGISTERED PROFESSIONAL ENGINEER — LARRY A. ANDERSON — No. 17587 — ELECTRICAL — STATE OF CALIFORNIA

TEECOM
1333 Broadway
Suite 601
Oakland, CA 94612
510 337 2600
www.teecom.com

TEECOM has undertaken considerable measures to protect the confidentiality of its proprietary information. This document contains information that is the confidential and proprietary property of TEECOM and may not be copied, published, or disclosed to others, or used for any other purpose than review by consent, without the express written consent of an authorized officer of TEECOM. This document must be kept in a file designated as "TEECOM" and kept confidential when not being reviewed as result of consent.

COPYRIGHT 1997-2013 TEECOM, ALL RIGHTS RESERVED.

**KEY PLAN**

N

**ARCHITECT/ENGINEERS:**

IMEI architecture + interiors
239 9TH STREET, SUITE 201
SAN FRANCISCO, CA 94103
T (415) 682-7376 F (415) 682-7339
www.meiarchitects.com

Drawing Title: **TELECOM SITE PLAN**

Approved: Project Director

Project Title: **CONSOLIDATE / EXPAND MEDICAL PROCEDURES MINOR (CEMP)**

Location: **VANCHCS - MATHER, CA**

Date: **APRIL 22, 2014** | Checked: **JS** | Drawn: **SA**

Project Number: **612-111**

Building Number:

Drawing Number: **TN2-1**
Dwg. of

**Office of Facilities Management**

Department of Veterans Affairs

VA FORM 08-6231, OCT 1978

**FULLY SPRINKLERED** **100% CONSTRUCTION DOCUMENTS**

# SHEET NOTES

1. SERVE TELECOMMUNICATIONS OUTLETS ON THIS SHEET FROM THE FIRST FLOOR TELECOM ROOM 114.
2. PATHWAYS SHOWN ARE DEDICATED FOR TELECOMMUNICATIONS CABLING ONLY, UON.
3. PATHWAYS ROUTES SHOWN ARE CONCEPTUAL. FIELD COORDINATE FINAL ROUTES.
4. CABLE TRAY DEPTH REFERS TO TRAY'S LOADING DEPTH.
5. FIRESTOP PENETRATIONS (SLEEVES AND CONDUITS) THROUGH RATED WALLS AND FLOORS TO MATCH WALL RATING.
6. REFER TO ARCHITECTURAL PLANS FOR EXACT LOCATION OF TELECOMMUNICATIONS OUTLETS.
7. LABEL CONDUITS AT BOTH ENDS. LABEL MUST INDICATE CONDUIT'S DEDICATED USE FOR TELECOMMUNICATIONS CABLING AND LOCATION OF THE CONDUIT'S FAR END.
8. PROVIDE KNOCK-ON BUSHINGS ON CONDUIT AND SLEEVE ENDS.
9. SEISMICALLY BRACE TELECOM PATHWAYS TO MEET LOCAL CODES.

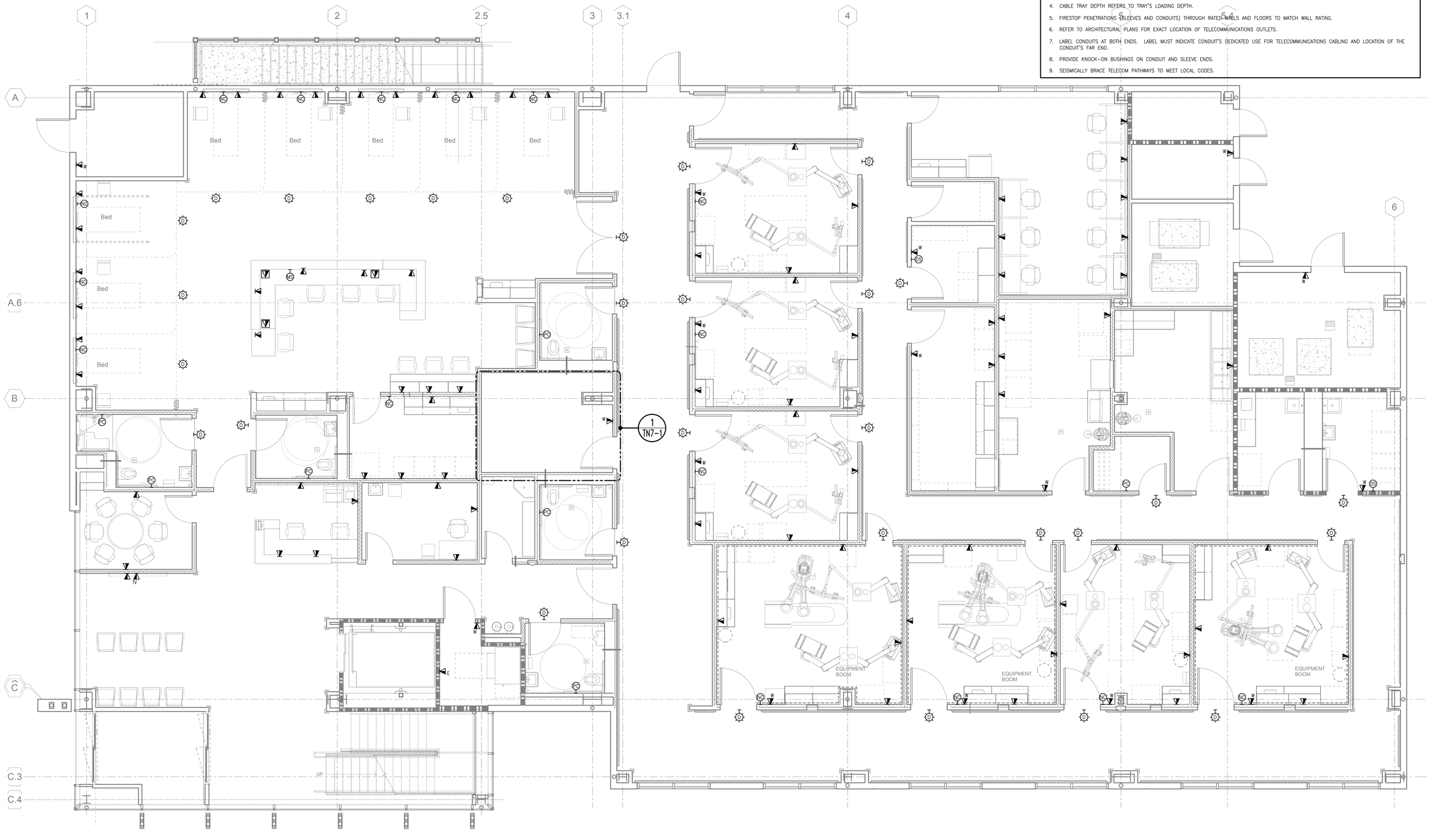


| Issues & Revisions: | Date |
|---|---|
| | |
| | |
| | |
| | |
| | |
| | |
| | |
| | |

## CONSULTANTS:

REGISTERED PROFESSIONAL ENGINEER
LARRY A. ANDERSON
No. 17587
ELECTRICAL
STATE OF CALIFORNIA

TEECOM

1333 Broadway
Suite 601
Oakland, CA 94612
510 337 2600
www.teecom.com

TEECOM has undertaken considerable measures to protect the confidentiality of its proprietary information. This document contains information that is the confidential and proprietary property of TEECOM and may not be copied, published, or disclosed to others, or used for any other purpose than review by consent, without the express written consent of an authorized officer of TEECOM. This document must be kept in a file designated as "TEECOM" and kept confidential when not being reviewed as result of consent.

COPYRIGHT 1997–2013 TEECOM, ALL RIGHTS RESERVED.

## KEY PLAN

## ARCHITECT/ENGINEERS:

MEI architecture + interiors

239 9TH STREET, SUITE 201
SAN FRANCISCO, CA 94103
T (415) 682-7376 F (415) 682-7339
www.meiarchitects.com

Drawing Title
**TELECOM FLOOR PLAN - LEVEL 1**

Approved: Project Director

Project Title
**CONSOLIDATE / EXPAND MEDICAL PROCEDURES MINOR (CEMP)**

Location
**VANCHCS - MATHER, CA**

| Date | Checked | Drawn |
|---|---|---|
| APRIL 22, 2014 | JS | SA |

Project Number
612-111

Building Number

Drawing Number
**TN4-1**
Dwg. of

**Office of Facilities Management**

Department of Veterans Affairs

VA FORM 08-6231, OCT 1978

**FULLY SPRINKLERED**

**100% CONSTRUCTION DOCUMENTS**

# SHEET NOTES

1. SERVE TELECOMMUNICATIONS OUTLETS ON THIS SHEET FROM THE FIRST FLOOR TELECOM ROOM 114.
2. PATHWAYS SHOWN ARE DEDICATED FOR TELECOMMUNICATIONS CABLING ONLY, UON.
3. PATHWAYS ROUTES SHOWN ARE CONCEPTUAL. FIELD COORDINATE FINAL ROUTES.
4. CABLE TRAY DEPTH REFERS TO TRAY'S LOADING DEPTH.
5. FIRESTOP PENETRATIONS (SLEEVES AND CONDUITS) THROUGH RATED WALLS AND FLOORS TO MATCH WALL RATING.
6. REFER TO ARCHITECTURAL PLANS FOR EXACT LOCATION OF TELECOMMUNICATIONS OUTLETS.
7. LABEL CONDUITS AT BOTH ENDS. LABEL MUST INDICATE CONDUIT'S DEDICATED USE FOR TELECOMMUNICATIONS CABLING AND LOCATION OF THE CONDUIT'S FAR END.
8. PROVIDE KNOCK-ON BUSHINGS ON CONDUIT AND SLEEVE ENDS.
9. SEISMICALLY BRACE TELECOM PATHWAYS TO MEET LOCAL CODES.

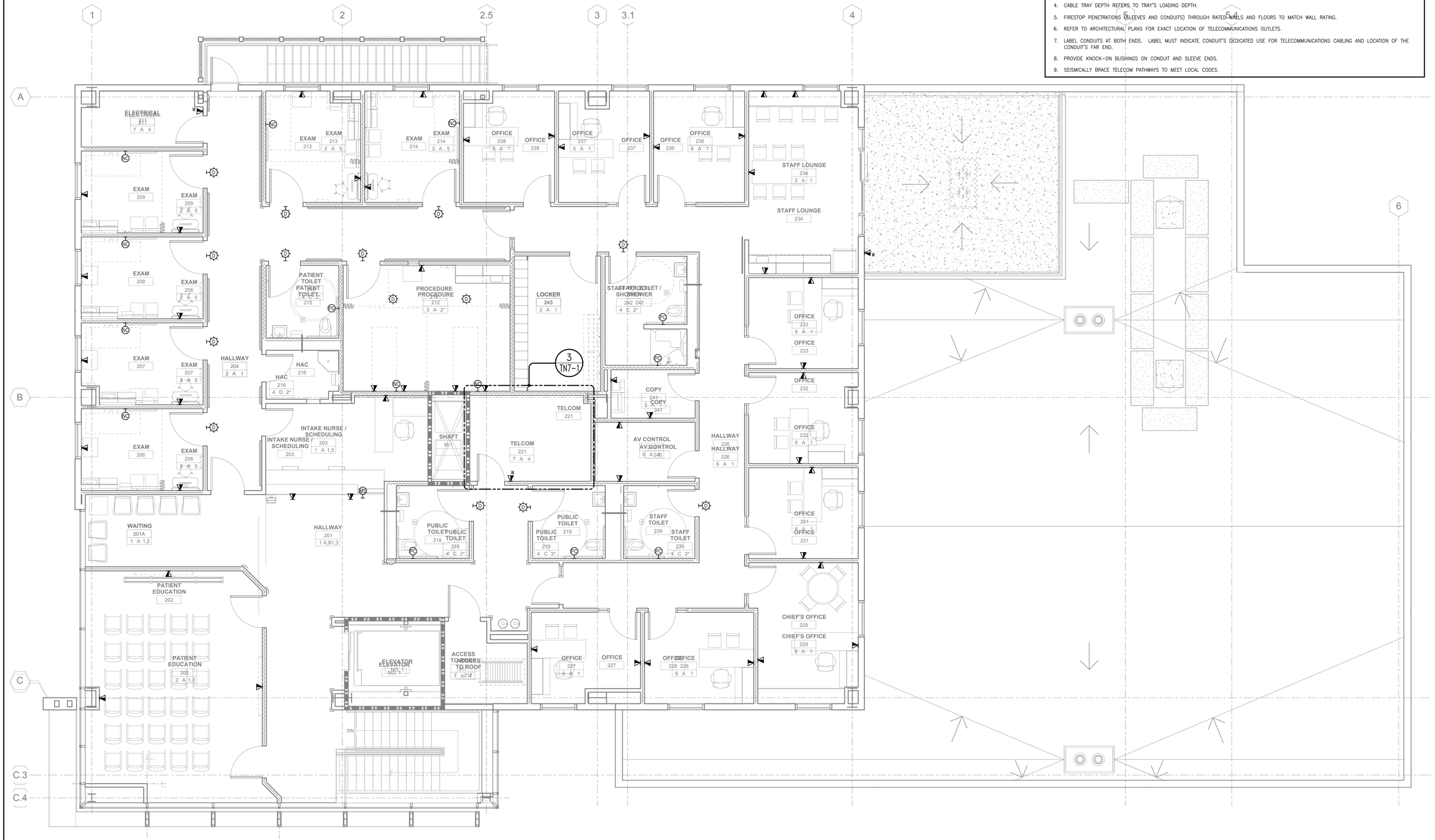


| Issues & Revisions: | Date |
|---|---|
| | |

## CONSULTANTS:

REGISTERED PROFESSIONAL ENGINEER LARRY A. ANDERSON No. 17587 ELECTRICAL STATE OF CALIFORNIA

TEECOM
1333 Broadway
Suite 601
Oakland, CA 94612
510 337 2800
www.teecom.com

TEECOM has undertaken considerable measures to protect the confidentiality of its proprietary information. This document contains information that is the confidential and proprietary property of TEECOM and may not be copied, published, or disclosed to others, or used for any other purpose than review by consent, without the express written consent of an authorized officer of TEECOM. This document must be kept in a file designated as "TEECOM" and kept confidential when not being reviewed as result of consent.

COPYRIGHT 1997-2013 TEECOM, ALL RIGHTS RESERVED.

## KEY PLAN

## ARCHITECT/ENGINEERS:

MEI architecture + interiors
239 9TH STREET, SUITE 201
SAN FRANCISCO, CA 94103
T (415) 682-7376 F (415) 682-7339
www.meiarchitects.com

Drawing Title: **TELECOM FLOOR PLAN - LEVEL 2**

Approved: Project Director

Project Title: **CONSOLIDATE / EXPAND MEDICAL PROCEDURES MINOR (CEMP)**

Location: **VANCHCS - MATHER, CA**

Date: **APRIL 22, 2014** | Checked: **JS** | Drawn: **SA**

Project Number: **612-111**

Building Number:

Drawing Number: **TN4-2** Dwg. of

**Office of Facilities Management**

Department of Veterans Affairs

VA FORM 08-6231, OCT 1978

**FULLY SPRINKLERED** **100% CONSTRUCTION DOCUMENTS**

## NUMBERED NOTES

1.01 12" X 4" CABLE TRAY

1.02 (4) 4" CONDUIT

1.03 PROVIDE DATA CABLE AND PATHWAY TO ROOF FOR SECURITY CAMERA

## SHEET NOTES

1. SERVE TELECOMMUNICATIONS DEVICES/OUTLETS ON THIS SHEET FROM FIRST FLOOR TELECOM ROOM 114.
2. PATHWAYS SHOWN DEDICATED FOR TELECOMMUNICATIONS CABLING ONLY, UON.
3. PATHWAYS ROUTES SHOWN CONCEPTUAL. FIELD COORDINATE FINAL ROUTES WITH VA ENGINEER.
4. CABLE TRAY DEPTH REFERS TO TRAY'S LOADING DEPTH.
5. FIRESTOP PENETRATIONS (SLEEVES AND CONDUITS) THROUGH RATED WALLS AND FLOORS TO MATCH WALL RATING.
6. LABEL CONDUITS AT BOTH ENDS. LABEL MUST INDICATE CONDUIT'S DEDICATED USE FOR TELECOMMUNICATIONS CABLING AND LOCATION OF THE CONDUIT'S FAR END.
7. PROVIDE KNOCK-ON BUSHINGS ON CONDUIT AND SLEEVE ENDS.
8. SEISMICALLY BRACE TELECOM PATHWAYS TO MEET LOCAL CODES.

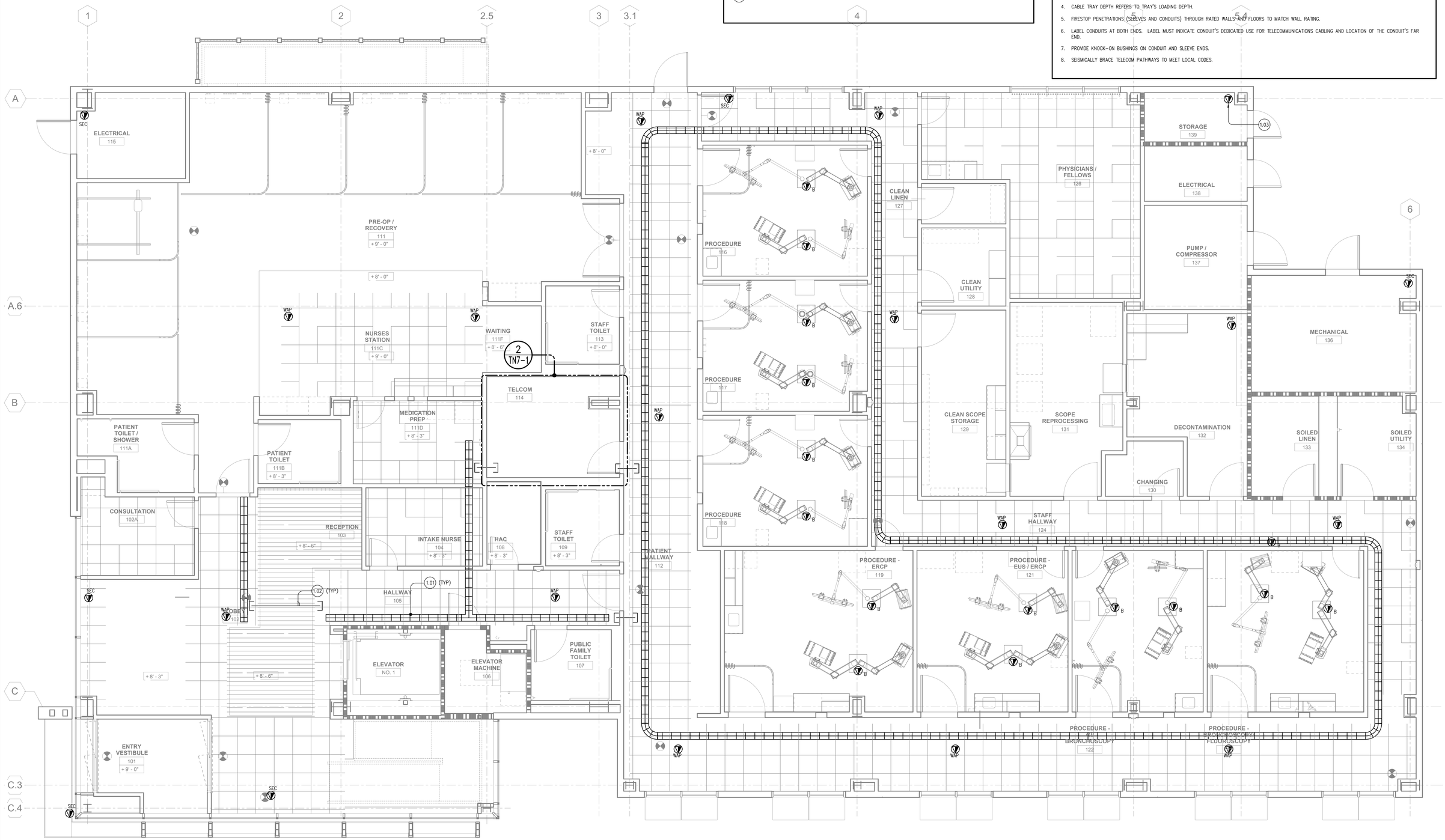


| Issues & Revisions: | Date |
|---|---|
| | |

## CONSULTANTS:

REGISTERED PROFESSIONAL ENGINEER LARRY A. ANDERSON No. 17587 ELECTRICAL STATE OF CALIFORNIA

TEECOM
1333 Broadway
Suite 401
Oakland, CA 94612
510 337 3900
www.teecom.com

TEECOM has undertaken considerable measures to protect the confidentiality of its proprietary information. This document contains information that is the confidential and proprietary property of TEECOM and may not be copied, published, or disclosed to others, or used for any other purpose than review by consent, without the express written consent of an authorized officer of TEECOM. This document must be kept in a file designated as "TEECOM" and kept confidential when not being reviewed as result of consent.

COPYRIGHT 1997-2013 TEECOM, ALL RIGHTS RESERVED.

## KEY PLAN

## ARCHITECT/ENGINEERS:

MEI architecture + interiors
239 9TH STREET, SUITE 201
SAN FRANCISCO, CA 94103
T (415) 682-7376 F (415) 682-7339
www.meiarchitects.com

Drawing Title: TELECOM RCP PLAN - LEVEL 1

Approved: Project Director

Project Title: CONSOLIDATE / EXPAND MEDICAL PROCEDURES MINOR (CEMP)

Location: VANCHCS - MATHER, CA

Date: APRIL 22, 2014 | Checked: JS | Drawn: SA

Project Number: 612-111

Building Number:

Drawing Number: TN6-1 Dwg. of

Office of Facilities Management
Department of Veterans Affairs

VA FORM 08-6231, OCT 1978

FULLY SPRINKLERED

100% CONSTRUCTION DOCUMENTS

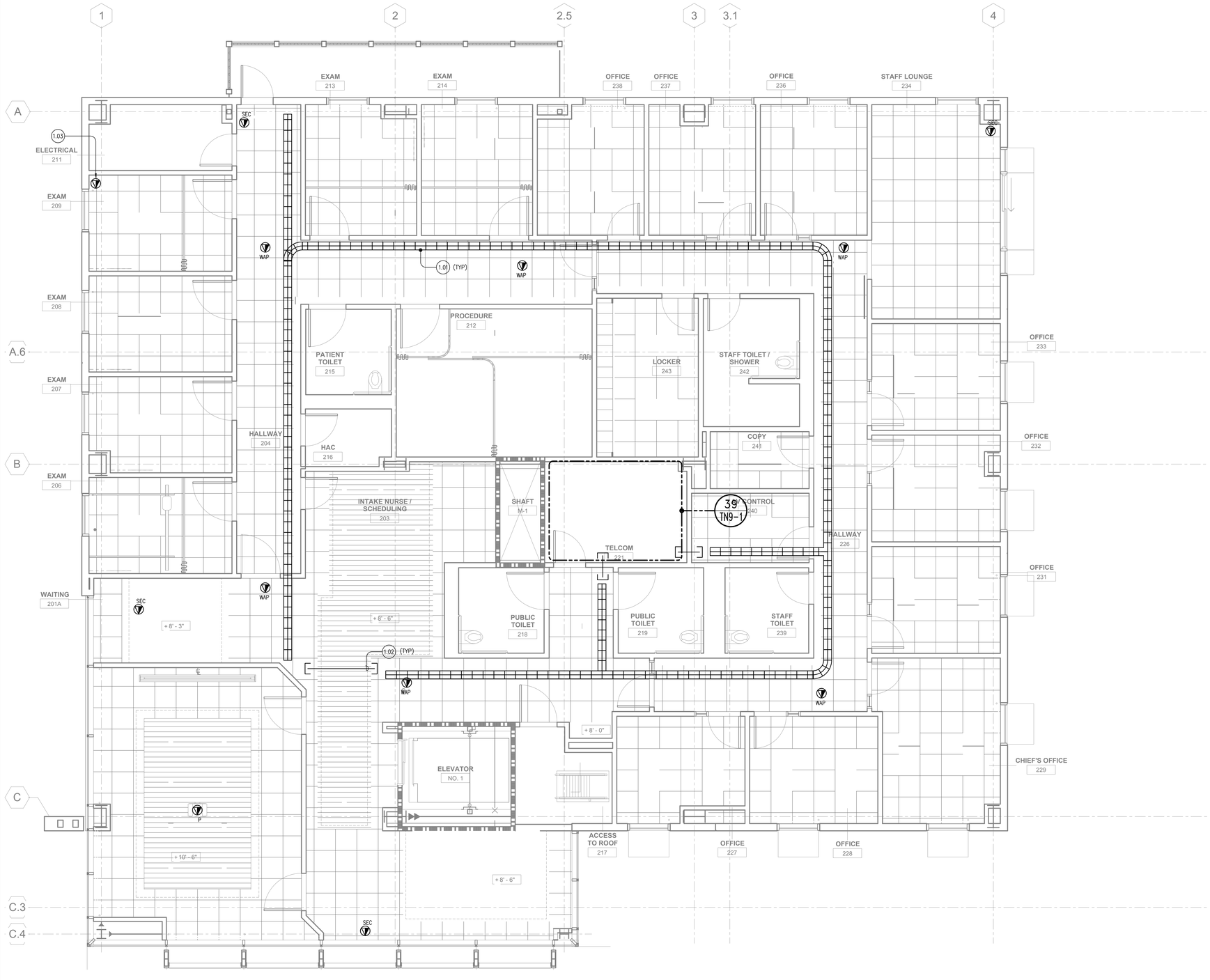


# GENERAL NOTES

1. SERVE TELECOMMUNICATIONS DEVICES/OUTLETS ON THIS SHEET FROM FIRST FLOOR TELECOM ROOM 114.
2. PATHWAYS SHOWN DEDICATED FOR TELECOMMUNICATIONS CABLING ONLY, UON.
3. PATHWAYS ROUTES SHOWN CONCEPTUAL. FIELD COORDINATE FINAL ROUTES WITH VA ENGINEER.
4. CABLE TRAY DEPTH REFERS TO TRAY'S LOADING DEPTH.
5. FIRESTOP PENETRATIONS (SLEEVES AND CONDUITS) THROUGH RATED WALLS AND FLOORS TO MATCH WALL RATING.
6. LABEL CONDUITS AT BOTH ENDS. LABEL MUST INDICATE CONDUIT'S DEDICATED USE FOR TELECOMMUNICATIONS CABLING AND LOCATION OF THE CONDUIT'S FAR END.
7. PROVIDE KNOCK-ON BUSHINGS ON CONDUIT AND SLEEVE ENDS.
8. SEISMICALLY BRACE TELECOM PATHWAYS TO MEET LOCAL CODES.

# KEYNOTES

1.01 12" X 4" CABLE TRAY

1.02 (4) 4" CONDUIT

1.03 PROVIDE DATA CABLE AND PATHWAY TO ROOF FOR SECURITY CAMERA

| Issues & Revisions: | Date |
|---|---|
| | |
| | |
| | |
| | |
| | |
| | |
| | |
| | |

## CONSULTANTS:

REGISTERED PROFESSIONAL ENGINEER LARRY A. ANDERSON No. 17587 ELECTRICAL STATE OF CALIFORNIA

TEECOM
1333 Broadway
Suite 601
Oakland, CA 94612
510 337 2600
www.teecom.com

TEECOM has undertaken considerable measures to protect the confidentiality of its proprietary information. This document contains information that is the confidential and proprietary property of TEECOM and may not be copied, published, or disclosed to others, or used for any other purpose than review by consent, without the express written consent of an authorized officer of TEECOM. This document must be kept in a file designated as "TEECOM" and kept confidential when not being reviewed as result of consent.

COPYRIGHT 1997-2013 TEECOM, ALL RIGHTS RESERVED.

## KEY PLAN

N

## ARCHITECT/ENGINEERS:

MEI architecture + interiors
239 9TH STREET, SUITE 201
SAN FRANCISCO, CA 94103
T (415) 682-7376 F (415) 682-7339
www.meiarchitects.com

Drawing Title: **TELECOM RCP PLAN - LEVEL 2**

Approved: Project Director

Project Title: **CONSOLIDATE / EXPAND MEDICAL PROCEDURES MINOR (CEMP)**

Location: **VANCHCS - MATHER, CA**

| Date | Checked | Drawn |
|---|---|---|
| APRIL 22, 2014 | JS | SA |

Project Number: 612-111

Building Number:

Drawing Number: **TN6-2**

Dwg. of

**Office of Facilities Management**

Department of Veterans Affairs

VA FORM 08-6231, OCT 1978

**FULLY SPRINKLERED**

**100% CONSTRUCTION DOCUMENTS**

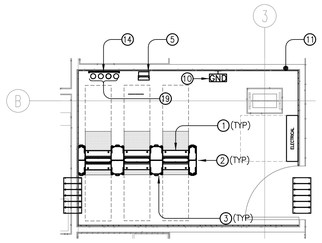


50 IDF #114 – ROOM PLAN
SCALE: 1/4" = 1'-0"

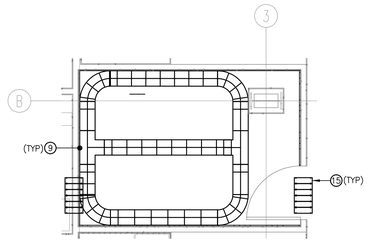


38 IDF #114 – ROOM PLAN OVERHEAD PLAN
SCALE: 1/4" = 1'-0"

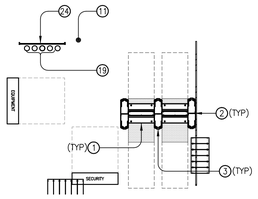


51 IDF #221 – ROOM PLAN
SCALE: 1/4" = 1'-0"

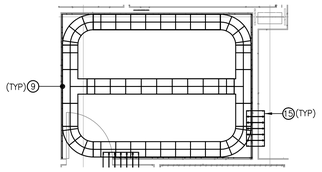


39 IDF #221 – ROOM PLAN OVERHEAD PLAN
SCALE: 1/4" = 1'-0"

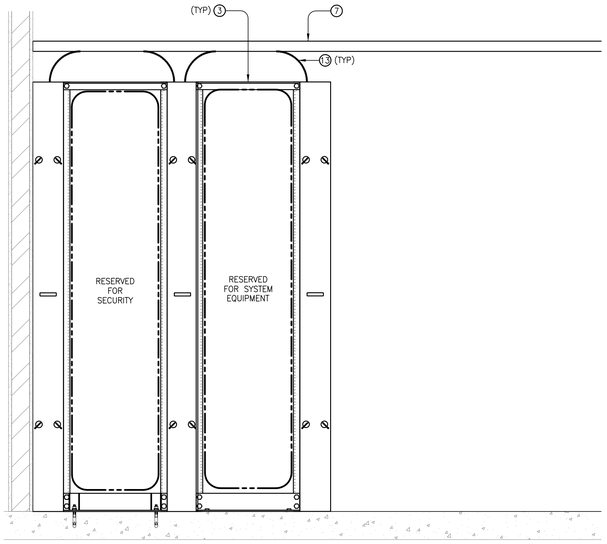


4 IDF ROOM – RACK ELEVATION
SCALE: 1" = 1'-0"

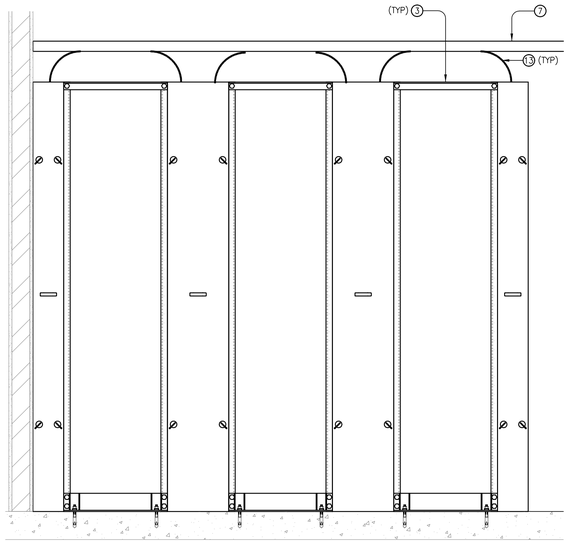


4 IDF ROOM – RACK ELEVATION
SCALE: 1" = 1'-0"

## EQUIPMENT LIST

| EQUIP. # | DESCRIPTION/COMMENT |
|---|---|
| 1 | 2-POST EQUIPMENT RACK |
| 2 | 6" VERTICAL CABLE MANAGER |
| 3 | 10" VERTICAL CABLE MANAGER |
| 4 | WALL MOUNTED BEP, CONTINUE COPPER CABLING TO RACK MOUNTED PATCH PANEL |
| 5 | NOT USED |
| 6 | NOT USED |
| 7 | 12"W X 4"D CABLE TRAY |
| 8 | NOT USED |
| 9 | 12"W CABLE RUNWAY |
| 10 | TELECOM GROUND BUS |
| 11 | 3/4" FIRE RATED PLYWOOD (REFER TO DIVISION 6) |
| 12 | NOT USED |
| 13 | NOT USED |
| 14 | 24" WIDE VERTICAL CABLE RUNWAY |
| 15 | EZ PATH-44 FIRE RATED ASSEMBLY |
| 16 | 4 INCH RISER CONDUIT(S) |
| 17 | ELECTRICAL SUB-PANEL (SEE ELECTRICAL) |
| 18 | WALL MOUNTED EQUIPMENT CABINET |
| 19 | INCOMING SITE CONDUITS FROM SITE VAULT |

## SHEET NOTES

1. PROVIDE 3/4" FIRE RATED 4'X8' PLYWOOD ON WALLS OF ROOM AS SHOWN, STARTING AT 6" AFF TO 8'-6" AFF. MASK FIRE RATING STAMP PRIOR TO PAINTING. USE FLUSH FASTENERS FOR MOUNTING PLYWOOD.
2. PROVIDE RADIUS DROP OUTS WHERE CABLES TRANSITION DOWNWARD FROM OVERHEAD HORIZONTAL CABLE TRAY. RADIUS DROP OUTS ARE NOT REQUIRED WHEN TRANSITIONING TELECOMMUNICATIONS CABLES AT THE RACK BAYS FROM OVERHEAD CABLE TRAY TO VERTICAL CABLE MANAGEMENT SECTIONS.
3. LABEL RACKS AND PATCH PANELS.
4. CABLE TRAY DEPTH REFERS TO TRAY'S LOADING DEPTH.
5. REFER TO ELECTRICAL DRAWINGS FOR ELECTRICAL CIRCUITS/OUTLETS AND LIGHTING REQUIREMENTS.
6. FIRESTOP PENETRATIONS (SLEEVES AND CONDUITS) THROUGH RATED WALLS AND FLOORS/DECKS TO MATCH RATING.
7. SEISMICALLY BRACE CABLE TRAYS AND EQUIPMENT RACKS TO MEET LOCAL SEISMIC CODES.
8. PROVIDE KNOCK-ON BUSHINGS ON CONDUIT AND SLEEVE ENDS.
9. PATHWAYS SHOWN ARE DEDICATED FOR TELECOMMUNICATIONS CABLING ONLY, UON.
10. LABEL CONDUITS AT BOTH ENDS. LABEL MUST INDICATE CONDUIT'S USE FOR TELECOMMUNICATIONS CABLES ONLY AND LOCATION THE CONDUIT'S FAR END TERMINATION.
11. DO NOT PLACE CABINETS, PANELS, PIPING, DUCTING, OR EQUIPMENT IN THE TELECOM ROOMS OTHER THAN THAT SHOWN ON THESE ROOM PLANS AND DETAILS.
12. NEATLY BUNDLE (DRESS CABLES LONGITUDINALLY) AND SUPPORT (USING FASTENERS & TIES DESCRIBED IN SPECS & DRAWINGS) TELECOMMUNICATIONS CABLES ONTO OVERHEAD CABLE TRAY OR RUNWAY. NEATLY BUNDLE AND SUPPORT TELECOMMUNICATIONS CABLES ONTO VERTICALLY MOUNTED CABLE RUNWAY WHEN RISING FROM FLOOR SLEEVES OR DESCENDING FROM CEILING SLEEVES USING APPROVED TIES. NEATLY BUNDLE TELECOMMUNICATIONS CABLES INTO THE BACK OF THE VERTICAL CABLE MANAGEMENT SECTIONS USING APPROVED TIES. DRESS TELECOMMUNICATIONS CABLES FROM THE VERTICAL MANAGEMENT SECTIONS TO THE TERMINATION POSITION. MAXIMUM BUNDLE SIZE: 24 CABLES.

## KEYNOTES

| Issues & Revisions: | Date |
|---|---|
| | |

**CONSULTANTS:**

REGISTERED PROFESSIONAL ENGINEER LARRY A. ANDERSON No. 17587 ELECTRICAL STATE OF CALIFORNIA

TEECOM
1333 Broadway
Suite 601
Oakland, CA 94612
510 337 2800
www.teecom.com

TEECOM has undertaken considerable measures to protect the confidentiality of its proprietary information. This document contains information that is the confidential and proprietary property of TEECOM and may not be copied, published, or disclosed to others, or used for any other purpose than review by consent, without the express written consent of an authorized officer of TEECOM. This document must be kept in a file designated as "TEECOM" and kept confidential when not being reviewed as result of consent.

COPYRIGHT 1997-2013 TEECOM, ALL RIGHTS RESERVED.

**KEY PLAN**

**ARCHITECT/ENGINEERS:**

MEI architecture + interiors
239 9TH STREET, SUITE 201
SAN FRANCISCO, CA 94103
T (415) 682-7376 F (415) 682-7339
www.meiarchitects.com

Drawing Title: **TELECOM ROOM PLANS**

Approved: Project Director

Project Title: **CONSOLIDATE / EXPAND MEDICAL PROCEDURES MINOR (CEMP)**

Location: **VANCHCS - MATHER, CA**

Date: **APRIL 22, 2014** | Checked: **JS** | Drawn: **SA**

Project Number: **612-111**

Building Number:

Drawing Number: **TN7-1**
Dwg. of

**Office of Facilities Management**

Department of Veterans Affairs

VA FORM 08-6231, OCT 1978

**FULLY SPRINKLERED**

**100% CONSTRUCTION DOCUMENTS**

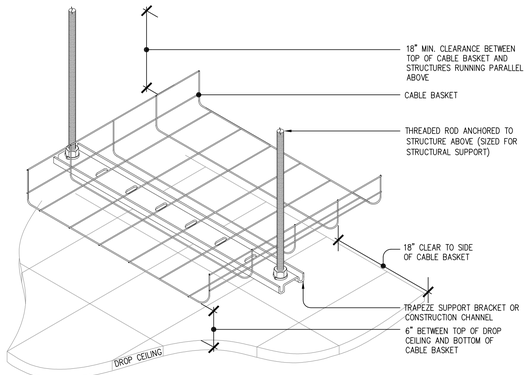


NOTE:
1. REFER TO FLOOR PLANS FOR CABLE BASKET SIZE(S) AND ROUTING.
2. TRAPEZE SUPPORT BRACKET MAY VARY. SHOWN HERE AS EXAMPLE ONLY.
3. DETERMINE SPAN BETWEEN CABLE BASKET SUPPORTS ACCORDING TO MANUFACTURER'S REQUIREMENTS OR GUIDELINES AND LOCAL SEISMIC CODES.
4. ALSO DETERMINE BRACING REQUIREMENTS BASED ON LOCAL SEISMIC CODES.
5. SUPPORT CABLE BASKET WITHIN 24" ON BOTH SIDES OF ANY TWO JOINED SECTIONS.
6. REFER TO ARCHITECTURAL DRAWINGS FOR CEILING TYPE AND HEIGHT. SHOWN HERE FOR CLARITY ONLY.

1 CABLE BASKET SUPPORT – TRAPEZE

SCALE: NONE

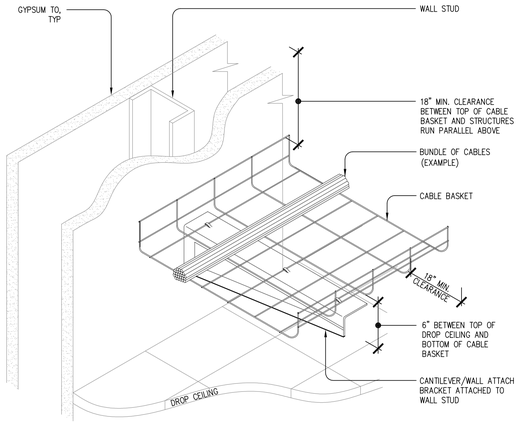


NOTE:
1. SECURE CANTILEVER BRACKET TO WALL USING FASTENERS APPROPRIATE TO STUD TYPE.
2. DETERMINE CANTILEVER BRACKET SEPARATION ACCORDING TO CABLE BASKET LOAD AND SPAN AND TYPE OF STUD.
3. ALSO DETERMINE SUPPORT REQUIREMENTS BASED ON LOCAL SEISMIC CODES.
4. SUPPORT CABLE BASKET WITHIN 24" ON BOTH SIDES OF ANY CONNECTION TO A FITTING.
5. REFER TO TELECOM FLOOR PLANS FOR CABLE BASKET SIZE(S) AND ARCHITECTURAL PLANS FOR DROP CEILING HEIGHT. 6. REFER TO ARCHITECTURAL DRAWINGS FOR WALL TYPE AND CEILING TYPE. SHOWN HERE FOR CLARITY ONLY.

2 CABLE BASKET WALL SUPPORT

SCALE: NONE

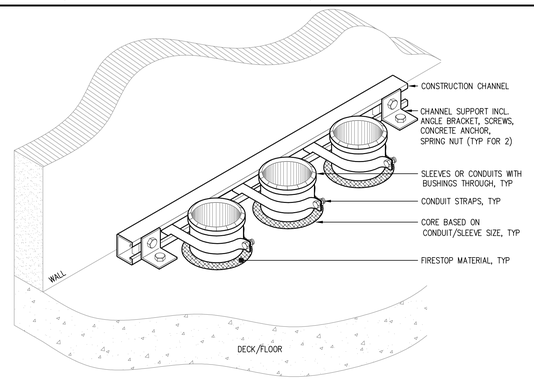


NOTE:
1. REFER TO PATHWAYS RISER DIAGRAM SLEEVES/CONDUITS SIZE AND QUANTITY.
2. REFER TO ROOM PLANS FOR RISER SLEEVES/CONDUITS LOCATION.
3. REFER TO FIRESTOP DETAILS FOR DECK PENETRATION AND RISER SLEEVE/CONDUIT FIREPROOFING. 4. BUSH AND SUPPORT SLEEVES/CONDUITS AT BOTH ENDS.
5. REFER TO ARCHITECTURAL DRAWINGS FOR WALL AND DECK TYPE. SHOWN HERE FOR CLARITY ONLY.

6 RISER CONDUIT INSTALLATION THROUGH CORES

SCALE: NONE

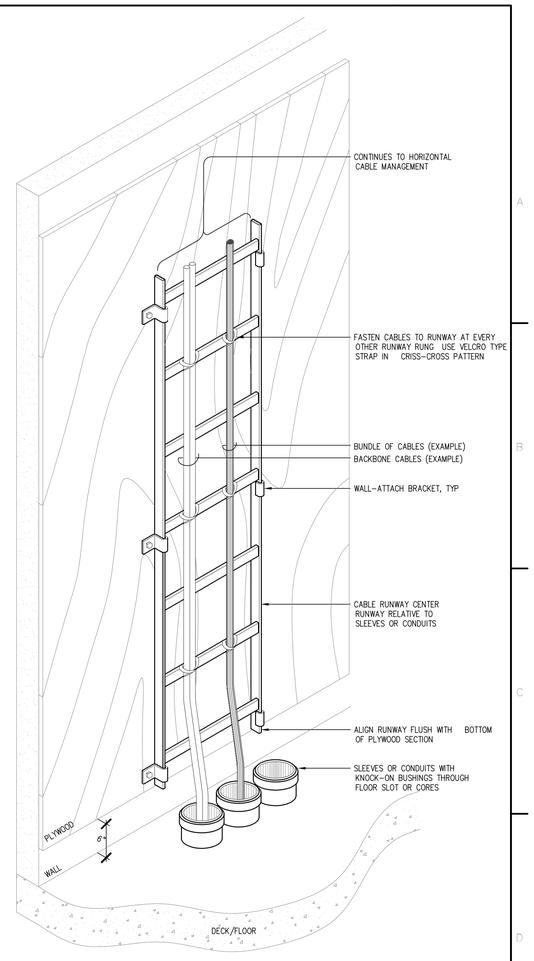


NOTE:
1. REFER TO FIRESTOP DETAILS FOR DECK PENETRATION FIREPROOFING.
2. REFER TO ROOM PLANS AND DETAILS FOR CABLE RUNWAY SIZE AND LOCATION.
3. REFER TO ROOM PLANS AND DETAILS FOR SLEEVE/CONDUIT SIZES AND QUANTITIES.
4. REFER TO ARCHITECTURAL DRAWINGS FOR WALL AND DECK TYPE. SHOWN HERE FOR CLARITY ONLY.

7 VERTICAL CABLE ROUTING THROUGH FLOOR

SCALE: NONE

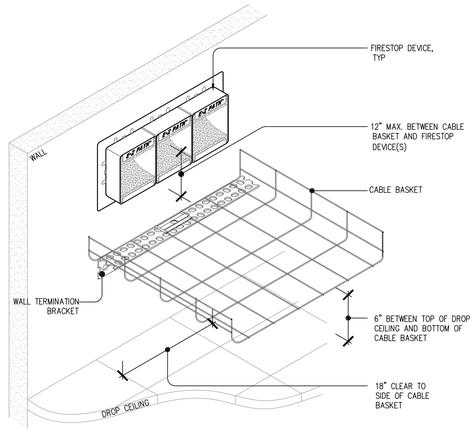


NOTE:
1. ALIGN FIRESTOP DEVICE(S) WITH HORIZONTAL SECTION OF CABLE BASKET.
2. REFER TO FLOOR PLANS FOR CABLE BASKET SIZE AND ROUTE(S).
3. WALL TERMINATION BRACKET MAY DIFFER BETWEEN MANUFACTURERS. SHOWN HERE AS EXAMPLE.
4. REFER TO FLOOR PLANS FOR FIRESTOP DEVICE SIZE AND QUANTITY.
5. REFER TO ARCHITECTURAL DRAWINGS FOR WALL TYPE AND CEILING TYPE. SHOWN HERE FOR CLARITY ONLY.

4 FIRESTOP DEVICE TO CABLE BASKET TRANSITION

SCALE: NONE

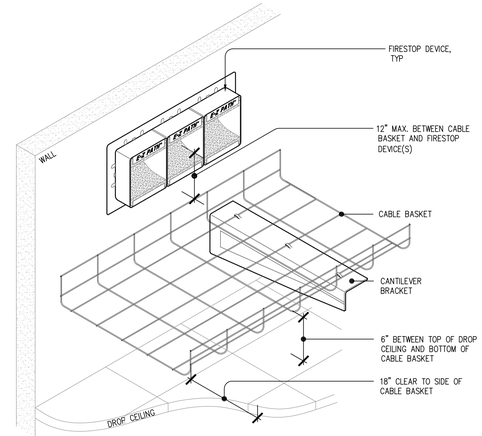


NOTE:
1. REFER TO FLOOR PLANS FOR CABLE BASKET SIZE AND ROUTE(S).
2. CANTILEVER BRACKET MAY DIFFER BETWEEN MANUFACTURERS. SHOWN HERE AS EXAMPLE.
3. REFER TO FLOOR PLANS FOR FIRESTOP DEVICE SIZE AND QUANTITY.
4. REFER TO ARCHITECTURAL DRAWINGS FOR WALL TYPE AND CEILING TYPE. SHOWN HERE FOR CLARITY ONLY.

5 FIRESTOP DEVICE TO CABLE BASKET TRANSITION

SCALE: NONE

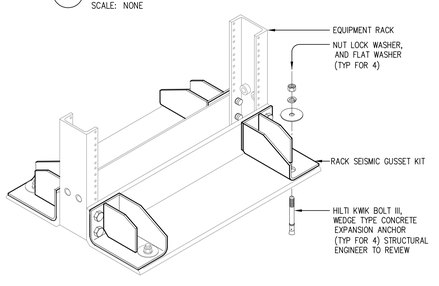


NOTE: 1. REFER TO ROOM PLANS FOR EQUIPMENT RACK TYPE, SIZE, AND LOCATION(S).

3 2-POST EQUIPMENT RACK ANCHORING WITH SEISMIC GUSSET KIT

SCALE: NONE

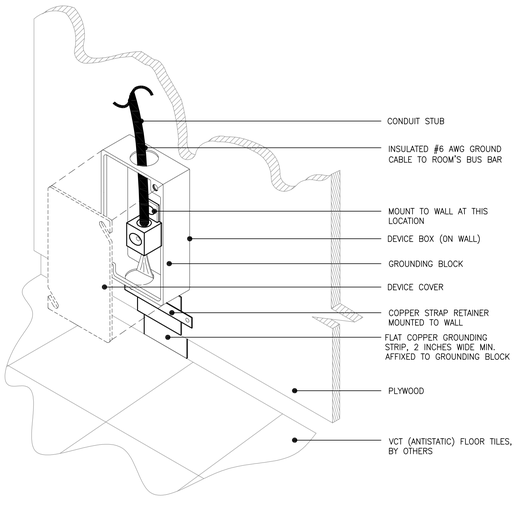


9 VCT TILE GROUNDING DETAIL

SCALE: NONE

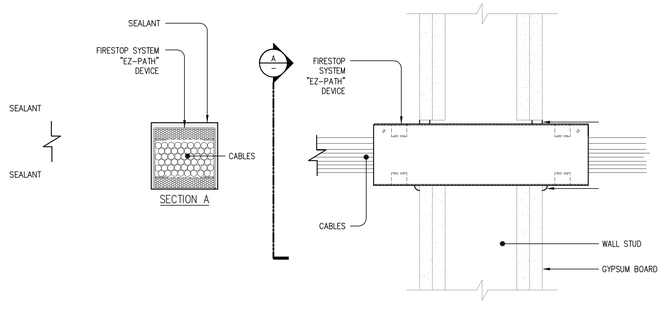


UL SYSTEMS W-L-3219
T = 3/4 OR 1 HR
F = 1 OR 2 HR

CONSULT CURRENT UNDERWRITERS LABORATORIES "FIRE RESISTANCE DIRECTORY" FOR DETAILS

8 FIRESTOP FRAMED GYPSUM WALLS "EZ-PATH"

SCALE: NONE

Issues & Revisions: | Date

**CONSULTANTS:**

REGISTERED PROFESSIONAL ENGINEER LARRY A. ANDERSON No. 17587 ELECTRICAL STATE OF CALIFORNIA

TEECOM
1333 Broadway
Suite 401
Oakland, CA 94612
510 337 3900
www.teecom.com

TEECOM has undertaken considerable measures to protect the confidentiality of its proprietary information. This document contains information that is the confidential and proprietary property of TEECOM and may not be copied, published, or disclosed to others, or used for any other purpose than review by consent, without the express written consent of an authorized officer of TEECOM. This document must be kept in a file designated as "TEECOM" and kept confidential when not being reviewed as result of consent.

COPYRIGHT 1997-2013 TEECOM, ALL RIGHTS RESERVED.

**KEY PLAN**

**ARCHITECT/ENGINEERS:**

MEI architecture + interiors
239 9TH STREET, SUITE 201
SAN FRANCISCO, CA 94103
T (415) 682-7376 F (415) 682-7339
www.meiarchitects.com

Drawing Title: **TELECOM DETAILS**

Approved: Project Director

Project Title: **CONSOLIDATE / EXPAND MEDICAL PROCEDURES MINOR (CEMP)**

Location: **VANCHCS - MATHER, CA**

Date: **APRIL 22, 2014** | Checked: **JS** | Drawn: **SA**

Project Number: **612-111**

Building Number:

Drawing Number: **TN9-1** Dwg. of

**Office of Facilities Management**

Department of Veterans Affairs

VA FORM 08-6231, OCT 1978

**FULLY SPRINKLERED** **100% CONSTRUCTION DOCUMENTS**

# SECURITY TITLE SHEET

## CONVENTIONS

NOT ALL SYMBOLS MAY BE USED ON THIS PROJECT

- 1.01 — KEY NOTE
- 001 — DOOR NUMBER
- 1 / TY1.1 — DETAIL REFERENCE
  - SHEET NUMBER (TY=SECURITY)
  - DETAIL DESIGNATION
- 1 / TH1.1 — ELEVATION REFERENCE
  - SHEET NUMBER (TY=SECURITY)
  - DETAIL DESIGNATION
- CR001 — SECURITY DEVICE ID REFERENCE
  - DEVICE NUMBER
  - DEVICE TYPE
    - CR = CARD READER
    - K = CCTV CAMERA

## PATHWAYS

NOT ALL SYMBOLS MAY BE USED ON THIS PROJECT

- UNDERGROUND TELECOMMUNICATION CONDUIT DUCT BANK.
- CONDUIT RUN EXPOSED ON WALL OR CEILING.
- CONDUIT RUN CONCEALED IN SLAB, UNDER SLAB OR UNDERGROUND.
- CONDUIT RUN CONCEALED IN WALL OR CEILING.
- CONDUIT HOMERUN, CONTINUOUS RUN TO PANEL OR EQUIPMENT CABINET.
- CONDUIT TURNED UP.
- CONDUIT TURNED DOWN.
- "BASKET STYLE" CABLE TRAY, SUSPENDED FROM STRUCTURE ABOVE, UON.
- CONDUIT STUB THROUGH WALL OR FLOOR, NUMBERS INDICATE SIZE AND QUANTITY.
- "EZ-PATH" TYPE FIRESTOP ASSEMBLY, NUMBERS INDICATE SIZE AND QUANTITY.

## SECURITY

NOT ALL SYMBOLS MAY BE USED ON THIS PROJECT

- CR M — CARD READER, MOUNTED +42" AFF UON.
  - (BLANK) = STANDARD
  - M = MULLION MOUNT
  - K = KEYPAD
- EL — ELECTRIC MORTISE LOCK
- ED — ELECTRIC EXIT DEVICE
- ES — ELECTRIC STRIKE
- C — TRANSFER HINGE
  - C = DOOR POSITION & FEED-THROUGH
  - E = ELECTRIC FEED-THROUGH
- C — MAGNETIC DOOR CONTACT MOUNTED IN DOOR HEADER
- DB — DURESS BUTTON
- DR — DOOR RELEASE
- RX — REX MOTION DETECTOR, WALL OR CEILING MOUNTED ABOVE DOOR
- PS — POWER SUPPLY
- FIX — FIXED CCTV CAMERA
- DOME — PARAPET MOUNTED PTZ DOME CAMERA
- SECURITY EQUIPMENT
- IR — INTERFACE RELAY

## GENERAL NOTES

APPLIES TO ALL SHEETS

1. REFER TO WRITTEN SPECIFICATIONS FOR PROJECT SCOPE, GENERAL REQUIREMENTS, PRODUCT SPECS, AND INSTALLATION REQUIREMENTS.
2. DRAWINGS INDICATE APPROXIMATE LOCATIONS OF CEILING MOUNTED DEVICES. REFER TO ARCHITECTURAL REFLECTED CEILING PLANS AND COORDINATE EXACT LOCATIONS WITH LIGHT FIXTURES AND OTHER DEVICES.
3. MOUNTING HEIGHTS SHOWN ARE FROM FINISHED FLOOR TO THE CENTERLINE OF THE DEVICE. MOUNTING HEIGHTS SHALL BE AS SHOWN ON THE SYMBOLS LIST UNLESS OTHERWISE NOTED ON THE PLANS OR IN THE SPECIFICATIONS. REFER TO ARCHITECTURAL DRAWINGS FOR ADDITIONAL INFORMATION.
4. ELECTRICAL MATERIALS AND EQUIPMENT SHALL BE LISTED BY UNDERWRITERS LABORATORIES AND BEAR THEIR LABEL, UON.
5. REPORT TO THE ENGINEER ANY OBSERVATIONS OF CONDITIONS WHICH ARE DISCOVERED IN THE BUILDING WHICH WOULD PREVENT THE CORRECT INSTALLATION OF THE DESIGNED SYSTEM.
6. CONDUIT ROUTING (WHERE SHOWN) IS ESSENTIALLY DIAGRAMMATIC.
7. SEAL CONDUIT AND RACEWAY PENETRATIONS THROUGH FIRE RATED WALLS AND FLOORS TO MAINTAIN THE FIRE SEPARATION RATING.
8. REFER TO ARCHITECTURAL ELEVATIONS FOR EXACT LOCATIONS OF WALL MOUNTED DEVICES. DRAWINGS INDICATE APPROXIMATE LOCATIONS ONLY.
9. PROVIDE NECESSARY EQUIPMENT AND/OR ACCESSORIES FOR A FULLY FUNCTIONAL SYSTEM THAT MEETS INTENDED DESIGN WHETHER EXPRESSLY SPECIFIED OR NOT.
10. PROVIDE REQUIRED CONDUIT, BACKBOXES, JUNCTION BOXES, AND SECURITY EQUIPMENT ENCLOSURES, WHETHER ON DRAWINGS OR NOT, UON.
11. MAINTAIN A COPY OF THE SPECIFICATIONS ACCOMPANYING DRAWINGS ON THE JOB SITE AT ALL TIMES FOR REFERENCE. BE ABLE TO PRESENT THE SPECIFICATIONS UPON REQUEST.
12. REFERENCE OTHER TRADE'S DRAWINGS AND SPECIFICATIONS (E.G., TELECOMMUNICATIONS) FOR ADDITIONAL INFORMATION AND REQUIREMENTS.
13. PROVIDE PLASTIC BUSHINGS ON EXPOSED ENDS OF CONDUIT AND SLEEVES.
14. PROVIDE APPROPRIATE NYLON PULL ROPE IN CONDUITS.
15. PROVIDE CONDUIT PLUGS IN ALL OSP SECURITY CONDUITS ACCORDING TO THE CABLE USE AND USE BLANK PLUGS FOR UNUSED CONDUITS.
16. MOUNT EQUIPMENT OR DEVICES, SUCH AS RUNWAY, CONDUITS, J-HANGER, AND PULL BOXES ACCORDING TO STATE AND LOCAL CODES FOR SEISMIC BRACING.
17. LABEL SECURITY CABLES ACCORDING TO SPECIFICATIONS. PROVIDE LABELS AT BOTH ENDS. VERIFY FORMAT AND INFORMATION FIELDS WITH AND RECEIVE APPROVAL FROM VA COR PRIOR TO LABELING.
18. LABEL ALL SECURITY CONDUITS AT EACH END OF THE CONDUIT IDENTIFYING THE DESTINATION AND USE AS "SECURITY". REFER TO ELECTRICAL SPECIFICATIONS AND DRAWINGS FOR ADDITIONAL INFORMATION.
19. REFER TO SECTION 08 71 00 FOR EXIT DEVICE HARDWARE REQUIRING A LOCAL POWER SUPPLY. INTERCONNECT LOW VOLTAGE CABLES BETWEEN SYSTEM AND LOCKS.
20. SECURITY DOOR HARDWARE TO FAIL SECURE, UON.
21. EXIT DEVICE ELECTRIC HARDWARE TO HAVE MANUFACTURERS POWER SUPPLIES AND BACK-UP BATTERIES WHERE REQUIRED FOR NORMAL AND EMERGENCY OPERATION.
22. EGRESS HARDWARE SHALL BE OPERABLE AT ALL TIMES. SECURITY HARDWARE SHALL NOT PROHIBIT EGRESS.
23. INTERFACE SECURITY CONTROLLED DOOR HARDWARE WITH THE FIRE ALARM SYSTEM AS TO NOT IMPEDE EXITING UNDER FIRE ALARM CONDITIONS
24. PROVIDE EXPANSION/DEFLECTION FITTING FOR CONDUITS CROSSING EXPANSION JOINTS.

## ABBREVIATIONS

NOT ALL SYMBOLS MAY BE USED

| | |
|---|---|
| A | AMPERES |
| ACAMS | ACCESS CONTROL AND ALARM MONITORING SYSTEM |
| AFF | ABOVE FINISHED FLOOR |
| AWG | AMERICAN WIRE GAUGE |
| BAS | BUILDING AUTOMATION SYSTEM |
| BDF | BUILDING DISTRIBUTION FACILITY |
| C | CONDUIT |
| CAT3 | CATEGORY 3 TWISTED PAIR UTP CABLE |
| CAT5E | CATEGORY 5E TWISTED PAIR UTP CABLE |
| CAT6 | CATEGORY 6 TWISTED PAIR UTP CABLE |
| CATV | COMMUNITY ANTENNA TELEVISION |
| CEC | CCTV EQUIPMENT CABINET |
| DIV | DIVISION |
| (E) | EXISTING |
| EC | ELECTRICAL CONTRACTOR |
| EMS | ELECTRIC MANAGEMENT SYSTEM |
| EMT | ELECTRICAL METALLIC TUBING |
| (F) | FUTURE |
| FACP | FIRE ALARM CONTROL PANEL |
| FATC | FIRE ALARM TERMINAL CABINET |
| FO | FIBER OPTIC |
| GC | GENERAL CONTRACTOR |
| IDF | INTERMEDIATE DISTRIBUTION FACILITY |
| JB | JUNCTION BOX |
| LCP | LIGHTING CONTRAOL PANEL |
| MDF | MAIN DISTRIBUTION FACILITY |
| MH | MAINTENANCE HOLE |
| MM | MULTIMODE FIBER OPTIC CABLE |
| MPOE | MINIMUM POINT OF ENTRY |
| MT | EMPTY |
| N | NEW |
| NC | NORMALLY CLOSED |
| NO | NORMALLY OPEN |
| NTS | NOT TO SCALE |
| OC | ON CENTER |
| OSP | OUTSIDE PLANT |
| PB | PULL BOX |
| PNL | PANEL |
| PR | PAIR (OF COPPER CONDUCTORS) |
| PVC | POLYVINYL CHLORIDE |
| REX | REQUEST TO EXIT |
| SAD | SEE ARCHITECTURAL DRAWINGS |
| SEC | SECURITY EQUIPMENT CABINET |
| SM | SINGLEMODE OPTICAL FIBER |
| SCTP | SCREENED TWISTED PAIR |
| STR | STRAND(S) OF FIBER |
| STP | SHEILDED TWISTED PAIR |
| TBB | TELECOM BONDING BACKBONE |
| TBC | TELECOM BONDING CONDUCTOR |
| TGB | TELECOM GROUNDING BUSBAR |
| TMGB | TELECOM MAIN GROUNDING BUSBAR |
| TYP | TYPICAL |
| UON | UNLESS OTHERWISE NOTED |
| UPS | UNINTERRUPTIBLE POWER SUPPLY |
| UTP | UNSHEILDED TWISTED PAIR |
| V | VOLTS |
| WP | WEATHERPROOF |

Issues & Revisions: | Date

**CONSULTANTS:**

REGISTERED PROFESSIONAL ENGINEER — LARRY A. ANDERSON — No. 17587 — ELECTRICAL — STATE OF CALIFORNIA

TEECOM
1333 Broadway
Suite 601
Oakland, CA 94612
510 337 2800
www.teecom.com

TEECOM has undertaken considerable measures to protect the confidentiality of its proprietary information. This document contains information that is the confidential and proprietary property of TEECOM and may not be copied, published, or disclosed to others, or used for any other purpose than review by consent, without the express written consent of an authorized officer of TEECOM. This document must be kept in a file designated as "TEECOM" and kept confidential when not being reviewed as result of consent.

COPYRIGHT 1997-2013 TEECOM, ALL RIGHTS RESERVED.

**KEY PLAN**

**ARCHITECT/ENGINEERS:**

MEI architecture + interiors
239 9TH STREET, SUITE 201
SAN FRANCISCO, CA 94103
T (415) 682-7376 F (415) 682-7339
www.meiarchitects.com

Drawing Title: **SYMBOLS LIST AND GENERAL NOTES**

Approved: Project Director

Project Title: **CONSOLIDATE / EXPAND MEDICAL PROCEDURES MINOR (CEMP)**

Location: **VANCHCS - MATHER, CA**

Date: **APRIL 22, 2014** | Checked: **JS** | Drawn: **SA**

Project Number: **612-111**

Building Number:

Drawing Number: **TY0-1** Dwg. of

**Office of Facilities Management**

Department of Veterans Affairs

VA FORM 08-6231, OCT 1978

**FULLY SPRINKLERED** **100% CONSTRUCTION DOCUMENTS**

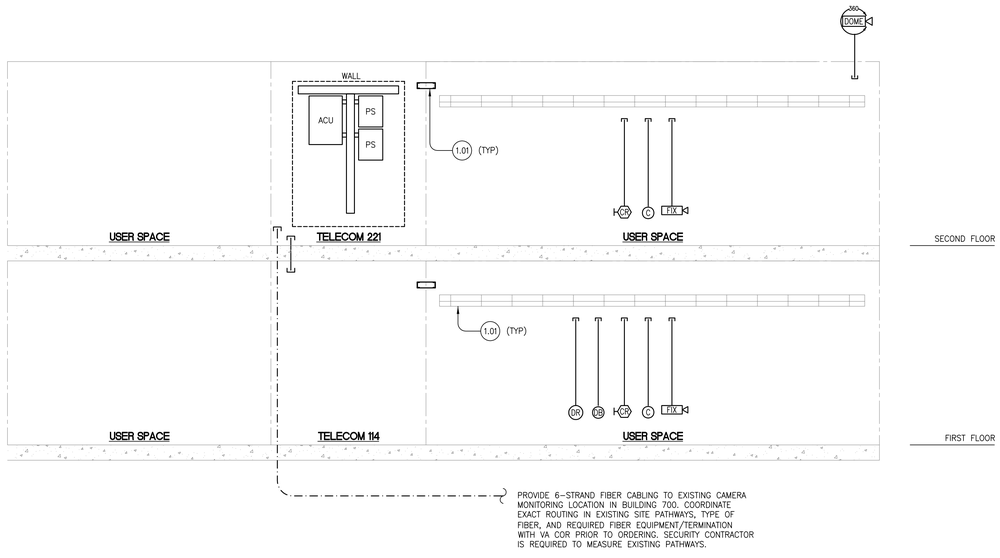


1 SECURITY RISER DIAGRAM
SCALE: NONE

## GENERAL NOTES

1. THIS DRAWING REPRESENTS A DIAGRAMMATIC OVERVIEW OF THE SECURITY SYSTEM. REFER TO FLOOR PLANS FOR ESTIMATING PATHWAY AND CABLE LENGTHS.
2. PROVIDE FIRESTOP MATERIAL IN AND AROUND SLEEVE AND CONDUITS THAT PENETRATE FIRE RATED WALLS AND FLOORS.
3. UTILIZE CABLE TRAY AND VERTICAL CABLE MANAGERS WITHIN SIGNAL ROOMS FOR CABLE ORGANIZATION. COORDINATE CABLE LOCATION ON TRAY WITH TELECOMMUNICATIONS CONTRACTOR.

## KEYNOTES

1.01 EZ-PATH, CABLE TRAY PATHWAY, AND RISER CONDUIT PROVIDED BY TELECOM. REFER TO TELECOM RISER DIAGRAM, FOR ADDITIONAL INFORMATION.

| Issues & Revisions: | Date |
|---|---|
| | |
| | |
| | |
| | |
| | |
| | |
| | |
| | |

**CONSULTANTS:**

REGISTERED PROFESSIONAL ENGINEER LARRY A. ANDERSON No. 17587 ELECTRICAL STATE OF CALIFORNIA

TEECOM
1333 Broadway
Suite 601
Oakland, CA 94612
510.337.2600
www.teecom.com

TEECOM has undertaken considerable measures to protect the confidentiality of its proprietary information. This document contains information that is the confidential and proprietary property of TEECOM and may not be copied, published, or disclosed to others, or used for any other purpose than review by consent, without the express written consent of an authorized officer of TEECOM. This document must be kept in a file designated as "TEECOM" and kept confidential when not being reviewed as result of consent.

COPYRIGHT 1997-2013 TEECOM, ALL RIGHTS RESERVED.

**KEY PLAN**

N

**ARCHITECT/ENGINEERS:**

IMEI architecture + interiors
239 9TH STREET, SUITE 201
SAN FRANCISCO, CA 94103
T (415) 682-7376 F (415) 682-7339
www.meiarchitects.com

Drawing Title
**SECURITY RISER DIAGRAM**

Approved: Project Director

Project Title
**CONSOLIDATE / EXPAND MEDICAL PROCEDURES MINOR (CEMP)**

Location
**VANCHCS - MATHER, CA**

| Date | Checked | Drawn |
|---|---|---|
| APRIL 22, 2014 | JS | SA |

Project Number
612-111

Building Number

Drawing Number
**TY1-1**
Dwg. of

**Office of Facilities Management**

Department of Veterans Affairs

VA FORM 08-6231, OCT 1978

**FULLY SPRINKLERED**

**100% CONSTRUCTION DOCUMENTS**

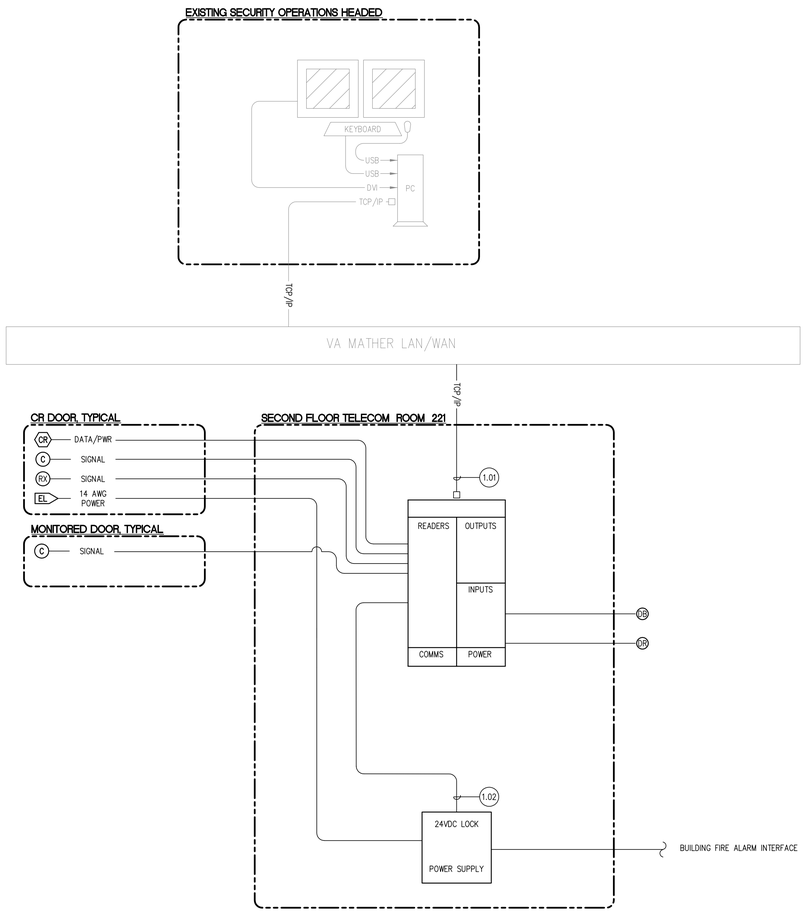


1 ACAMS BLOCK DIAGRAM
SCALE: NONE

## GENERAL NOTES

1. COORDINATE TCP/IP ADDRESSES WITH VA COR.
2. ACAMS BLOCK DIAGRAM IS DIAGRAMMATIC ONLY. PROVIDE ACU PANELS AND POWER SUPPLIES TO SUPPORT THE FIELD DEVICES SHOWN ON FLOOR PLANS.

## KEYNOTES

1.01 PROVIDE PATCH CORD FROM SECURITY PANEL TO VA PROVIDED SWITCH TO DEVICE. COORDINATION NETWORK CONNECTION REQUIREMENTS WITH VA COR.

1.02 INTERCONNECT LOCK OUTPUTS FOR EACH CARD READER DOOR WITH DRY CONTACT INPUT ON LOCK POWER SUPPLY. DO NOT SWITCH LOCK COIL LOAD THROUGH ACU RELAYS.

Issues & Revisions: | Date

**CONSULTANTS:**

REGISTERED PROFESSIONAL ENGINEER LARRY A. ANDERSON No. 17587 ELECTRICAL STATE OF CALIFORNIA

TEECOM
1333 Broadway
Suite 601
Oakland, CA 94612
510 337 2600
www.teecom.com

TEECOM has undertaken considerable measures to protect the confidentiality of its proprietary information. This document contains information that is the confidential and proprietary property of TEECOM and may not be copied, published, or disclosed to others, or used for any other purpose than review by consent, without the express written consent of an authorized officer of TEECOM. This document must be kept in a file designated as "TEECOM" and kept confidential when not being reviewed as result of consent.

COPYRIGHT 1997-2013 TEECOM, ALL RIGHTS RESERVED.

**KEY PLAN**

N

**ARCHITECT/ENGINEERS:**

MEI architecture + interiors
239 9TH STREET, SUITE 201
SAN FRANCISCO, CA 94103
T (415) 682-7376 F (415) 682-7339
www.meiarchitects.com

Drawing Title: **SECURITY ACAMS BLOCK DIAGRAM**

Approved: Project Director

Project Title: **CONSOLIDATE / EXPAND MEDICAL PROCEDURES MINOR (CEMP)**

Location: **VANCHCS - MATHER, CA**

Date: **APRIL 22, 2014** | Checked: **JS** | Drawn: **SA**

Project Number: **612-111**

Building Number:

Drawing Number: **TY1-2**
Dwg. of

**Office of Facilities Management**

Department of Veterans Affairs

VA FORM 08-6231, OCT 1978

**FULLY SPRINKLERED** **100% CONSTRUCTION DOCUMENTS**

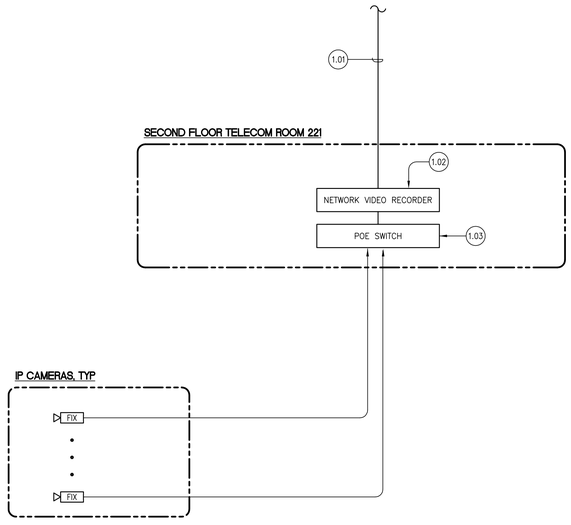


1 VSS BLOCK DIAGRAM
SCALE: NONE

## GENERAL NOTES

1. COORDINATE TCP/IP ADDRESSES WITH OWNER VA COR.
2. VIDEO SURVEILLANCE SYSTEM BLOCK DIAGRAM IS DIAGRAMMATIC ONLY. PROVIDE VIDEO RECORDERS, POWER SUPPLIES, ETC TO SUPPORT THE FIELD DEVICES SHOWN ON FLOOR PLANS.

## KEYNOTES

1.01 PROVIDE 6-STRAND FIBER CABLING TO EXISTING CAMERA MONITORING LOCATION IN BUILDING 700. COORDINATE EXACT ROUTING IN EXISTING SITE PATHWAYS, TYPE OF FIBER, AND REQUIRED FIBER EQUIPMENT/TERMINATION WITH VA COR PRIOR TO ORDERING. SECURITY CONTRACTOR IS REQUIRED TO MEASURE EXISTING PATHWAYS.

1.02 PROVIDE RACK MOUNTED NETWORK VIDEO RECORDER WITH KVM MONITOR AND KEYBOARD WITH REQUIRED SOFTWARE.

1.03 PROVIDE RACK MOUNTED POE SWITCHES TO SUPPORT IP CAMERAS. PRIOR TO ORDERING VERIFY PRODUCT WITH VA COR.

| Issues & Revisions: | Date |
|---|---|
| | |

**CONSULTANTS:**

REGISTERED PROFESSIONAL ENGINEER LARRY A. ANDERSON No. 17587 ELECTRICAL STATE OF CALIFORNIA

TEECOM
1333 Broadway
Suite 601
Oakland, CA 94612
510 337 2600
www.teecom.com

TEECOM has undertaken considerable measures to protect the confidentiality of its proprietary information. This document contains information that is the confidential and proprietary property of TEECOM and may not be copied, published, or disclosed to others, or used for any other purpose than review by consent, without the express written consent of an authorized officer of TEECOM. This document must be kept in a file designated as "TEECOM" and kept confidential when not being reviewed as result of consent.

COPYRIGHT 1997-2013 TEECOM, ALL RIGHTS RESERVED.

**KEY PLAN**

N

**ARCHITECT/ENGINEERS:**

MEI architecture + interiors
239 9TH STREET, SUITE 201
SAN FRANCISCO, CA 94103
T (415) 682-7376 F (415) 682-7339
www.meiarchitects.com

Drawing Title: **SECURITY VIDEO SURVEILLANCE SYSTEM BLOCK DIAGRAM**

Approved: Project Director

Project Title: **CONSOLIDATE / EXPAND MEDICAL PROCEDURES MINOR (CEMP)**

Location: **VANCHCS - MATHER, CA**

Date: **APRIL 22, 2014** | Checked: **JS** | Drawn: **SA**

Project Number: **612-111**

Building Number:

Drawing Number: **TY1-3** Dwg. of

**Office of Facilities Management**

Department of Veterans Affairs

VA FORM 08-6231, OCT 1978

**FULLY SPRINKLERED**

**100% CONSTRUCTION DOCUMENTS**

# GENERAL NOTES

1. SERVE SECURITY DEVICES ON THIS SHEET FROM PANEL SEC 1.1 LOCATED IN THE SECOND FLOOR TELECOM ROOM 221.
2. REFER TO ARCHITECTURAL PLANS FOR EXACT LOCATION OF SECURITY DEVICES.
3. ROUTE SECURITY CABLING IN J-HANGERS, SUPPORTED EVERY 5 FEET, UNTIL CABLE TRAY.
4. FIRESTOP PATHWAYS THROUGH FIRE RATED WALLS.

| Issues & Revisions: | Date |
|---|---|
| | |

## CONSULTANTS:

REGISTERED PROFESSIONAL ENGINEER LARRY A. ANDERSON No. 17587 ELECTRICAL STATE OF CALIFORNIA

TEECOM
1333 Broadway
Suite 601
Oakland, CA 94612
510 337 3900
www.teecom.com

TEECOM has undertaken considerable measures to protect the confidentiality of its proprietary information. This document contains information that is the confidential and proprietary property of TEECOM and may not be copied, published, or disclosed to others, or used for any other purpose than review by consent, without the express written consent of an authorized officer of TEECOM. This document must be kept in a file designated as "TEECOM" and kept confidential when not being reviewed as result of consent.

COPYRIGHT 1997-2013 TEECOM, ALL RIGHTS RESERVED.

## KEY PLAN

## ARCHITECT/ENGINEERS:

MEI architecture + interiors
239 9TH STREET, SUITE 201
SAN FRANCISCO, CA 94103
T (415) 682-7376 F (415) 682-7339
www.meiarchitects.com

Drawing Title: SECURITY FLOOR PLAN - LEVEL 1

Approved: Project Director

Project Title: CONSOLIDATE / EXPAND MEDICAL PROCEDURES MINOR (CEMP)

Location: VANCHCS - MATHER, CA

Date: APRIL 22, 2014 | Checked: JS | Drawn: SA

Project Number: 612-111

Building Number:

Drawing Number: TY4-1 Dwg. of

Office of Facilities Management

Department of Veterans Affairs

VA FORM 08-6231, OCT 1978

FULLY SPRINKLERED

100% CONSTRUCTION DOCUMENTS

# GENERAL NOTES

1. SERVE SECURITY DEVICES ON THIS SHEET FROM PANEL SEC 1.1 LOCATED IN THE SECOND FLOOR TELECOM ROOM 221.
2. REFER TO ARCHITECTURAL PLANS FOR EXACT LOCATION OF SECURITY DEVICES.
3. ROUTE SECURITY CABLING IN J-HANGERS, SUPPORTED EVERY 5 FEET, UNTIL CABLE TRAY.
4. FIRESTOP PATHWAYS THROUGH FIRE RATED WALLS.

| Issues & Revisions: | Date |
|---|---|
| | |

## CONSULTANTS:

REGISTERED PROFESSIONAL ENGINEER LARRY A. ANDERSON No. 17587 ELECTRICAL STATE OF CALIFORNIA

TEECOM
1333 Broadway
Suite 601
Oakland, CA 94612
510.537.3900
www.teecom.com

TEECOM has undertaken considerable measures to protect the confidentiality of its proprietary information. This document contains information that is the confidential and proprietary property of TEECOM and may not be copied, published, or disclosed to others, or used for any other purpose than review by consent, without the express written consent of an authorized officer of TEECOM. This document must be kept in a file designated as "TEECOM" and kept confidential when not being reviewed as result of consent.

COPYRIGHT 1997–2013 TEECOM, ALL RIGHTS RESERVED.

## KEY PLAN

## ARCHITECT/ENGINEERS:

MEI architecture + interiors
239 9TH STREET, SUITE 201
SAN FRANCISCO, CA 94103
T (415) 682-7376 F (415) 682-7339
www.meiarchitects.com

Drawing Title: **SECURITY FLOOR PLAN - LEVEL 2**

Approved: Project Director

Project Title: **CONSOLIDATE / EXPAND MEDICAL PROCEDURES MINOR (CEMP)**

Location: **VANCHCS - MATHER, CA**

| Date | Checked | Drawn |
|---|---|---|
| APRIL 22, 2014 | JS | SA |

Project Number: 612-111

Building Number:

Drawing Number: TY4-2 Dwg. of

**Office of Facilities Management**

Department of Veterans Affairs

VA FORM 08-6231, OCT 1978

**FULLY SPRINKLERED**

**100% CONSTRUCTION DOCUMENTS**

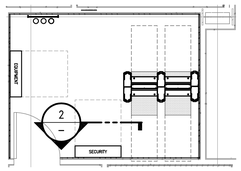


1 SECURITY PANEL – ROOM #221 PLAN

SCALE: 1/4" = 1'-0"

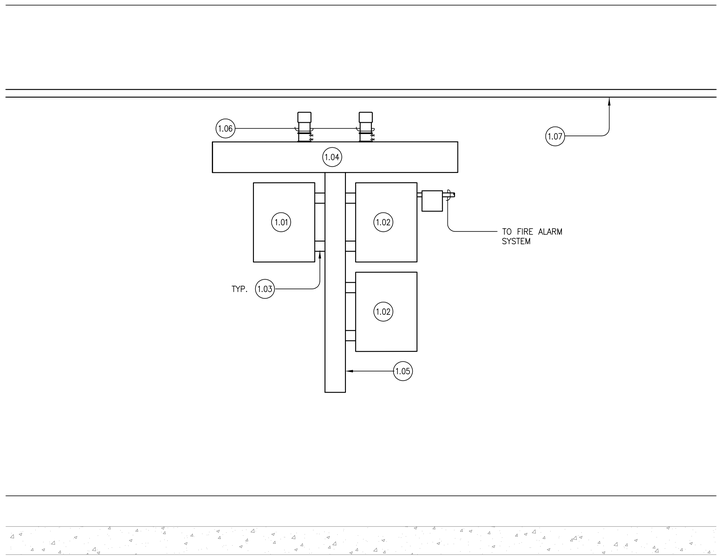


2 SECURITY EQUIPMENT ELEVATION

SCALE: 1" = 1'-0"

## GENERAL NOTES

1. SECURITY DEVICE ELEVATION ARE DIAGRAMMATIC. PROVIDE ACU'S AND POWER SUPPLIES AS REQUIRED TO HANDLE THE SECURITY FIELD EQUIPMENT SHOWN ON THE FLOOR PLANS.
2. COORDINATE INSTALLATION WITH OTHER TRADES.
3. COORDINATE SECURITY ROOM PAYOUT WITH VA COR.

## KEYNOTES

1.01 ACCESS CONTROL SYSTEM (ACU)

1.02 24VDC (LOCK POWER SUPPLY) / 12VDC DEVICE POWER SUPPLY

1.03 PROVIDE 2" CHASE NIPPLE BETWEEN SCREW COVER GUTTER WIRE RACEWAY AND SECURITY EQUIPMENT ENCLOSURE.

1.04 PROVIDE 48"x6"x6" NEMA-1 SCREW COVER GUTTER WIRE RACEWAY FOR SECURITY CABLING.

1.05 PROVIDE 60"x4"x4" NEMA-1 SCREW COVER GUTTER WIRE RACEWAY FOR SECURITY CABLING.

1.06 PROVIDE 2" CHASE CONDUITS STUBBED BELOW CABLE LADDER RACEWAY.

1.07 OVERHEAD CABLE RUNWAY PROVIDED BY OTHERS.

1.08 RACK MOUNT NVR'S, MONITOR, AND POE SWITCH IN TELECOM PROVIDED 2-POST RACK. COORDINATE EXACT LOCATION WITH RESIDENT VA ENGINEER.

| Issues & Revisions: | Date |
|---|---|
| | |

**CONSULTANTS:**

REGISTERED PROFESSIONAL ENGINEER LARRY A. ANDERSON No. 17587 ELECTRICAL STATE OF CALIFORNIA

TEECOM
1333 Broadway
Suite 401
Oakland, CA 94612
510.337.2800
www.teecom.com

TEECOM has undertaken considerable measures to protect the confidentiality of its proprietary information. This document contains information that is the confidential and proprietary property of TEECOM and may not be copied, published, or disclosed to others, or used for any other purpose than review by consent, without the express written consent of an authorized officer of TEECOM. This document must be kept in a file designated as "TEECOM" and kept confidential when not being reviewed as result of consent.

COPYRIGHT 1997-2013 TEECOM, ALL RIGHTS RESERVED.

**KEY PLAN**

**ARCHITECT/ENGINEERS:**

MEI architecture + interiors
239 9TH STREET, SUITE 201
SAN FRANCISCO, CA 94103
T (415) 682-7376 F (415) 682-7339
www.meiarchitects.com

Drawing Title: **SECURITY ROOM PLAN**

Approved: Project Director

Project Title: **CONSOLIDATE / EXPAND MEDICAL PROCEDURES MINOR (CEMP)**

Location: **VANCHCS - MATHER, CA**

Date: **APRIL 22, 2014** | Checked: **JS** | Drawn: **SA**

Project Number: **612-111**

Building Number:

Drawing Number: **TY7-1**

Dwg. of

**Office of Facilities Management**

Department of Veterans Affairs

VA FORM 08-6231, OCT 1978

**FULLY SPRINKLERED** **100% CONSTRUCTION DOCUMENTS**

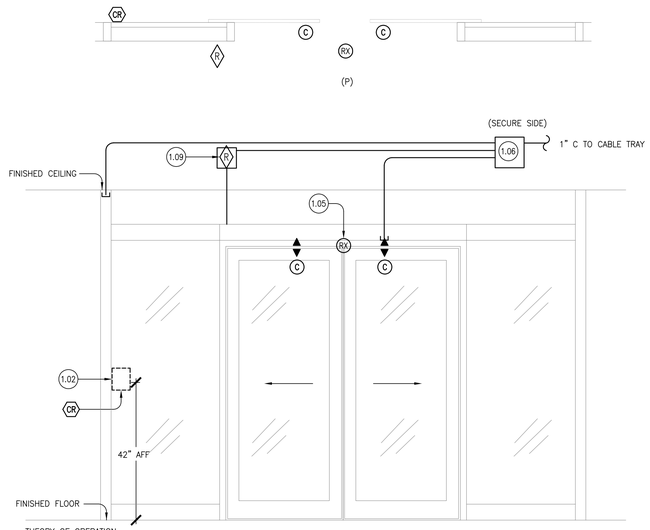


THEORY OF OPERATION:

- DOOR IS UNLOCKED DURING BUSINESS HOURS AND LOCKED AFTER HOURS.
- DOOR IS LOCKED ON THE NON-PROTECTED SIDE AND UNLOCKED ON THE PROTECTED SIDE.
- TO OPEN DOOR FROM NON-PROTECTED SIDE, CARD MUST BE PRESENTED TO UNLOCK DOOR.
- REQUEST TO EXIT MOTION DETECTOR SHUNTS DOOR CONTACT ALARM ALLOWING VALID EXIT.

1 CARD READER SLIDER W/ AUTO OPERATOR

SCALE: NTS

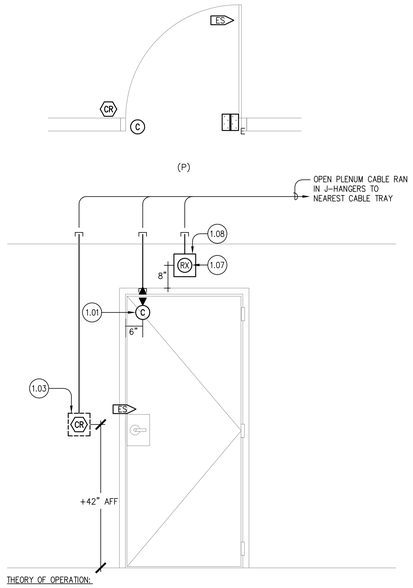


THEORY OF OPERATION:

- NORMAL DOOR STATE IS CLOSED AT ALL TIMES
- DOOR IS LOCKED ON THE NON-PROTECTED SIDE AND UNLOCKED ON THE PROTECTED SIDE.
- TO OPEN DOOR FROM NON-PROTECTED SIDE, CARD MUST BE PRESENTED TO UNLOCK DOOR.
- REQUEST TO EXIT BYPASSES ALARM ONLY ON EXIT.

2 CARD READER SINGLE (LOCKSET)

SCALE: NTS

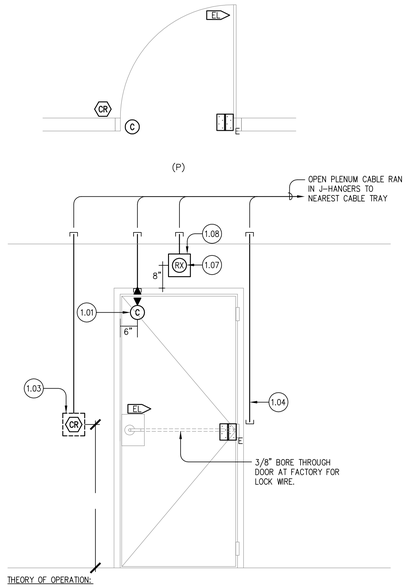


THEORY OF OPERATION:

- NORMAL DOOR STATE IS CLOSED AT ALL TIMES
- DOOR IS LOCKED ON THE NON-PROTECTED SIDE AND UNLOCKED ON THE PROTECTED SIDE.
- TO OPEN DOOR FROM NON-PROTECTED SIDE, CARD MUST BE PRESENTED TO UNLOCK DOOR.
- REQUEST TO EXIT BYPASSES ALARM ONLY ON EXIT.

3 CARD READER SINGLE (LOCKSET)

SCALE: NTS

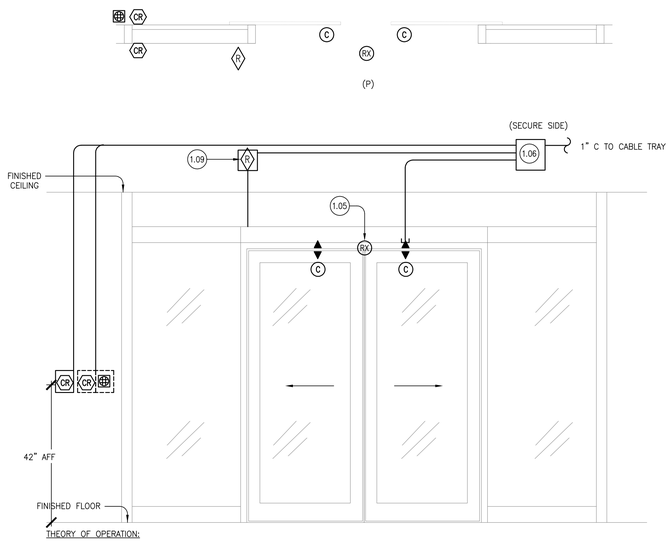


THEORY OF OPERATION:

- DOOR IS UNLOCKED DURING BUSINESS HOURS AND LOCKED AFTER HOURS.
- DOOR IS LOCKED ON THE NON-PROTECTED SIDE AND UNLOCKED ON THE PROTECTED SIDE.
- TO OPEN DOOR FROM NON-PROTECTED SIDE, CARD MUST BE PRESENTED TO UNLOCK DOOR.
- REQUEST TO EXIT MOTION DETECTOR SHUNTS DOOR CONTACT ALARM ALLOWING VALID EXIT.

4 IN/OUT CARD READER IN/OUT SLIDER W/ AUTO OPERATOR

SCALE: NTS

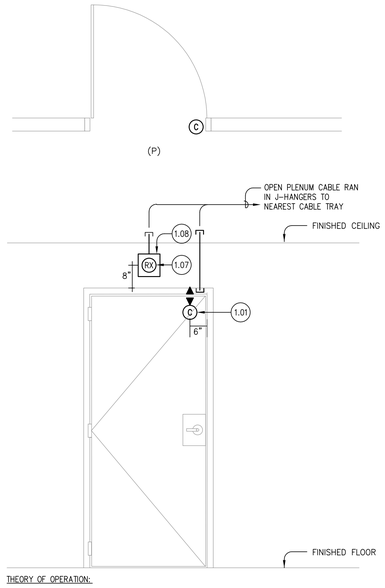


THEORY OF OPERATION:

- NORMAL DOOR STATE IS CLOSED AND LOCKED AT ALL TIMES
- DOOR IS MONITORED FOR ENTRANCE AND EXIT AT ALL TIMES.
- REQUEST TO EXIT BYPASSES ALARM ONLY ON EXIT.

6 MONITORED SINGLE DOOR

SCALE: NTS

## GENERAL NOTES

1. INSTALL 3/4" C BETWEEN JUNCTION BOXES AND DEVICES, UON.
2. VIEW OF DOORS ALWAYS FROM THE PROTECTED SIDE, UON.
3. JUNCTION BOXES ARE 4" SQ. X 2-1/8" D, UON.
4. DASHED SYMBOLS AND JUNCTION BOXES INDICATE DEVICES ON THE OPPOSITE SIDE OF THE WALL.
5. CENTER OF DEVICE JUNCTION BOXES ARE MOUNTED 6" AWAY FROM THE LATCH SIDE OF THE DOOR.
6. DOOR CONTACTS MOUNTED 6" AWAY FROM THE LATCH SIDE OF THE DOOR, UON.
7. FLUSH MOUNT JUNCTION BOXES INSTALLED BELOW THE CEILING LINE.
8. CONCEAL CONDUIT MOUNTED BELOW THE CEILING LINE IN THE WALLS.
9. CONDUIT AND JUNCTION BOXES ARE NEW, UON.
10. REQUEST TO EXIT DEVICES PROVIDED AS PART OF LOCKING HARDWARE, UON.
11. SECURITY CONTRACTOR RESPONSIBLE FOR TERMINATING CABLE TO TRANSFER HINGE AS WELL AS LOCK BODY AND REQUEST TO EXIT SWITCH, UON. COORDINATE WITH HARDWARE SUPPLIER AS LOCKS INSTALLED.
12. DOORS AND FRAMES MUST BE FACTORY FABRICATED FOR SECURITY DEVICES INCLUDING LOCK WIRE PATHWAY, 1" DOOR CONTACTS, AND ACCESS HOLE BEHIND ELECTRIC TRANSFER HINGE. COORDINATE LOCATIONS AND SIZES WITH DEVICE MANUFACTURERS INSTALLATION TEMPLATES.
13. LOCATE ALL JUNCTION BOXES AND LOCAL POWER SUPPLIES ABOVE ACCESSIBLE CEILING GRID ON SECURE SIDE OF PROTED DOOR.
14. ROUTE ALL CONDUITS STUB-UPS INTO ACCESSIBLE CEILING SPACE ON PROTECTED SIDE OF DOOR.

## KEYNOTES

1.01 PROVIDE RECESSED MOUNTED 1" DIAMETER DOUBLE POLE DOUBLE THROW MAGNETIC CONTACTS. U.O.N.

1.02 SURFACE MOUNT CARD READER TO MULLION AT 42" A.F.F.

1.03 PROVIDE A 1-GANG DEVICE RING FOR THE 4" SQ BOX. MOUNT AS CLOSE TO DOOR AS POSSIBLE.

1.04 STUB PATHWAY ABOVE CENTER HINGE FOR FISHING WIRE TO ELECTRIC THROUGH WIRE HINGE.

1.05 MOUNT REQUEST-TO-EXIT DEVICE TO THE UNDERSIDE OF THE AUTOMATIC DOOR OPERATOR. FIELD DETERMINE EXACT LOCATION.

1.06 10"x10"x4" DOOR JUNCTION BOX FOR SECURITY CABLING

1.07 REQUEST-TO-EXIT MOTION DETECTOR MOUNTED ON PROTECTED SIDE OF DOOR.

1.08 PROVIDE A 1-GANG DEVICE RING FOR THE 4" SQ BOX MOUNTED HORIZONTALLY.

1.09 PROVIDE RELAY TO INTERFACE FOR CONNECTION TO DOOR OPERATOR.

| Issues & Revisions: | Date |
|---|---|
| | |

**CONSULTANTS:**

REGISTERED PROFESSIONAL ENGINEER LARRY A. ANDERSON No. 17587 ELECTRICAL STATE OF CALIFORNIA

TEECOM

1333 Broadway
Suite 601
Oakland, CA 94612
510 337 2800
www.teecom.com

TEECOM has undertaken considerable measures to protect the confidentiality of its proprietary information. This document contains information that is the confidential and proprietary property of TEECOM and may not be copied, published, or disclosed to others, or used for any other purpose than review by consent, without the express written consent of an authorized officer of TEECOM. This document must be kept in a file designated as "TEECOM" and kept confidential when not being reviewed as result of consent.

COPYRIGHT 1997-2013 TEECOM, ALL RIGHTS RESERVED.

**KEY PLAN**

**ARCHITECT/ENGINEERS:**

MEI architecture + interiors

239 9TH STREET, SUITE 201
SAN FRANCISCO, CA 94103
T (415) 682-7376 F (415) 682-7339
www.meiarchitects.com

Drawing Title: **SECURITY DETAILS - DOORS**

Approved: Project Director

Project Title: **CONSOLIDATE / EXPAND MEDICAL PROCEDURES MINOR (CEMP)**

Location: **VANCHCS - MATHER, CA**

Date: **APRIL 22, 2014** | Checked: **JS** | Drawn: **SA**

Project Number: **612-111**

Building Number:

Drawing Number: **TY9-1**

Dwg. of

**Office of Facilities Management**

Department of Veterans Affairs

VA FORM 08-6231, OCT 1978

**FULLY SPRINKLERED**

**100% CONSTRUCTION DOCUMENTS**

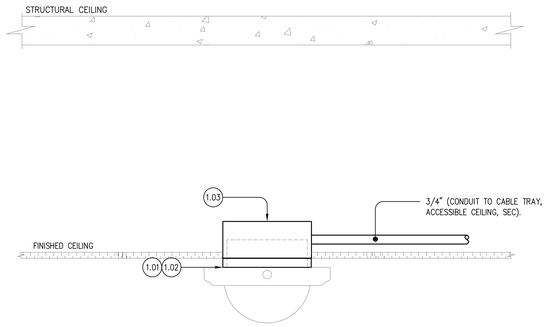


1 INTERIOR CEILING MOUNT (FIXED DOME)

SCALE: NTS

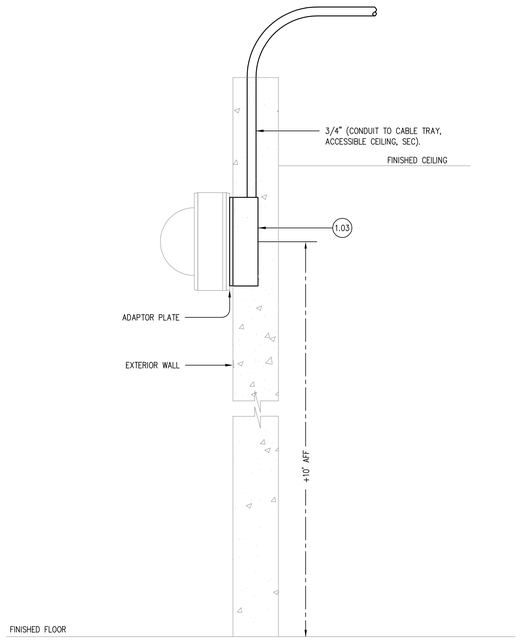


2 EXTERIOR WALL MOUNT (FIXED DOME)

SCALE: NTS

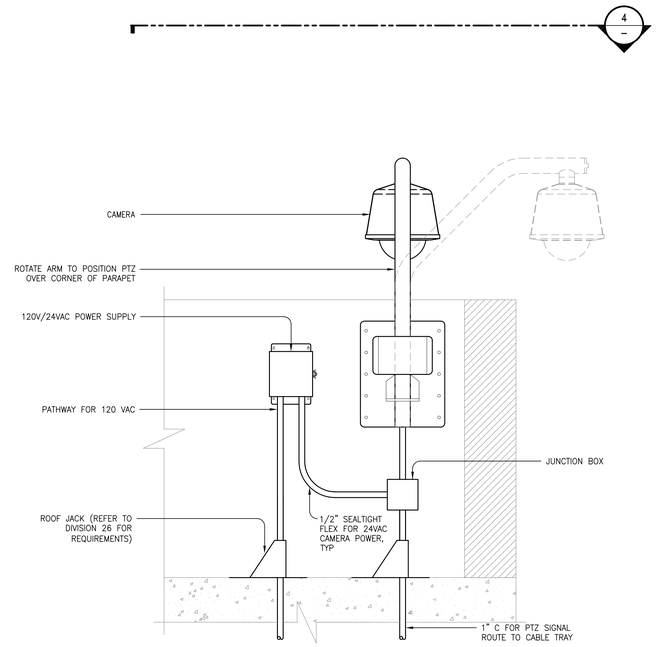


3 EXTERIORPARAPET WALL MOUNT

SCALE: NTS

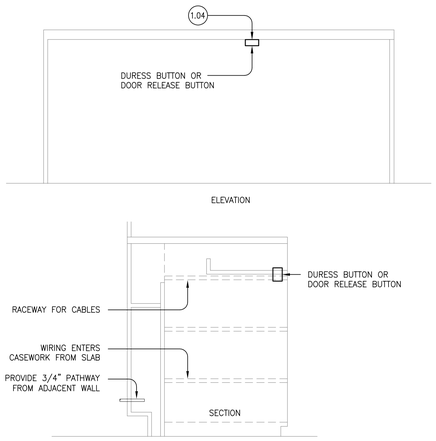


5 DURESS BUTTON OR DOOR RELEASE BUTTONS – DESK MOUNT

SCALE: NTS

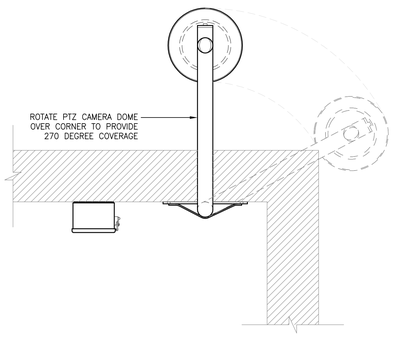


4 EXTERIOR WALL MOUNT (PTZ DOME)

SCALE: NTS

## GENERAL NOTES

1. INSTALL 1" C BETWEEN JUNCTION BOXES AND DEVICES, UON.
2. JUNCTION BOXES ARE 4" SQ. X 2-1/8" D, UON.
3. DASHED SYMBOLS AND JUNCTION BOXES INDICATE DEVICES ON THE OPPOSITE SIDE OF THE WALL.
4. FLUSH MOUNT JUNCTION BOXES INSTALLED BELOW THE CEILING LINE.
5. CONCEAL CONDUIT MOUNTED BELOW THE CEILING LINE IN THE WALLS.
6. CONDUIT AND JUNCTION BOXES ARE NEW, UON.
7. ROUTE ALL CONDUITS STUB-UPS INTO ACCESSIBLE CEILING SPACE ON PROTECTED SIDE OF DOOR.

## KEYNOTES

1.01 PROVIDE MOUNTING BRACKET, ANCHOR TO MANUFACTURER'S SPECIFICATIONS.

1.02 SECURITY CONTRACTOR TO PROVIDE MANUFACTURER'S ELECTRICAL BOX ADAPTER PLATE FOR SECURITY CAMERA.

1.03 PROVIDE 4" SQ J-BOX.

1.04 FIELD DETERMINE EXACT LOCATION OF DURESS BUTTON OR DOOR RELEASE BUTTON WITH VA COR PRIOR TO INSTALLATION.

| Issues & Revisions: | Date |
|---|---|
| | |

**CONSULTANTS:**

REGISTERED PROFESSIONAL ENGINEER LARRY A. ANDERSON No. 17587 ELECTRICAL STATE OF CALIFORNIA

TEECOM
1333 Broadway
Suite 601
Oakland, CA 94612
510 337 2800
www.teecom.com

TEECOM has undertaken considerable measures to protect the confidentiality of its proprietary information. This document contains information that is the confidential and proprietary property of TEECOM and may not be copied, published, or disclosed to others, or used for any other purpose than review by consent, without the express written consent of an authorized officer of TEECOM. This document must be kept in a file designated as "TEECOM" and kept confidential when not being reviewed as result of consent.

COPYRIGHT 1997-2013 TEECOM, ALL RIGHTS RESERVED.

**KEY PLAN**

**ARCHITECT/ENGINEERS:**

IMEI architecture + interiors
239 9TH STREET, SUITE 201
SAN FRANCISCO, CA 94103
T (415) 682-7376 F (415) 682-7339
www.meiarchitects.com

Drawing Title: **SECURITY DETAILS - CAMERAS**

Approved: Project Director

Project Title: **CONSOLIDATE / EXPAND MEDICAL PROCEDURES MINOR (CEMP)**

Location: **VANCHCS - MATHER, CA**

Date: **APRIL 22, 2014** | Checked: **JS** | Drawn: **SA**

Project Number: **612-111**

Building Number:

Drawing Number: **TY9-2**

Dwg. of

**Office of Facilities Management**

Department of Veterans Affairs

VA FORM 08-6231, OCT 1978

**FULLY SPRINKLERED** **100% CONSTRUCTION DOCUMENTS**