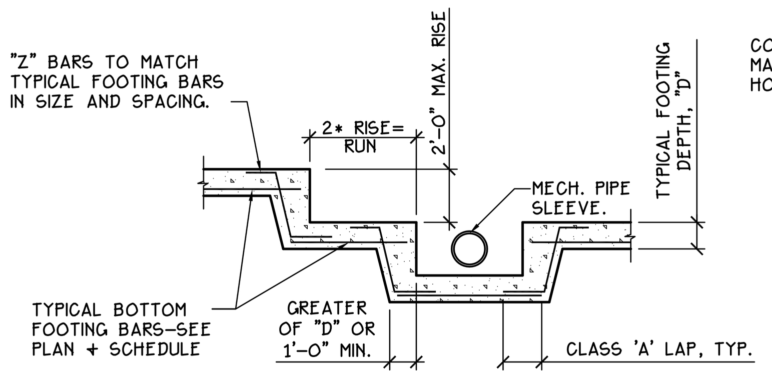

NOTES:
1. TYP. STEP FOOTING AS INDICATED IN PLAN AND AS REQ'D TO PASS UNDER MECH. PIPES. COORD. LOCATION w/ CIVIL + M/E/P DWGS.
2. TRANSVERSE BARS NOT SHOWN FOR CLARITY.
3. TOP BARS ARE NOT SHOWN. WHERE TOP BARS OCCUR, PROVIDE "Z" TOP BARS AT STEP IN ADDITION TO THAT SHOWN.

DETAIL 1/S401 N.T.S.
TYPICAL STEP FOOTING DETAIL

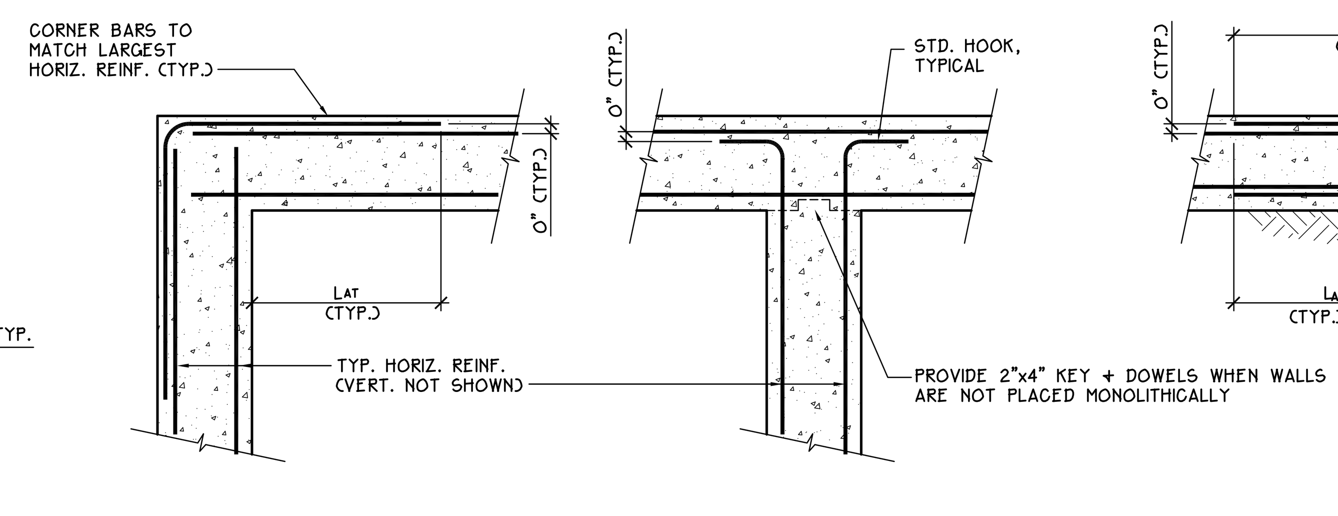

OUTSIDE CORNER | INTERSECTION | INSIDE CORNER

NOTE: PROVIDE LAPS PER TENSION LAP SPLICE SCHEDULE THIS SHEET.

DETAIL 2/S401 3/4" = 1'-0"
TYPICAL CONCRETE WALL BAR BENDING

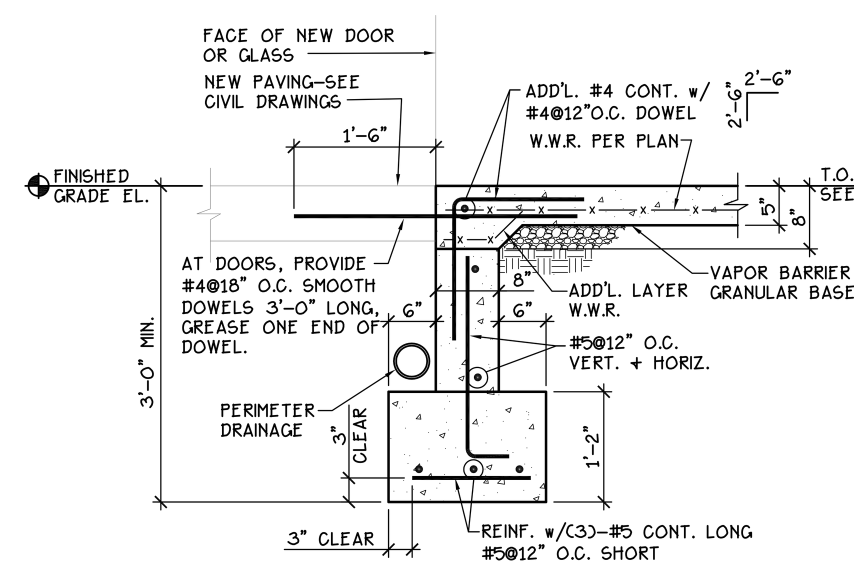

DETAIL 3/S401 N.T.S.
NEW VESTIBULE ENTRY AND STOREFRONT SLAB EDGE DETAIL

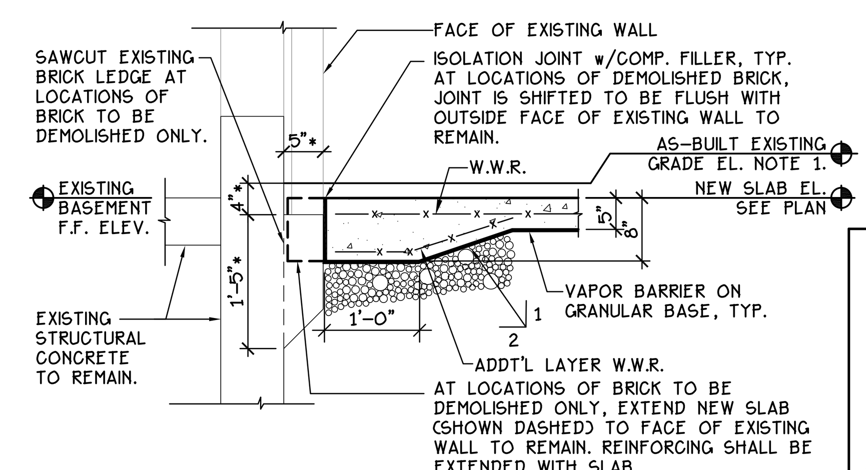

NOTES:
1. AS–BUILT EXISTING GRADE ELEVATION FROM ORIGINAL CONSTRUCTION VARIES FROM CURRENT EXISTING GRADE ELEVATIONS. SEE CIVIL DRAWINGS FOR SURVEYED EXISTING GRADE ELEAVTIONS AT NEW WORK AREAS, CONTRACTOR FIELD VERIFY.
2. "*" INDICATES DIMENSION TO BE FIELD VERIFIED BY CONTRACTOR PRIOR TO WORK.

DETAIL 4/S401 N.T.S.
TYPICAL CANOPY NEW SLAB ON GRADE AND EXISTING BUILDING INTERFACE DETAIL

TENSION LAP SPLICE & TENSION DEVELOPMENT LENGTH SCHEDULE
Fy = 60 KSI (ACI 318–11)

	BAR SIZE	VERTICAL + BOTTOM BARS L_D	L_A	L_B	TOP BARS * L_{DT}	L_{AT}	L_{BT}
f'c = 4,000 PSI	3	22	22	28	28	28	36
	4	29	29	37	37	37	48
	5	36	36	47	47	47	60
	6	43	43	56	56	56	72
	7	63	63	81	81	81	106
	8	71	71	93	93	93	121
	9	81	81	105	105	105	136
	10	91	91	118	118	118	153
	11	101	101	131	131	131	170
	14	121	--	--	157	--	--
	18	161	--	--	209	--	--

* HORIZONTAL BARS WITH MORE THAN 12" OF CONC. BELOW

NOTES:
1. ALL LAP SPLICES SHALL BE L_B OR L_{BT} , U.N.O.
2. L_D , L_{DT} = STRAIGHT TENSION DEV. LENGTH IN INCHES.
   L_A , L_{AT} = CLASS A TENSION LAP SPLICE LENGTH IN INCHES.
   L_B , L_{BT} = CLASS B TENSION LAP SPLICE LENGTH IN INCHES.
3. SPLICE AND DEVELOPMENT LENGTHS INDICATED ARE FOR WORST CASE SITUATIONS, WITH NO LIMITS ON COVER OR BAR SPACING.
4. CONTRACTOR MAY REDUCE SCHEDULED LENGTHS IN ACCORDANCE WITH CH. 12 OF ACI 318 CODE TO ACCOUNT FOR ACTUAL BAR SPACING, AMOUNT OF COVER, AND ENCLOSING TRANSVERSE REINFORCEMENT. THE SHOP DRAWINGS SHALL CLEARLY SHOW ALL SPLICE AND DEVELOPMENT LENGTHS WHICH DIFFER FROM THIS SCHED.
5. INCREASE LENGTHS 30% FOR LIGHTWEIGHT CONCRETE.
6. INCREASE LENGTHS 50% FOR EPOXY COATED REINF., EXCEPT FOR TOP BARS, INCREASE 30%.
7. LAP LENGTH SHALL BE BASED ON THE LARGER BAR DIAMETER BEING LAPPED.
8. IF THE REQ'D f'c IS NOT INCLUDED IN THE ABOVE SCHEDULE, USE THE NEXT LOWEST f'c TO DETERMINE BAR DEVELOPMENT LENGTH.

FOOTING SCHEDULE

MARK	SIZE	DEPTH	REINFORCING
F2836	2'-8"x3'-6"	14"	4–#5 BOTTOM ONLY E.W.
F3R	SEE PLAN	15"	4–#5 BOTTOM ONLY E.W.
F311R	SEE PLAN	15"	5–#5 BOTTOM ONLY E.W. PERPENDICULAR AND PARALLEL TO COLUMN
F36	3'-6"x3'-6"	18"	4–#6 TOP AND BOTTOM E.W.
F40	4'-0"x4'-0"	15"	4–#6 TOP AND BOTTOM E.W.

FOOTING SCHEDULE NOTES:
1. WHERE COLUMN FOOTING IS WITHIN A NEW PERIMETER WALL, WALL FOOTING REINFORCING SHALL BE CONTINUOUS THROUGH COLUMN FOOTING.

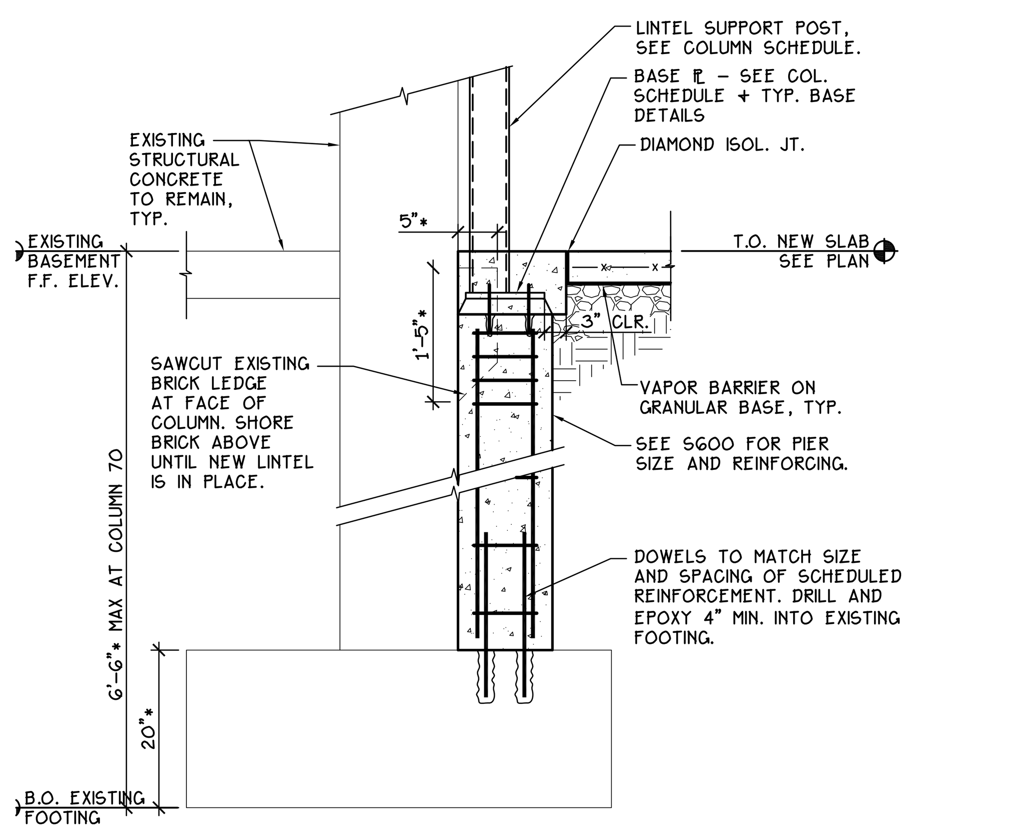

NOTES:
1. "*" INDICATES DIMENSION TO BE FIELD VERIFIED BY CONTRACTOR PRIOR TO WORK.

DETAIL 5/S401 N.T.S.
LINTEL PIER SECTION @ EXISTING COLUMN 70

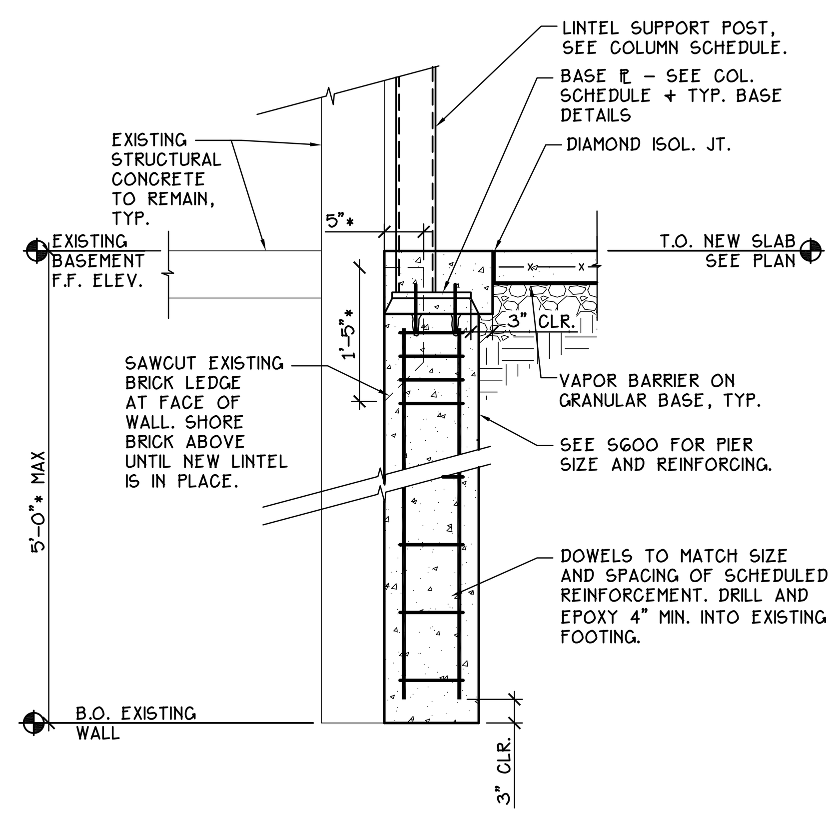

NOTES:
1. "*" INDICATES DIMENSION TO BE FIELD VERIFIED BY CONTRACTOR PRIOR TO WORK.
2. MINIMUM BEARING PRESSURE OF 2000 PSF SHALL BE FIELD VERIFIED AT THIS LOCATION PRIOR TO PLACING PIER CONCRETE.

DETAIL 6/S401 N.T.S.
LINTEL PIER SECTION @ EXISTING WALL

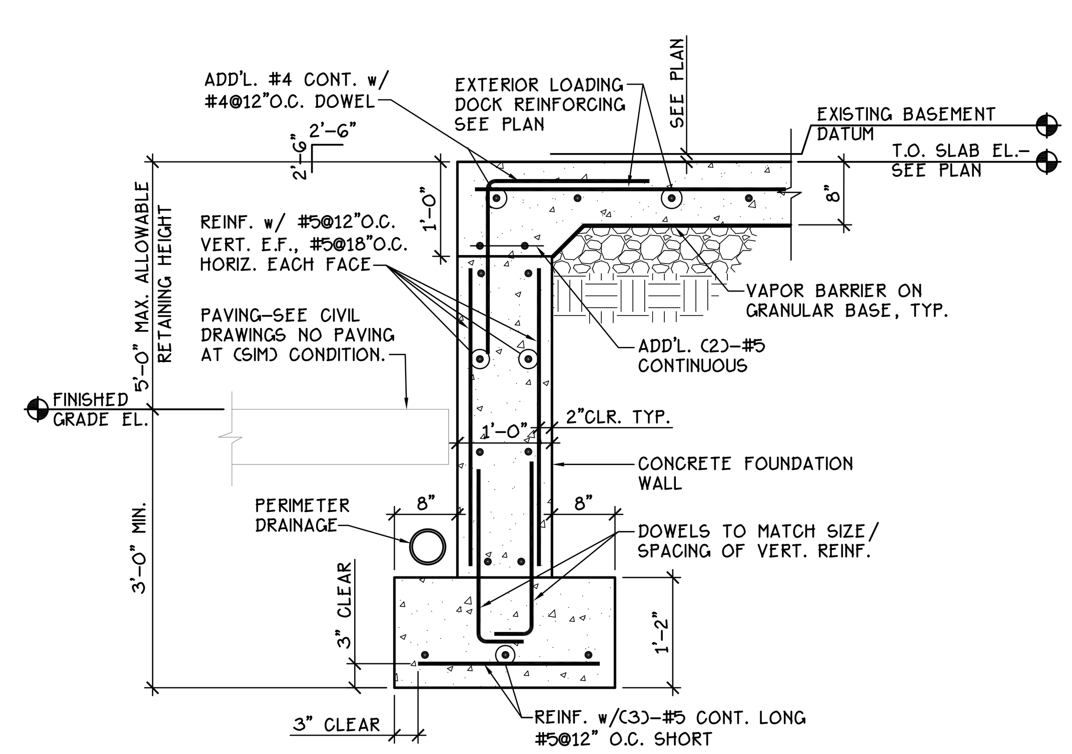

NOTES:
1. WALL HAS BEEN DESIGNED AS A BASEMENT WALL THAT IS BRACED AT THE TOP. OUTSIDE OF WALL SHALL BE BRACED DURING CONSTRUCTION DURING BACKFILL OPERATIONS UNTIL NEW SLAB REACHES DESIGN F'c.

DETAIL 7/S401 N.T.S.
TYPICAL LOADING DOCK FOUNDATION SECTION

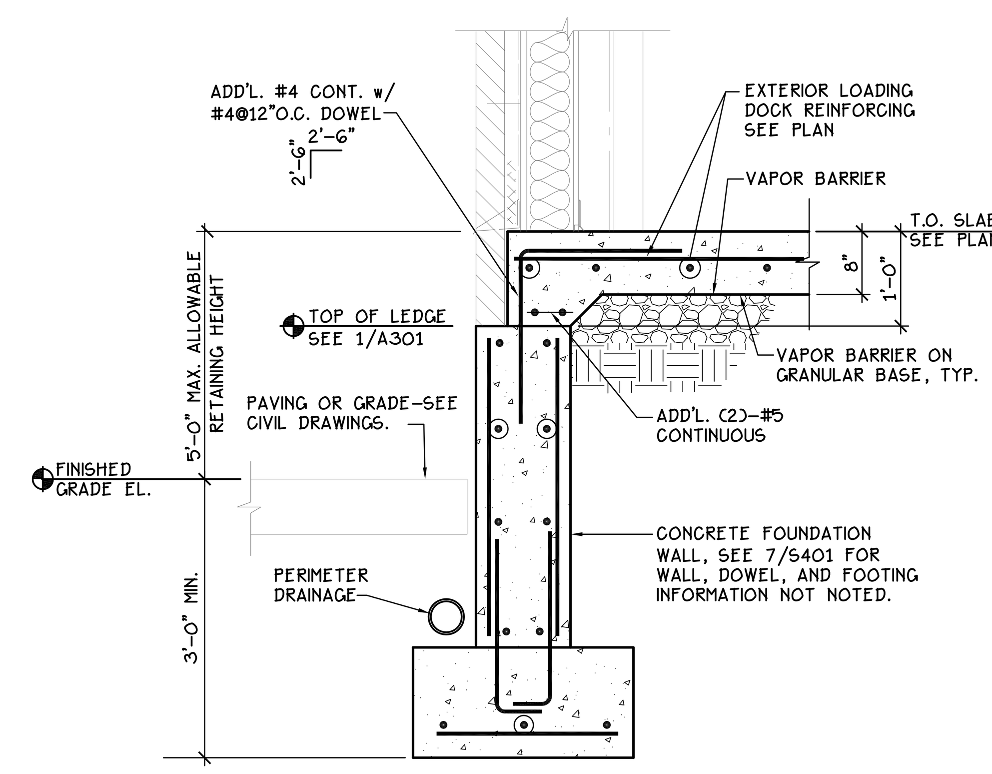

NOTES:
1. WALL HAS BEEN DESIGNED AS A BASEMENT WALL THAT IS BRACED AT THE TOP. OUTSIDE OF WALL SHALL BE BRACED DURING CONSTRUCTION DURING BACKFILL OPERATIONS UNTIL NEW SLAB REACHES DESIGN F'c.

DETAIL 8/S401 N.T.S.
FOUNDATION WALL AT BRICK LEDGE

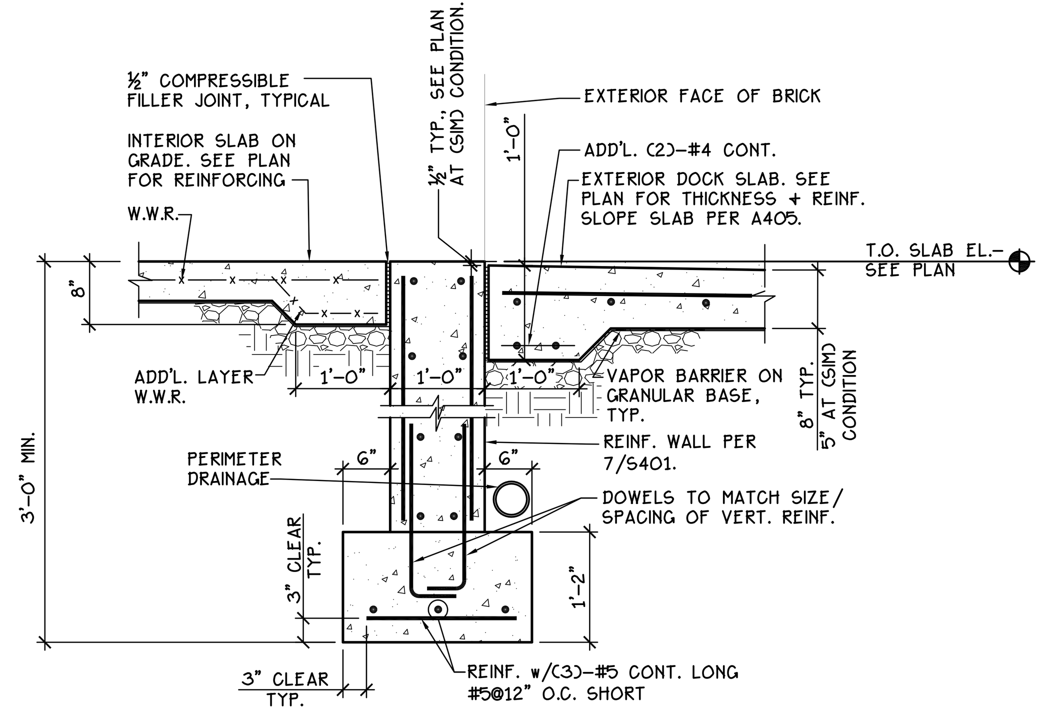

NOTES:
1. AT (SIM) CONDITION, "EXTERIOR DOCK SLAB" SLAB IS TYPICAL 5" INTERIOR SLAB. PROVIDE THICKENED SLAB AT FACE OF BRICK WITH ADDT'L LAYER WWR IN LIEU OF 2–#4 SHOWN.
2. AT (SIM) CONDITION, SLABS IN SECTION DO NOT SLOPE, SEE PLAN FOR ELEVATIONS EACH SIDE OF WALL.

DETAIL 9/S401 N.T.S.
EXTERIOR BRICK AT LOADING DOCK

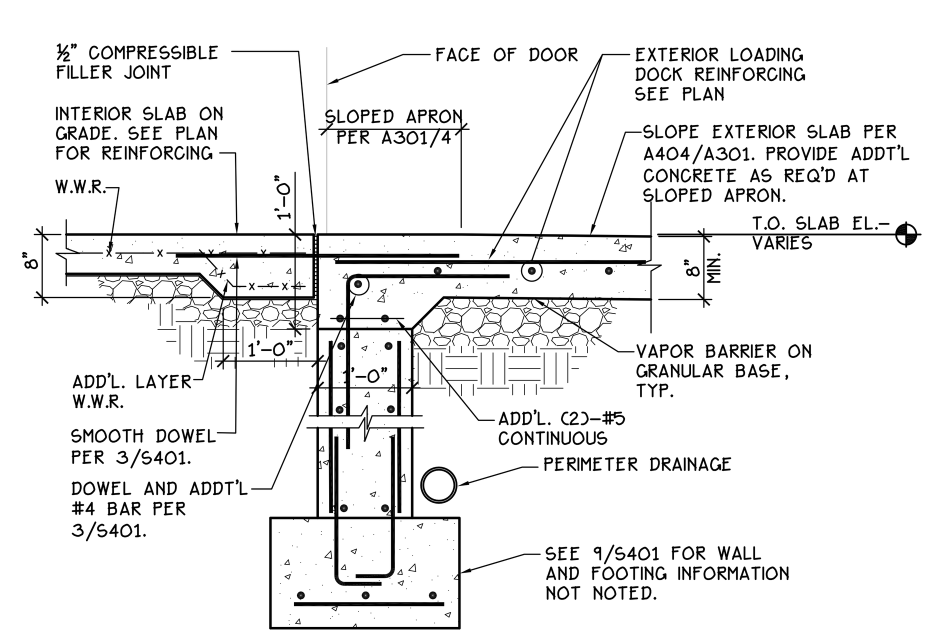

DETAIL 10/S401 N.T.S.
SLOPED APRON AT EXTERIOR DOOR

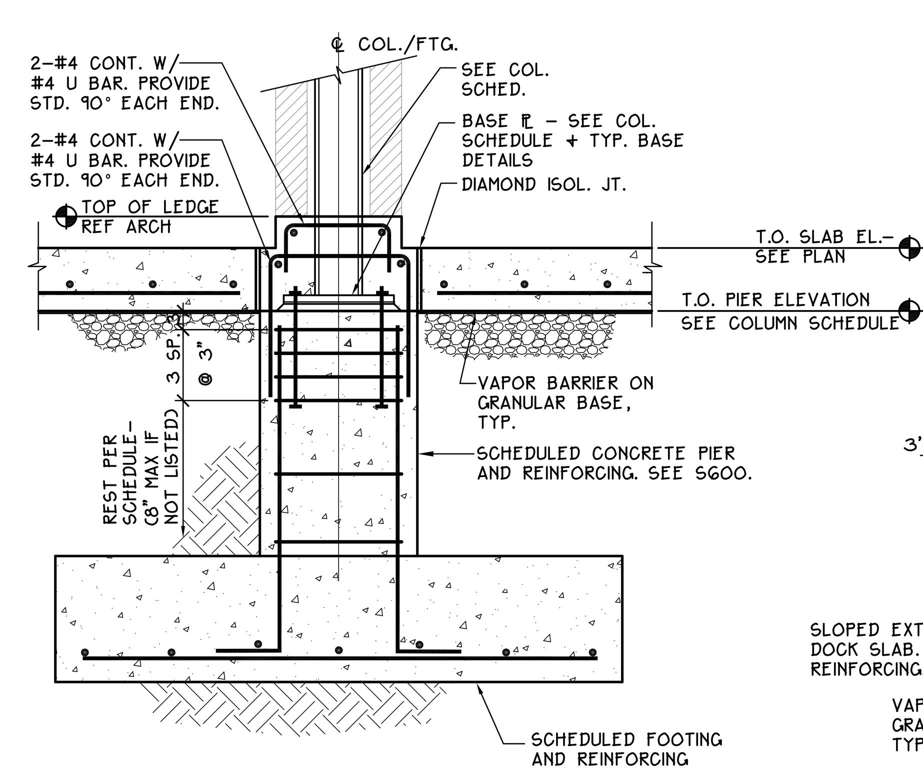

DETAIL 11/S401 N.T.S.
BRICK ENCASED COLUMN AT LOADING DOCK

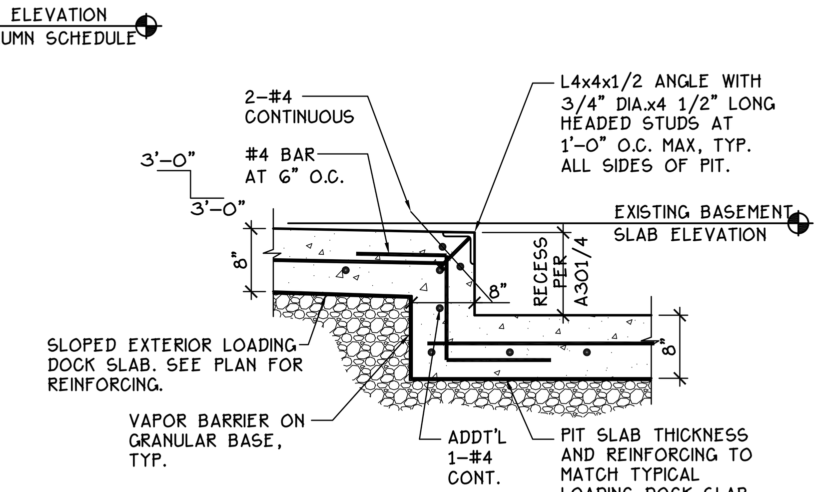

DETAIL 12/S401 N.T.S.
DOCK LIFT PIT DETAIL

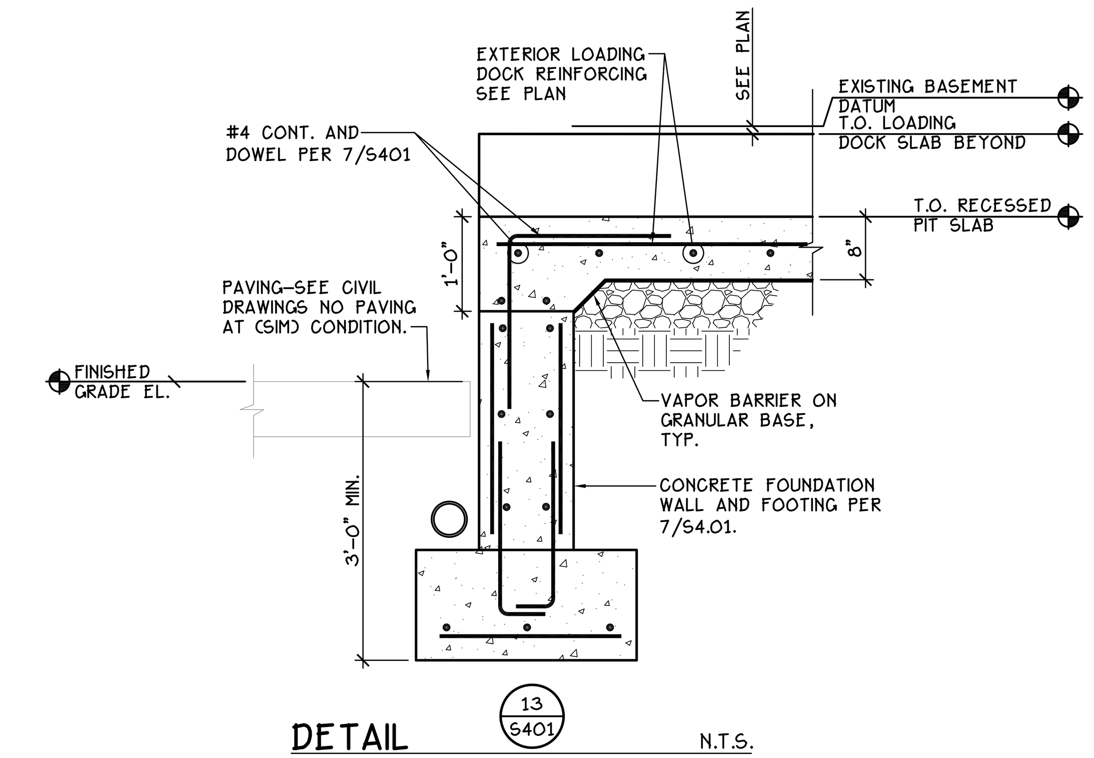

DETAIL 13/S401 N.T.S.
TYPICAL DOCK LIFT SILL DETAIL

FULLY SPRINKLERED
BID DOCUMENTS

Revisions:	Date

CONSULTANTS:

HOPE FURRER Associates, Inc.
Structural Design and Consulting for Architectural Projects
501 Fairmount Avenue . Towson, MD 21286
700 East Beaver Avenue . State College, PA 16801
t. 410.583.4874 . www.hfurrer.com

COMMONWEALTH OF PENNSYLVANIA REGISTERED PROFESSIONAL ENGINEER HOPE FURRER PE-037677-R

ARCHITECTS/ENGINEERS:
A|E works
6587 HAMILTON AVENUE
PITTSBURGH, PA 15206
PH: 412.287.7333 FAX: 412.287.7334
www.ae-works.com

Drawing Title: STRUCTURAL FOUNDATION DETAILS
Approved: Project Director
Project Title: BUILDING 9 - SECOND FLOOR RENOVATION
Location: 1400 Blackhorse Hill Road Coatesville, PA 19320
Date: 05 / 12 / 14 | Checked: SLS | Drawn: MTH
Project Number: 542-13-105
Building Number: 9
Drawing Number: S401
Dwg. 28 of 125

Office of Construction and Facilities Management
Department of Veterans Affairs

VA FORM 08-6231