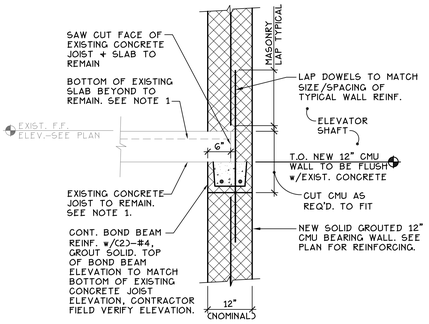

NOTE:
1. SHORE EXISTING CONCRETE TO REMAIN PRIOR TO SAW CUTTING ENDS. SHORING SHALL REMAIN IN PLACE UNTIL NEW CMU/GROUT/MORTAR HAS REACHED DESIGN STRENGTH.

DETAIL 1/S503 3/4"=1'-0"
NEW ELEVATOR WALL-EXISTING CONCRETE JOIST BEARING

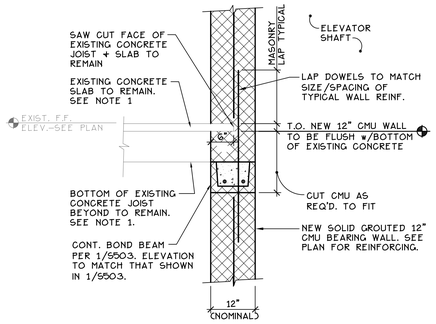

NOTE:
1. SHORE EXISTING CONCRETE TO REMAIN PRIOR TO SAW CUTTING ENDS. SHORING SHALL REMAIN IN PLACE UNTIL NEW CMU/GROUT/MORTAR HAS REACHED DESIGN STRENGTH.

DETAIL 2/S503 3/4"=1'-0"
NEW ELEVATOR WALL-EXISTING SLAB BEARING

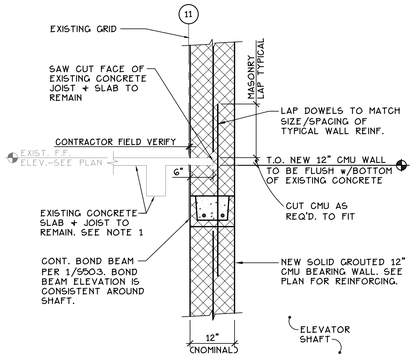

NOTE:
1. SHORE EXISTING CONCRETE TO REMAIN PRIOR TO SAW CUTTING ENDS. SHORING SHALL REMAIN IN PLACE UNTIL NEW CMU/GROUT/MORTAR HAS REACHED DESIGN STRENGTH.

DETAIL 3/S503 3/4"=1'-0"

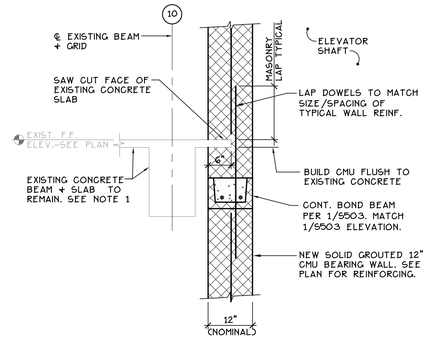

NOTE:
1. SHORE EXISTING CONCRETE TO REMAIN PRIOR TO SAW CUTTING ENDS. SHORING SHALL REMAIN IN PLACE UNTIL NEW CMU/GROUT/MORTAR HAS REACHED DESIGN STRENGTH.

DETAIL 4/S503 3/4"=1'-0"

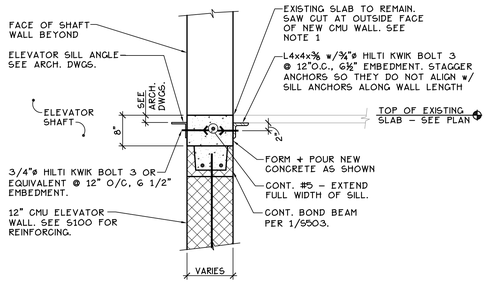

NOTE:
1. SHORE EXISTING CONCRETE TO REMAIN PRIOR TO SAW CUTTING ENDS. SHORING SHALL REMAIN IN PLACE UNTIL NEW CMU/GROUT/MORTAR HAS REACHED DESIGN STRENGTH.

DETAIL 5/S503 3/4" = 1'-0"
TYPICAL ELEVATOR SILL ANGLE CAT ELEVATOR DOOR) SUPPORTED ON MASONRY

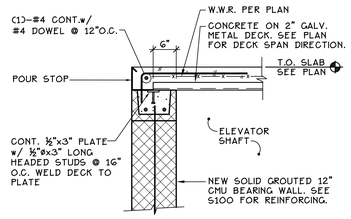

DETAIL 6/S503 3/4"=1'-0"
ELEVATOR ROOF EDGE DETAIL

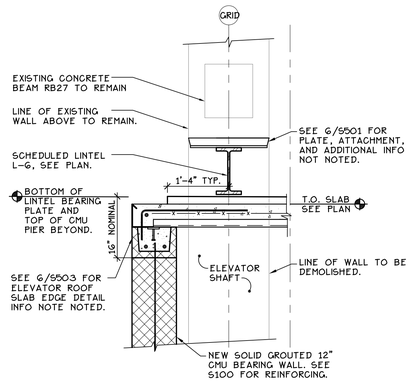

NOTE:
1. NEW L-G LINTEL IS SUPPORTED ON NEW CMU BEARING WALL. EITHER INSTALL BOTH PRIOR TO WALL DEMOLITION, OR SHORE AS REQUIRED UNTIL BOTH ARE IN PLACE.
2. REINFORCE CMU PIER PER 1/S501.

DETAIL 7/S503 3/4"=1'-0"
ELEVATOR ROOF EDGE AT LINTEL L-G

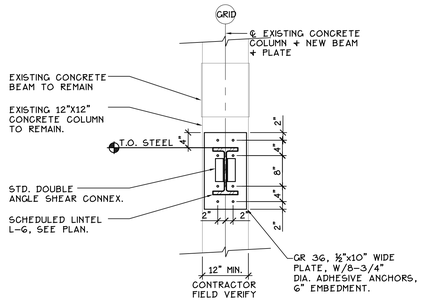

DETAIL 8/S503 3/4"=1'-0"
LINTEL L-G TO EXISTING COLUMN ATTACHMENT

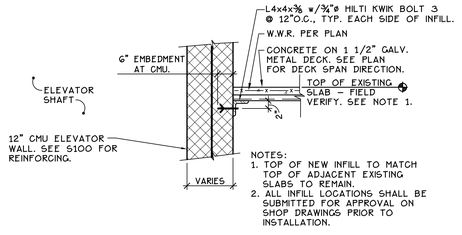

NOTES:
1. TOP OF NEW INFILL TO MATCH TOP OF ADJACENT EXISTING SLABS TO REMAIN.
2. ALL INFILL LOCATIONS SHALL BE SUBMITTED FOR APPROVAL ON SHOP DRAWINGS PRIOR TO INSTALLATION.

DETAIL 9/S503 3/4" = 1'-0"
INFILL AT NEW MASONRY WALL

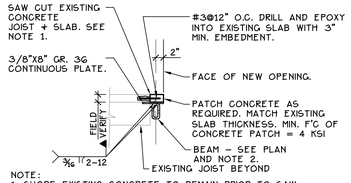

NOTE:
1. SHORE EXISTING CONCRETE TO REMAIN PRIOR TO SAW CUTTING ENDS. SHORING SHALL REMAIN IN PLACE UNTIL STEEL IS IN PLACE AND NEW CONCRETE HAS REACHED DESIGN STRENGTH.
2. BEAM CONNECTION AT END SHALL BE DESIGNED FOR A MINIMUM UNFACTORED LOAD OF 1 KIP DEAD LOAD AND 1 KIP LIVE LOAD.

DETAIL 10/S503 3/4" = 1'-0"
STEEL AT NEW MECHANICAL OPENING

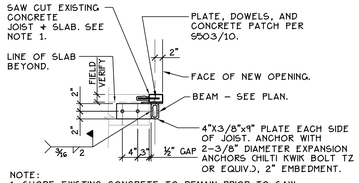

NOTE:
1. SHORE EXISTING CONCRETE TO REMAIN PRIOR TO SAW CUTTING ENDS. SHORING SHALL REMAIN IN PLACE UNTIL STEEL IS IN PLACE AND NEW CONCRETE HAS REACHED DESIGN STRENGTH.

DETAIL 11/S503 3/4" = 1'-0"
EXISTING JOIST TO STEEL CONNTECTION AT NEW MECHANICAL OPENING

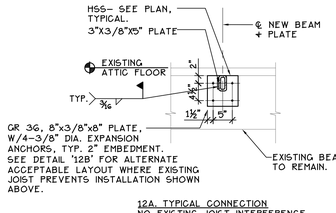

12A. TYPICAL CONNECTION
NO EXISTING JOIST INTERFERENCE

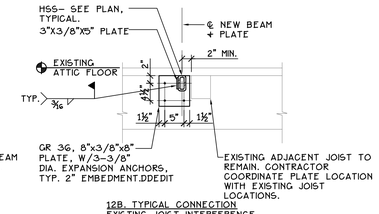

12B. TYPICAL CONNECTION
EXISTING JOIST INTERFERENCE

NOTES:
1. CONTRACTOR SHALL FIELD VERIFY EXISTING CONCRETE BEAM DIMENSIONS AND REINFORCING BY NON DESTRUCTIVE TESTING METHODS PRIOR TO SUBMISSION OF SHOP DRAWINGS.
2. DO NOT CUT THROUGH OR DAMAGE EXISTING CONCRETE REINFORCING. IN THE EVENT RESULTS OF NOTE 1 TESTING INDICATE POSSIBLE CONFLICT WITH NEW ANCHORS, CONTRACTOR SHALL SUBMIT PROPOSED NEW ANCHOR LOCATIONS FOR REVIEW.

DETAIL 12/S503 3/4"=1'-0"
NEW STEEL BEAM TO EXISTING BEAM CONNECTION AT NEW OPENING

FULLY SPRINKLERED
BID DOCUMENTS

Revisions:	Date

CONSULTANTS:

HOPE FURRER Associates, Inc.
Structural Design and Consulting for Architectural Projects
501 Eastonwest Avenue : Towson, MD 21286
700 East Baltimore Avenue : Stone College, PA 16803
t. 410.583.4854 : www.hfaassoc.com

REGISTERED PROFESSIONAL ENGINEER
MICHAEL T. HUFFER
PE-037677-R
COMMONWEALTH OF PENNSYLVANIA

ARCHITECTS/ENGINEERS:

A|E works
6587 HAMILTON AVENUE
PITTSBURGH, PA 15206
PH: 412.287.7333 FAX: 412.287.7334
www.ae-works.com

Drawing Title
SUPERSTRUCTURE SECTIONS

Approved: Project Director

Project Title
BUILDING 9 -
SECOND FLOOR RENOVATION

Location: 1400 Blackhorse Hill Road
Coatesville, PA 19320

Date	Checked	Drawn
05 / 12 / 14	SLS	MTH

Project Number 542-13-105
Building Number 9
Drawing Number S503
Dwg. 33 **of** 125

Office of Construction and Facilities Management
Department of Veterans Affairs

VA FORM 08-6231