LEGEND

- UNDISTURBED SOIL OR FILL OR BACKFILL
- CONCRETE (CAST IN PLACE)
- PRECAST CONCRETE
- EXISTING STRUCTURE
- STEEL
- CMU WALL (PLAN)
- CMU WALL (SECTION)
- CHANGE IN ELEVATION
- EXISTING STRUCTURE INTERFACE
- KEYED NOTES ON EACH DWG
- DENOTES MOMENT CONNECTION TO INTERSECTING BEAM OR COLUMN
- BEAM SPLICE CONNECTION
- SLIDING CONNECTION FROM BEAM TO INTERSECTING BEAM OR COLUMN

ABBREVIATIONS

&	AND
@	AT
< >	DIMENSION MUST BE VERIFIED PRIOR TO FABRICATION OR CONSTRUCTION
*	DIMENSION TO BE FURNISHED LATER OR SEE NOTE THIS SECTION OR SCHEDULE
ADDL	ADDITIONAL
AB	ANCHOR BOLT
ARCH	ARCHITECTURAL
B	BOTTOM OR BOTTOM MOST
B2	BOTTOM SECOND (SECOND LAYER FROM BOTTOM)
BBM	BOND BEAM
BM	BEAM
BMS	BEAMS
BRG	BEARING
BOT	BOTTOM
BLDG	BUILDING
C	CHANNEL
CC	CENTER TO CENTER
CJ	CONTROL JOINT
CJNT	CONSTRUCTION JOINT
COL	COLUMN
CONC	CONCRETE
CONN	CONNECTION
CONST	CONSTRUCTION
CONT	CONTINUOUS
CONTR	CONTRACTOR
DL	DEAD LOAD
DBA	DEFORMED BAR ANCHOR
DET	DETAIL
DIAG	DIAGONAL
DIA	DIAMETER
DIM	DIMENSION
DWLS	DOWEL
DWGS	DRAWINGS
EA	EACH
EF	EACH FACE
EW	EACH WAY
EL	ELEVATION
ELEV	ELEVATOR
EOS	EDGE OF SLAB
EQ	EQUAL
EQUIP	EQUIPMENT
EXIST	EXISTING
EXP JT	EXPANSION JOINT
EXT	EXTERIOR
FIN	FINISH
FF	FINISH FLOOR
FL	FLOOR
FTG	FOOTING
FDN	FOUNDATION
GALV	GALVANIZED
GA	GAUGE
HCA	HEADED CONCRETE ANCHOR
HEF	HORIZONTAL EACH FACE
HORIZ	HORISONTAL
HSS	HOLLOW STRUCTURAL SECTION
INT	INTERIOR
JST	JOIST
JT	JOINT
K	KIP = 1000 LBS.
L	ANGLE
LB	POUND
LL	LIVE LOAD
LLH	LONG LEG HORIZONTAL
LLV	LONG LEG VERTICAL
LSL	LONG - SLOTTED HOLES
MC	MOMENT CONNECTION
MO	MASONRY OPENING
MATL	MATERIAL
MAX	MAXIMUM
MECH	MECHANICAL
MIN	MINIMUM
MISC	MISCELLANEOUS
MTL	METAL
NOM	NOMINAL
NS-NM	NON-SHRINK, NON-METALLIC
NTS	NOT TO SCALE
OC	ON CENTER
OPNG	OPENING
OPP	OPPOSITE
OF	OUTSIDE FACE
PAF	POWDER ACTUATED FASTENER
PT	PRESSURE TREATED
REF	REFERENCE
REINF	REINFORCING
REQD	REQUIRED
SCHED	SCHEDULE
SECT	SECTION
SC	SHEAR CONNECTORS
SW	SHORT WAY
SHT	SHEET
SIM	SIMILAR
SOG	SLAB ON GRADE
SPA	SPACE, SPACING, SPACES
SPECS	SPECIFICATIONS
SQ	SQUARE
SSL	SHORT-SLOTTED HOLES
STD	STANDARD
STL	STEEL
STRUC	STRUCTURE OR STRUCTURAL
THK	THICKNESS
T	TOP OR TOP MOST
T2	TOP SECOND (SECOND LAYER FROM TOP)
TOS	TOP OF STEEL
TYP	TYPICAL
UNO	UNLESS NOTED OTHERWISE
VEF	VERTICAL EACH FACE
VERT	VERTICAL
W	WIDE FLANGE
WF	WALL FOOTING
WP	WORKING POINT
WWF	WELDED WIRE FABRIC
W/	WITH
W/O	WITHOUT
WT	WEIGHT

GENERAL STRUCTURAL NOTES

1. LOAD AND DESIGN/CONSTRUCTION CRITERIA
 A) DESIGN/CONSTRUCTION CRITERIA
  (1) INTERNATIONAL BUILDING CODE, 2009 EDITION
  (2) MINIMUM DESIGN LOADS FOR BUILDINGS AND OTHER STRUCTURES, AMERICAN SOCIETY OF CIVIL ENGINEERS, ASCE 7-05.
  (3) SEISMIC DESIGN REQUIREMENTS, DEPARTMENT OF VETERANS AFFAIRS, H-18-8.
  (4) BUILDING CODE REQUIREMENTS FOR STRUCTURAL CONCRETE, AMERICAN CONCRETE INSTITUTE ACI 318.
  (5) STEEL CONSTRUCTION MANUAL, AMERICAN INSTITUTE OF STEEL CONSTRUCTION (AISC), 13TH ADDITION.
  (6) ALLOWABLE STRESS DESIGN SPECIFICATION FOR COLD-FORMED STEEL STRUCTURAL MEMBERS, AMERICAN IRON AND STEEL INSTITUTE (AISC).
  (7) STRUCTURAL WELDING CODE - STEEL, AMERICAN WELDING SOCIETY (AWS), ANSI/AWS D1.1.
 B) LOAD CRITERIA
  (1) WIND LOADS:
   (a) IMPORTANCE FACTOR = 1.15
   (b) EXPOSURE CATEGORY = B
   (c) BASIC WIND SPEED = 90 MPH
   (d) INTERNAL PRESSURE COEFFICIENTS = +0.18 -0.18
  (2) SEISMIC LOADS:
   (a) SEISMIC DESIGN CATEGORY: A
   (b) SITE CLASS: C
   (c) IMPORTANCE FACTOR: 1.5
   (d) SPECTRAL RESPONSE COFFICIENTS: Sds = 0.08, Sd1 =0.06
   (e) RESPONSE MODIFICATION COEFFICIENT: 5
   (e) ANALYSIS PROCEDURE: EQUIVALENT LATERAL FORCE
   (f) SEISMIC FORCE RESISTING SYSTEMS: ORDINARY CONCRETE SHEAR WALL
  (3) SNOW LOADS:
   (a) IMPORTANCE FACTOR = 1.2
   (b) GROUND SNOW LOAD Pg = 25 PSF
   (c) ROOF SNOW Pf = 19 PSF
   (d) SNOW EXPOSURE Ce = 0.9
   (e) THERMAL FACTOR Ct = 1.0
   (f) FLAT ROOF SNOW LOAD = 24 PSF
  (4) LIVE LOADS AND SUPERIMPOSED DEAD LOADS:
   (a) ROOF LIVE LOADS: 25 PSF
   (b) FLOOR LIVE LOADS: SEE SHEET 1-S2
   (c) SUPERIMPOSED DEAD LOADS:
    PARTITIONS 20 PSF
    MECH/ELEC/PLUMB 10 PSF
    ARCHITECTURAL FINISHES 5 PSF
   (d) SPECIAL LOADING AREAS:
    (1) PARTITIONS: MINIMUM 5 PSF HORIZONTAL LOAD APPLIED UNIFORMLY TO FACE OF PARTITIONS.
 C) DEFLECTION CRITERIA:
  (1) ROOFS:
   (a) SPAN OF MEMBER DIVIDED BY 240
  (2) WALLS:
   (a) SPAN OF MEMBER DIVIDED BY 240
  (3) MEMBERS SUPPORTING BRICK:
   (a) SPAN OF MEMBER DIVIDED BY 600
 D) FOUNDATIONS:
  (1) FOUNDATION DESIGN IS BASED ON "GEOTECHNICAL ENGINEERING REPORT, PROPOSED VA MEDICAL CENTER ADDITION, IOWA CITY, IOWA", PREPARED BY TERRACON CONSULTANTS, INC., PROJECT NO. 06105663.01, DATED AUGUST 8, 2011.

2. MATERIALS
 A) CONCRETE
  (1) 28-DAY STRENGTH REQUIREMENTS FOR NORMAL WEIGHT CONCRETE:
   (a) FOOTINGS, PILE CAPS: 3000 PSI
   (b) CAISSONS: 3000 PSI
   (c) WALLS, BEAMS, JOISTS, SLABS: 4000 PSI
   (d) COLUMNS: 5000 PSI
  (2) REINFORCING: ASTM A-615, GRADE 60 (FY = 60,000 PSI)
  (3) WELDED WIRE FABRIC: ASTM A-185 FLAT SHEETS
 B) STRUCTURAL STEEL
  (1) WIDE FLANGE BEAMS: ASTM A-992 (FY = 50 KSI).
  (2) CHANNELS, ANGLES, PLATES: ASTM A-36 (FY = 36 KSI), UNO.
  (3) RECTANGULAR TUBULAR STEEL: ASTM A-500, GRADE B (FY= 46,000 PSI)
  (4) BOLTS
   (a) STRUCTURAL CONNECTIONS: ASTM A-325, X
   (b) ANCHORS: ASTM F-1554
   (c) HEADED CONCRETE ANCHORS: ASTM A-108

3. CONCRETE NOTES:
 A) REINFORCING
  (1) CONCRETE COVER FOR REINFORCING:
   CONCRETE DEPOSITED AGAINST AND PERMANENTLY EXPOSED TO EARTH 3"
   FORMED CONCRETE EXPOSED TO EARTH OR WEATHER
    #5 BARS OR SMALLER 1 1/2"
    #6 BARS OR LARGER 2"
   CONCRETE NOT EXPOSED TO WEATHER OR EXPOSED TO EARTH
    SLABS 1"
    CMU (INSIDE FACE OF CMU TO BAR) 1"
 B) ALL HOOKS ARE STANDARD LENGTH UNLESS NOTED OTHERWISE ON DRAWINGS
 C) HORIZONTAL WALL AND WALL FOOTING REINFORCEMENT: CONTINUOUS WITH 90 DEGREE BENDS AND EXTENSIONS, OR CORNER BARS OF EQUIVALENT SIZE WITH MINIMUM LAP SPLICE LENGTHS, AT CORNERS AND INTERSECTIONS.
 D) DOWELS:
  (1) FULL EMBEDMENT WITH 90 DEGREE HOOKS OR STRAIGHT WITH FULL TENSION DEVELOPMENT LENGTH WHERE DEPTH OF ELEMENT IS SUFFICIENT
  (2) MATCH SIZE AND SPACING OF MAIN REINFORCEMENT
  (3) CONFORM WITH MINIMUM LAP SPLICE REQUIREMENTS
 E) CONTINUOUS REINFORCEMENT: WHERE REINFORCEMENT IS NOTED AS CONTINUOUS AND CONTINUES THROUGH A SUPPORTING ELEMENT, LAP THE TOP BARS AT MID-SPAN AND THE BOTTOM BARS AT SUPPORTS WITH TENSION LAP SPLICES.
 F) CONSTRUCTION JOINTS
  (1) COMPLY WITH ACI 318.
  (2) KEYWAY DIMENSIONS: DEPTH - 1 1/2", WIDTH - ONE THIRD THAT OF MEMBER, UNLESS SHOWN OTHERWISE.
  (3) AT CONSTRUCTION JOINTS SHOWN WITHOUT SHEAR KEYS CLEAN INTERFACE OF LAITANCE AND INTENTIONALLY ROUGHEN CONTACT SURFACES A MINIMUM OF 1/4" AMPLITUDE.
  (4) HORIZONTAL JOINTS ARE NOT PERMITTED EXCEPT WHERE SHOWN.
  (5) LOCATE VERTICAL JOINTS AT POINTS OF MINIMUM SHEAR AT APPROVED LOCATIONS.
  (6) JOINTS IN SLABS-ON-GROUND: REFER TO SPECIFICATIONS FOR JOINT TYPE, AREA AND SIZE LIMITS FOR CONCRETE PLACEMENT.
 G) COMPLY WITH ACI 318 FOR CONDUITS AND PIPES EMBEDDED IN CONCRETE.

4. CMU NOTES
 A) WALLS: 8 INCH NOMINAL UNLESS NOTED OTHERWISE
 B) REINFORCING:
  (1) EXTERIOR: VERTICAL #5 AT 32 INCHES ON CENTER (UNLESS NOTED OTHERWISE) WITH DOWELS TO MATCH IN GROUTED CELLS.
  (2) INTERIOR: VERTICAL #4 AT 48 INCHES ON CENTER (UNLESS NOTED OTHERWISE) WITH DOWELS TO MATCH IN GROUTED CELLS.
  (3) SEE 3 ON S16 FOR REINF DETAILS AT CORNERS AND EACH SIDE OF OPENINGS.
  (4) LAP SPLICES
   (a) LAP VERTICAL REINFORCING 48 BAR DIAMETERS
 C) CMU WALLS ABUTTING COLUMNS: CONTINUOUS DOVETAIL SLOTS ARE REQUIRED AT ANCHORAGE TO STEEL COLUMNS AT 16" OC MAX
 D) LINTELS ARE REQUIRED OVER ALL OPENINGS AND RECESSES.
 E) BOND BEAMS: MINIMUM 8" X 8" CONTINUOUS BOND BEAM AT TOP OF WALLS. REINFORCE WITH 2- #4 CONTINUOUS REINFORCING BARS.

5. EXTERIOR LOAD BEARING METAL STUD
 A) 6" METAL STUD AT 16" OC (UNO)
 B) A MINIMUM OF 10 INCHES OF UN-PUNCHED STUD IS REQUIRED TOP AND BOTTOM OF STUDS, BELOW HEADERS, AND EACH END OF HEADERS.
 C) BUTT WELD OR SPLICE TRACK JOINTS NOT SECURELY ANCHORED TO A DOUBLE STUD.
 D) TOUCH UP WELDS WITH ZINC RICH PAINT.
 E) CUT FRAMING COMPONENTS SQUARE FOR FULL BEARING IN TRACK OR FOR ATTACHMENT TO OTHER ELEMENTS. NO SHOP SPLICES OR FIELD CUTS IN LOAD-BEARING STUDS ARE PERMITTED.
 F) IN DOUBLE STUDS (JAMBS AND HEADERS) NOT ACCESSIBLE TO INSULATION, CONTRACTOR SHALL INSTALL INSULATION EQUAL TO THE SPECIFIED INSULATION BEFORE CLOSING STUD GROUPS.
 G) LATERAL BRACING
  (1) 1 1/2" MIN COLD-ROLLED CHANNEL BRIDGING LOCATED AT APPROX. 1/3 POINTS (3'-8" MAX SPACING) OF WALL STUDS THROUGH STUD PUNCHOUTS.
  (2) WELD CHANNNEL BRIDGING SECURELY TO WALL STUDS TO PREVENT TWISTING.

6. EXTERIOR ENCLOSURE:
 A) CURTAINWALL
  (1) CURTAINWALL IS TO SPAN VERTICALLY.
  (2) LOCATE AND INSTALL EMBEDMENTS FOR CONNECTION OF CURTAINWALL ELEMENTS TO BUILDING STRUCTURE FROM EMBEDMENT LOCATION PLANS AS SUBMITTED BY THE CURTAINWALL CONTRACTOR.
  (3) DESIGN OF THE CONNECTION BETWEEN CURTAINWALL AND STRUCTURE IS BY THE CURTAINWALL CONTRACTOR.
 B) STOREFRONT AND PUNCHED WINDOWS
  (1) FRAMES FOR STOREFRONT AND PUNCHED WINDOWS ARE TO SPAN VERTICALLY TO THE STRUCTURE ABOVE OR BELOW THE FRAME.
  (2) DESIGN OF THE CONNECTION BETWEEN THE STOREFRONT AND PUNCHED WINDOW FRAMES AND THE STRUCTURE IS BY THE STOREFRONT/PUCHED WINDOW CONTRACTOR.

7. MISCELLANEOUS
 A) ELEVATIONS:
  (1) ELEVATIONS ARE LEVEL 1 SLAB ELEVATION = 0'-0" (UNO).
  (2) CIVIL DATUM ELEVATION = 710.84' FOR LEVEL 1.
 B) COORDINATE SLOPES TO FLOOR DRAINS WITH PLUMBING AND ARCHITECTURAL REQUIREMENTS. REQUIRED SLOPES TO FLOOR DRAINS ARE NOT SHOWN ON THE STRUCTURAL DRAWINGS.
 C) OPENINGS
  (1) OPENINGS LESS THAN OR EQUAL TO 14" IN THE LARGEST DIMENSION ARE TYPICALLY NOT SHOWN ON THE DRAWINGS.
   (a) FOR LOCATION, SIZE AND TYPE OF OPENINGS OR SLEEVES REQUIRED TO PENETRATE SLABS AND DECKS REFER TO THE REMAINDER OF THE CONTRACT DOCUMENTS.
  (2) OPENINGS NOT INTERRUPTING MAJOR STRUCTURAL ELEMENTS ARE SHOWN FOR THE CONTRACTOR'S CONVENIENCE.
   (a) COORDINATE FINAL SIZE AND LOCATION WITH EQUIPMENT SUPPLIED, SUB-CONTRACTOR REQUIREMENTS, AND WITH FIELD CONDITIONS.
   (b) OPENINGS NOT SHOWN ON THE STRUCTURAL DRAWINGS OR DEVIATING IN SIZE OR LOCATION MORE THAN 4 INCHES ARE TO BE SPECIFICALLY NOTED ON THE APPLICABLE STRUCTURAL SHOP DRAWINGS AND SUBMITTED FOR APPROVAL BY THE ARCHITECT.
  (3) NO OPENINGS ARE PERMITTED THROUGH BEAMS OR COLUMNS UNLESS DETAILED ON THE STRUCTURAL DRAWINGS.
 D) ELEVATOR REQUIREMENTS
  (1) COORDINATE ELEVATOR PIT, SHAFT AND PENTHOUSE DIMENSIONS WITH APPROVED SHOP DRAWINGS PRIOR TO BEGINNING CONSTRUCTION IN AFFECTED AREAS.

8. STEEL NOTES
 A) DIMENSIONS (UNLESS NOTED OTHERWISE):
  (1) TO CENTERLINE OF COLUMNS AND BEAMS.
  (2) TOP SURFACES OF TOP FLANGES OF BEAMS.
  (3) BACK OF CHANNEL AND ANGLES.
  (4) ELEVATIONS: REFER TO TOP SURFACE OF FLANGE OF MEMBER AND TOP OF BEARING PLATES.
 B) CONNECTIONS
  (1) BOLTED CONNECTIONS (UNLESS NOTED OTHERWISE):
   (a) MINIMUM BOLT DIAMETER: 3/4 INCH
   (b) MINIMUM TWO BOLTS PER CONNECTION
   (c) TIGHTEN TO SNUG TIGHT CONDITION
  (2) WELDED CONNECTIONS
   (a) FOR WELD SIZES NOT INDICATED ON DRAWINGS USE MINIMUM WELD SIZE FOR CONNECTED MATERIALS IN ACCORDANCE WITH AISC AND AWS.
  (3) BEAM TO BEAM OR BEAM TO COLUMN CONNECTIONS
   (a) CONFORM TO FRAMED BEAM CONNECTIONS IN PART 4 OF THE AISC MANUAL OF STEEL CONSTRUCTION FOR CONNECTIONS NOT DETAILED ON THE DRAWINGS
 C) OPEN WEB STEEL JOISTS
  (1) WHERE BRIDGING INTERFERES WITH MECHANICAL DUCTWORK FROM ROOF MOUNTED EQUIPMENT #ELOCATER BRIDGING TO EITHER SIDE OF THE INTERFERENCE AND LAP TWO JOIST SPACES WITH UNINTERRUPTED BRIDGING.
  (2) SLOPED JOISTS:
   (a) MATCH BEARING SURFACE OF JOIST WITH SURFACE OF SUPPORTING ELEMENT.
   (b) MAINTAIN JOISTS VERTICAL WHEN BEARING ON SLOPED ELEMENTS.
  (3) CONNECTIONS TO JOISTS:
   (a) WELD FIELD CONNECTIONS TO JOISTS OR USE OTHER METHODS TO ELIMINATE DRILLING HOLES IN JOIST CHORDS.
  (4) HANGING LOADS:
   (a) DESIGN JOISTS FOR MAXIMUM HANGING LOAD OF 300 POUNDS PERMISSIBLE AT ANY ONE POINT ON THE JOIST BOTTOM CHORDS BETWEEN JOIST PANEL POINTS. IF MULTIPLE LOADS ARE APPLIED BETWEEN JOIST PANEL POINTS, DO NOT EXCEED A TOTAL OF 300 POUNDS HANGNG FROM AN INDIVIDUAL JOIST.
 D) STEEL STAIRS
  (1) COORDINATE EMBEDMENT/BLOCKOUTS REQUIRED FOR CONNECTION OF STEEL STAIR SUPPORT MEMBERS TO THE STRUCTURE WITH ARCHITECTURAL DETAILS AND APPROVED SHOP DRAWINGS.

TENSION LAP SPLICES - Fc = 4000 psi

BAR SIZE	LAP CLASS	LAP LENGTH PER SPACING AND COVER CASE: CASE 1, TOP BARS	CASE 1, OTHER BARS	CASE 2, TOP BARS	CASE 2, OTHER BARS	COMPRESSION LAP SPLICES
#3	A	19	15	28	22	12
	B	25	19	37	28	
#4	A	25	19	37	29	15
	B	33	25	49	37	
#5	A	31	24	47	36	19
	B	41	31	61	47	
#6	A	37	29	56	43	23
	B	49	37	73	56	
#7	A	54	42	81	63	27
	B	71	54	106	81	
#8	A	62	48	93	72	30
	B	81	62	121	93	
#9	A	70	54	105	81	34
	B	91	70	136	105	
#10	A	79	61	118	91	39
	B	102	79	153	118	
#11	A	87	67	131	101	43
	B	114	87	170	131	

NOTES:

CASE 1

BEAMS AND SLABS:
CONCRETE COVER >/= TO BAR DIAMETER, C-C BAR SPACING >/= TO 2X BAR DIAMETER AND WITH STIRRUPS OR TIES THROUGHOUT
TENSION LAP SPLICE LENGTH NOT LESS THAN THE CODE MINIMUM.

OTHER MEMBERS:
CONCRETE COVER >/= TO THE BAR DIAMETER AND
C-C BAR SPACING >/= TO 3X BAR DIAMETER.

CASE 2

BEAMS AND SLABS:
CONCRETE COVER < BAR DIAMETER AND
C-C BAR SPACING < TO 2X BAR DIAMETER.

OTHER MEMBERS:
CONCRETE COVER < THE BAR DIAMETER OR
C-C BAR SPACING < TO 3X BAR DIAMETER.

Revisions	Date	Revisions	Date	Revisions	Date

HEERY design
Heery International Inc.
125 South Dubuque Street,
Suite 500,
Iowa City, IA 52240-4003
319.354.4700

project number 11-25503

Drawing Title: GENERAL NOTES

CONSTRUCTION DOCUMENTS

Project Title: EXPAND BLDG. 1 FOR PACT AMBULATORY CARE, RADIOLOGY, EGRESS STAIRWELL

Building No.: BLDG 1 | Checked: CT | Drawn: NS

Location: ICVA HEALTH CARE SYSTEM

Date: 07/01/2014

Project No.: 636-201

DRAWING NO. 1-S1

Office of Facilities

Department of Veterans Affairs

VA FORM 08-6231, FEB. 1983

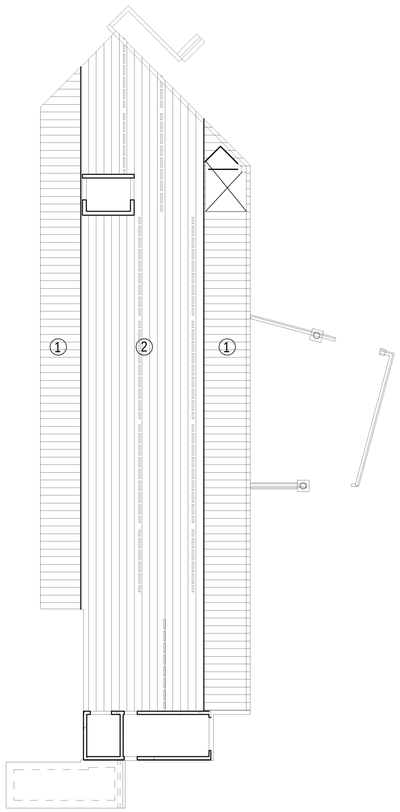

1 Level 1 - Loading
1/16" = 1'-0"

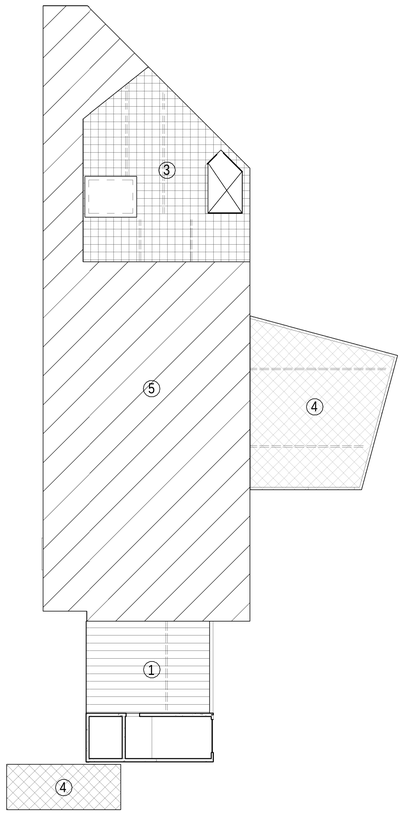

2 Level 2 - Loading - Base Bid & Alternate 4
1/16" = 1'-0"

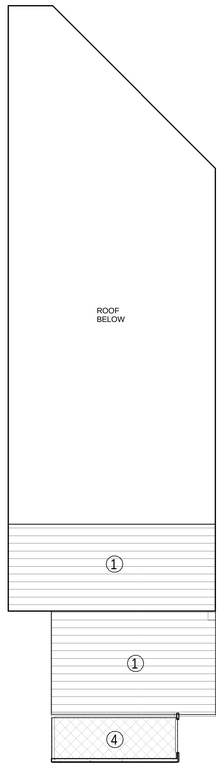

3 Level 3 - Loading - Base Bid
1/16" = 1'-0"

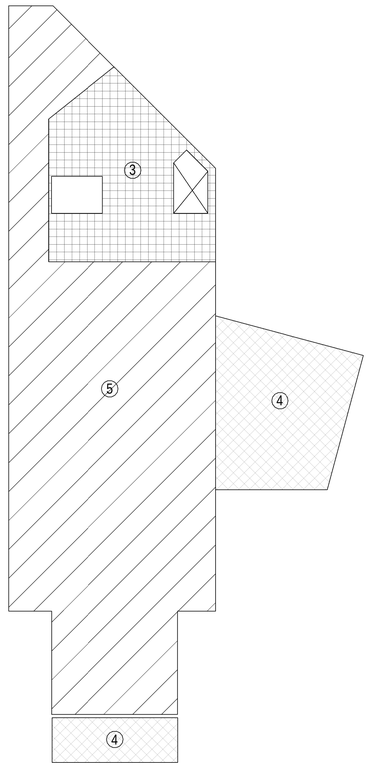

4 Level 2 - Loading - Alternate 5
1/16" = 1'-0"

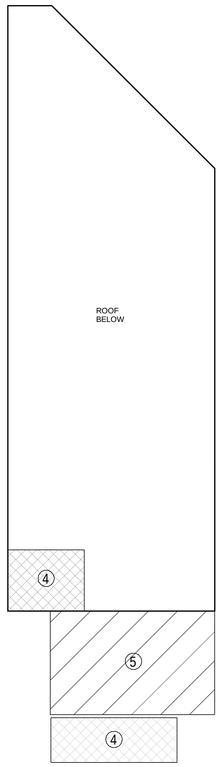

5 Level 3 - Loading - Alternate 4
1/16" = 1'-0"

DESIGN WIND PRESSURE ZONES

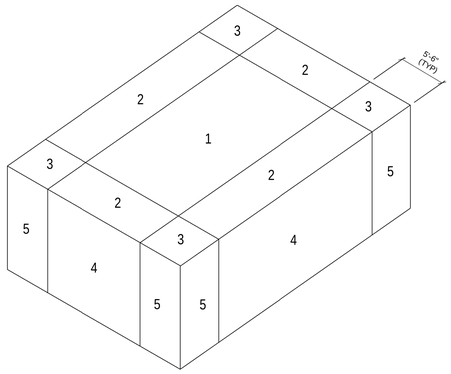

ROOF SNOW DRIFT DIAGRAM

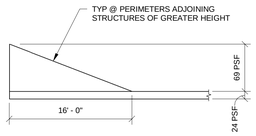

DESIGN WIND PRESSURES IN lb/ft² (PSF)	EFF WIND AREA	ZONE 1		ZONE 2		ZONE 3		ZONE 4		ZONE 5	
		(+)	(-)	(+)	(-)	(+)	(-)	(+)	(-)	(+)	(-)
	20ft²	6.4	-16.3	6.4	-25.1	6.4	-35.1	16.0	-17.4	16.0	-20.9
	50ft²	5.9	-15.8	5.9	-21.2	5.9	-25.4	15.0	-16.4	15.0	-19.0
	100ft²	5.4	-15.3	5.4	-18.2	5.4	-18.2	14.3	-15.6	14.3	-17.0

LIVE LOAD SCHEDULE:

- FLOOR LIVE LOADS

1 TYPICAL FLOOR = 80 PSF
2 CORRIDORS & LOBBIES = 100 PSF
3 MECHANICAL ROOMS = 150 PSF

- ROOF LIVE LOADS

4 TYPICAL ROOF = 25 PSF
5 FORMWORK & SHORING FOR FUTURE EXPANSION = 150 PSF

Revisions	Date	Revisions	Date	Revisions	Date

HEERY design
Heery International Inc.
125 South Dubuque Street,
Suite 500,
Iowa City, IA 52240-4003
319.354.4700

project number
11-25503

Drawing Title
DESIGN LOAD DATA

CONSTRUCTION DOCUMENTS

Project Title
EXPAND BLDG. 1 FOR PACT AMBULATORY CARE, RADIOLOGY, EGRESS STAIRWELL

Building No. BLDG 1 | Checked CT | Drawn NS

Location
ICVA HEALTH CARE SYSTEM

Date **07/01/2014**

Project No. **636-201**

DRAWING NO. **1-S2**

Office of Facilities

Department of Veterans Affairs

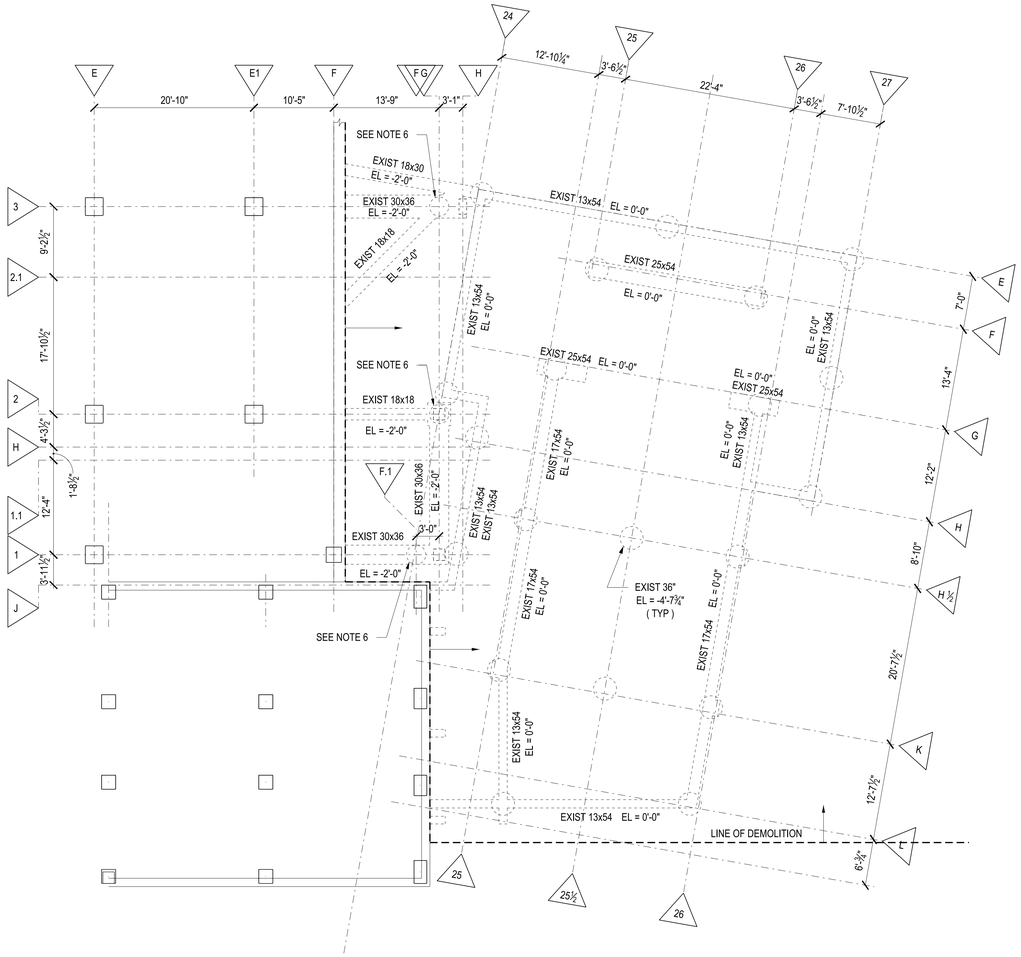

1 CAISSON & GRADE BEAM DEMO
⅛" = 1'-0"

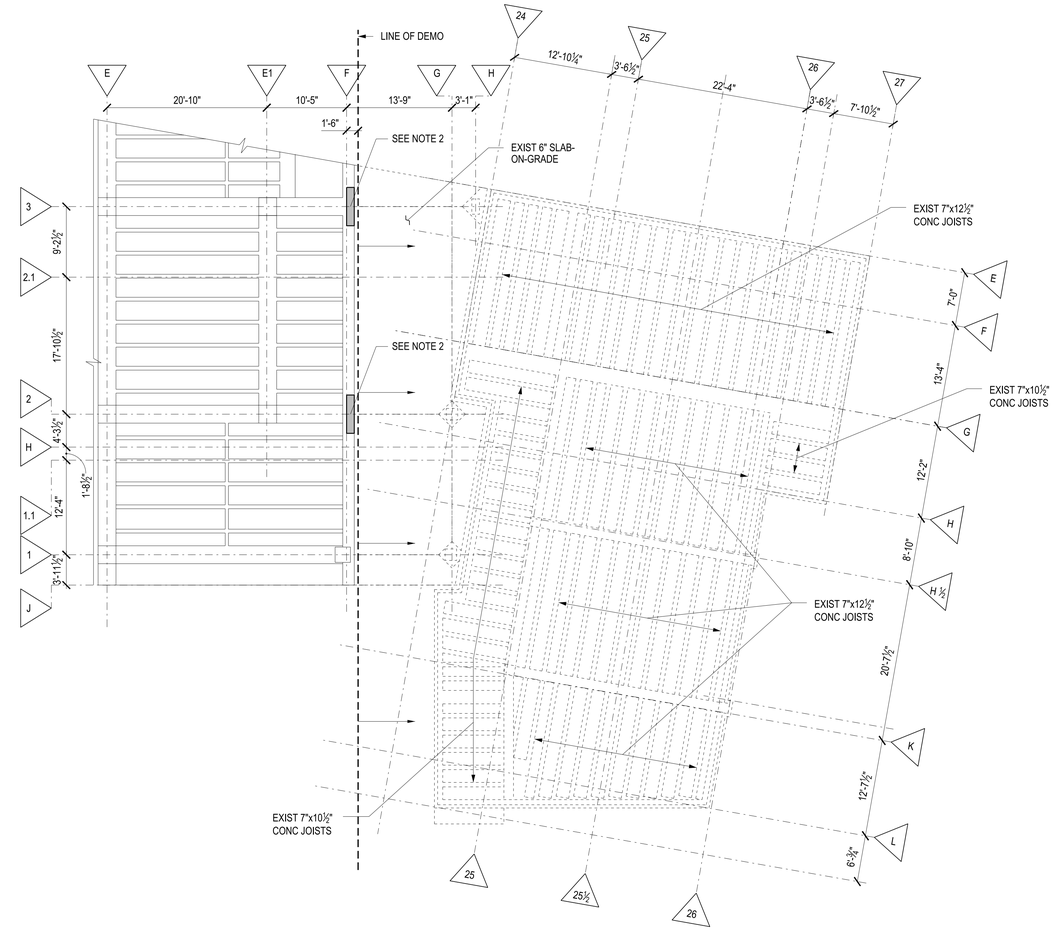

2 CHAPEL LEVEL 1 / BLDG 1 LEVEL 1 DEMO
⅛" = 1'-0"

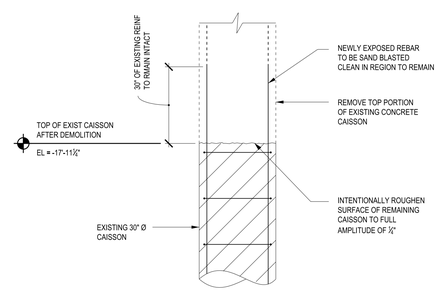

3 PARTIAL DEMOLITION OF EXISTING CAISSONS G-2, G-3, F.1-1

GENERAL DEMOLITION NOTES:

1) DASHED LINES INDICATE STRUCTURE TO BE DEMOLISHED.

2) NO DEMOLITION IN EXISTING BUILDING 1 SHALL OCCUR UNTIL NEW CONCRETE WALLS AT F2 & F3 ARE INSTALLED AND CONCRETE HAS REACHED 28 DAY COMPRESSIVE STRENGTH. SEE DETAILS 2/1-S15 AND 3/1-S15 FOR NEW WALL CONSTRUCTION DETAILS.

3) CHAPEL BUILDING WILL BE COMPLETELY DEMOLISHED AND REMOVED AS PER THE EXTENTS SHOWN ON SHEETS 1-S3 AND 1-S4. CHAPEL CONSTRUCTION CONSISTS OF CONCRETE JOIST & BEAM CONSTRUCTION AT UPPER ROOF, LOWER ROOF, AND FLOOR FRAMING LEVELS.

4) IN DEMO AREA, BLDG 1 TOP OF EXISTING CAISSON EL = -4'-6". CHAPEL TOP OF EXISTING CAISSON EL = -4'-7¾".

5) UNLESS NOTED OTHERWISE, CAISSONS IN DEMO AREA TO BE FULLY DEMOLISHED AND REMOVED DOWN TO ELEVATION = -20'-0".

6) EXISTING BUILDING 1 CAISSONS F.1-1, G-2, G-3 TO BE RE-USED IN PROPOSED BUILDING FOUNDATION SYSTEM. SEE DETAIL 3/1-S3 FOR REQUIRED DEMOLITION AND CONCRETE AND REBAR SURFACE TREATMENT REQUIREMENTS.

7) REVIEW THE EXISTING STRUCTURAL AND ARCHITECTURAL DRAWINGS FOR THE CHAPEL FOR FRAMING SIZES AND DETAILS.

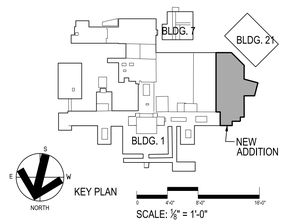

Revisions	Date	Revisions	Date	Revisions	Date

HEERY design

Heery International Inc.
125 South Dubuque Street,
Suite 500,
Iowa City, IA 52240-4003
319.354.4700

project number
11-25503

Drawing Title
DEMOLITION PLAN - FOUNDATION & LEVEL 1

CONSTRUCTION DOCUMENTS

Project Title
EXPAND BLDG. 1 FOR PACT AMBULATORY CARE, RADIOLOGY, EGRESS STAIRWELL

Building No. BLDG 1 | Checked CT | Drawn NS

Location ICVA HEALTH CARE SYSTEM

Date 07/01/2014

Project No. 636-201

DRAWING NO. 1-S3

Office of Facilities

Department of Veterans Affairs

PROJECT: IC - VAMC - EXPAND BLDG. 1 FOR PACT PROJECT
SHEET TITLE: \\VACSVI002-\dem1\10\1020600_CADD\1-S3-1020600-VAC.dgn
DATE: 7/9/2014
PLOTTED BY: cardwell
PEN TABLE: HB_IPLOT.Structural18.pen

VA FORM 08-6231, FEB. 1983

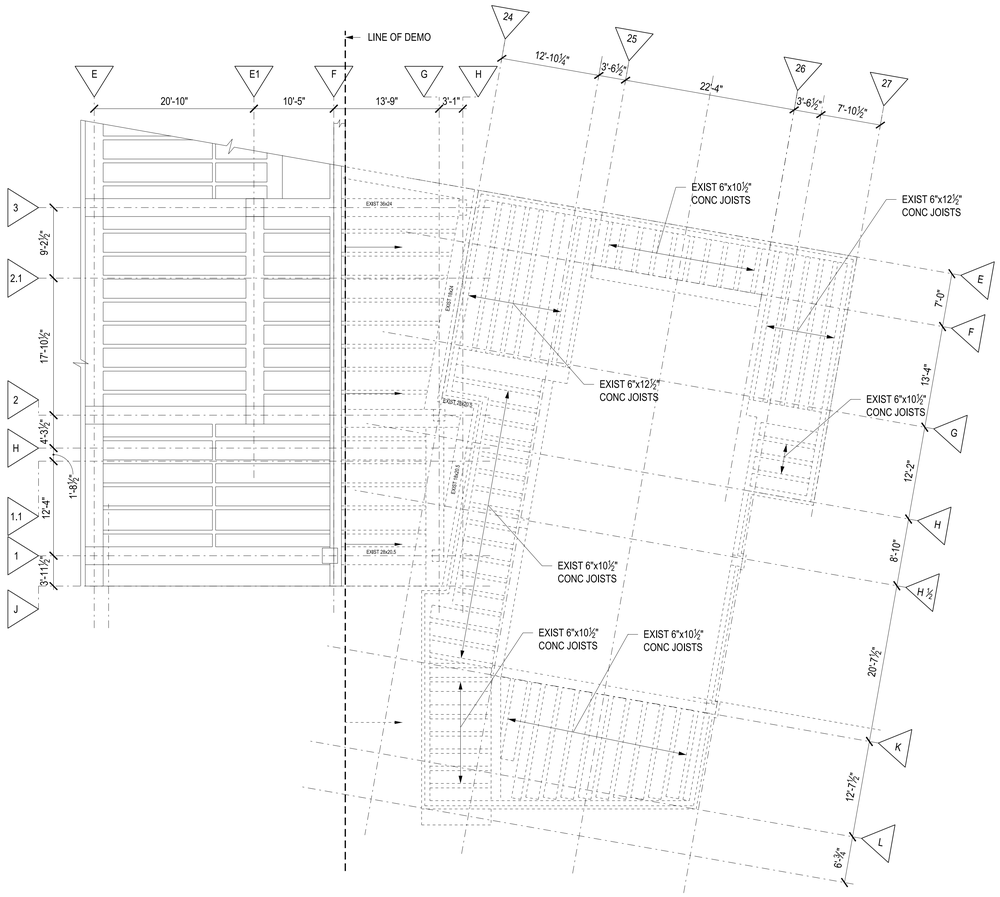

1 CHAPEL LOW ROOF / BLDG 1 LEVEL 2 DEMO PLAN
3/32" = 1'-0"

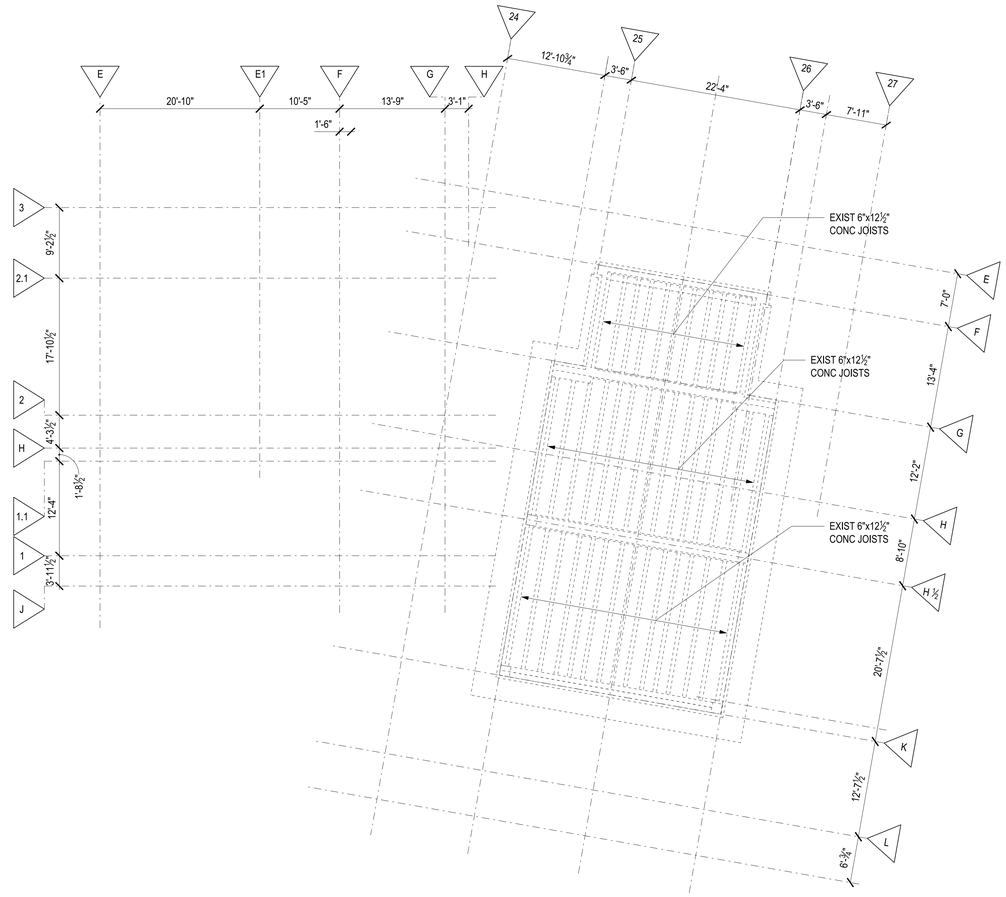

2 CHAPEL UPPER ROOF DEMO PLAN
3/32" = 1'-0"

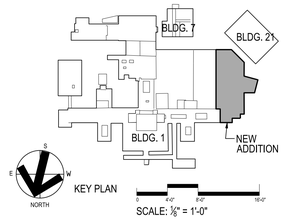

Revisions	Date	Revisions	Date	Revisions	Date

HEERY design

Heery International Inc.
125 South Dubuque Street,
Suite 500,
Iowa City, IA 52240-4003
319.354.4700

project number
11-25503

Drawing Title
DEMOLITION PLAN - LEVEL 2 & CHAPEL ROOF

CONSTRUCTION DOCUMENTS

Project Title
EXPAND BLDG. 1 FOR PACT AMBULATORY CARE, RADIOLOGY, EGRESS STAIRWELL

Building No. **BLDG 1** | Checked CT | Drawn NS

Location
ICVA HEALTH CARE SYSTEM

Date **07/01/2014**

Project No. **636-201**

DRAWING NO. **1-S4**

Office of Facilities

Department of Veterans Affairs

VA FORM 08-6231, FEB. 1983

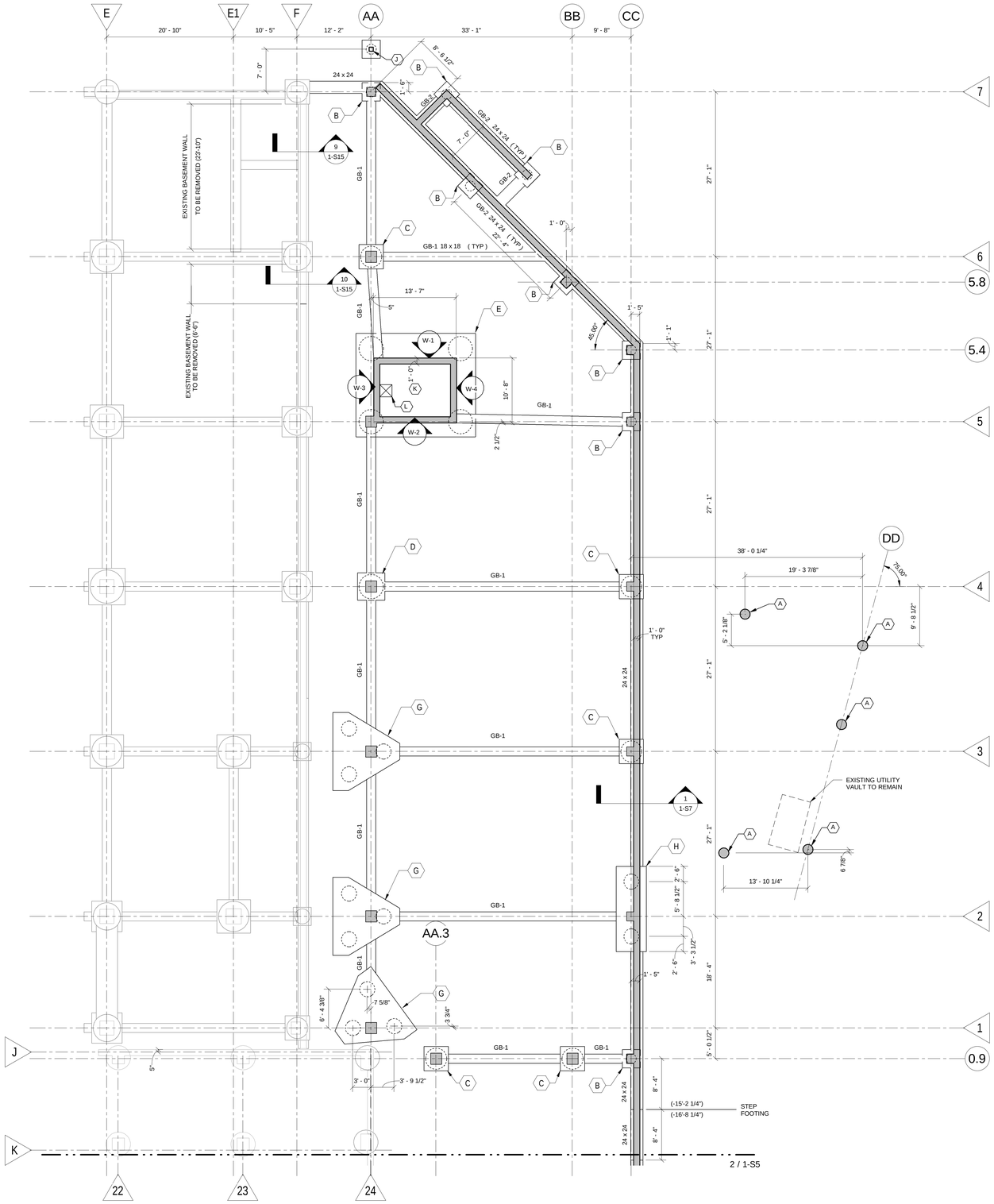

1 ZONE A
1/8" = 1'-0"

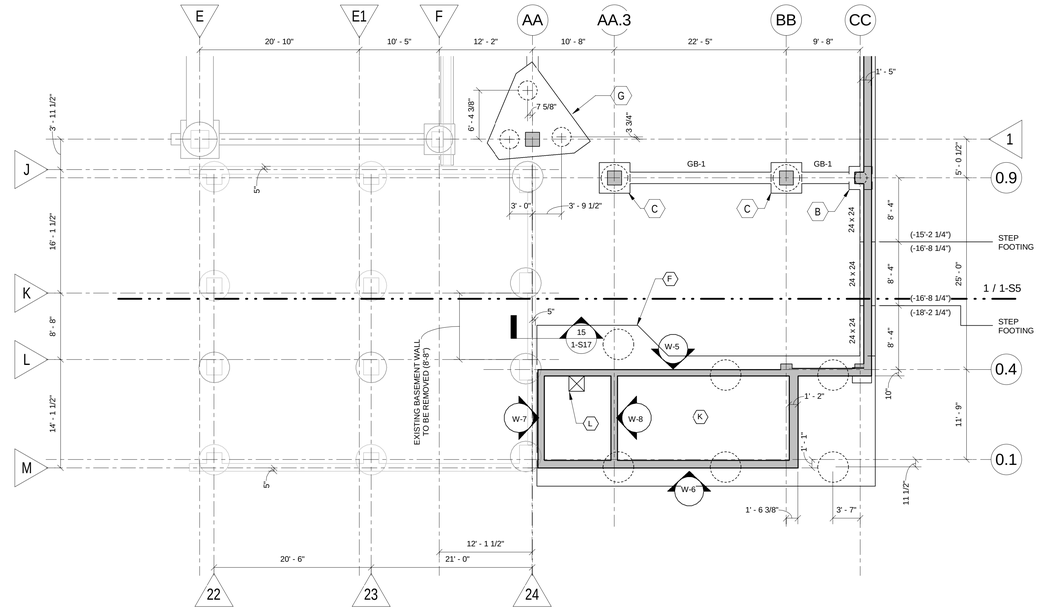

2 ZONE B
1/8" = 1'-0"

NOTES :

1. SEE SHEET 1-S1 FOR GENERAL NOTES.
2. TOP OF FOOTING, CAISSON CAP, & GRADE BEAM EL = -15'-2 1/4" UNO.
3. TOP OF CAISSON EL = -17'-11 1/4" UNO.
4. BOT OF CAISSON EL = -57'-11 1/4" UNO FOR BASIS OF BID LENGTH. CAISSON TO EXTEND 48" INTO LIMESTONE BEDROCK.
5. SEE 1-S7 FOR GRADE BEAM SCHEDULE.
6. "W-X" INDICATES THE CONCRETE WALL ELEVATION, SEE SHEETS 1-S19 THROUGH 1-S21.

KEYED NOTES :

(A) - (J) SEE 1-S7 FOR CAISSON AND CAP SCHEDULE

(K) TOP OF FOUNDATION EL = -18'-2 1/4"

(L) ELEVATOR SUMP PIT - SEE DETAIL 5/1-S8 COORDINATE PIT LOCATION WITH ELEVATOR SHOP DRAWINGS.

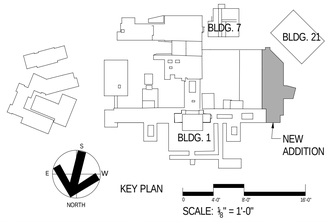

Revisions	Date	Revisions	Date	Revisions	Date

HEERY design
Heery International Inc.
125 South Dubuque Street,
Suite 500,
Iowa City, IA 52240-4003
319.354.4700

project number
11-25503

Drawing Title
FOUNDATION PLAN, ZONE A AND B

CONSTRUCTION DOCUMENTS

Project Title
EXPAND BLDG. 1 FOR PACT AMBULATORY CARE, RADIOLOGY, EGRESS STAIRWELL

Building No. BLDG 1 | Checked CT | Drawn NS

Location
ICVA HEALTH CARE SYSTEM

Date **07/01/2014**

Project No. **636-201**

DRAWING NO. **1-S5**

Office of Facilities

Department of Veterans Affairs

VA FORM 08-6231, FEB. 1983

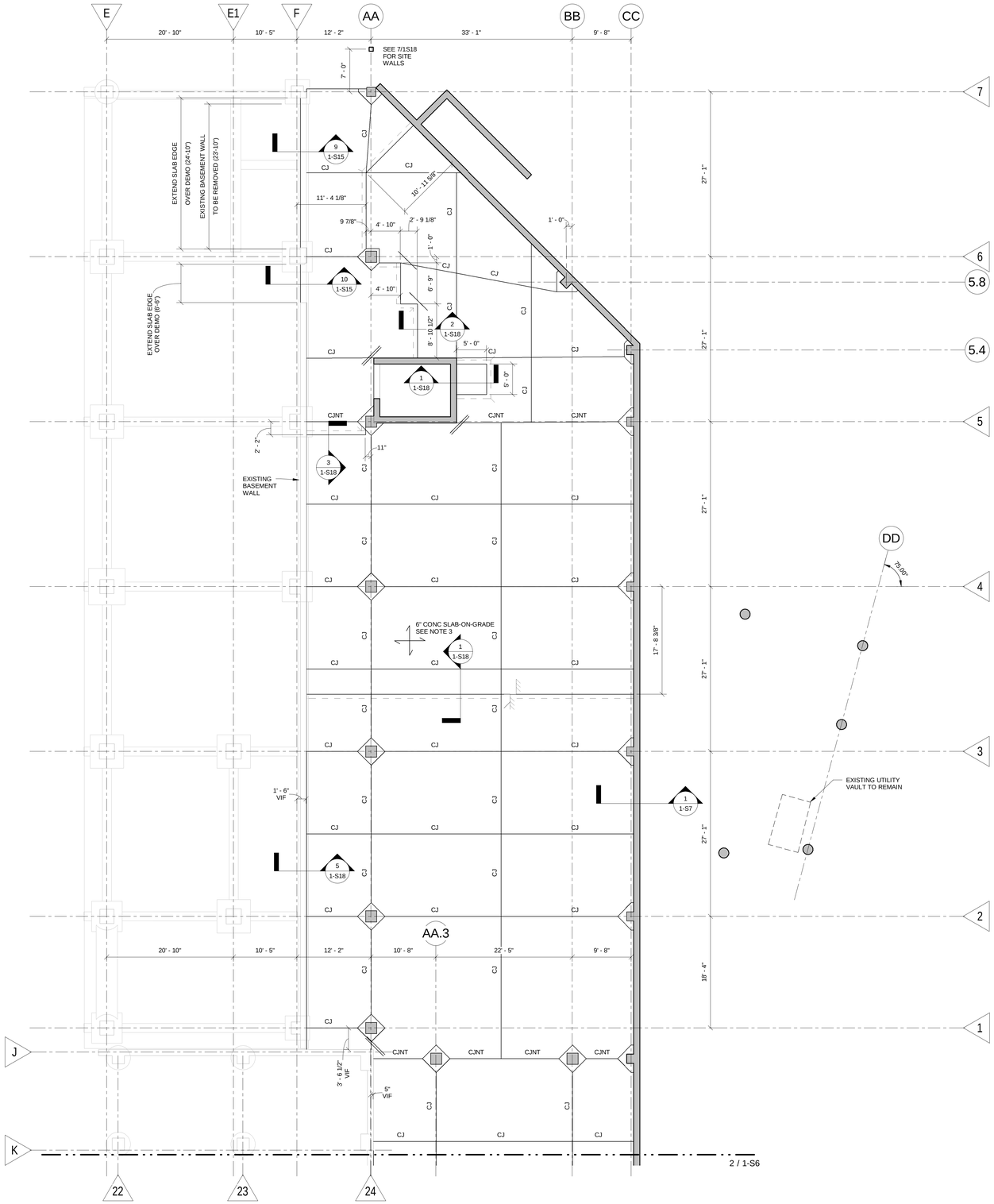

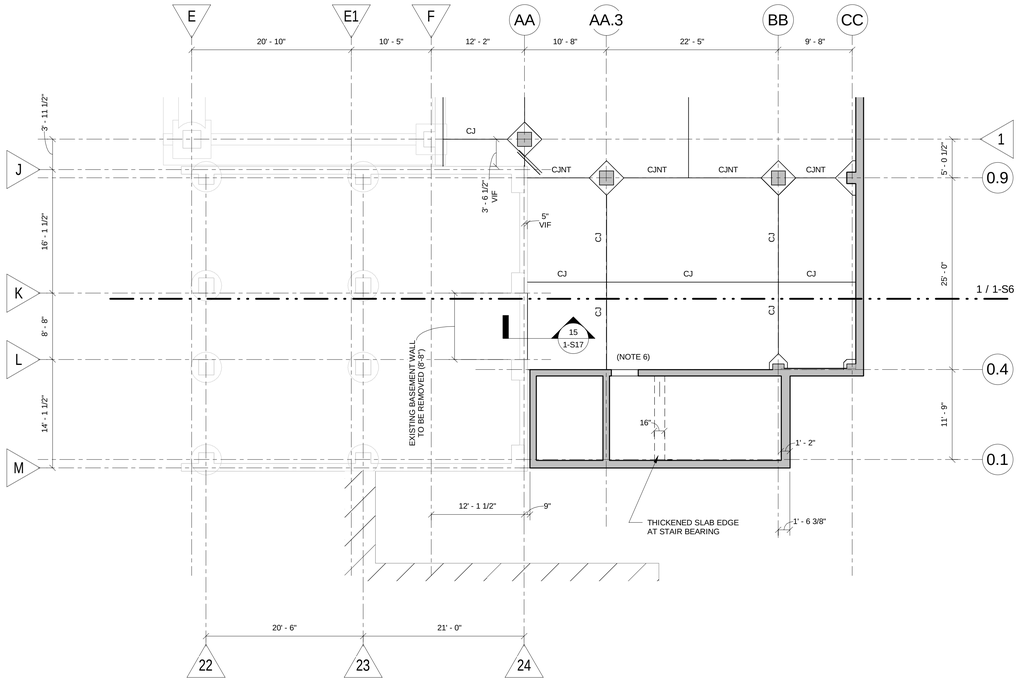

NOTES :

1. SEE SHEET 1-S1 FOR GENERAL NOTES.
2. REVIEW STRUCTURAL DETAIL SHEETS FOR TYPICAL DETAILS FOR THIS PROJECT. TYPICAL DETAILS ARE NOT NECESSARILY CUT ON THE PLAN SHEETS.
3. 6" CONCRETE SLAB-ON-GRADE - REINF w/ #3 @ 16" OC EA WAY - SUPPORTED ON P/C BLOCKS.
4. TOP OF SLAB EL = -13'-2 1/4", UNO.
5. SEE DETAIL 9/1-S7 FOR ADDITIONAL SLAB REINFORCEMENT AT CORNERS.
6. DIMENSION TO BE COORDINATED w/ REVIEWED SHOP DRAWINGS AND CALCULATIONS FOR PRE-ENGINEERED, PRE-FABRICATED METAL PAN STAIRS.

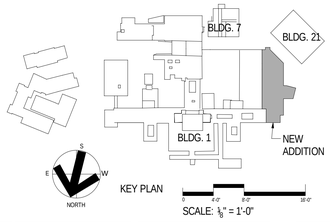

Revisions	Date	Revisions	Date	Revisions	Date

HEERY design

Heery International Inc.
125 South Dubuque Street,
Suite 500,
Iowa City, IA 52240-4003
319.354.4700

project number
11-25503

Drawing Title
FLOOR PLAN BASEMENT, ZONE A AND B

CONSTRUCTION DOCUMENTS

Project Title
EXPAND BLDG. 1 FOR PACT AMBULATORY CARE, RADIOLOGY, EGRESS STAIRWELL

Building No. BLDG 1 | Checked CT | Drawn NS

Location
ICVA HEALTH CARE SYSTEM

Date **07/01/2014**

Project No. **636-201**

DRAWING NO. **1-S6**

Office of Facilities

Department of Veterans Affairs

VA FORM 08-6231, FEB. 1983

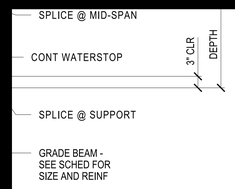

GRADE BEAM

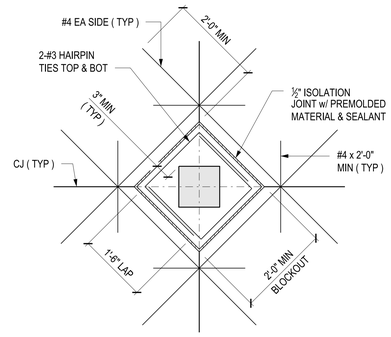

5 TYP ISOLATION JOINT
AT INTERIOR CONC COLUMN

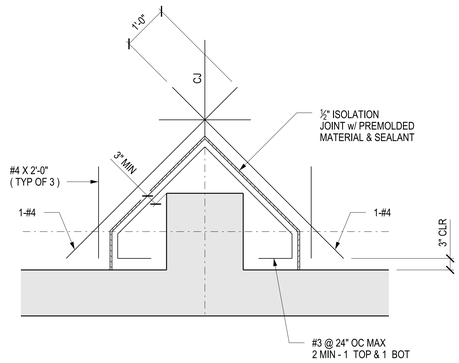

6 TYP ISOLATION JOINTS AT BASEMENT

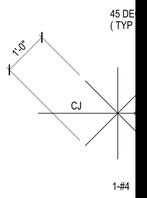

ULE
REMARKS
SEE 8/1-S8 FOR CAP DIM & REINF
SEE 9/1-S8 FOR CAP DIM & REINF
SEE 13/1-S8 FOR CAP DIM & REINF
SEE 14/1-S8 FOR CAP DIM & REINF
EXTEND REINF 20'-0" BELOW BOT OF CAP

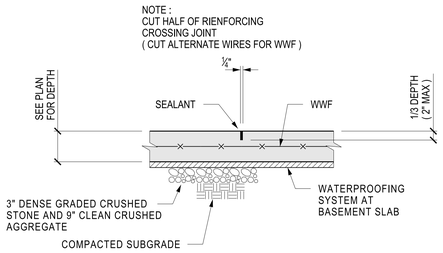

7 TYP CONTROL JOINT - SAW CUT
(= CJ ON PLAN)

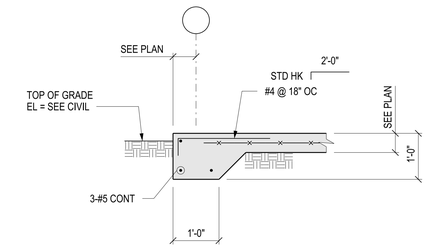

1 TYP THICKENED SLAB EDGE

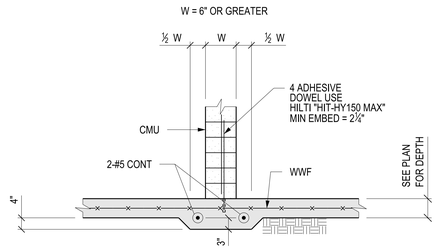

2 TYP THICKENED SLAB AT CONC. BLOCK WALLS

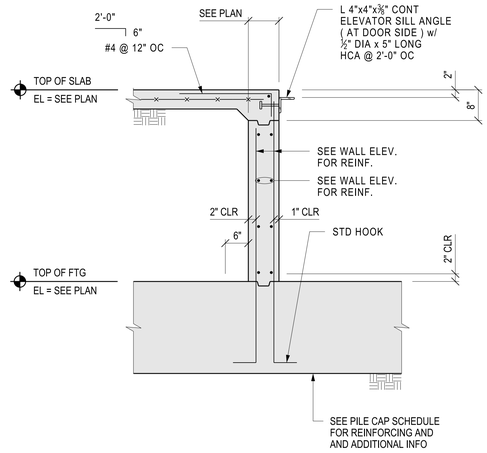

3 TYP CONC WALL AT ELEVATOR PIT
SILL ON PILE CAP

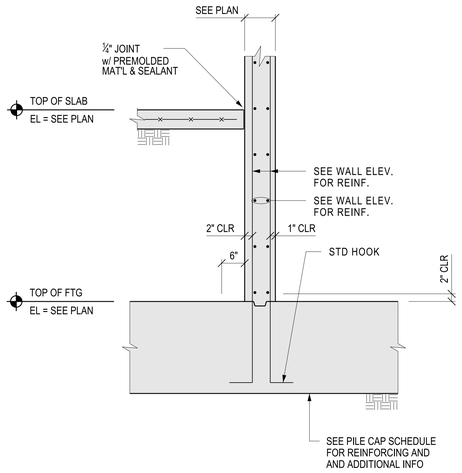

4 TYP CONC WALL AT ELEVATOR PIT
ON PILE CAP

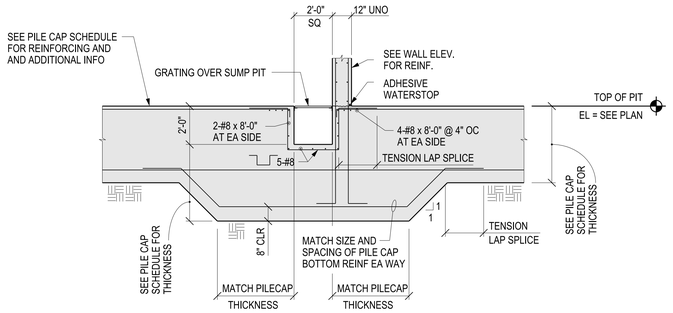

5 TYP ELEVATOR SUMP PIT

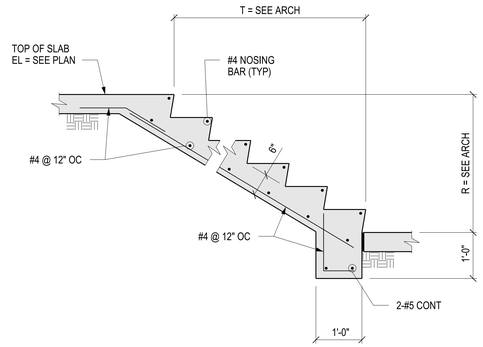

6 TYP CONCRETE STAIR

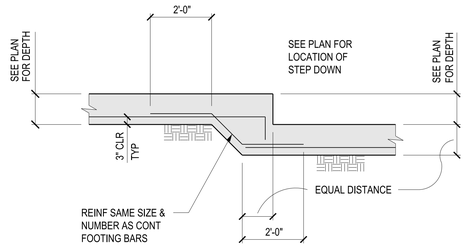

7 TYP STEP FOOTING

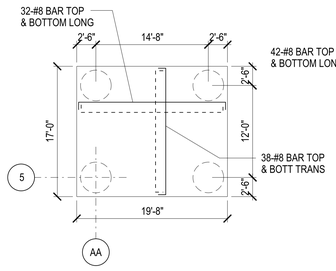

8 CAISSON CAP DETAIL

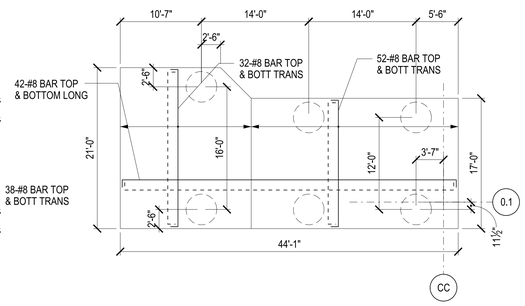

9 CAISSON CAP DETAIL

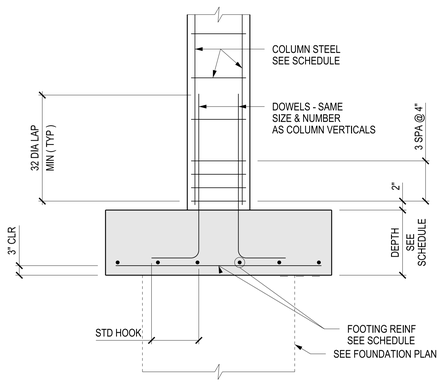

10 TYP CONCRETE COLUMN FOOTING

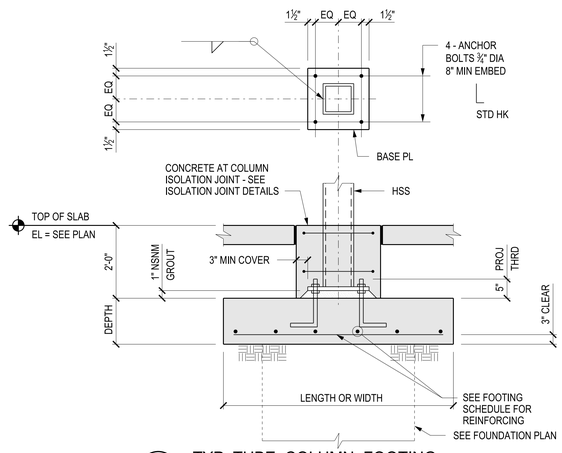

11 TYP TUBE COLUMN FOOTING

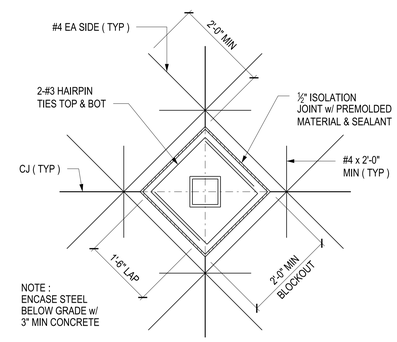

12 TYP ISOLATION JOINT
AT INTERIOR STEEL COLUMN

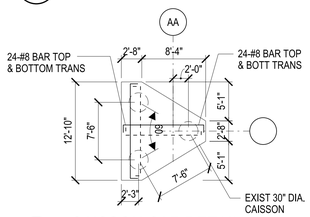

13 CAISSON CAP DETAIL
SHOWING TYPICAL LOCATION

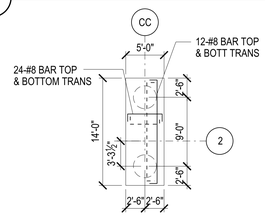

14 CAISSON CAP DETAIL

Revisions	Date	Revisions	Date	Revisions	Date

HEERY design
Heery International Inc.
125 South Dubuque Street,
Suite 500,
Iowa City, IA 52240-4003
319.354.4700

project number
11-25503

Drawing Title
FOUNDATION DETAILS
AND SCHEDULES

CONSTRUCTION DOCUMENTS

Project Title
EXPAND BLDG. 1 FOR PACT AMBULATORY CARE, RADIOLOGY, EGRESS STAIRWELL

Building No. **BLDG 1** | Checked CT | Drawn NS

Location
ICVA HEALTH CARE SYSTEM

Date **07/01/2014**
Project No. **636-201**
DRAWING NO. **1-S8**

Office of Facilities
Department of Veterans Affairs

VA FORM 08-6231, FEB. 1983

PROJECT: IC-VAMC- EXPAND BLDG. 1 FOR PACT PROJECT
SHEET TITLE: \\VACSVOOO2.vhm.lh\10\0206001_CADD\1-S8-10206001-MC.dgn
DATE: 7/01/2014 PEN TABLE: HP_PLOT.Structural.tbl
PLOTTED BY: randy.miller

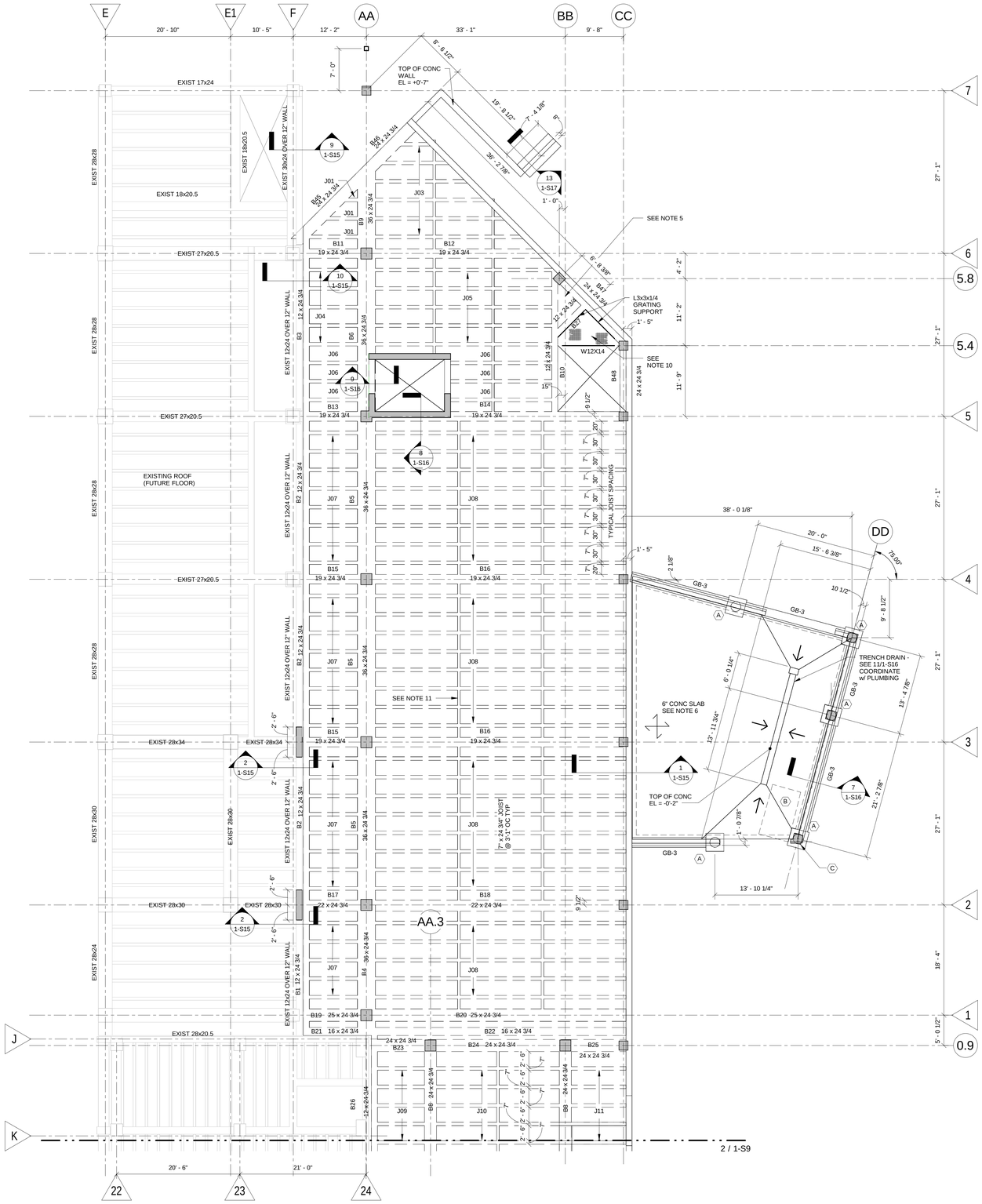

1 ZONE A
1/8" = 1'-0"

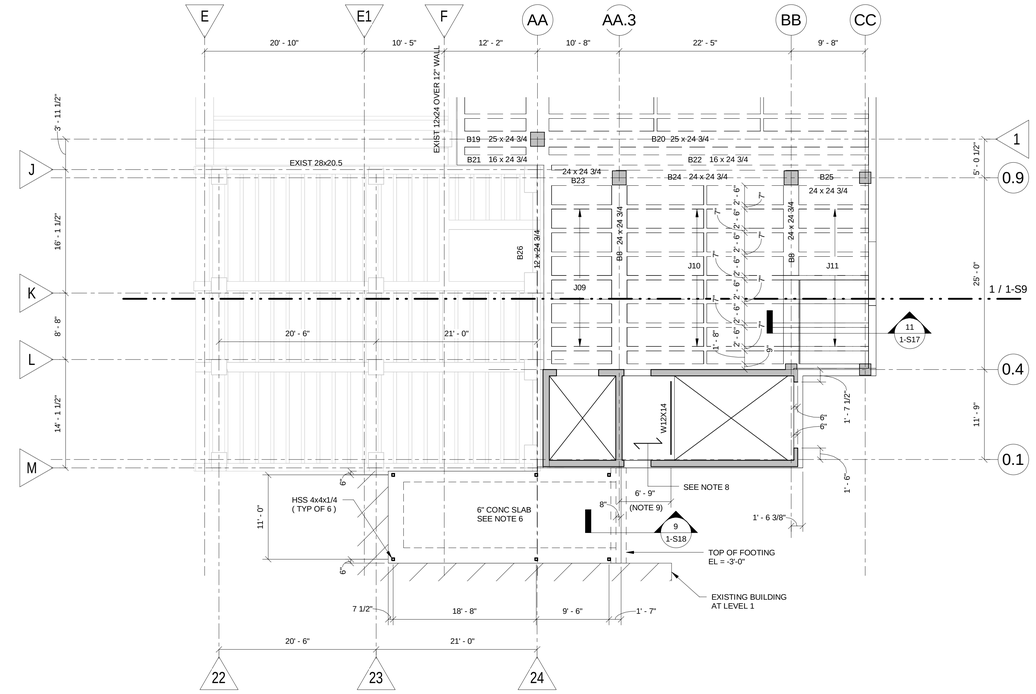

2 ZONE B
1/8" = 1'-0"

NOTES :

1. SEE SHEET 1-S1 FOR GENERAL NOTES.
2. REVIEW STRUCTURAL DETAIL SHEETS FOR TYPICAL DETAILS FOR THIS PROJECT. TYPICAL DETAILS ARE NOT NECESSARILY CUT ON THE PLAN SHEETS.
3. 4 3/4" CONCRETE SLAB - TYP UNO. REINF w/ # 4 @ 12" OC EA WAY.
4. TOP OF SLAB EL = 0'-0" UNO.
5. 6" CAST-IN-PLACE CONCRETE SLAB w/ #4 AT 12" OC EA WAY TOP & BOTTOM.
6. 6" CONCRETE SLAB-ON-GRADE REINF w/ #3 AT 16" OC EA WAY - SUPPORT ON DOBIES.
7. SEE DETAIL 9/1-S7 FOR ADDITIONAL SLAB REINFORCEMENT AT CORNERS.
8. 4" COMPOSITE SLAB - 2 1/2" NORMAL WT CONCRETE + 1 1/2" COMPOSITE 18 GA METAL DECK REINF w/ 6x6 - W21x21 (FLAT SHEETS).
9. DIMENSION TO BE COORDINATED w/ REVIEWED SHOP DRAWINGS AND CALCULATIONS FOR PRE-ENGINEERED, PRE-FABRICATED METAL PAN STAIRS.
10. 1 1/2" x 3/16" GALV STEEL BAR GRATING. COORDINATE LOCATION W/ MECHANICAL. SEE DETAIL 13/1-S16 FOR SUPPORT.
11. DISTRIBUTION RIB - SEE 2/1-S24.

KEYED NOTES :

A. TOP OF CAISSON CAP EL = -2'-0"
TOP OF CAISSON EL = -4'-9"

B. EXISTING UTILITY VAULT TO REMAIN

C. SEE 3/1-S23 FOR COLUMN INFO

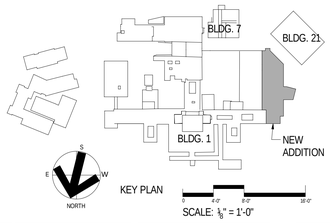

Revisions	Date	Revisions	Date	Revisions	Date

VA FORM 08-6231, FEB. 1983

HEERY design

Heery International Inc.
125 South Dubuque Street,
Suite 500,
Iowa City, IA 52240-4003
319.354.4700

project number
11-25503

Drawing Title
FLOOR FRAMING PLAN LEVEL 1, ZONE A AND B

CONSTRUCTION DOCUMENTS

Project Title
EXPAND BLDG. 1 FOR PACT AMBULATORY CARE, RADIOLOGY, EGRESS STAIRWELL

Building No. BLDG 1 | Checked CT | Drawn NS

Location
ICVA HEALTH CARE SYSTEM

Date **07/01/2014**

Project No. **636-201**

DRAWING NO. **1-S9**

Office of Facilities

Department of Veterans Affairs

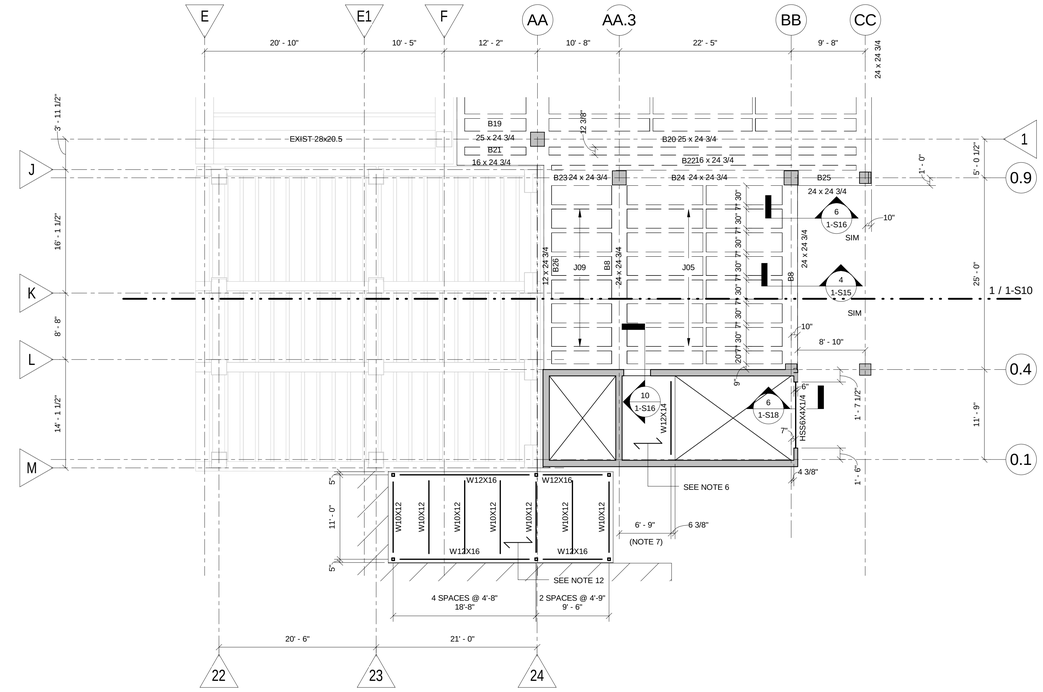

NOTES :

1. SEE SHEET 1-S1 FOR GENERAL NOTES.
2. REVIEW STRUCTURAL DETAIL SHEETS FOR TYPICAL DETAILS FOR THIS PROJECT. TYPICAL DETAILS ARE NOT NECESSARILY CUT ON THE PLAN SHEETS.
3. 4 3/4" CONCRETE SLAB - TYP UNO. REINF w/ #4 @ 12" OC EA WAY.
4. TOP OF SLAB EL = 14'-0" UNO.
5. 6" CAST-IN-PLACE CONCRETE SLAB w/ #4 AT 12" OC EA WAY TOP & BOTTOM.
6. 4" COMPOSITE SLAB - 2 1/2" NORMAL WT CONCRETE + 1 1/2" COMPOSITE 18 GA METAL DECK REINF w/ 6x6-W2.1xW2.1 (FLAT SHEETS).
7. DIMENSION TO BE COORDINATED w/ REVIEWED SHOP DRAWINGS AND CALCULATIONS FOR PRE-ENGINEERED, PRE-FABRICATED METAL PAN STAIRS.
8. 6" COMPOSITE SLAB - 4" NORMAL WEIGHT CONCRETE + 2" COMPOSITE 18 GA METAL DECK REINF w/ 6x6 - W2.1xW2.1 (FLAT SHEETS).
9. ROOF DRAIN LOCATIONS. COORDINATE w/ ARCH. DRAINS SHALL NOT BE PLACED DIRECTLY OVER STRUCTURAL BEAMS.
10. 1 1/2"x3/16" GALV STEEL BAR GRATING. COORDINATE LOCATION WITH MECHANICAL. SEE DETAIL 13/1-S16 FOR SUPPORT.
11. DISTRIBUTION RIB - SEE 2/1-S24.
12. 1 1/2", 18 GA, TYPE 'B" ROOF DECK (GALV) ATTACH w/ 4-#10 TEK SCREWS AT SIDELAPS AND 5/8" PUDDLE WELDS AT SUPPORTS (36/4 PATTERN).

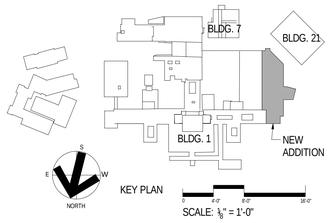

Revisions	Date	Revisions	Date	Revisions	Date

HEERY design

Heery International Inc.
125 South Dubuque Street,
Suite 500,
Iowa City, IA 52240-4003
319.354.4700

project number
11-25503

Drawing Title
FLOOR AND ROOF FRAMING PLAN LEVEL 2, ZONE A AND B

CONSTRUCTION DOCUMENTS

Project Title
EXPAND BLDG. 1 FOR PACT AMBULATORY CARE, RADIOLOGY, EGRESS STAIRWELL

Building No. BLDG 1 | Checked CT | Drawn NS

Location
ICVA HEALTH CARE SYSTEM

Date **07/01/2014**

Project No. **636-201**

DRAWING NO. **1-S10**

Office of Facilities

Department of Veterans Affairs

VA FORM 08-6231, FEB. 1983

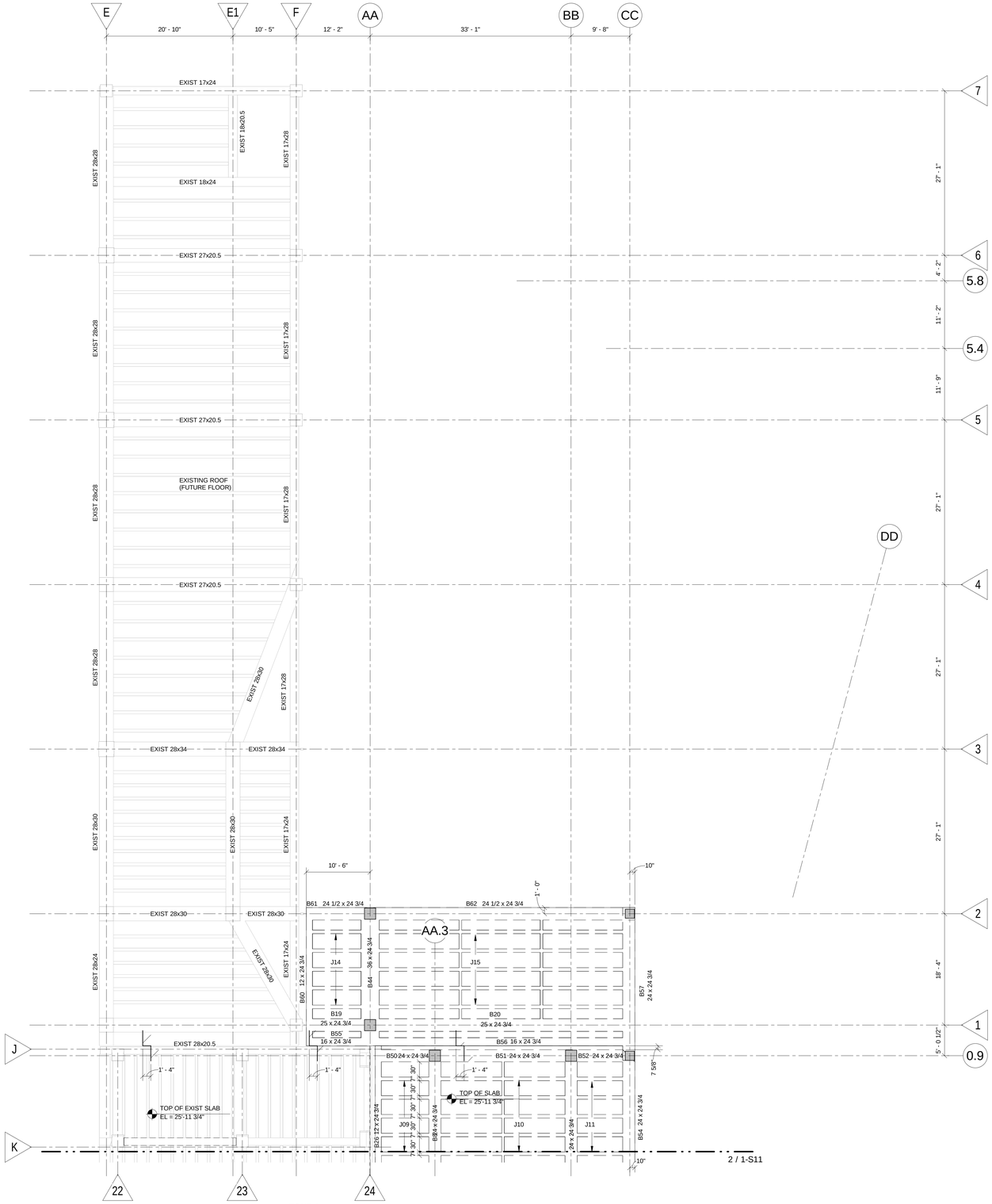

1 ZONE A
1/8" = 1'-0"

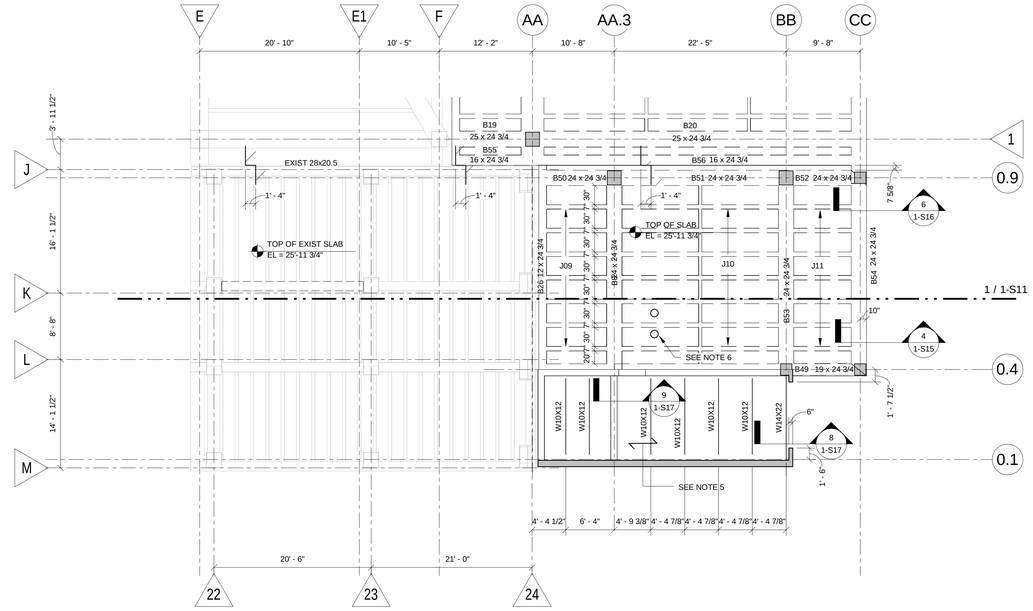

2 ZONE B
1/8" = 1'-0"

NOTES :

1. SEE SHEET 1-S1 FOR GENERAL NOTES.
2. REVIEW STRUCTURAL DETAIL SHEETS FOR TYPICAL DETAILS FOR THIS PROJECT. TYPICAL DETAILS ARE NOT NECESSARILY CUT ON THE PLAN SHEETS.
3. 4 3/4" CONCRETE SLAB - TYP UNO. REINF w/ # 4 @ 12" OC EA WAY.
4. TOP OF SLAB EL = 27'- 3 3/4" UNO.
5. 1 1/2" - 18 GA TYPE "B" (WIDE RIB) METAL DECK (GALV). ATTACH w/ 4 - #10 TEK SCREWS AT SIDELAPS AND 5/8" PUDDLE WELDS AT SUPPORTS (36/4 PATTERN).
6. ROOF DRAIN LOCATIONS. COORDINATE w/ ARCH. DRAINS SHALL NOT BE PLACED DIRECTLY OVER STRUCTURAL BEAMS.

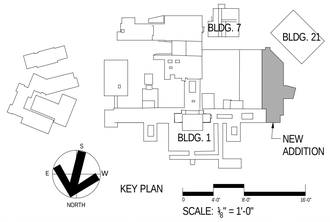

KEY PLAN

SCALE: 1/8" = 1'-0"

Revisions	Date	Revisions	Date	Revisions	Date

HEERY design

Heery International Inc.
125 South Dubuque Street,
Suite 500,
Iowa City, IA 52240-4003
319.354.4700

project number
11-25503

Drawing Title
ROOF FRAMING PLAN LEVEL 3, ZONE A AND B

CONSTRUCTION DOCUMENTS

Project Title
EXPAND BLDG. 1 FOR PACT AMBULATORY CARE, RADIOLOGY, EGRESS STAIRWELL

Building No. BLDG 1 | Checked CT | Drawn NS

Location
ICVA HEALTH CARE SYSTEM

Date **07/01/2014**

Project No. **636-201**

DRAWING NO. **1-S11**

Office of Facilities

Department of Veterans Affairs

VA FORM 08-6231, FEB. 1983

1 ZONE A
1/8" = 1'-0"

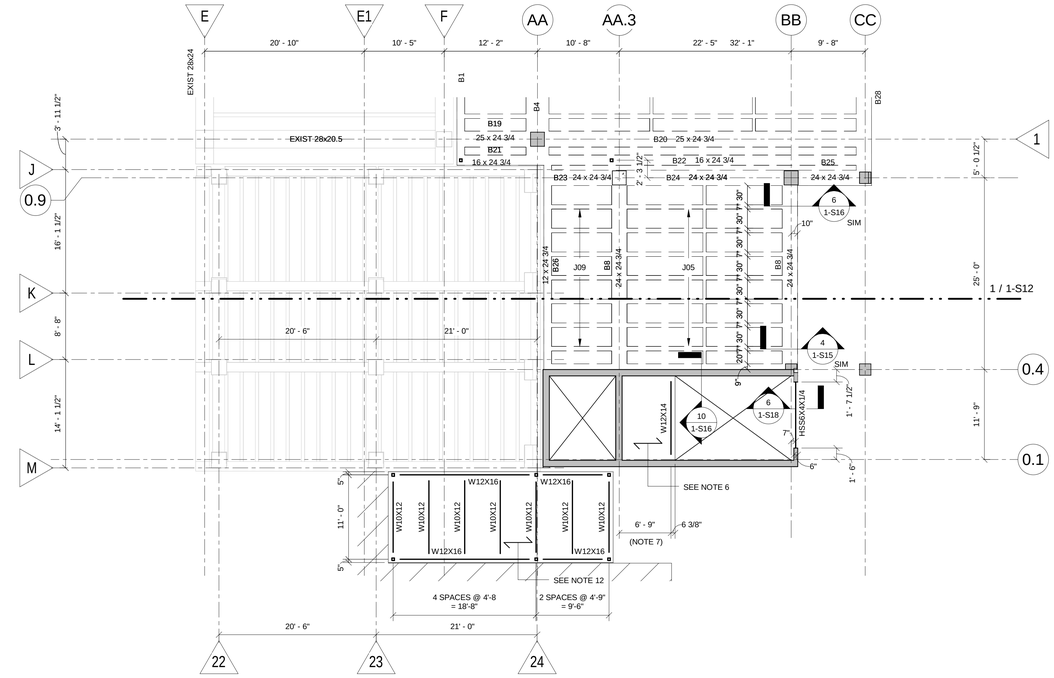

2 ZONE B
1/8" = 1'-0"

NOTES :

1. SEE SHEET 1-S1 FOR GENERAL NOTES.
2. REVIEW STRUCTURAL DETAIL SHEETS FOR TYPICAL DETAILS FOR THIS PROJECT. TYPICAL DETAILS ARE NOT NECESSARILY CUT ON THE PLAN SHEETS.
3. 4 3/4" CONCRETE SLAB - TYP UNO. REINF w/ #4 @ 12" OC EA WAY.
4. TOP OF SLAB EL = 14'-0" UNO.
5. 6" CAST-IN-PLACE CONCRETE SLAB w/ #4 AT 12" OC EA WAY TOP & BOTTOM.
6. 4" COMPOSITE SLAB - 2 1/2" NORMAL WT CONCRETE + 1 1/2" COMPOSITE 18 GA METAL DECK REINF w/ 6x6-W2.1xW2.1 (FLAT SHEETS).
7. DIMENSION TO BE COORDINATED w/ REVIEWED SHOP DRAWINGS AND CALCULATIONS FOR PRE-ENGINEERED, PRE-FABRICATED METAL PAN STAIRS.
8. 6" COMPOSITE SLAB - 4" NORMAL WEIGHT CONCRETE + 2" COMPOSITE 18 GA METAL DECK REINF w/ 6x6 - W2.1xW2.1 (FLAT SHEETS).
9. ROOF DRAIN LOCATIONS. COORDINATE w/ ARCH. DRAINS SHALL NOT BE PLACED DIRECTLY ABOVE STRUCTURAL BEAMS.
10. 1 1/2"x3/16" GALV STEEL BAR GRATING. COORDINATE LOCATION WITH MECHANICAL. SEE DETAIL 13/1-S16 FOR SUPPORT.
11. 1 1/2", 18 GA, TYPE "B" ROOF DECK (GALV) ATTACH w/ 4-#10 TEK SCREWS AT SIDELAPS AND 5/8" PUDDLE WELDS AT SUPPORTS (36/4 PATTERN).

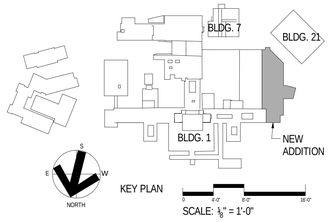

Revisions	Date	Revisions	Date	Revisions	Date

HEERY design

Heery International Inc.
125 South Dubuque Street,
Suite 500,
Iowa City, IA 52240-4003
319.354.4700

project number
11-25503

Drawing Title
FLOOR AND ROOF FRAMING PLAN LEVEL 2, ZONE A AND B, ALTERNATE 4

CONSTRUCTION DOCUMENTS

Project Title
EXPAND BLDG. 1 FOR PACT AMBULATORY CARE, RADIOLOGY, EGRESS STAIRWELL

Building No. BLDG 1 | Checked CT | Drawn NS

Location
ICVA HEALTH CARE SYSTEM

Date **07/01/2014**

Project No. **636-201**

DRAWING NO. **1-S12**

Office of Facilities

Department of Veterans Affairs

VA FORM 08-6231, FEB. 1983

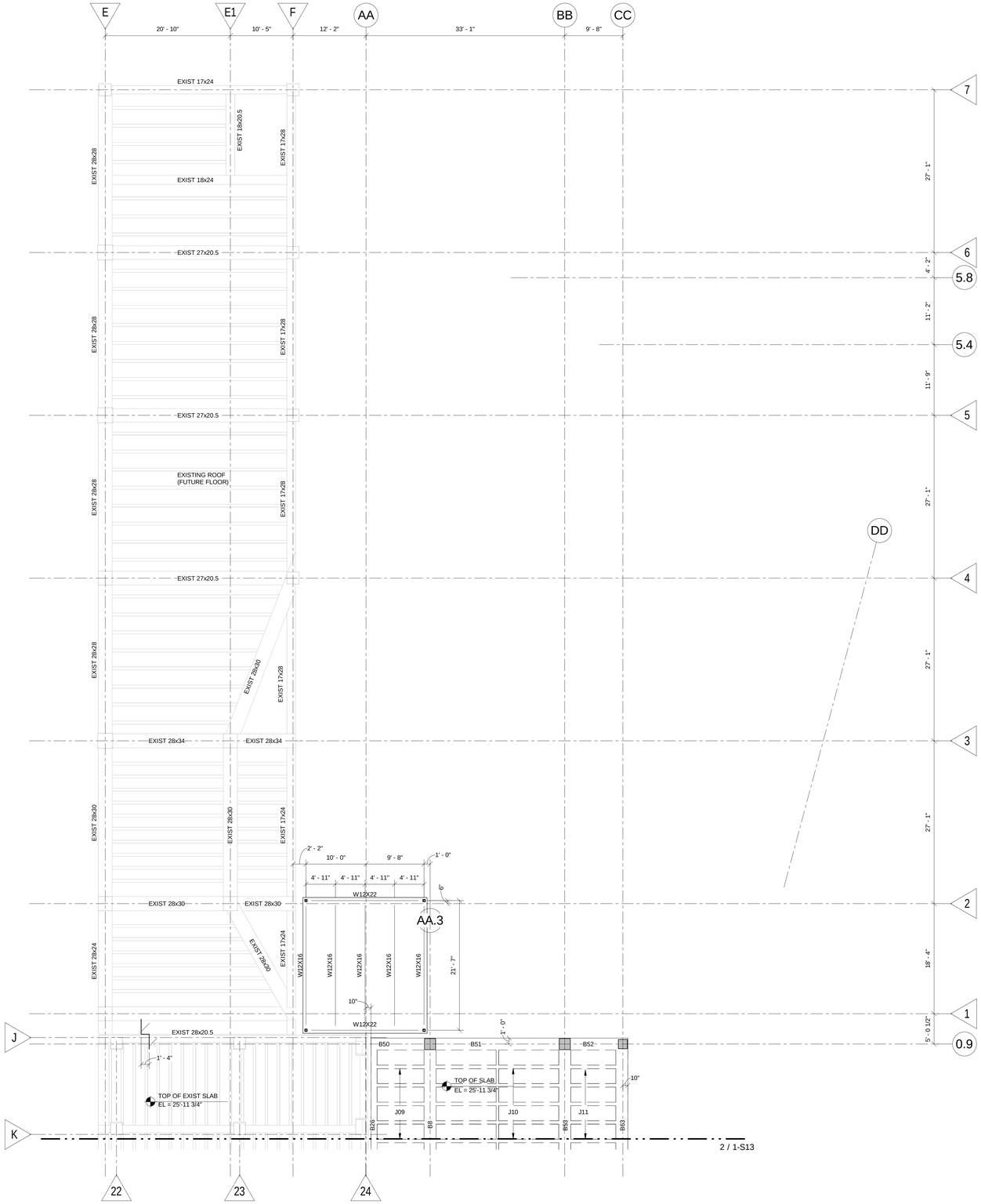

1 ZONE A
1/8" = 1'-0"

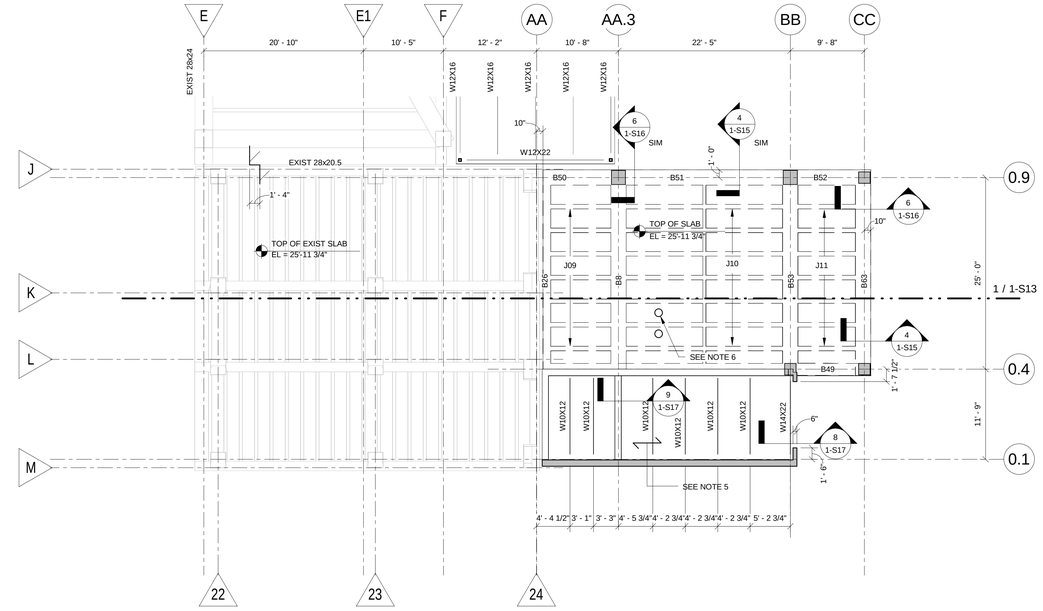

2 ZONE B
1/8" = 1'-0"

NOTES :

1. SEE SHEET 1-S1 FOR GENERAL NOTES.
2. REVIEW STRUCTURAL DETAIL SHEETS FOR TYPICAL DETAILS FOR THIS PROJECT. TYPICAL DETAILS ARE NOT NECESSARILY CUT ON THE PLAN SHEETS.
3. 4 3/4" CONCRETE SLAB - TYP UNO. REINF w/ #4 @ 12" OC EA WAY.
4. TOP OF SLAB EL = 27'-3 3/4" UNO.
5. 1 1/2" - 18 GA TYPE "B" (WIDE RIB) METAL DECK (GALV). ATTACH w/ 4 - #10 TEK SCREWS AT SIDELAPS AND 5/8" PUDDLE WELDS AT SUPPORTS (36/4 PATTERN).
6. ROOF DRAIN LOCATIONS. COORDINATE w/ ARCH. DRAINS SHALL NOT BE PLACED DIRECTLY ABOVE STRUCTURAL BEAMS.

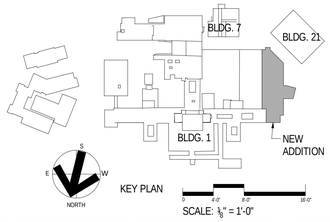

Revisions	Date	Revisions	Date	Revisions	Date

HEERY design

Heery International Inc.
125 South Dubuque Street,
Suite 500,
Iowa City, IA 52240-4003
319.354.4700

project number
11-25503

Drawing Title
ROOF FRAMING PLAN LEVEL 3, ZONE A AND B, ALTERNATE 4

CONSTRUCTION DOCUMENTS

Project Title
EXPAND BLDG. 1 FOR PACT AMBULATORY CARE, RADIOLOGY, EGRESS STAIRWELL

Building No. BLDG 1 | Checked CT | Drawn NS

Location
ICVA HEALTH CARE SYSTEM

Date **07/01/2014**

Project No. **636-201**

DRAWING NO. **1-S13**

Office of Facilities

Department of Veterans Affairs

VA FORM 08-6231, FEB. 1983

1 ZONE A
1/8" = 1'-0"

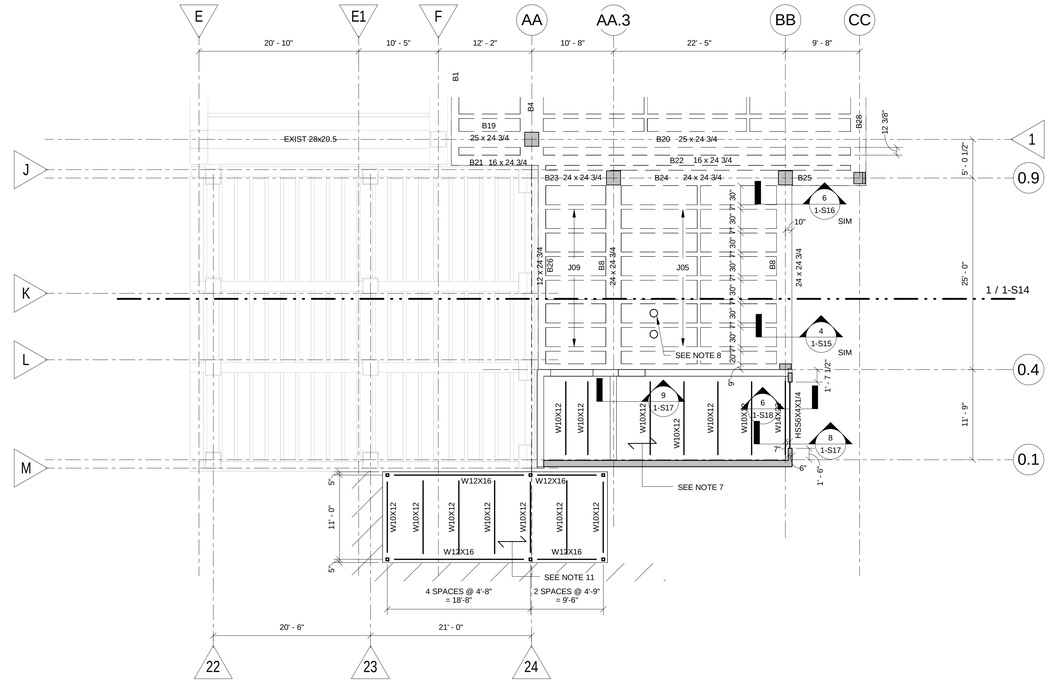

2 ZONE B
1/8" = 1'-0"

NOTES :

1. SEE SHEET 1-S1 FOR GENERAL NOTES.
2. REVIEW STRUCTURAL DETAIL SHEETS FOR TYPICAL DETAILS FOR THIS PROJECT. TYPICAL DETAILS ARE NOT NECESSARILY CUT ON THE PLAN SHEETS.
3. 4 3/4" CONCRETE SLAB - TYP UNO. REINF w/ #4 @ 12" OC EA WAY.
4. TOP OF SLAB EL = 14'-0" UNO.
5. 6" CAST-IN-PLACE CONCRETE SLAB w/ #4 AT 12" OC EA WAY TOP & BOTTOM.
6. 6" COMPOSITE SLAB - 4" NORMAL WEIGHT CONCRETE + 2" COMPOSITE 18 GA METAL DECK REINF w/ 6x6 - W2.1xW2.1 (FLAT SHEETS).
7. 1 1/2" - 20 GA TYPE "B" (WIDE RIB) METAL DECK, ATTACH w/ 4 - #10 TEK SCREWS AT SIDELAPS AND 5/8" PUDDLE WELDS AT SUPPORTS (36/4 PATTERN).
8. ROOF DRAIN LOCATIONS. COORDINATE w/ ARCH. DRAINS SHALL NOT BE PLACED DIRECTLY ABOVE STRUCTURAL BEAMS.
9. 1 1/2"x3/16" GALV STEEL BAR GRATING. COORDINATE LOCATION WITH MECHANICAL. SEE DETAIL 13/1-S16 FOR SUPPORT.
10. DISTIRBUTION RIB - SEE 2/1-S24.
11. 1 1/2", 18 GA, TYPE "B" ROOF DECK (GALV) ATTACH w/ 4-#10 TEK SCREWS AT SIDELAPS AND 5/8" PUDDLE WELDS AT SUPPORTS (36/4 PATTERN).

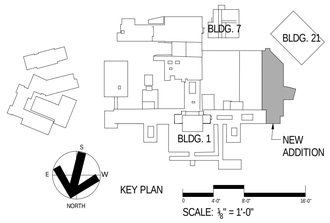

Revisions	Date	Revisions	Date	Revisions	Date

HEERY design

Heery International Inc.
125 South Dubuque Street,
Suite 500,
Iowa City, IA 52240-4003
319.354.4700

project number
11-25503

Drawing Title
ROOF FRAMING PLAN LEVEL 2, ZONE A AND B, ALTERNATE 5

CONSTRUCTION DOCUMENTS

Project Title
EXPAND BLDG. 1 FOR PACT AMBULATORY CARE, RADIOLOGY, EGRESS STAIRWELL

Building No. BLDG 1 | Checked CT | Drawn NS

Location
ICVA HEALTH CARE SYSTEM

Date
07/01/2014

Project No.
636-201

DRAWING NO.
1-S14

Office of Facilities

Department of Veterans Affairs

VA FORM 08-6231, FEB. 1983

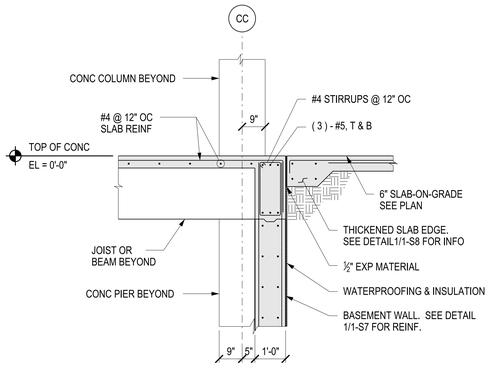

1 DETAIL

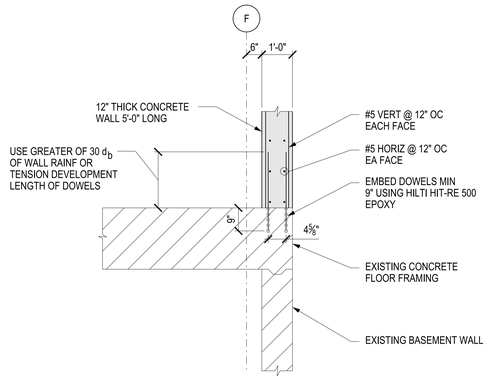

2 DETAIL

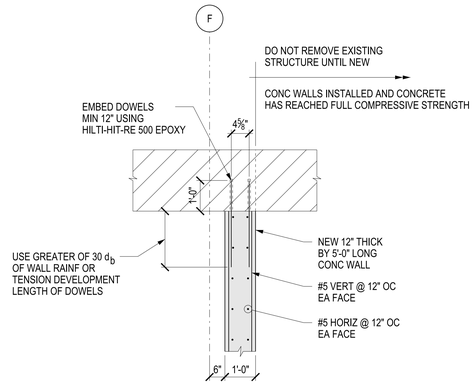

3 DETAIL

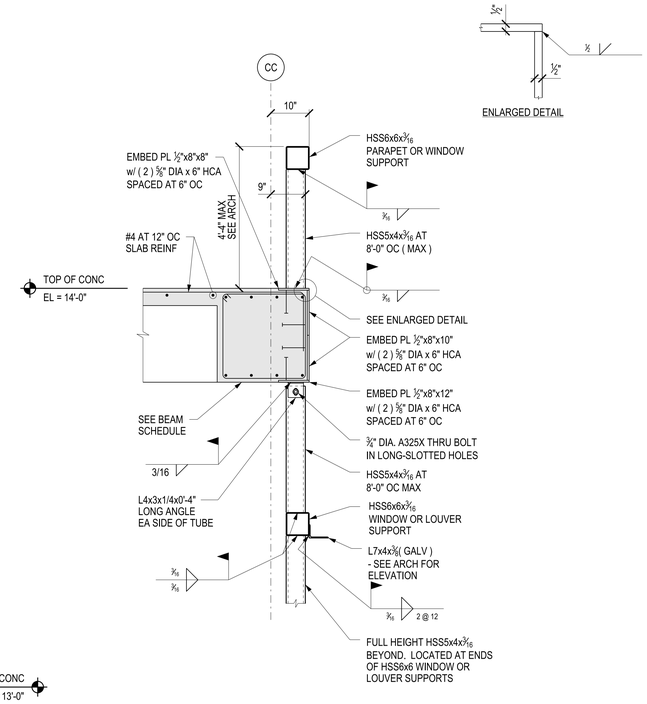

4 DETAIL AT WINDOW AND LOUVER SUPPORT

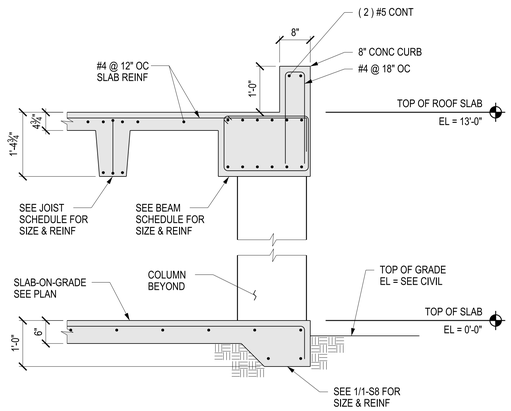

5 SECTION AT GARAGE EXTERIOR

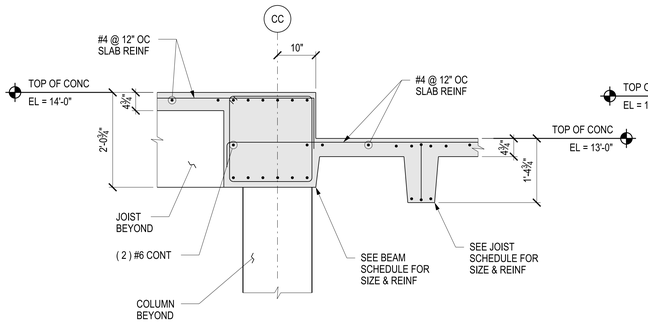

6 DETAIL AT GARAGE ROOF STEP DOWN

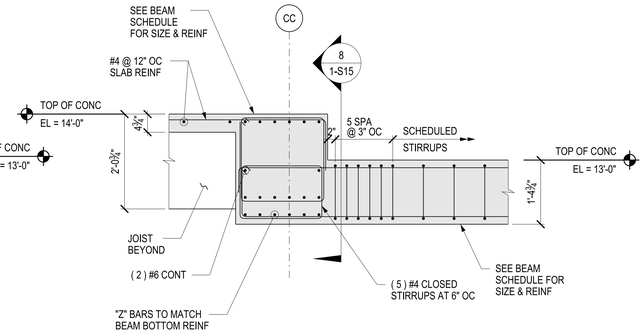

7 DETAIL AT GARAGE ROOF BEAM

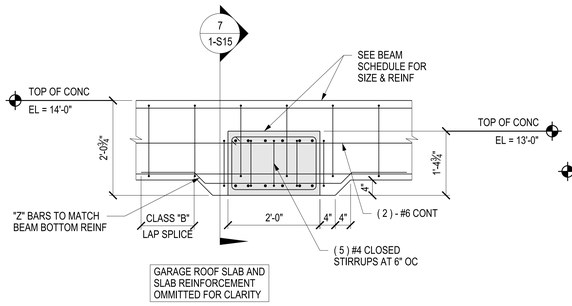

8 DETAIL AT GARAGE ROOF BEAM

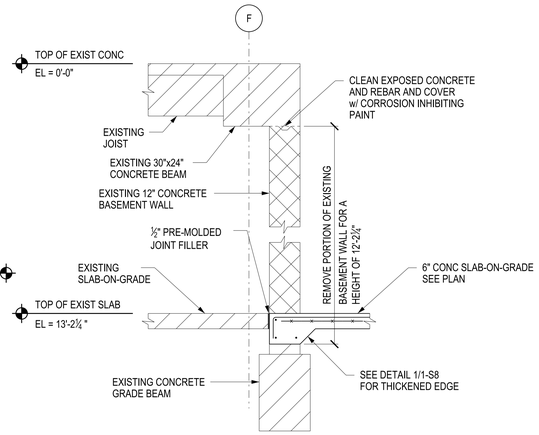

9 FULL BAY WALL REMOVAL DETAIL

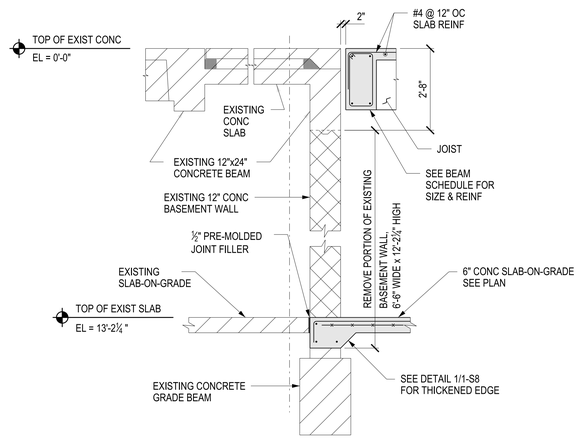

10 CORRIDOR OPENING WALL REMOVAL DETAIL

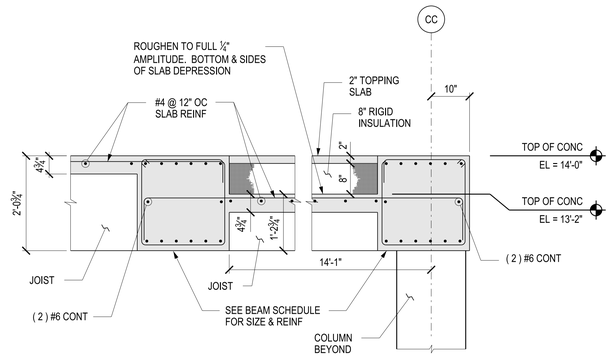

11 SECTION AT SLAB DEPRESSION FOR FUTURE MRI INSTALLATION

Revisions	Date	Revisions	Date	Revisions	Date

HEERY design

Heery International Inc.
125 South Dubuque Street,
Suite 500,
Iowa City, IA 52240-4003
319.354.4700

project number
11-25503

Drawing Title
DETAILS

CONSTRUCTION DOCUMENTS

Project Title
EXPAND BLDG. 1 FOR PACT AMBULATORY CARE, RADIOLOGY, EGRESS STAIRWELL

Building No. BLDG 1 | Checked CT | Drawn NS

Location
ICVA HEALTH CARE SYSTEM

Date 07/01/2014

Project No. 636-201

DRAWING NO. 1-S15

Office of Facilities

Department of Veterans Affairs

VA FORM 08-6231, FEB. 1983

PROJECT: IC-VAMC-EXPAND BLDG. 1 FOR PACT PROJECT
SHEET TITLE: S:\MCS\00024\Mem\10\1020600_CADD\1-S15-1020600-IAC.dgn
DATE: 7/3/2014
PLOTTED BY: Craig Taylor
PEN TABLE FILE: PLOT-SS\structural\ft.pen

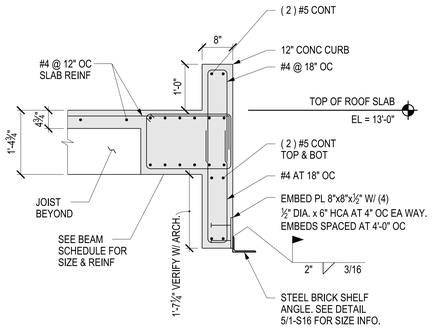

1 DETAIL AT OVERHEAD GARAGE DOOR

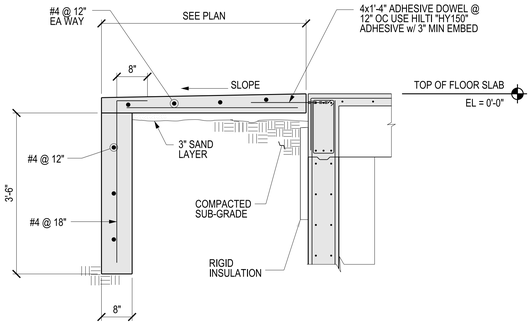

2 STOOP DETAIL

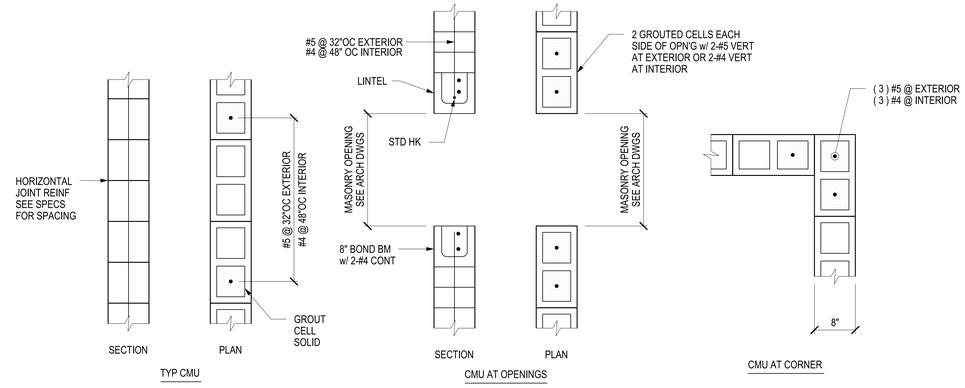

3 TYP CMU REINFORCING DETAILS

CMU CONTROL JOINT SCHEDULE

	MAXIMUM CONTROL JOINT SPACING (FT)		
HORIZONTAL JOINT REINF SPACING (IN)	NONE	16"	8"
EXTERIOR	20'-0"	26'-0"	32'-0"
INTERIOR	26'-0"	32'-0"	36'-0"

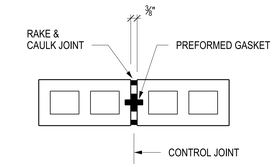

4 CMU CONTROL JOINT SCHEDULE

MASONRY LINTEL SCHEDULE
PARTITIONS AND WALLS

MAX CLR OPENING	NOMINAL DEPTH	NOMINAL WIDTH 6"	8"	10"	12"
4'-0"	8"		2-#4		2-#5
6'-0"	8"		2-#5		2-#5
8'-0"	1'-4"		4-#5		4-#5

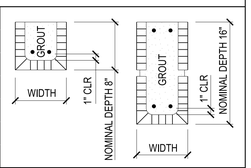

BRICK LINTEL SCHEDULE

MAX CLR OPENING	STEEL LINTEL 4"			
4'-0"	L 5"x3½"x¼"			
6'-0"	L 5"x3½"x¼"			
8'-0"	L 5"x5"x5/16"			

5 MASONRY LINTEL SCHEDULE (8'-0" OPNG MAX)

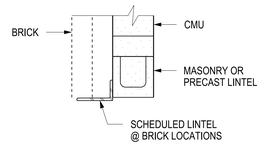

NOTES :

1. LINTELS ARE TO SUPPORT MASONRY WALL LOADS ONLY. NOTIFY ARCHITECT FOR LINTEL REQUIREMENTS TO CARRY ANY SUPERIMPOSED LOADS.
2. MINIMUM GROUT 28 DAY STRENGTH TO BE 2,000 PSI.
3. MINIMUM BEARING EACH END : 8"
4. STEEL BRICK LINTELS TO BE LLH (UNO).
5. LENGTH OF BRICK LINTEL TO MATCH LENGTH OF WALL LINTEL.
6. PRECAST LINTELS MAY BE SUBSTITUTED FOR MASONRY LINTELS.
7. STEEL BRICK LINTELS TO BE GALVANIZED.

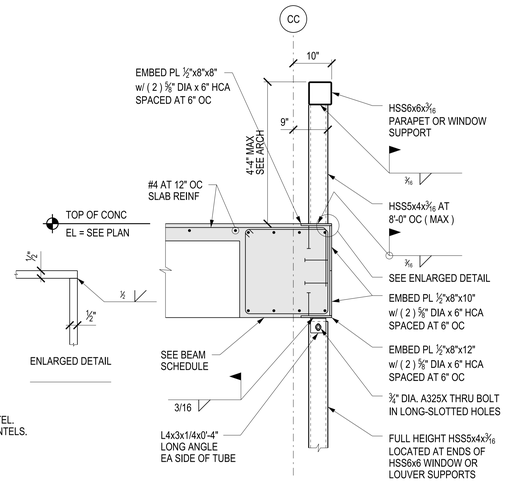

6 DETAIL AT WINDOW AND LOUVER SUPPORT

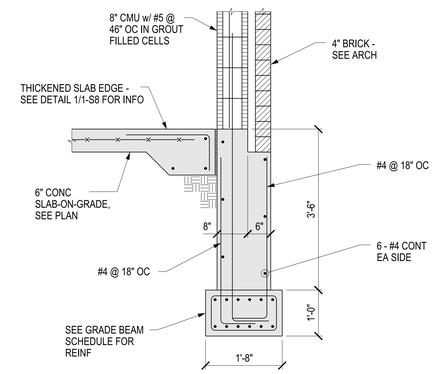

7 SECTION AT FROST WALL AT AMBULANCE GARAGE

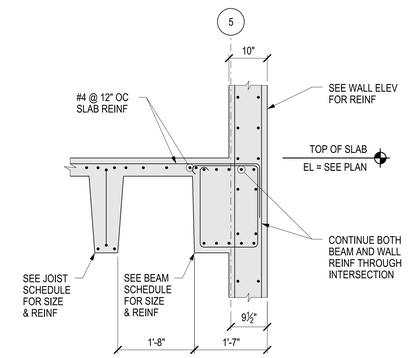

8 SECTION AT BEAM AND WALL INTERSECTION

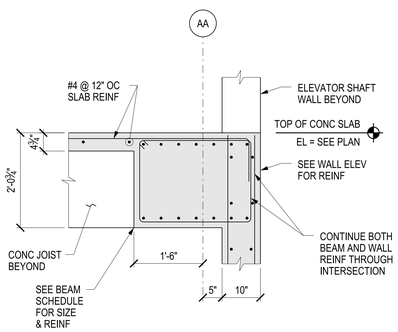

9 SECTION AT BEAM AND WALL INTERSECTION

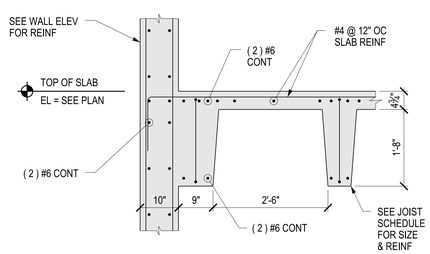

10 SECTION AT JOIST AND WALL ABUTMENT

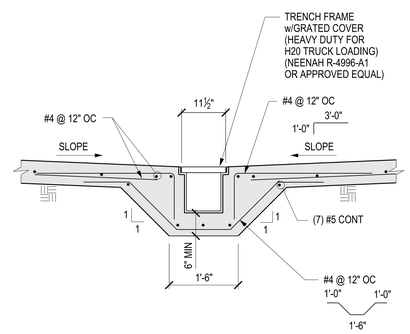

11 TRENCH

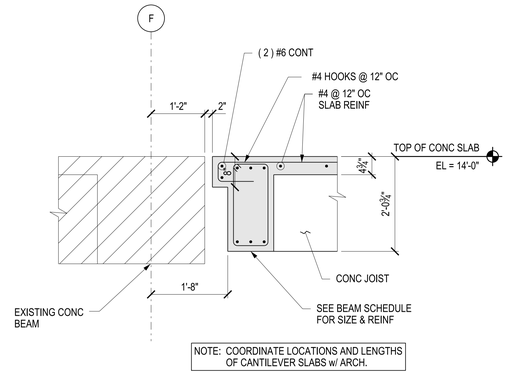

NOTE: COORDINATE LOCATIONS AND LENGTHS OF CANTILEVER SLABS w/ ARCH.

12 CANTILEVER SLAB AT EXIST BLDG DETAIL

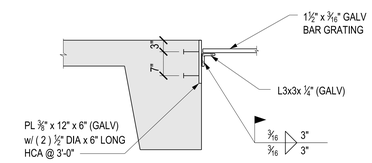

NOTE: ATTACH BAR GRATING TO SUPPORT ANGLE W/GALVANIZED HOLD DOWN CLIP - MINIMUM OF (2) CLIPS PER PANEL WIDTH.

13 BAR GRATING SUPPORT

Revisions	Date	Revisions	Date	Revisions	Date

HEERY design
Heery International Inc.
125 South Dubuque Street,
Suite 500,
Iowa City, IA 52240-4003
319.354.4700

project number 11-25503

Drawing Title: DETAILS

CONSTRUCTION DOCUMENTS

Project Title: EXPAND BLDG. 1 FOR PACT AMBULATORY CARE, RADIOLOGY, EGRESS STAIRWELL

Building No.: BLDG 1 | Checked: CT | Drawn: NS

Location: ICVA HEALTH CARE SYSTEM

Date: 07/01/2014

Project No.: 636-201

DRAWING NO. 1-S16

Office of Facilities

Department of Veterans Affairs

VA FORM 08-6231, FEB. 1983

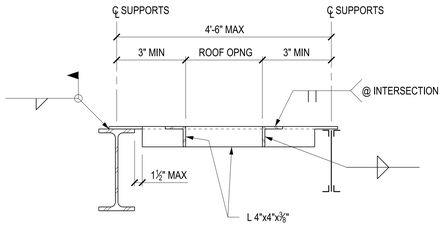

NOTES :
1. COORDINATE QUANTITY, LOCATION & OPENING SIZE WITH ARCH & MECH DWGS.
2. NOT REQUIRED AT OPENINGS LESS THAN 12" SQUARE.
3. PROVIDE FRAME AT EACH ROOF DRAIN LOCATION.

1 TYP FRAMED ROOF OPENING

NOTES :
1. CONNECTION SHOWN IS SCHEMATIC.
2. DESIGN OF CONNECTION TO BE PREFORMED BY STEEL FABRICATORS ENGINEER, PER SPECIFICATION SECTION 05120.
3. DESIGN CONNECTION FOR REACTIONS NOTED ON THE FRAMING PLAN. IF NO REACTION NOTED THAN DESIGN FOR 10 KIP MIN REACTION.

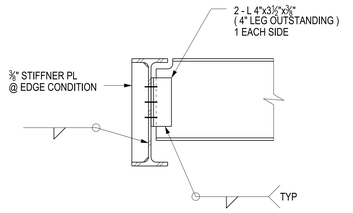

2 TYP BM TO BM CONNECTION

NOTES :
1. CONNECTION SHOWN IS SCHEMATIC.
2. DESIGN OF CONNECTION TO BE PREFORMED BY STEEL FABRICATORS ENGINEER, PER SPECIFICATION SECTION 05120.
3. DESIGN CONNECTION FOR REACTIONS NOTED ON THE FRAMING PLAN. IF NO REACTION NOTED THAN DESIGN FOR 10 KIP MIN REACTION.

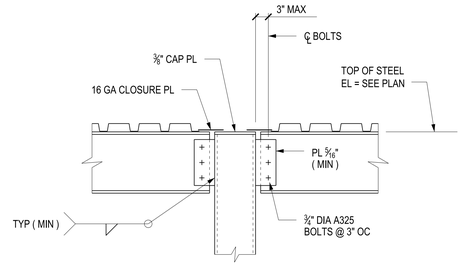

3 TYP BEAM CONNECTION AT TOP OF TUBE COLUMN

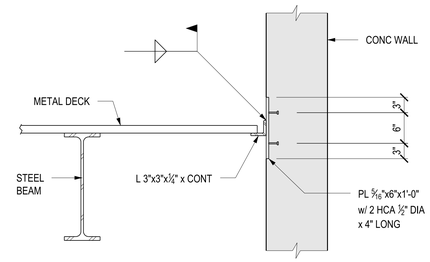

4 TYP DECK CONNECTION AT CONCRETE WALL

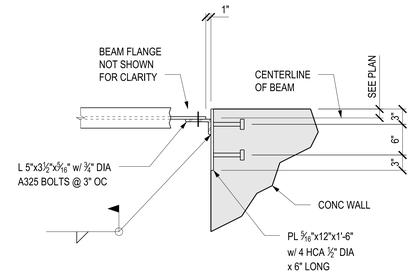

5 TYP STEEL BEAM CONNECTION AT CONCRETE WALL CORNER

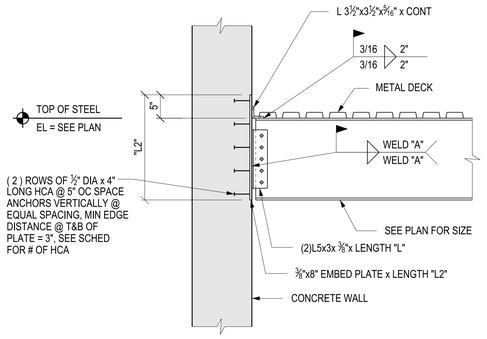

6 TYP STEEL BEAM CONN @ 8" TO 12" CONC WALL

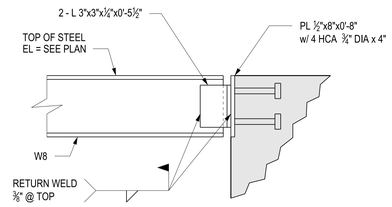

7 TYP ELEVATOR GUIDE RAIL CONNECTION TO CONCRETE

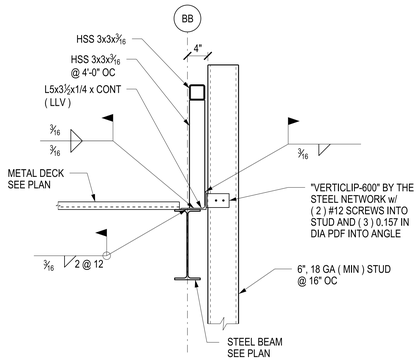

8 SECTION AT STAIRWELL ROOF

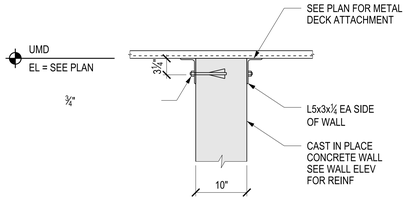

9 METAL DECK SUPPORT AT CONCRETE WALL

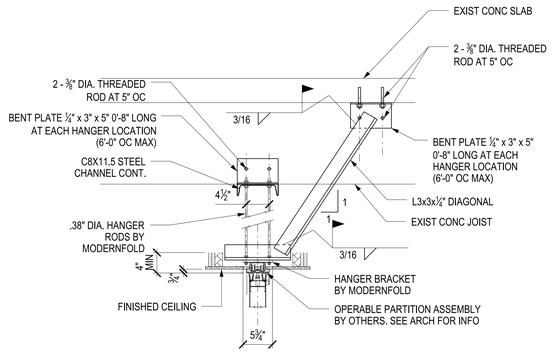

10 SUPPORT DETAIL AT MOVEABLE PARTITION

NOTE: SEE ARCH SECTION 8/1-A21 FOR MORE INFO AND PLAN LOCATIONS

SCHEDULE					
BM	# BOLTS	PLATE LENGTH "L"	WELD "A"	PLATE LENGTH "L2"	# HCA
W8 W10	2	0'-6"	3/16	1'-3"	6
W12 W14	3	0'-9"	¼	1'-7"	8
W16	4	1'-0"	¼	1'-9"	10
W18	5	1'-3"	¼	2'-0"	10
W21	6	1'-6"	¼	2'-3"	10
W24 W27	7	1'-9"	¼	2'-8"	10

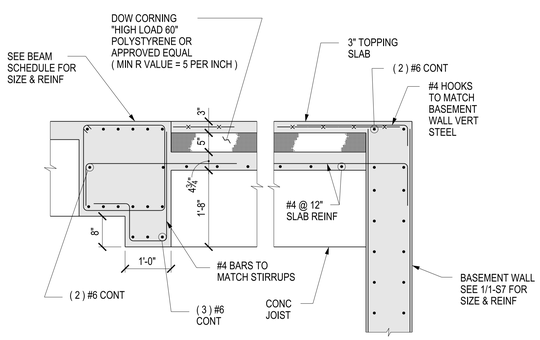

11 SECTION AT DROPPED SLAB

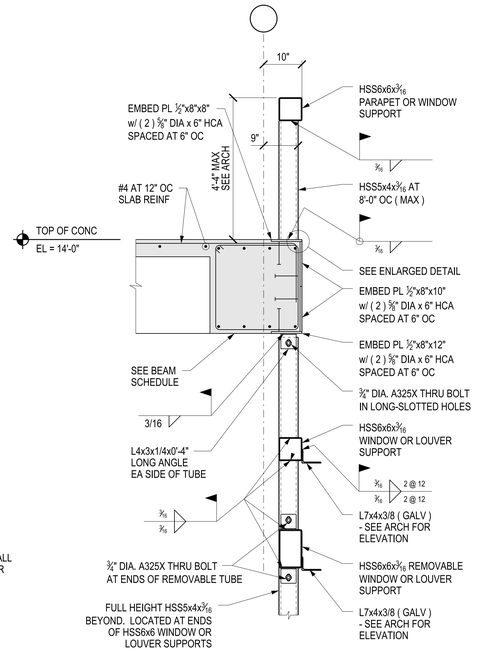

12 DETAIL AT WINDOW AND LOUVER SUPPORT

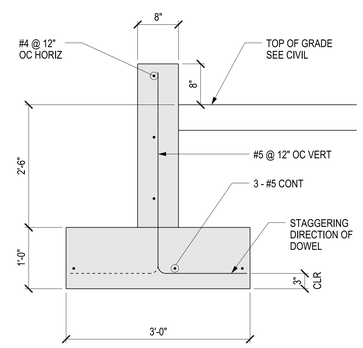

13 LOW SITE WALL FOUNDATION

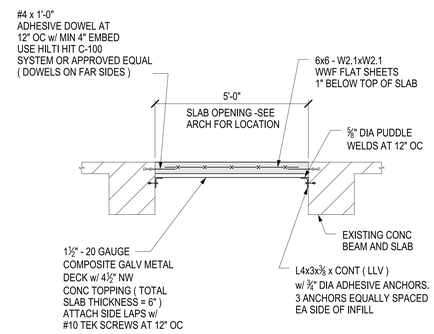

14 EXISTING DUMBWAITER OPENING INFILL

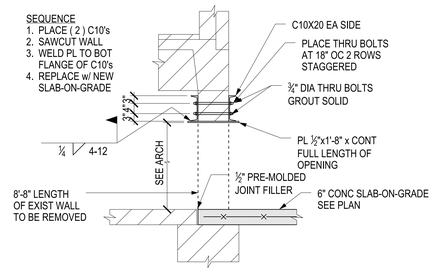

15 EXISTING WALL REMOVAL DETAIL

Revisions	Date	Revisions	Date	Revisions	Date

HEERY design
Heery International Inc.
125 South Dubuque Street,
Suite 500,
Iowa City, IA 52240-4003
319.354.4700

project number 11-25503

Drawing Title: DETAILS

CONSTRUCTION DOCUMENTS

Project Title: EXPAND BLDG. 1 FOR PACT AMBULATORY CARE, RADIOLOGY, EGRESS STAIRWELL

Building No.: BLDG 1 | Checked: CT | Drawn: NS

Location: ICVA HEALTH CARE SYSTEM

Date: 07/01/2014

Project No.: 636-201

DRAWING NO. 1-S17

Office of Facilities

Department of Veterans Affairs

VA FORM 08-6231, FEB. 1983

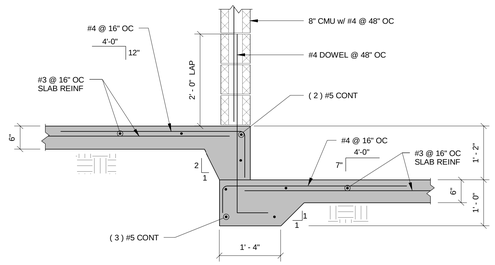

1 DETAIL
3/4" = 1'-0"

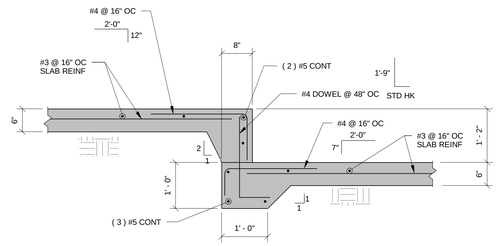

2 DETAIL
3/4" = 1'-0"

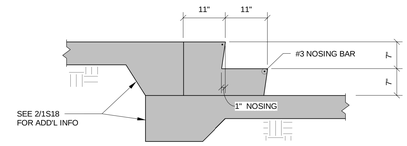

3 CONCRETE STAIR @ BASEMENT
3/4" = 1'-0"

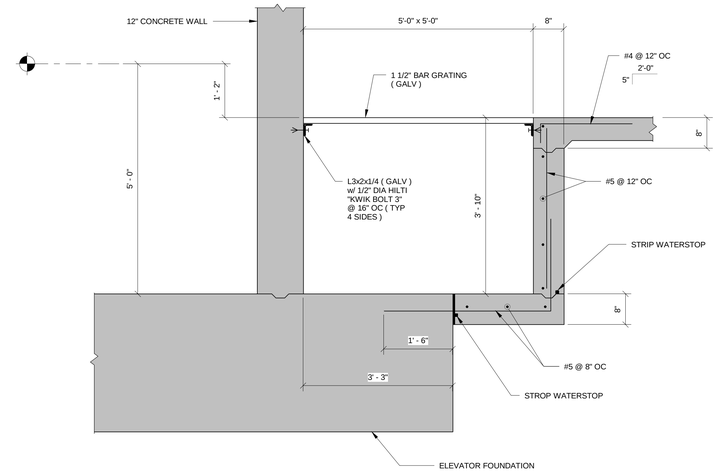

4 CONDENSATE PUMP PIT DETAIL
3/4" = 1'-0"

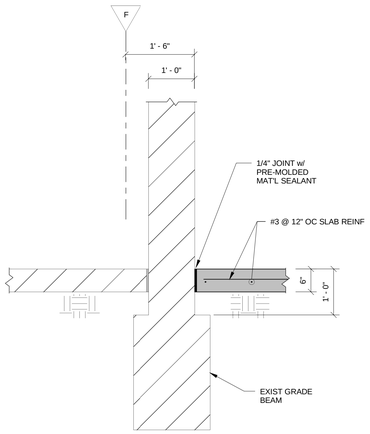

5 DETAIL
3/4" = 1'-0"

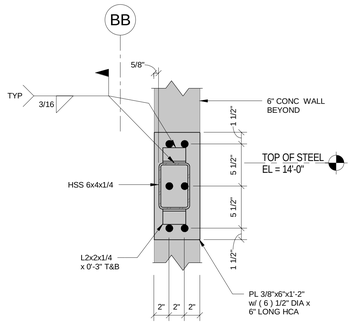

6 TUBE TO WALL CONN
1 1/2" = 1'-0"

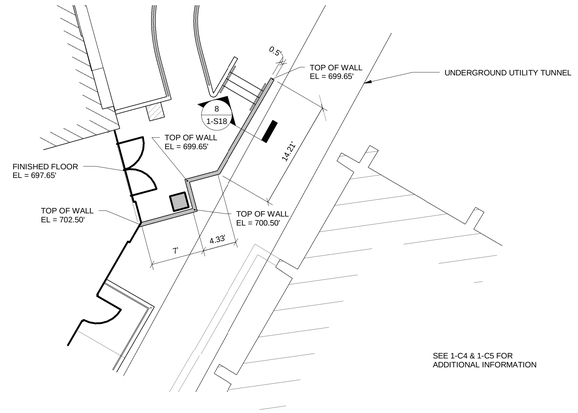

7 PARTIAL SITE WALL PLAN
1/8" = 1'-0"

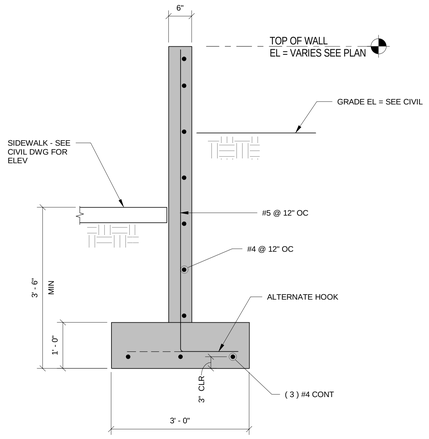

8 SITE WALL SECTION
3/4" = 1'-0"

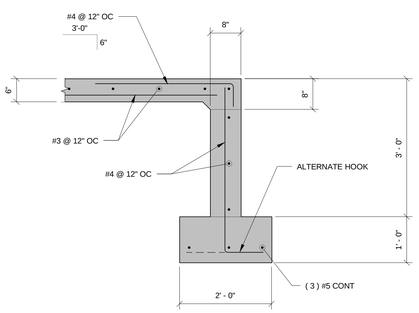

9 WALL FOOTING DETAIL
3/4" = 1'-0"

Revisions	Date	Revisions	Date	Revisions	Date

HEERY design

Heery International Inc.
125 South Dubuque Street,
Suite 500,
Iowa City, IA 52240-4003
319.354.4700

project number
11-25503

Drawing Title
DETAILS

CONSTRUCTION DOCUMENTS

Project Title
EXPAND BLDG. 1 FOR PACT AMBULATORY CARE, RADIOLOGY, EGRESS STAIRWELL

Building No. BLDG 1
Checked CT
Drawn NS

Location
ICVA HEALTH CARE SYSTEM

Date 07/01/2014
Project No. 636-201
DRAWING NO. 1-S18

Office of Facilities

Department of Veterans Affairs

VA FORM 08-6231, FEB. 1983

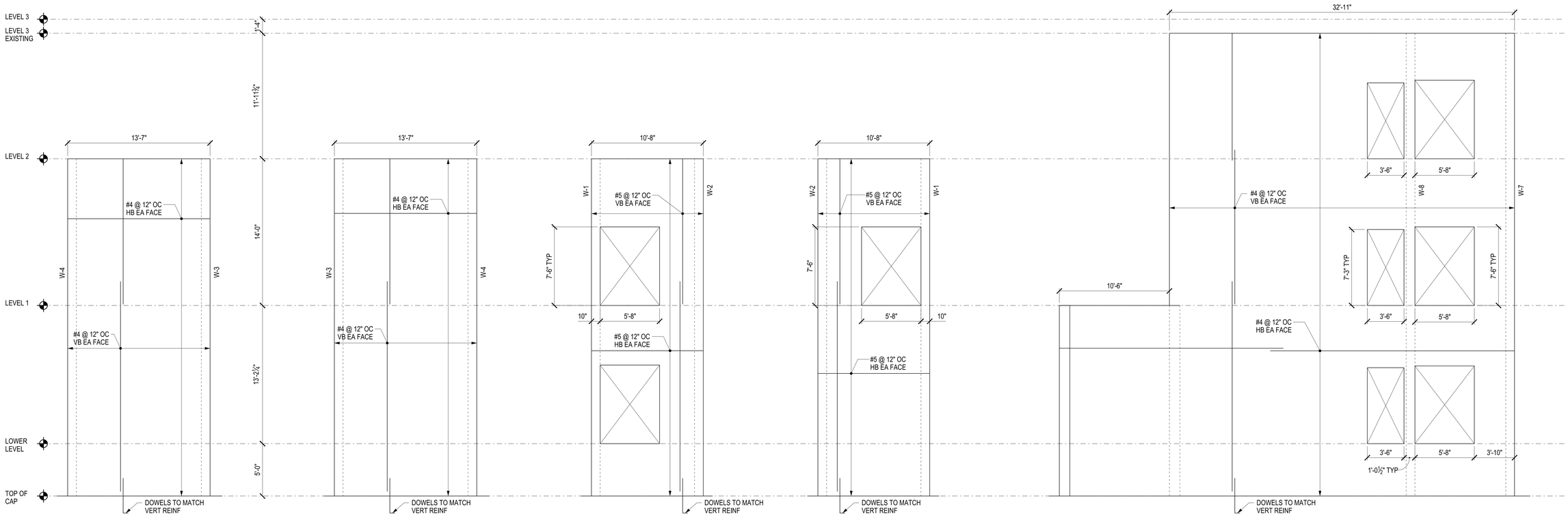

1 WALL W-1 ELEVATION

2 WALL W-2 ELEVATION

3 WALL W-3 ELEVATION

4 WALL W-4 ELEVATION

5 WALL W-5 ELEVATION
BASE BID & DEDUCT ALTERNATE 5

Revisions	Date	Revisions	Date	Revisions	Date

HEERY design
Heery International Inc.
125 South Dubuque Street,
Suite 500,
Iowa City, IA 52240-4003
319.354.4700

project number
11-25503

Drawing Title
WALL ELEVATIONS
.

CONSTRUCTION DOCUMENTS

Project Title
EXPAND BLDG. 1 FOR PACT AMBULATORY CARE, RADIOLOGY, EGRESS STAIRWELL

Building No. BLDG 1 | Checked CT | Drawn NS

Location
ICVA HEALTH CARE SYSTEM

Date 07/01/2014

Project No. 636-201

DRAWING NO. 1-S19

Office of Facilities

Department of Veterans Affairs

VA FORM 08-6231, FEB. 1983

PROJECT: IC-VAMC-EXPAND BLDG. 1 FOR PACT PROJECT
SHEET TITLE: \\VAICSXCD02\Hmm\10\1020600_CADD\1-S19-1020600-IAC.dgn
PLOTTED BY: rdavis PLOT DATE: 7/2/2014 PEN TABLE: HB_PLOT.tbl
PLOTTED BY: rdavis PLOT DATE: 7/2/2014 PEN TABLE: HB_PLOT.tbl

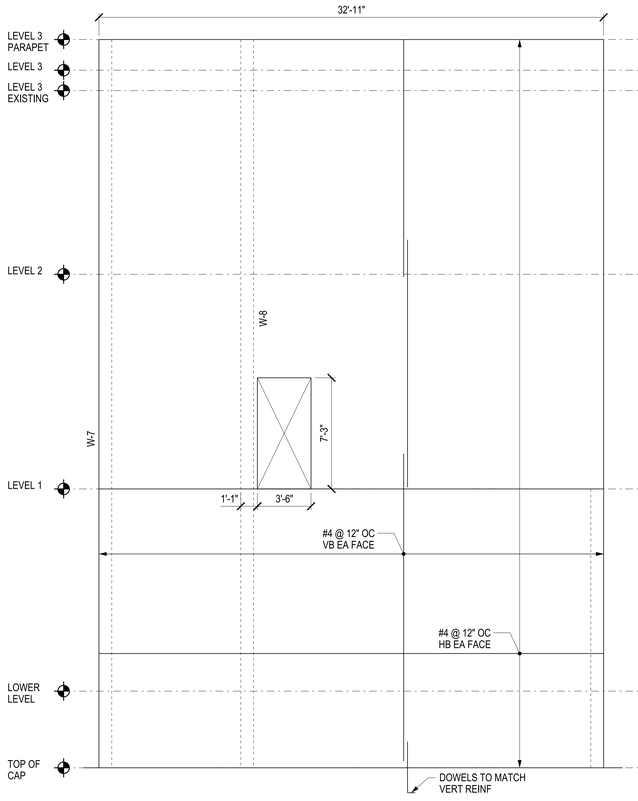

1 WALL W-6 ELEVATION
BASE BID & DEDUCT ALTERNATE 5

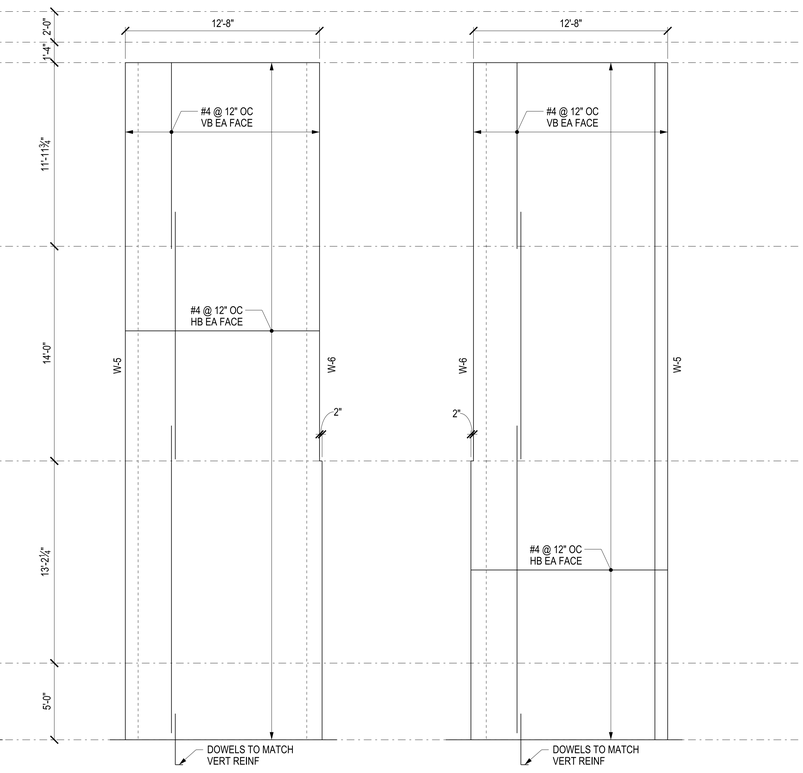

2 WALL W-7 ELEVATION
BASE BID & DEDUCT ALTERNATE 5

3 WALL W-8 ELEVATION
BASE BID & DEDUCT ALTERNATE 5

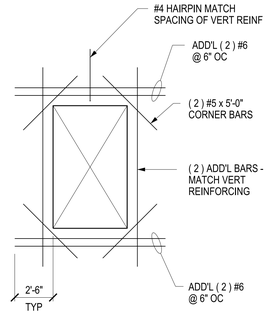

4 TYP REINFORCING AT WALL OPENING

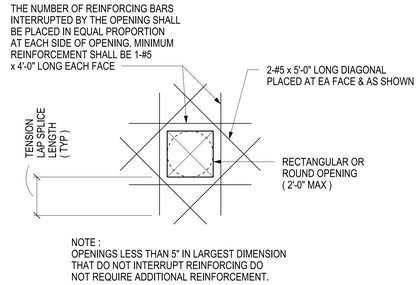

5 TYP REINFORCING AT SMALL WALL OPENING
NOT SHOWN ON ELEVATIONS

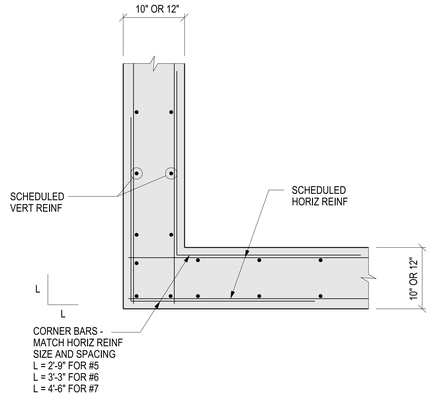

6 TYP SHEAR WALL REINF AT CORNER

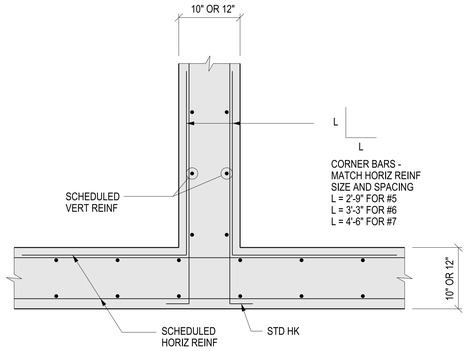

7 TYP SHEAR WALL REINF
AT T-INTERSECTION

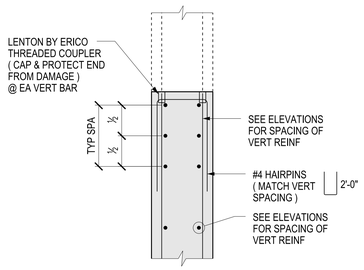

8 TYP SHEAR WALL REINF AT
AT FUTURE SPLICE LOCATIONS

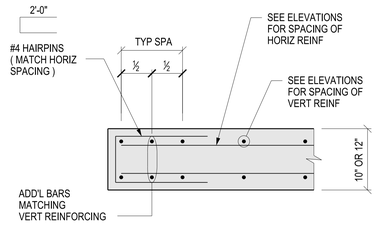

9 TYP SHEAR WALL REINF AT
EDGE OF OPNG & END OF WALL

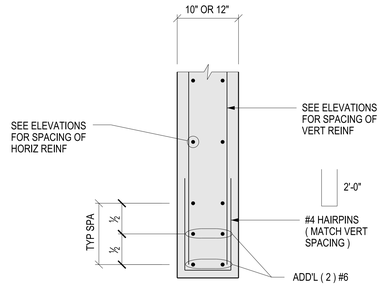

10 TYP SHEAR WALL REINF AT
TOP OF OPENING

Revisions	Date	Revisions	Date	Revisions	Date

HEERY design
Heery International Inc.
125 South Dubuque Street,
Suite 500,
Iowa City, IA 52240-4003
319.354.4700

project number
11-25503

Drawing Title
WALL ELEVATIONS AND DETAILS

CONSTRUCTION DOCUMENTS

Project Title
EXPAND BLDG. 1 FOR PACT AMBULATORY CARE, RADIOLOGY, EGRESS STAIRWELL

Building No. BLDG 1 | Checked CT | Drawn NS

Location
ICVA HEALTH CARE SYSTEM

Date 07/01/2014
Project No. 636-201
DRAWING NO. 1-S20

Office of Facilities
Department of Veterans Affairs

VA FORM 08-6231, FEB. 1983

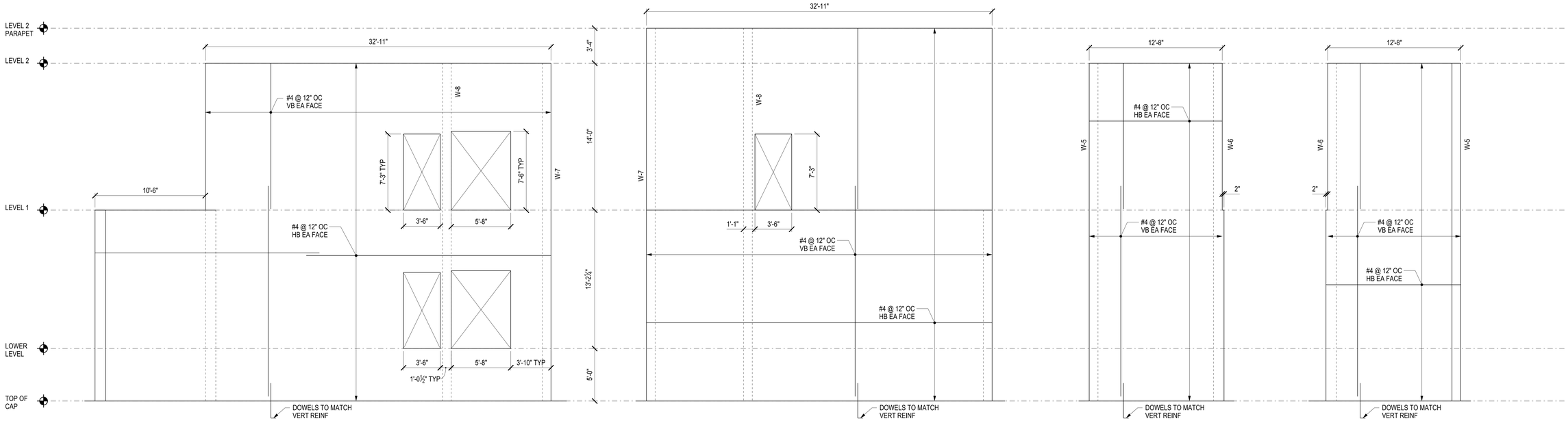

1 WALL W-5 ELEVATION
BASE BID & DEDUCT ALTERNATE 6

2 WALL W-6 ELEVATION
BASE BID & DEDUCT ALTERNATE 6

3 WALL W-7 ELEVATION
BASE BID & DEDUCT ALTERNATE 6

4 WALL W-8 ELEVATION
BASE BID & DEDUCT ALTERNATE 6

Revisions	Date	Revisions	Date	Revisions	Date

HEERY design
Heery International Inc.
125 South Dubuque Street,
Suite 500,
Iowa City, IA 52240-4003
319.354.4700

project number
11-25503

Drawing Title
WALL ELEVATIONS

CONSTRUCTION DOCUMENTS

Project Title
EXPAND BLDG. 1 FOR PACT AMBULATORY CARE, RADIOLOGY, EGRESS STAIRWELL

Building No. BLDG 1 | Checked CT | Drawn NS

Location
ICVA HEALTH CARE SYSTEM

Date 07/01/2014

Project No. 636-201

DRAWING NO. 1-S21

Office of Facilities

Department of Veterans Affairs

VA FORM 08-6231, FEB. 1983

PROJECT: IC-VAMC-EXPAND BLDG. 1 FOR PACT PROJECT
SHEET TITLE: \\VACSOUX2\Hmm\10\1020600_CADD\1-S21-1020600-IAC.dgn
PLOTTED BY: rgaylor PLOT DATE: 7/2/2014
PLOTTED BY: rgaylor PEN TABLE: HB_PLOT.Structural.tbl

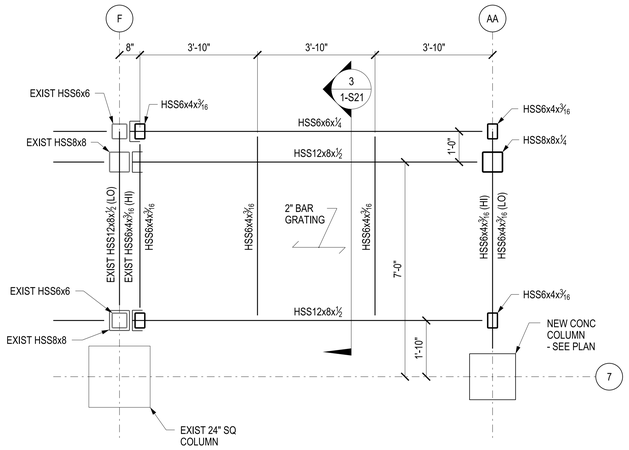

1 PARTIAL WALKWAY FRAMING PLAN

TOP OF STEEL ELEVATION = 9'-0" 1/2" = 1'-0"

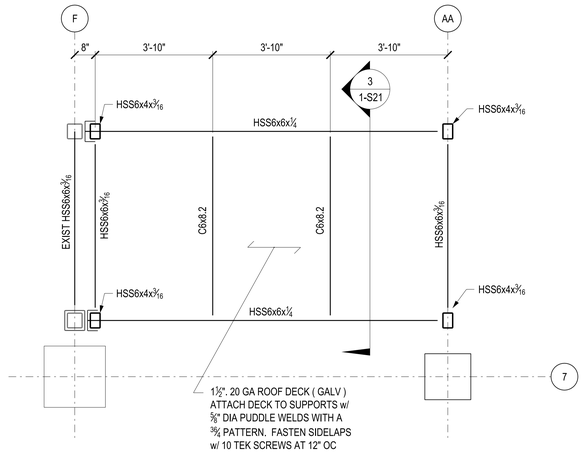

2 PARTIAL ROOF FRAMING PLAN

TOP OF STEEL ELEVATION = 15'-6" 1/2" = 1'-0"

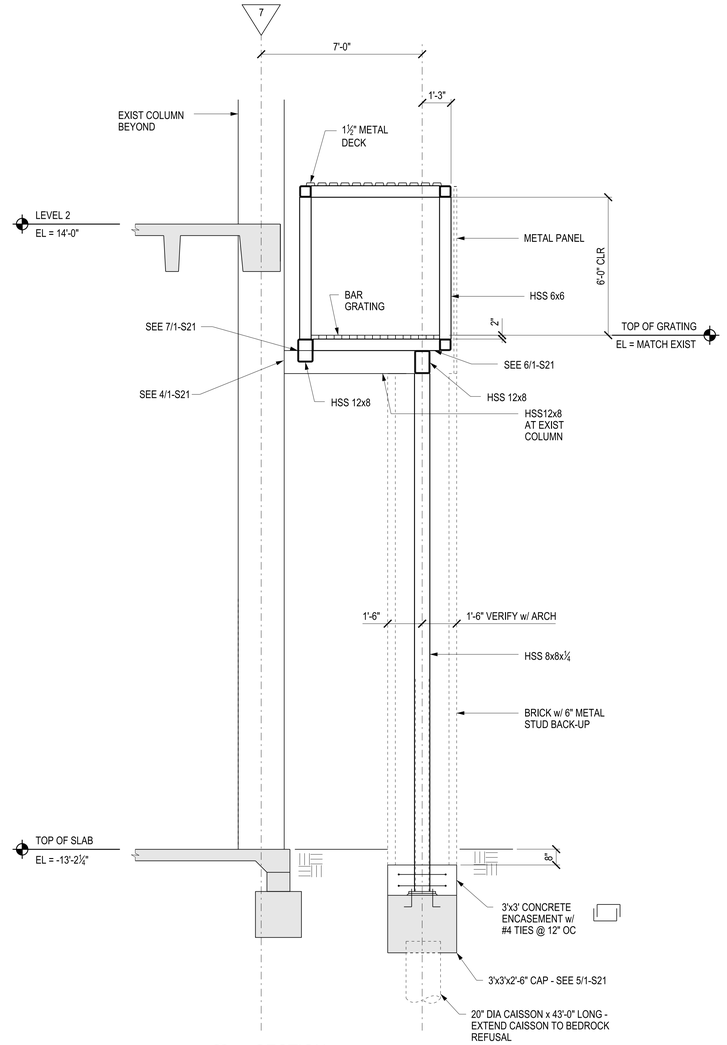

3 SECTION

3/8" = 1'-0"

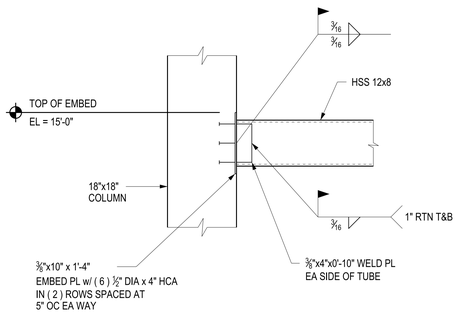

4 DETAIL

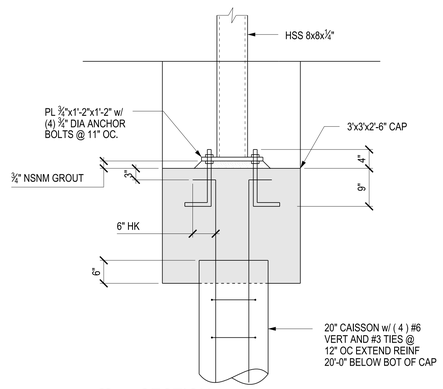

5 SECTION

3/8" = 1'-0"

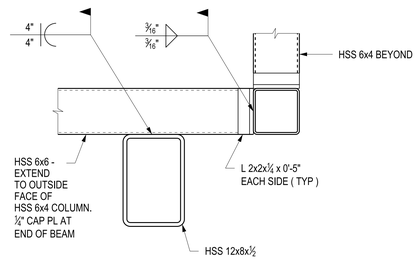

6 DETAIL

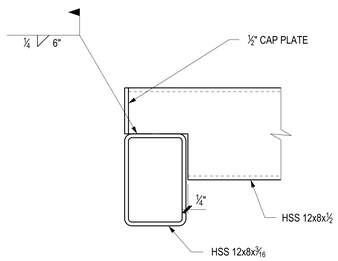

7 DETAIL

Revisions	Date	Revisions	Date	Revisions	Date

HEERY design

Heery International Inc.
125 South Dubuque Street,
Suite 500,
Iowa City, IA 52240-4003
319.354.4700

project number 11-25503

Drawing Title: DETAILS

CONSTRUCTION DOCUMENTS

Project Title: EXPAND BLDG. 1 FOR PACT AMBULATORY CARE, RADIOLOGY, EGRESS STAIRWELL

Building No.: BLDG 1 | Checked: CT | Drawn: NS

Location: ICVA HEALTH CARE SYSTEM

Date: 07/01/2014

Project No.: 636-201

DRAWING NO. 1-S22

Office of Facilities

Department of Veterans Affairs

VA FORM 08-6231, FEB. 1983

PROJECT: IC-VAMC- EXPAND BLDG. 1 FOR PACT PROJECT
SHEET TITLE: \\VACSVI0002\Users\10\1026600_CADD\1-S22-1026600-IAC.dgn
PLOTTED BY: Craig Fox 7/3/2014
PLOTTED BY: PEN TABLE:HL-PL-01-Structural.tbl.pen

CONCRETE COLUMN SCHEDULE

LEVEL \ LOCATION		AA-7 CC-5 CC-4	BB.5.8 CC-5.4	GARAGE COLUMNS	AA.3-0.9 BB-0.9	AA-6 AA-5 AA-4 AA-3	BB-0.4	CC-3	AA-1 AA-2	CC-2 CC-0.9 CC-0.4
LEVEL 3										
F'c = 5000 psi	SIZE VERT REINFORCING TIES TIE TYPE KEY NOTES LEVEL 2				22"x22" (12) #8 #4 @ 16" OC B		18"x18" (8) #6 #4 @ 16" OC A		22"x22" (12) #10 #4 @ 16" OC B	18"x18" (12) #8 #4 @ 16" OC B
F'c = 5000 psi	SIZE VERT REINFORCING TIES TIE TYPE KEY NOTES LEVEL 1	18"x18" (12) #8 #4 @ 16" OC B	18"x18" (8) #6 #4 @ 16" OC A	18"x18" (12) #8 #4 @ 16" OC B	22"x22" (12) #8 #4 @ 16" OC B	22"x22" (16) #8 #4 @ 16" OC C	18"x18" (8) #6 #4 @ 16" OC A	18"x18" (12) #9 #4 @ 16" OC B	22"x22" (12) #10 #4 @ 16" OC B	18"x18" (12) #8 #4 @ 16" OC B
F'c = 5000 psi	SIZE VERT REINFORCING TIES TIE TYPE KEY NOTES LEVEL BASEMENT	18"x18" (12) #8 #4 @ 16" OC B	18"x18" (8) #6 #4 @ 16" OC A		22"x22" (12) #8 #4 @ 16" OC B	22"x22" (16) #8 #4 @ 16" OC C	18"x18" (8) #6 #4 @ 16" OC A	18"x18" (12) #9 #4 @ 16" OC B	22"x22" (12) #10 #4 @ 16" OC B	18"x18" (12) #8 #4 @ 16" OC B
DOWELS		(12) #8	(8) #6	(12) #8	(12) #8	(16) #8	(8) #6	(12) #9	(12) #10	(12) #8

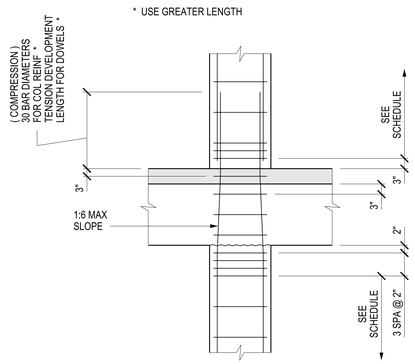

1 TYP COLUMN LAP SPLICE

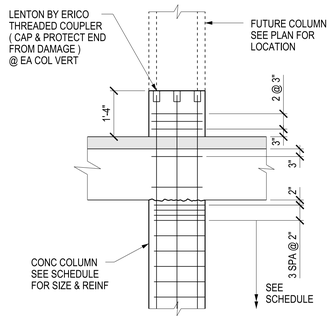

2 TYP CONC COLUMN FUTURE EXPANSION

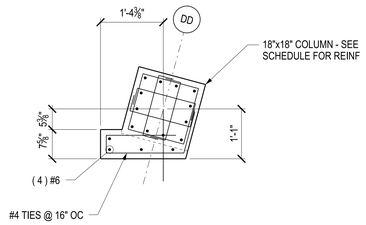

3 PLAN OF GARAGE COLUMN @ D-2.3

CONCRETE COLUMN SCHEDULE - DEDUCT ALTERNATE 5

LEVEL \ LOCATION		AA-7 CC-5 CC-4 CC-2	BB.5.8 CC-5.4	GARAGE COLUMNS	AA.3-0.9 BB-0.9	AA-6 AA-5 AA-4 AA-3	BB-0.4	CC-3	AA-1 AA-2	CC-0.9 CC-0.4
LEVEL 3										
F'c = 5000 psi	SIZE VERT REINFORCING TIES TIE TYPE KEY NOTES LEVEL 2				22"x22" (12) #8 #4 @ 16" OC B		18"x18" (8) #6 #4 @ 16" OC A			18"x18" (12) #8 #4 @ 16" OC B
F'c = 5000 psi	SIZE VERT REINFORCING TIES TIE TYPE KEY NOTES LEVEL 1	18"x18" (12) #8 #4 @ 16" OC B	18"x18" (8) #6 #4 @ 16" OC A	18"x18" (12) #8 #4 @ 16" OC B (A)	22"x22" (12) #8 #4 @ 16" OC B	22"x22" (16) #8 #4 @ 16" OC C	18"x18" (8) #6 #4 @ 16" OC A	18"x18" (12) #9 #4 @ 16" OC B	22"x22" (12) #10 #4 @ 16" OC B	18"x18" (12) #8 #4 @ 16" OC B
F'c = 5000 psi	SIZE VERT REINFORCING TIES TIE TYPE KEY NOTES LEVEL BASEMENT	18"x18" (12) #8 #4 @ 16" OC B	18"x18" (8) #6 #4 @ 16" OC A		22"x22" (12) #8 #4 @ 16" OC B	22"x22" (16) #8 #4 @ 16" OC C	18"x18" (8) #6 #4 @ 16" OC A	18"x18" (12) #9 #4 @ 16" OC B	22"x22" (12) #10 #4 @ 16" OC B	18"x18" (12) #8 #4 @ 16" OC B
DOWELS		(12) #8	(8) #6	(12) #8	(12) #8	(16) #8	(8) #6	(12) #9	(12) #10	(12) #8

KEY NOTES:

(A) SEE 3/1-S23 FOR COLUMN A D-2.3

CONCRETE COLUMN SCHEDULE - DEDUCT ALTERNATE 6

LEVEL \ LOCATION		AA-7 CC-5 CC-4 CC-2 CC-0.9	BB.5.8 CC-5.4	GARAGE COLUMNS	AA-6 AA-5 AA.3-0.9 BB-0.9	AA-4 AA-3	BB-0.4	CC-3	AA-1 AA-2
LEVEL 2									
F'c = 5000 psi	SIZE VERT REINFORCING TIES TIE TYPE KEY NOTES LEVEL 1	18"x18" (12) #8 #4 @ 16" OC B	18"x18" (8) #6 #4 @ 16" OC A	18"x18" (12) #8 #4 @ 16" OC B	22"x22" (12) #8 #4 @ 16" OC B	22"x22" (16) #8 #4 @ 16" OC C	18"x18" (8) #6 #4 @ 16" OC A	18"x18" (12) #9 #4 @ 16" OC B	22"x22" (12) #10 #4 @ 16" OC B
F'c = 5000 psi	SIZE VERT REINFORCING TIES TIE TYPE KEY NOTES LEVEL BASEMENT	18"x18" (12) #8 #4 @ 16" OC B	18"x18" (8) #6 #4 @ 16" OC A		22"x22" (12) #8 #4 @ 16" OC B	22"x22" (16) #8 #4 @ 16" OC C	18"x18" (8) #6 #4 @ 16" OC A	18"x18" (12) #9 #4 @ 16" OC B	22"x22" (12) #10 #4 @ 16" OC B
DOWELS		(12) #8	(8) #6	(12) #8	(12) #8	(16) #8	(8) #6	(12) #9	(12) #10

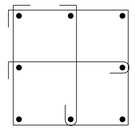

TIE TYPE A
8 BARS

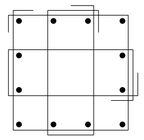

TIE TYPE B
12 BARS

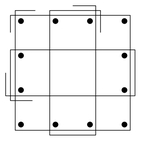

TIE TYPE C
16 BARS

Revisions	Date	Revisions	Date	Revisions	Date

HEERY design

Heery International Inc.
125 South Dubuque Street,
Suite 500,
Iowa City, IA 52240-4003
319.354.4700

project number
11-25503

Drawing Title
COLUMN SCHEDULE AND DETAILS

CONSTRUCTION DOCUMENTS

Project Title
EXPAND BLDG. 1 FOR PACT AMBULATORY CARE, RADIOLOGY, EGRESS STAIRWELL

Building No. **BLDG 1** | Checked CT | Drawn NS

Location **ICVA HEALTH CARE SYSTEM**

Date **07/01/2014**

Project No. **636-201**

DRAWING NO. **1-S23**

Office of Facilities

Department of Veterans Affairs

VA FORM 08-6231, FEB. 1983

PROJECT: IC-VAMC- EXPAND BLDG. 1 FOR PACT PROJECT
SHEET TITLE: \\VAF2VS0002-Hsm1\Vh\10206010_CADD\1-S23.1-10206010-14C.dgn
PLOT DATE: 7/3/2014
PLOTTED BY: Craig Tate
PEN TABLE: HEERY_PLOT-Structural V8.pen

JOIST SCHEDULE

PLAN MARK	SIZE T	SIZE D	SIZE B	REINFORCING TOP & BOTTOM (SOUTH ℄ SUPPORT NORTH)	STIRRUPS	REMARKS
J01	4¾"	20"	7"	(2) - #6 (2) - #5	NONE	
J02	4¾"	20"	7"	(2) - #5		
J03	4¾"	20"	7"	(2) - #6 (2) - #5		
J04	4¾"	20"	7"	(2) - #7 (2) - #6		
J05	4¾"	20"	7"	(2) - #5 (2) - #6		
J06	4¾"	20"	7"	(2) - #6 (2) - #6		
J07	4¾"	20"	7"	(2) - #8 (2) - #7		
J08	4¾"	20"	7"	(2) - #7 (2) - #8	20 - #3 @10" OC EACH END	
J09	4¾"	20"	7"	(2) - #5 (2) - #5		
J10	4¾"	20"	7"	(2) - #5 (2) - #5		
J11	4¾"	20"	7"	(2) - #5		
J12	4¾"	20"	7"	(2) - #8 (2) - #7		
J13	4¾"	20"	7"	(2) - #5 (2) - #7	LE: 10 - #3 @10" OC EACH END	

JOIST SCHEDULE

PLAN MARK	SIZE T	SIZE D	SIZE B	REINFORCING TOP & BOTTOM (SOUTH ℄ SUPPORT NORTH)	STIRRUPS	REMARKS
J14	4¾"	20"	7"	(2) - #8 (2) - #6	NONE	
J15	4¾"	20"	7"	(2) - #7 (2) - #6 (2) - #8	18 - #3 @10" OC EACH END	BOTTOM BARS IN TWO ROWS
J16	4¾"	12"	7"	(2) - #5 (2) - #5 (2) - #5		
J17	4¾"	12"	7"	(2) - #5 (2) - #5		
J18	4¾"	10"	7"	(4) - #6 (2) - #9	#3 @6" THROUGHOUT	
J19	4¾"	20"	7"	(2) - #6 (2) - #9	#3 @10" THROUGHOUT	
J20	4¾"	20"	7"	(2) - #7 (2) - #6		

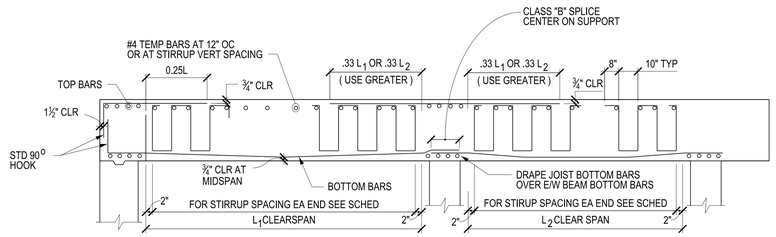

1 TYPICAL JOIST REINFORCING DIAGRAM

NTS

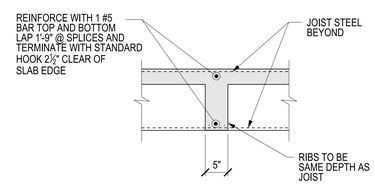

2 TYPICAL DISTRIBUTION RIB

NTS

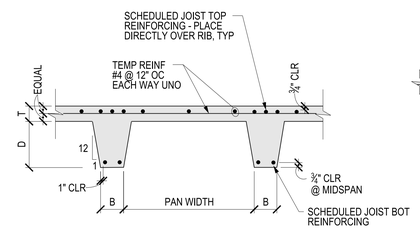

3 TYPICAL PAN JOIST DETAIL

NTS

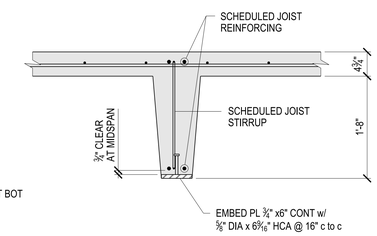

4 PIPE SUPPORT EMBED PLATE

NTS

Revisions	Date	Revisions	Date	Revisions	Date

VA FORM 08-6231, FEB. 1983

HEERY design

Heery International Inc.
125 South Dubuque Street,
Suite 500,
Iowa City, IA 52240-4003
319.354.4700

project number
11-25503

Drawing Title
JOIST SCHEDULE AND DETAILS

CONSTRUCTION DOCUMENTS

Project Title
EXPAND BLDG. 1 FOR PACT AMBULATORY CARE, RADIOLOGY, EGRESS STAIRWELL

Building No. **BLDG 1** | Checked CT | Drawn NS

Location
ICVA HEALTH CARE SYSTEM

Date **07/01/2014**

Project No. **636-201**

DRAWING NO. **1-S24**

Office of Facilities

Department of Veterans Affairs

CONCRETE BEAM SCHEDULE

MARK	SIZE WIDTH x DEPTH	REINFORCING				STIRRUPS TYPE	STIRRUPS SPACING	REMARKS
B1	12"X24¾"	TOP	(5) #5		(5) #5		#4 @ 9" OC THROUGHOUT	
		BOT	(4) #5					
B2	12"X24¾"	TOP			(5) #5		#4 @ 9" OC THROUGHOUT	
		BOT	(4) #5					
B3	12"X24¾"	TOP			(5) #5		#4 @ 9" OC THROUGHOUT	
		BOT	(4) #5					
B4	36"X24¾"	TOP	(5) #7		(12) #7		#4 @ 9" OC THROUGHOUT	
		BOT	(5) #7					
B5	36"X24¾"	TOP			(12) #7		#4 @ 9" OC THROUGHOUT	
		BOT	(8) #7					
B6	36"X24¾"	TOP			(9) #7		#4 @ 9" OC THROUGHOUT	
		BOT	(5) #7					
B7	36"X24¾"	TOP			(5) #7		#4 @ 9" OC THROUGHOUT	
		BOT	(6) #7					
B8	24"X24¾"	TOP	(5) #8		(5) #8		#4 @ 9" OC THROUGHOUT	
		BOT	(4) #8					
B9	36"X24¾"	TOP					#4 @ 9" OC THROUGHOUT	
		BOT	(5) #7					
B10	12"X24¾"	TOP	(2) #8		(2) #8		#4 @ 9" OC THROUGHOUT	
		BOT	(3) #8					
B11	19"X24¾"	TOP	(4) #6				#4 @ 9" OC THROUGHOUT	
		BOT	(4) #6					
B12	19"X24¾"	TOP			(4) #6		LE: 21 - #4 @ 9" OC	
		BOT	(4) #6					

CONCRETE BEAM SCHEDULE

MARK	SIZE WIDTH x DEPTH	REINFORCING				STIRRUPS TYPE	STIRRUPS SPACING	REMARKS
B13	19"X24¾"	TOP	(4) #8				#4 @ 9" OC THROUGHOUT	
		BOT	(4) #6					
B14	19"X24¾"	TOP			(6) #8		LE: 22 -#4 @ 9" OC RE:18 -#4 @ 9" OC	
		BOT	(4) #8					
B15	19"X24¾"	TOP	(5) #6				#4 @ 9" OC THROUGHOUT	
		BOT	(4) #7					
B16	19"X24¾"	TOP			(5) #6		LE: 8 -#4 @ 9" OC RE: 8 -#4 @ 9" OC	
		BOT	(4) #7					
B17	22"X24¾"	TOP	(5) #6				#4 @ 9" OC THROUGHOUT	
		BOT	(4) #7					
B18	22"X24¾"	TOP			(5) #6		LE: 8 -#4 @ 9" OC RE: 8 -#4 @ 9" OC	
		BOT	(4) #7					
B19	25"X24¾"	TOP	(5) #7				#4 @ 9" OC THROUGHOUT	
		BOT	(4) #6					
B20	25"X24¾"	TOP			(5) #6		LE: 28 -#4 @ 9" OC	
		BOT	(4) #7					
B21	16"X24¾"	TOP	(3) #5		(5) #5		#4 @ 9" OC THROUGHOUT	
		BOT	(3) #5					
B22	16"X24¾"	TOP			(5) #5		#4 @ 9" OC THROUGHOUT	
		BOT	(5) #5					
B23	24"X24¾"	TOP	(4) #5				#4 @ 9" OC THROUGHOUT	
		BOT	(4) #5					
B24	24"X24¾"	TOP			(4) #5		#4 @ 9" OC THROUGHOUT	
		BOT	(4) #5					

Revisions	Date	Revisions	Date	Revisions	Date

HEERY design
Heery International Inc.
125 South Dubuque Street,
Suite 500,
Iowa City, IA 52240-4003
319.354.4700

project number
11-25503

Drawing Title
BEAM SCHEDULE

CONSTRUCTION DOCUMENTS

Project Title
EXPAND BLDG. 1 FOR PACT AMBULATORY CARE, RADIOLOGY, EGRESS STAIRWELL

Building No. BLDG 1
Checked CT
Drawn NS
Location ICVA HEALTH CARE SYSTEM

Date 07/01/2014
Project No. 636-201
DRAWING NO. 1-S25

Office of Facilities
Department of Veterans Affairs

VA FORM 08-6231, FEB. 1983

CONCRETE BEAM SCHEDULE

MARK	SIZE WIDTH x DEPTH	REINFORCING				STIRRUPS TYPE	STIRRUPS SPACING	REMARKS
B25	24"X24¾"	TOP					#4 @ 9" OC THROUGHOUT	
		BOT	(4) #5					
B26	12"X24¾"	TOP	(3) #6		(3) #6		#4 @ 9" OC THROUGHOUT	
		BOT	(3) #6					
B27	12"X24¾"	TOP	(3) #6				#4 @ 9" OC THROUGHOUT	
		BOT	(3) #6					
B28	24"X24¾"	TOP	(4) #8		(4) #8 (4) #8		#4 @ 9" OC THROUGHOUT	
		BOT	(3) #8					
B29	24"X24¾"	TOP			(5) #8 (5) #8		LE: 18 -#4 @ 6" OC RE: 18 -#4 @ 6" OC REM #4 @ 9 OC	
		BOT	(4) #8 (3) #8					
B30	24"X24¾"	TOP			(5) #8 (5) #8		LE: 23 -#4 @ 3" OC RE: 15 -#4 @ 6" OC REM #4 @ 9 OC	
		BOT	(2) #8 (3) #8					
B31	24"X24¾"	TOP			(4) #8 (2) #8		LE: 18 -#4 @ 6" OC RE: 15 -#4 @ 6" OC REM #4 @ 9 OC	
		BOT	(4) #8 (3) #8					
B32	24"X24¾"	TOP					#4 @ 9" OC THROUGHOUT	
		BOT	(3) #8					
B33	24"X24¾"	TOP	(4) #5		(4) #5		#4 @ 9" OC THROUGHOUT	
		BOT	(4) #6					
B34	19½"X24¾"	TOP	(3) #7				#4 @ 9" OC THROUGHOUT	
		BOT	(3) #5					
B35	21½"X24¾"	TOP	(7) #6		(6) #6		#4 @ 9" OC THROUGHOUT	
		BOT	(6) #8					
B36	18½"X24¾"	TOP	(7) #5		(5) #5		#4 @ 9" OC THROUGHOUT	
		BOT	(7) #8					

CONCRETE BEAM SCHEDULE

MARK	SIZE WIDTH x DEPTH	REINFORCING				STIRRUPS TYPE	STIRRUPS SPACING	REMARKS
B37	24"X24¾"	TOP	(4) #6		(4) #8		#4 @ 9" OC THROUGHOUT	
		BOT	(4) #7					
B38	24"X24¾"	TOP			(4) #6		LE: 15 -#4 @ 6" OC REM #4 @ 9 OC	
		BOT	(4) #6					
B39	24"X16¾"	TOP	(6) #8		(6) #8		#4 @ 6" OC THROUGHOUT	
		BOT	(6) #8					
B40	24"X16¾"	TOP	(8) #8		(8) #8		#4 @ 6" OC THROUGHOUT	
		BOT	(10) #8					
B41	24"X16¾"	TOP	(8) #8		(8) #8		#4 @ 6" OC THROUGHOUT	
		BOT	(10) #8					
B42	24"X16¾"	TOP	(4) #5		(4) #5		#4 @ 6" OC THROUGHOUT	
		BOT	(4) #5					
B43	24"X16¾"	TOP			(4) #5		#4 @ 6" OC THROUGHOUT	
		BOT	(4) #5					
B44	36"X24¾"	TOP	(5) #7		(8) #7		RE: 7 -#4 @ 12" OC	
		BOT	(5) #7					
B45	24"X24¾"	TOP	(4) #5		(4) #5		#4 @ 9" OC THROUGHOUT	
		BOT	(4) #5					
B46	24"X24¾"	TOP			(4) #5		#4 @ 9" OC THROUGHOUT	
		BOT	(4) #5					
B47	24"X24¾"	TOP	(4) #6				#4 @ 9" OC THROUGHOUT	
		BOT	(4) #6					
B48	24"X24¾"	TOP	(4) #6				#4 @ 9" OC THROUGHOUT	
		BOT	(4) #6					

Revisions	Date	Revisions	Date	Revisions	Date

VA FORM 08-6231, FEB.1983

HEERY design
Heery International Inc.
125 South Dubuque Street,
Suite 500,
Iowa City, IA 52240-4003
319.354.4700

project number
11-25503

Drawing Title
BEAM SCHEDULE

CONSTRUCTION DOCUMENTS

Project Title
EXPAND BLDG. 1 FOR PACT AMBULATORY CARE, RADIOLOGY, EGRESS STAIRWELL

Building No. BLDG 1 | Checked CT | Drawn NS

Location
ICVA HEALTH CARE SYSTEM

Date 07/01/2014

Project No. 636-201

DRAWING NO. 1-S26

Office of Facilities

Department of Veterans Affairs

CONCRETE BEAM SCHEDULE

MARK	SIZE WIDTH x DEPTH	REINFORCING				STIRRUPS TYPE	STIRRUPS SPACING	REMARKS
B49	19"X24¾"	TOP	(4) #6				#4 @ 9" OC THROUGHOUT	
		BOT			(4) #6			
B50	24"X24¾"	TOP	(4) #5				#4 @ 9" OC THROUGHOUT	
		BOT			(4) #5			
B51	24"X24¾"	TOP			(4) #5		#4 @ 9" OC THROUGHOUT	
		BOT			(4) #5			
B52	24"X24¾"	TOP	(4) #5		(4) #5		#4 @ 9" OC THROUGHOUT	
		BOT			(4) #5			
B53	24"X24¾"	TOP	(5) #8		(5) #8		#4 @ 9" OC THROUGHOUT	
		BOT			(4) #8			
B54	24"X24¾"	TOP	(5) #7		(5) #7		#4 @ 9" OC THROUGHOUT	
		BOT			(4) #8			
B55	16"X24¾"	TOP	(5) #6				#4 @ 9" OC THROUGHOUT	EXTEND BOTTOM BARS INTO ADJACENT BEAMS MINIMUM 47 db
		BOT			(3) #6			
B56	16"X24¾"	TOP			(5) #6		#4 @ 12" OC THROUGHOUT	STEPPED BEAM SEE DETAIL 4/1-S14 FOR ELEVATION
		BOT			(3) #8			
B57	24"X24¾"	TOP			(8) #7		#4 @ 9" OC THROUGHOUT	
		BOT			(4) #8			
B58	36"X24¾"	TOP			(14) #7		#4 @ 9" OC THROUGHOUT	
		BOT			(8) #7			
B59	36"X24¾"	TOP			(12) #7		#4 @ 9" OC THROUGHOUT	
		BOT			(9) #7			
B60	12"X24¾"	TOP	(5) #5		(5) #5		#4 @ 9" OC THROUGHOUT	
		BOT			(5) #5			

CONCRETE BEAM SCHEDULE

MARK	SIZE WIDTH x DEPTH	REINFORCING				STIRRUPS TYPE	STIRRUPS SPACING	REMARKS
B61	24½ "X24¾"	TOP	(5) #7				#4 @ 9" OC THROUGHOUT	
		BOT			(4) #6			
B62	24"X24¾"	TOP			(5) #6		#4 @ 9" OC THROUGHOUT	
		BOT			(4) #7			
B63	24"X24¾"	TOP	(5) #7		(5) #7		#4 @ 9" OC THROUGHOUT	
		BOT			(4) #8			

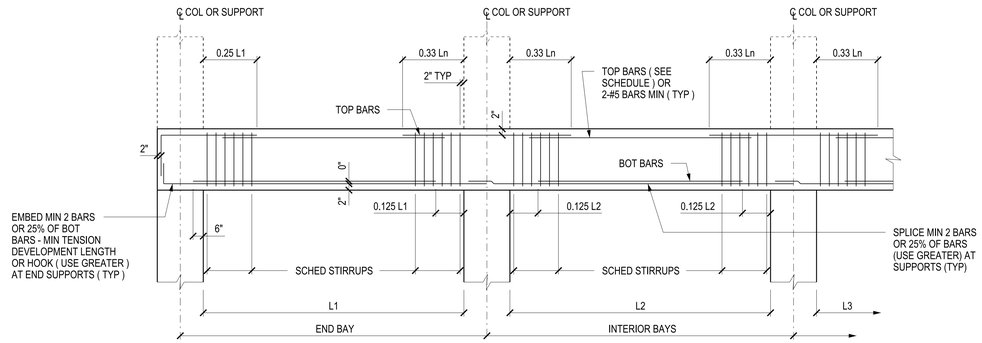

NOTE : SEE BEAM SCHEDULE FOR STIRRUPS AND TOP AND BOTTOM REINFORCING

NOTE :
1. Ln = GREATER OF L1 , L2 OR L3.
2. ALL SPLICES CLASS A UNLESS NOTED OTHERWISE.

1 TYP INTERIOR BEAM REINFORCING

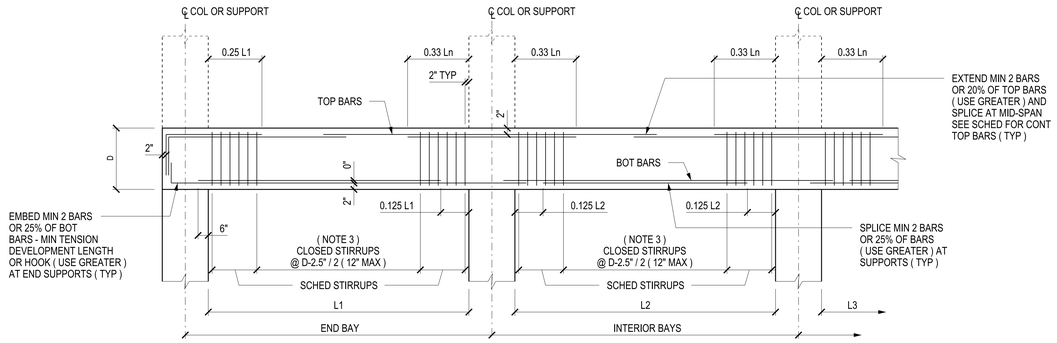

NOTE : SEE BEAM SCHEDULE FOR STIRRUPS AND TOP AND BOTTOM REINFORCING

NOTE :
1. Ln = GREATER OF L1 , L2 OR L3.
2. ALL SPLICES CLASS A UNLESS NOTED OTHERWISE.
3. MATCH SIZE OF SCHEDULED STIRRUPS.

2 TYP PERIMETER BEAM REINFORCING

Revisions	Date	Revisions	Date	Revisions	Date

HEERY design
Heery International Inc.
125 South Dubuque Street,
Suite 500,
Iowa City, IA 52240-4003
319.354.4700

project number 11-25503

Drawing Title: BEAM SCHEDULE AND DETAILS

CONSTRUCTION DOCUMENTS

Project Title: EXPAND BLDG. 1 FOR PACT AMBULATORY CARE, RADIOLOGY, EGRESS STAIRWELL

Building No.: BLDG 1 | Checked: CT | Drawn: NS

Location: ICVA HEALTH CARE SYSTEM

Date: 07/01/2014

Project No.: 636-201

DRAWING NO. 1-S27

Office of Facilities

Department of Veterans Affairs

PROJECT: IC-VAMC- EXPAND BLDG. 1 FOR PACT PROJECT
SHEET TITLE: \\VAC5VI002.vhem.lcl\1020600_CAD\11-S27-1020600-IAC.dgn
DATE: 7/01/2014 PEN: TABLE-HALF_PLOT-Structural18.pen
PLOTTED BY: rarey, Mary

VA FORM 08-6231, FEB. 1983