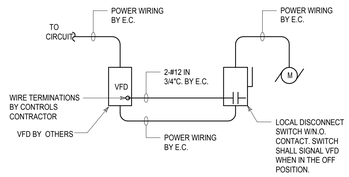

1 VFD-LOCAL DISCONNECT SWITCH WIRING DIAGRAM

SCALE = NTS

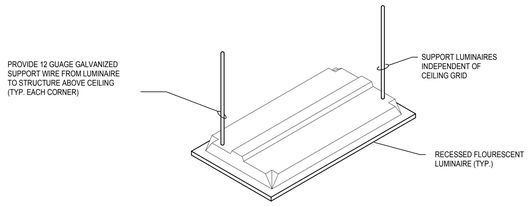

2 LIGHT FIXTURE SUSPENSION DETAIL

SCALE = NTS

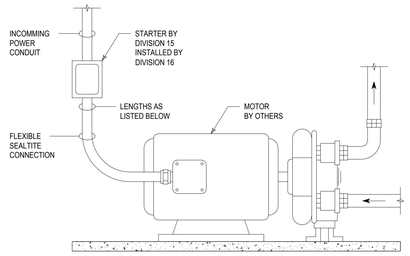

NOTE:

AT TERMINALS WHERE FLEXIBILITY IS REQUIRED, LENGTHS SHALL NOT EXCEED:

1) 3 FEET FOR TRADE SIZES 1/2" THROUGH 1 1/4"
2) 4 FEET FOR TRADE SIZES 1 1/2" THROUGH 2"
3) 5 FEET FOR TRADE SIZE 2 1/2" AND LARGER

3 MOTOR CONNECTIONS

SCALE = NTS

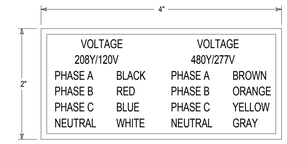

VOLTAGE 208Y/120V		VOLTAGE 480Y/277V	
PHASE A	BLACK	PHASE A	BROWN
PHASE B	RED	PHASE B	ORANGE
PHASE C	BLUE	PHASE C	YELLOW
NEUTRAL	WHITE	NEUTRAL	GRAY

NOTES:

1. LABEL SHALL BE DISPLAYED ON ALL SWITCHBOARDS, PANELBOARDS, TRANSFER SWITCHES AND PULLBOXES (MULTIPLE VOLTAGES)
2. NAMEPLATE SHALL BE WHITE LETTERING ON BLACK MICARTA.
3. IF ONLY ONE VOLTAGE IS PRESENT, LABEL SHALL INDICATE ONLY THAT RESPECTIVE VOLTAGE.

4 BRANCH WIRING IDENTIFICATION

SCALE = NTS

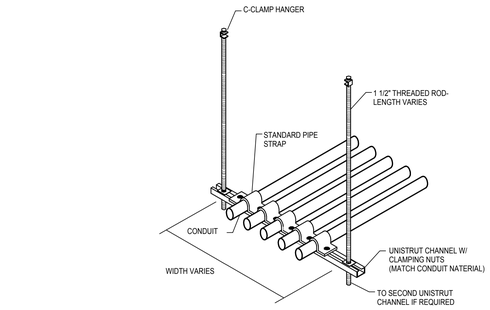

5 CONDUIT SUSPENSION DETAIL

SCALE = NTS

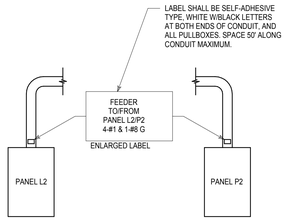

6 FEEDER LABELING DETAIL

SCALE = NTS

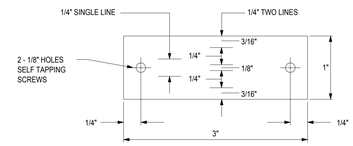

NOTES:

1. BLACK MICARTA WITH WHITE ENGRAVED LETTERS, 3/8" HIGH
2. FASTEN TO EQUIPMENT WITH SELF TAPPING SCREWS.
3. PROVIDE NAMEPLATES FOR THE FOLLOWING:

A. PANELS, MDP POSITIONS, OVENS, COOLERS
B. FUSED SAFETY SWITCHES, STARTERS, CONTROL PANELS
C. CONTROL DEVICES OUT OF SIGHT OF CONTROLLED EQUIPMENT
D. ALL CONTROL DEVICES, SWITCH AND PILOT LIGHTS, REMOTE SWITCHES, ETC.

4. SUBMIT LISTING OF NAMEPLATES FOR APPROVAL.

7 NAMEPLATE DETAIL

SCALE = NTS

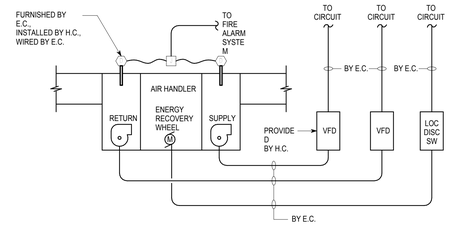

8 AIR HANDLING UNIT WIRING DIAGRAM (AHU-N1 & S1)

SCALE = NTS

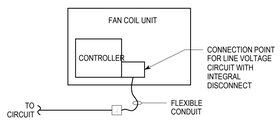

9 FAN COIL UNIT WIRING DIAGRAM

SCALE = NTS

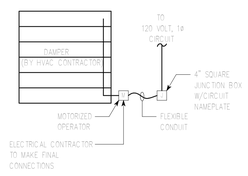

10 MOTORIZED DAMPER WIRING DIAGRAM

SCALE = NTS

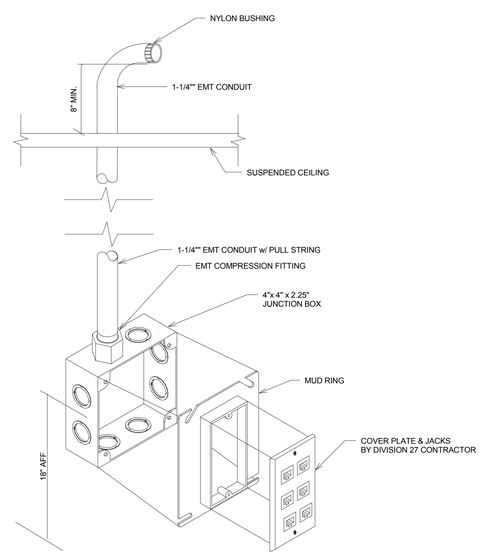

12 TELECOMMUNICATION OUTLET ROUGH-IN DETAIL

SCALE = NTS

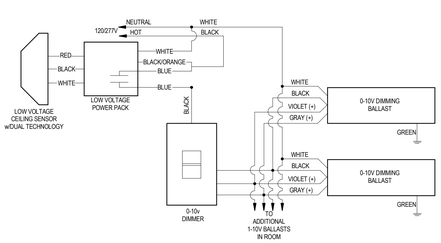

13 SENSOR WITH 0-10v DIMMING CONTROL WIRING DIAGRAM

NOT TO SCALE

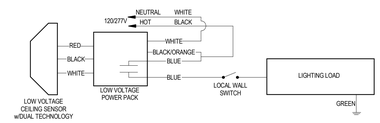

14 TYPICAL SENSOR CONTROL WIRING DIAGRAM

NOT TO SCALE

NORTH

FULLY SPRINKLERED BID DOCUMENTS

Revisions:	Date

CONSULTANTS:

HOPE FURRER Associates, Inc.

ARCHITECTS/ENGINEERS:

A|E works
6587 HAMILTON AVENUE
PITTSBURGH, PENNSYLVANIA 15206
PH: 412.287.7333 FAX: 412.287.7334
www.ae-works.com

Drawing Title ELECTRICAL DETAILS

Approved: Project Director

Project Title BUILDING 9 - SECOND FLOOR RENOVATION

Location: 1400 Blackhorse Hill Road Coatesville, PA 19320

Date	Checked	Drawn
05 / 12 / 14	JJD	JMZ

Project Number 542-13-105

Building Number 9

Drawing Number E600

Dwg. 112 **of** 125

Office of Construction and Facilities Management

Department of Veterans Affairs

VA FORM 08-6231