VA HEALTHCARE SYSTEM

B86 VCS STORE/OT HVAC REMODEL

SEPTEMBER 05, 2014

SHEET INDEX

COVER – AREA AND SITE MAPS AND SHEET INDEX
M1 – BASEMENT HVAC PIPING PLAN, DETAILS AND SCHEDULES
M2 – FIRST FLOOR HVAC PIPING PLAN

VA SITE MAP

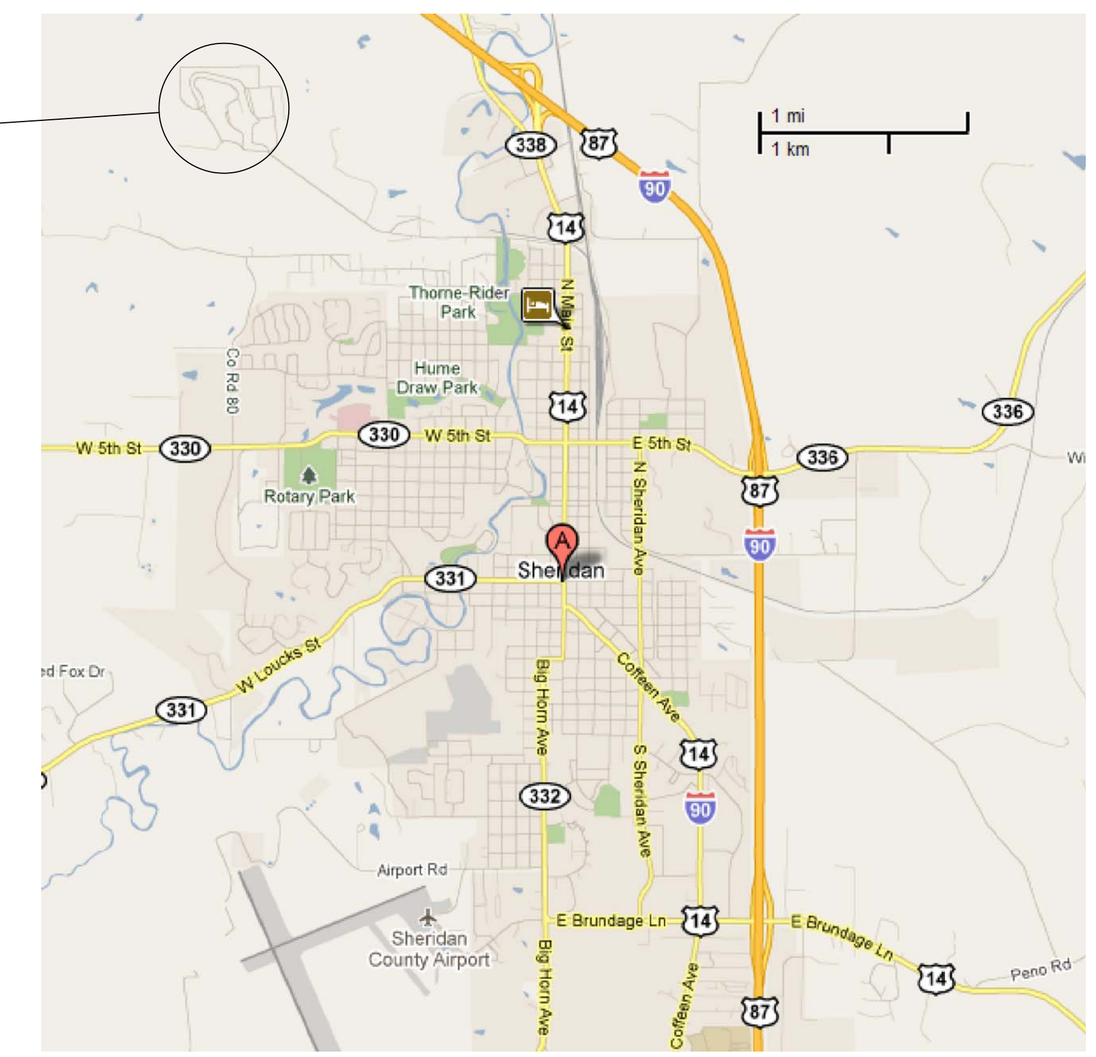

AREA MAP

Revisions:	Initials	Date

CONSULTANTS:

ARCHITECT/ENGINEERS:

Drawing Title: AREA AND SITE MAPS AND SHEET INDEX	Project Title: B86 VCS STORE/ PT HVAC REMODEL	Project Number: 666-15-03S	Office of Facilities Management
Approved: Project Director: SEAN SALTZMAN	Location: SHERIDAN, WY	Building Number: 86	
	Date: SEP 05, 2014 / Checked: WELTY / Drawn: LAS	Drawing Number: COVER, Dwg. 1 of 3	VA HEALTHCARE SYSTEM — Department of Veterans Affairs

VA FORM 08-6231, OCT 1978

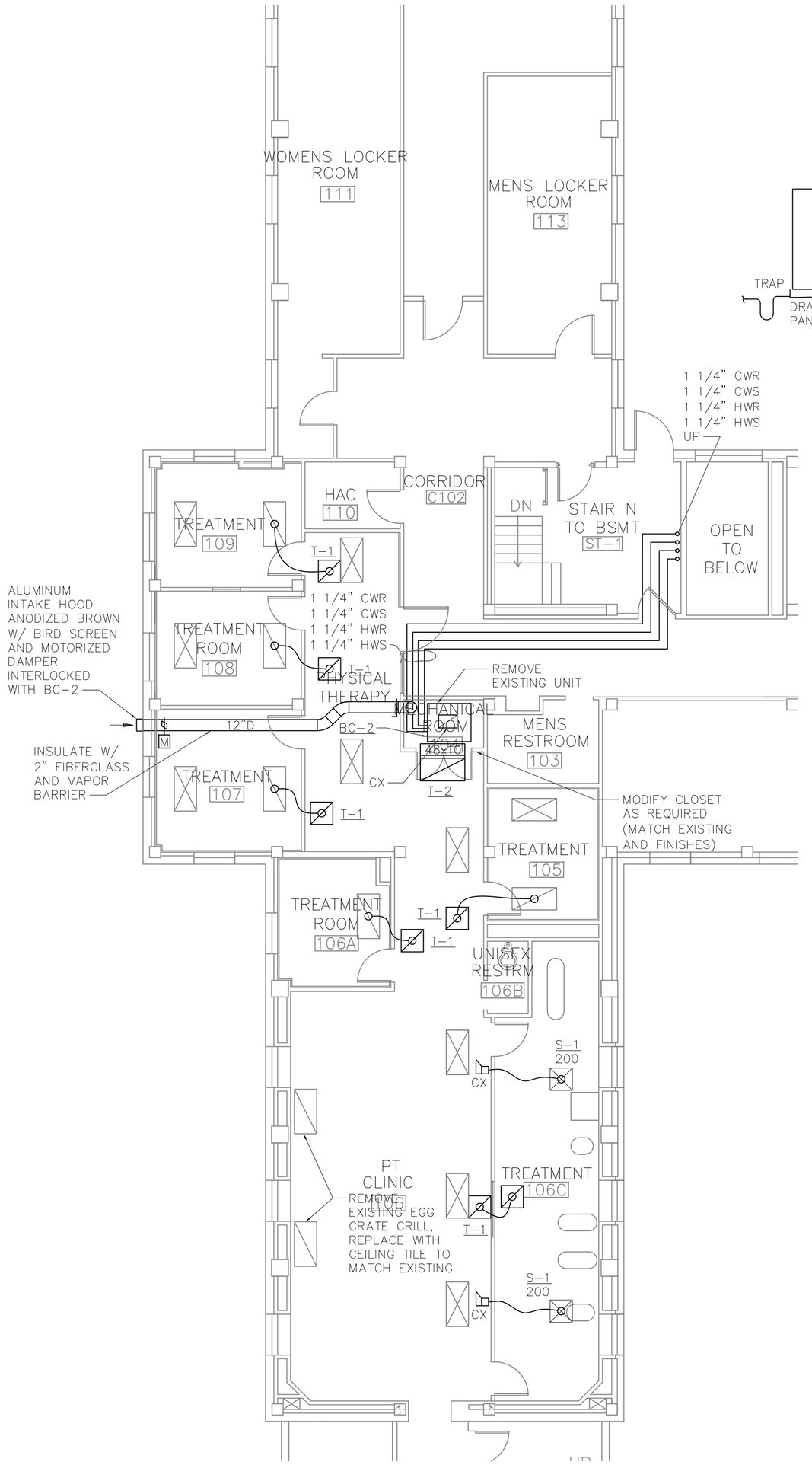

A M1 PT HVAC REMODEL PLAN

SCALE: 1/8" = 1'-0"

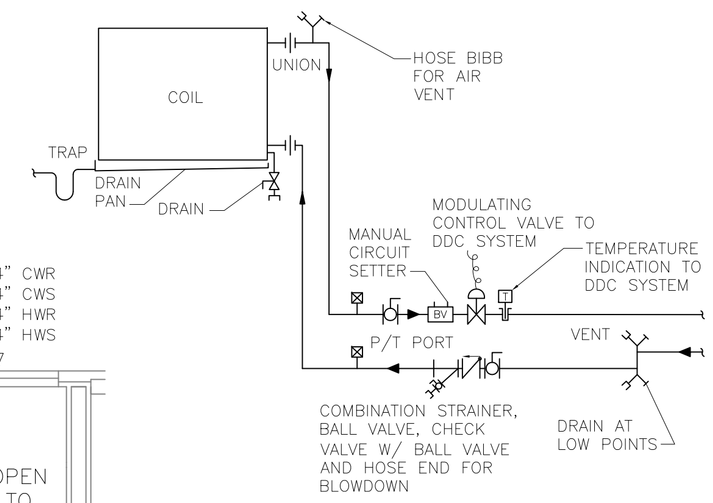

1 M3 COIL PIPING DETAIL

SCALE: NTS

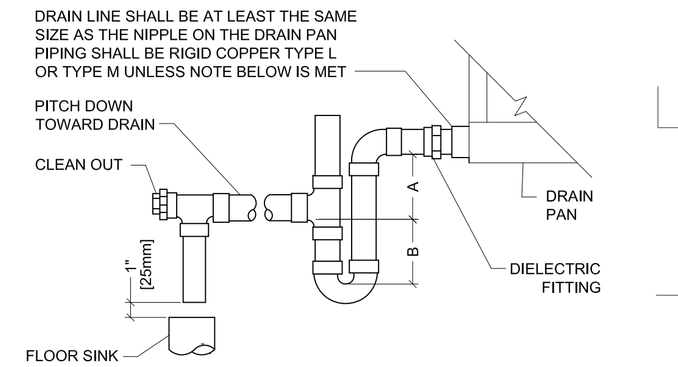

NOTE:
1. CONDENSATE DRAINS SHALL BE 1" TYPE "L" COPPER.
2. DIELECTRIC FITTING TO BE USED WHEN TWO DISSIMILAR METALS ARE TO BE CONNECTED.

UNIT TYPE	A	B
DRAW THRU	2" [50mm] PLUS X	X
BLOW THRU	1" [25mm] MINIMUM	2X

WHERE X = STATIC PRESSURE IN PAN

2 M3 DRAIN TRAP DETAIL

SCALE: NTS

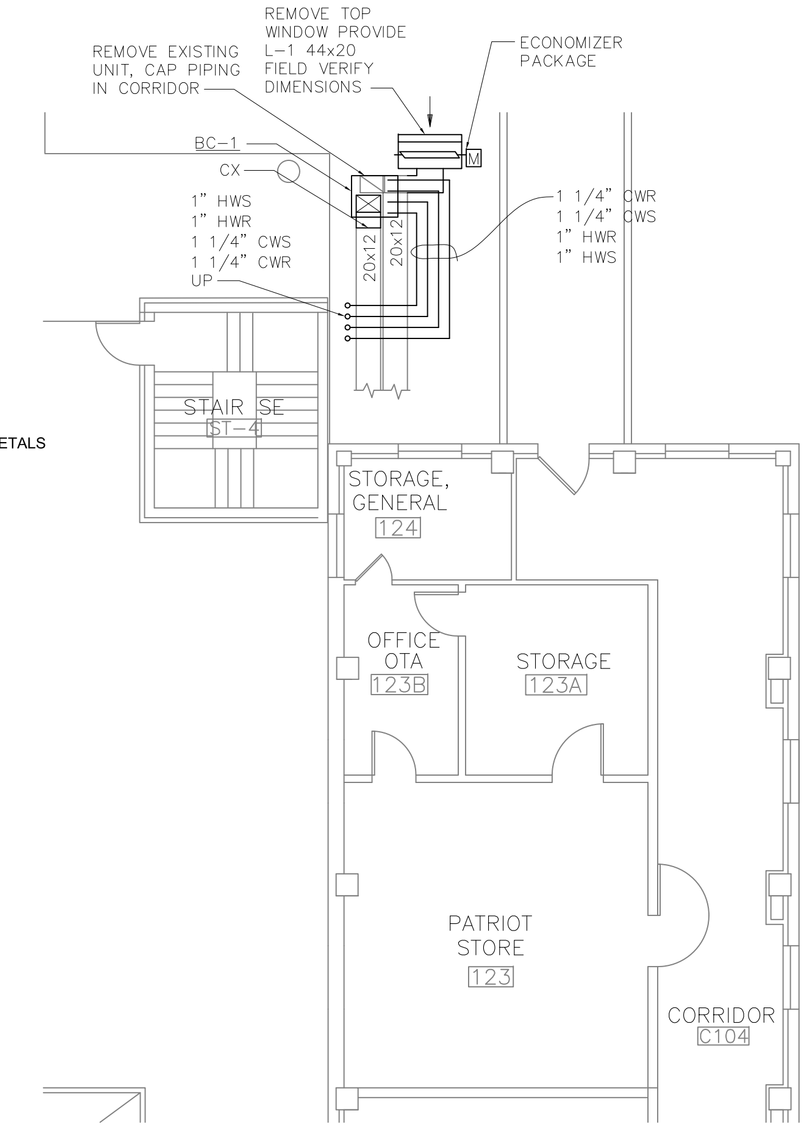

B M1 VCS STORE HVAC REMODEL PLAN

SCALE: 1/8" = 1'-0"

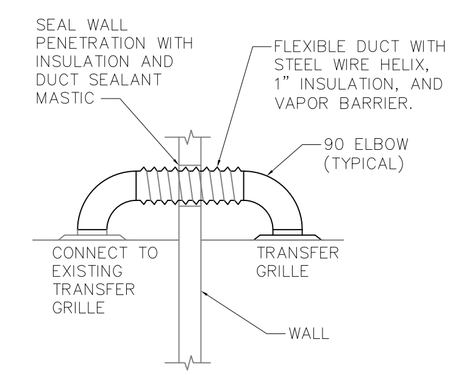

3 M3 TRANSFER DUCT DETAIL

SCALE: NTS

UPFLOW VERTICAL BLOWER COIL SCHEDULE

			COOLING					HEATING								
TAG	MFGR.	MODEL	CFM	BTUH	GPM	EWT	LWT	CFM	BTUH	GPM	EWT	LWT	POWER	MCA	MOCP	NOTES
BC-1	TRANE	UCCAD03A	1,560	33,000	7	45	55	1,275	51,000	5	180	152	208/60/3	9.13	15	1,2,3,4
BC-2	TRANE	UCCAD06A	2,640	53,000	12	45	55	2,225	89,000	9	180	158	208/60/3	9.13	15	1,2,3,4

1) CONTROL SHALL BE BY ROOM TEMPERATURE SENSOR AND TRANE TRACER FRONT END. PROVIDE ECONOMIZER CONTROLS ON BC-1.
2) COOLING WATER SHALL BE 25% PROPYLENE GLYCOL
3) HEATING WATER SHALL BE 30% PROPYLENE GLYCOL
4) PROVIDE REMOTE 2" FILTER BOX WITH SEALED, HINGED, LATCHING COVER. B-1=24x20 MIN., B-2=24x32 MIN. PROVIDE MERV 8 FILTERS.

LOUVER SCHEDULE

L-1 SHALL BE APPROVED EQUAL TO PENN MODEL S-8, 4" DEEP, FLANGED, EXTRUDED ALUMINUM, ANODIZED BROWN. PROVIDE COLOR CHART FOR VA APPROVAL

DIFFUSER AND GRILLE SCHEDULE

T-1 SHALL BE APPROVED EQUAL TO KRUEGER MODEL 6690, 24x24 PANEL, OFF WHITE, 8" ROUND NECK.

T-2 SHALL BE APPROVED EQUAL TO KRUEGER MODEL S80H, 48x24, OFF WHITE. PROVIDE 48x10 DUCT OVER EXISTING SUPPLY.

S-1 SHALL BE APPROVED EQUAL TO KRUEGER MODEL 1240, MODULAR CORE, 24x24 PANEL, OFF WHITE, 8" ROUND NECK. USE HIGH EFFICIENCY TAKE-OFF APPROVED EQUAL TO HERCULES 8" HTO WITH INTEGRAL VOLUME DAMPER.

MODIFY CEILING TILE AND ADD T-BAR TO INSTALL.

Revisions:	Initials	Date

CONSULTANTS:

ARCHITECT/ENGINEERS:

Drawing Title: BASEMENT FLOOR HVAC REMODEL PLAN

Approved: Project Director: SEAN SALTZMAN

Project Title: B86 VCS STORE/ PT HVAC REMODEL

Location: SHERIDAN, WY

Date: SEP 05, 2014 | Checked: WELTY | Drawn: LAS

Project Number: 666-15-03S

Building Number: 86

Drawing Number: M1

Dwg. 2 of 3

Office of Facilities Management

VA Department of Veterans Affairs

VA FORM 08-6231, OCT 1978

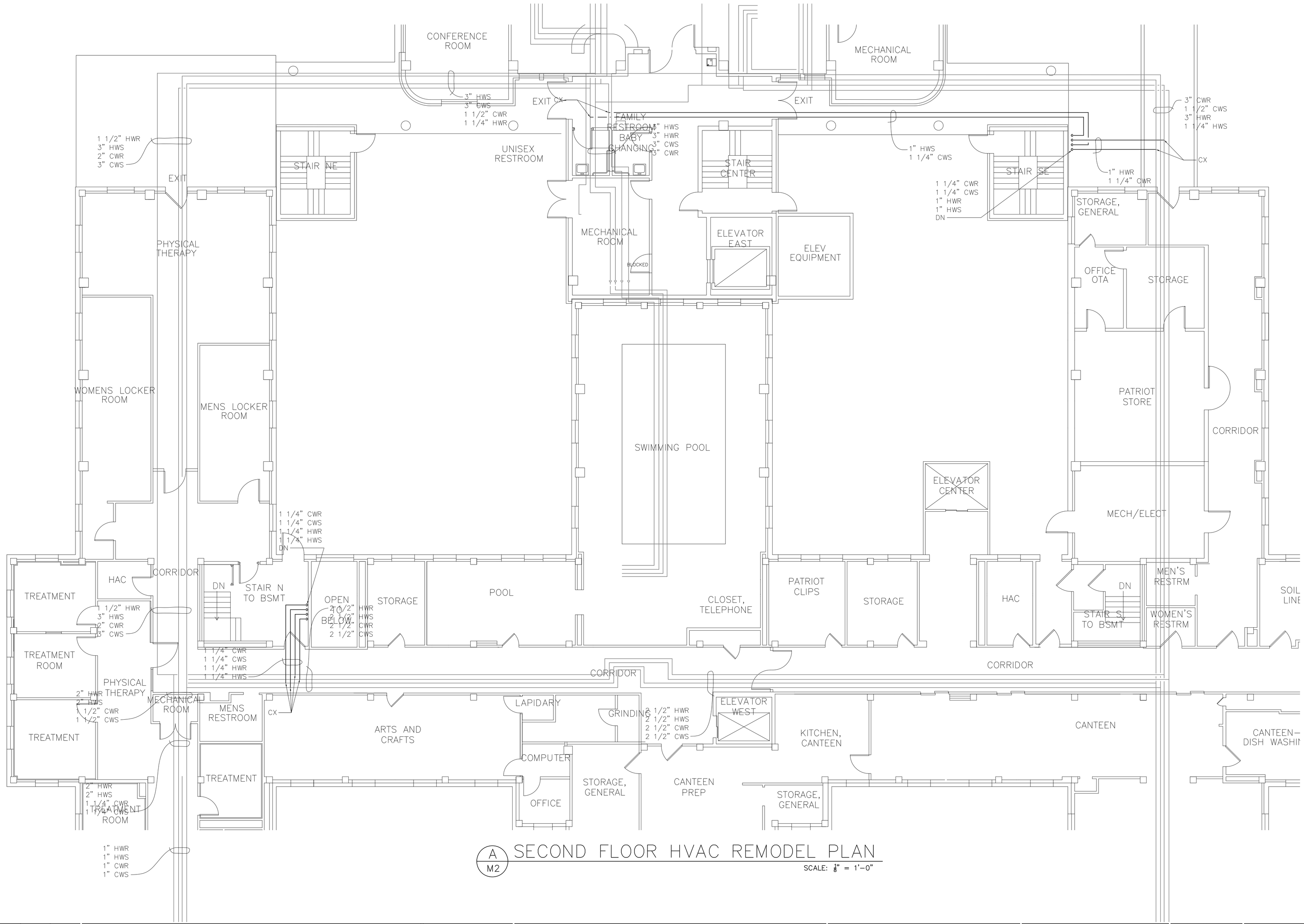

A / M2 SECOND FLOOR HVAC REMODEL PLAN

SCALE: 1/8" = 1'-0"

Revisions:	Initials	Date

CONSULTANTS:

ARCHITECT/ENGINEERS:

Drawing Title: 1ST FLOOR HVAC REMODEL PLAN	Project Title: B86 VCS STORE/ PT HVAC REMODEL		Project Number: 666-15-03S
			Building Number: 86
Approved: Project Director: SEAN SALTZMAN	Location: SHERIDAN, WY		Drawing Number: M2
	Date: SEP 05, 2014	Checked: WELTY / Drawn: LAS	Dwg. 3 of 3

Office of Facilities Management

VA HEALTHCARE SYSTEM — Department of Veterans Affairs

VA FORM 08-6231, OCT 1978