Accuride®

MODEL 3640
Heavy Duty Over Travel Slide
200 lb. Capacity Side Mount
75 lb. Capacity Under/Flat Mount

Applications: Use in large storage drawers, store fixtures, and lateral files over 42" wide requiring a heavy duty, over travel slide. Model 3640 can be under/flat mounted up to 75 lbs.

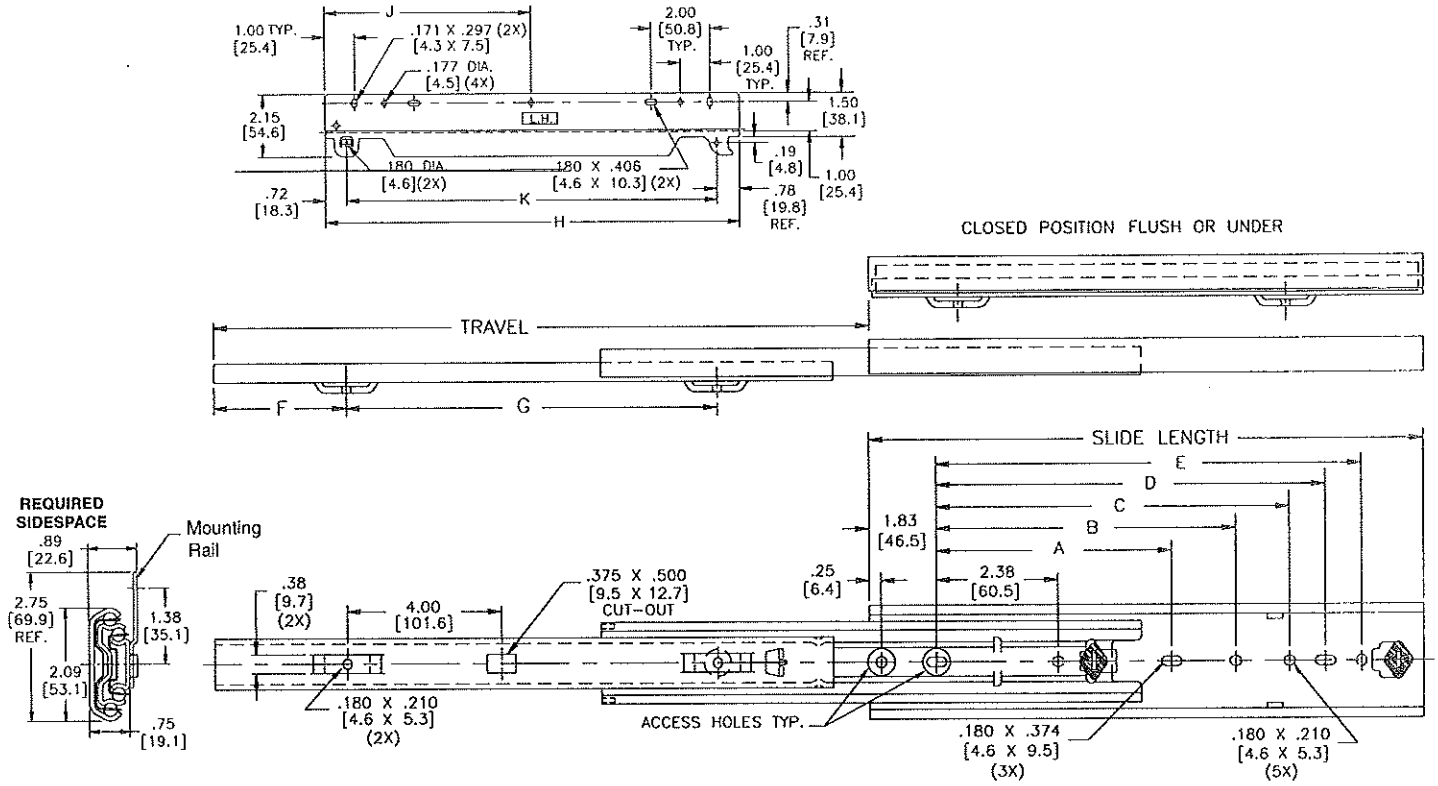

Finish Bright electro-zinc (C) or black zinc (CB) plating available

Length 12" - 28"

Height 2.09" - Side mount
.89" - Under/flat mount

Travel Length + 1" over-travel

Load 200 lbs. at 18" - Side mount*
75 lbs. at 16" - Under/flat mount**

Sidespace .89" (+.030 -.000)

Mounting Rail - Side mount
Under/flat mount

Hardware #8 pan head screws

Disconnect Rail lift off

Features Sequential movement, silenced open and closed, detent closed, handed mounting bracket

* Based on an 18" slide on a 42" wide drawer cycled 75,000 times.

** Based on a 16" slide on a 24" wide drawer cycled 50,000 times.

SLIDE LENGTH	SLIDE TRAVEL	A	B	C	D	E	F	G
12.00 [305]	13.00 [330]	-	5.33 [135.4]	7.05 [179.1]	8.05 [204.5]	9.05 [229.9]	1.00 [25.4]	8.50 [215.9]
14.00 [356]	15.00 [381]	-	7.33 [186.2]	9.05 229.9]	10.05 [255.3]	11.05 [280.7]	1.00 [25.4]	8.50 [215.9]
16.00 [406]	17.00 [432]	-	9.33 [237.0]	11.05 [280.7]	12.05 [306.1]	13.05 [331.5]	1.00 [25.4]	8.50 [215.9]
18.00 [457]	19.00 [483]	7.50 [190.5]	11.33 [287.8]	13.05 [331.5]	14.05 [356.9]	15.05 [382.3]	1.50 [38.1]	10.50 [266.7]
20.00 [508]	21.00 [533]	8.50 [215.9]	13.33 [338.6]	15.05 [382.3]	16.05 [407.7]	17.05 [433.1]	1.50 [38.1]	10.50 [266.7]
22.00 [559]	23.00 [584]	9.50 [241.3]	15.33 [389.4]	17.05 [433.1]	18.05 [458.5]	19.05 [483.9]	2.00 [50.8]	12.50 [317.5]
24.00 [610]	25.00 [635]	10.50 [266.7]	17.33 [440.2]	19.05 [483.9]	20.05 [509.3]	21.05 [534.7]	2.00 [50.8]	12.50 [317.5]
26.00 [660]	27.00 [686]	11.50 [292.1]	19.33 [491.0]	21.05 [534.7]	22.05 [560.1]	23.05 [585.5]	2.50 [63.5]	15.50 [393.7]
28.00 [711]	29.00 [737]	12.50 [317.5]	21.33 [541.8]	23.05 [585.5]	24.05 [610.9]	25.05 [636.3]	2.50 [63.5]	15.50 [393.7]

SLIDE LENGTH	RAIL PART NUMBER	H	J	K	SLIDE LENGTH	RAIL PART NUMBER	H	J	K
12" - 16"	5430-1216-CL 5430-1216-CR	10.00 [254.0]	-	8.50 [215.9]	21" - 24"	5430-2124-CL 5430-2124-CR	14.00 [355.6]	7.00 [177.8]	12.50 [317.5]
17" - 20"	5430-1720-CL 5430-1720-CR	12.00 [304.8]	-	10.50 [266.7]	25" - 28"	5430-2528-CL 5430-2528-CR	17.00 [431.8]	8.50 [215.9]	15.50 [393.7]

87 & 187 Heavy-Duty Standards & Brackets

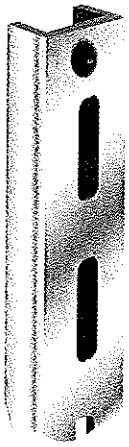

87

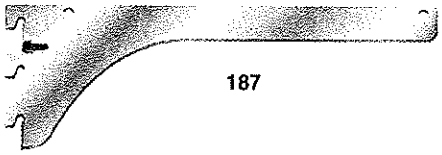

187

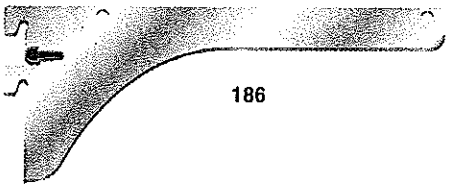

186

STANDARDS	Available in these lengths (Inches):							
Number/Finish	24	36	48	60	72	84	96	144
87 ANO Anochrome—Heavy Duty 12-gauge steel 5 per package.	●	●	●	●	●	●	●	●
87 WH White—Heavy Duty 12-gauge steel 5 per package.	●	●	●	●	●	●	●	

Mounting Screws – 87-10 WH 100 White head screws for mounting 87 WH standards. #10 x 2-3/4.

BRACKETS	Stocked in the following sizes (inches):								
Number/Finish	8	10	12	14	16	18	20	22	24
187LL ANO Anochrome—Heavy Duty steel with single molded nylon cam lock lever. Packed 10 per box.			●	●	●	●	●	●	●
187LL WH White—Heavy Duty steel with single molded nylon cam lock lever. Packed 10 per box.			●	●	●	●	●	●	●
186LL ANO Anochrome—Heavy Duty steel with single molded nylon cam lock lever. Packed 10 per box.	●	●							
186LL WH White—Heavy Duty steel with single molded nylon cam lock lever. Packed 10 per box.		●							

Standard & Bracket Accessories

For single 1"-adjustment slotted brackets

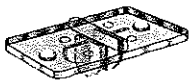

101 PLAS

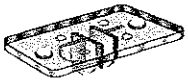

104 PLAS, ANO

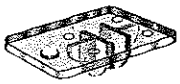

104-1/2 PLAS, ANO

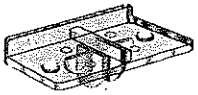

102 PLAS

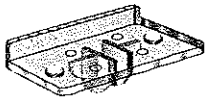

103 PLAS

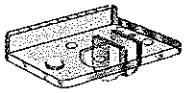

103-1/2L PLAS

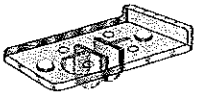

105 PLAS

119 RUB

129 RUB

118 ANO

153 ANO

154 ANO

137 ANO 135 ANO

136 ANO 134 ANO

Number	Description	Finish or Use
BRACKET ACCESSORIES		
101 PLAS	Back Rest	Clear plastic
104 ANO	Back Rest	Anochrome steel
104 PLAS	Back Rest	Clear plastic
104-1/2 ANO	Back Rest	Anochrome steel
104-1/2 PLAS	Back Rest	Clear plastic
102 PLAS	Front Rest	Clear plastic
103 PLAS	Front Rest	Clear plastic
103-1/2L PLAS	Front Rest (left)	Clear plastic
103-1/2R PLAS	Front Rest (right)	Clear plastic
105 PLAS	End Rest	Clear plastic
119 RUB	Rubber Cushion	Use with metal rests
129 RUB	Rubber Cushion	Use with plastic rests
Packed: 100 per box		
STANDARD ACCESSORIES		
118 ANO	Cap-#80 Standard	Top cap
134 ANO	Socket-#83 Standard	Bottom socket
135 ANO	Socket-#83 Standard	Top socket
136 ANO	Socket-#80 Standard	Bottom socket
137 ANO	Socket-#80 Standard	Top socket
153 ANO	Standard Fastener	Mount standard to floor (Bolt and nut not included)
154 ANO	Shelf Fastener	Fasten shelf to bracket
Packed: 100 per box		

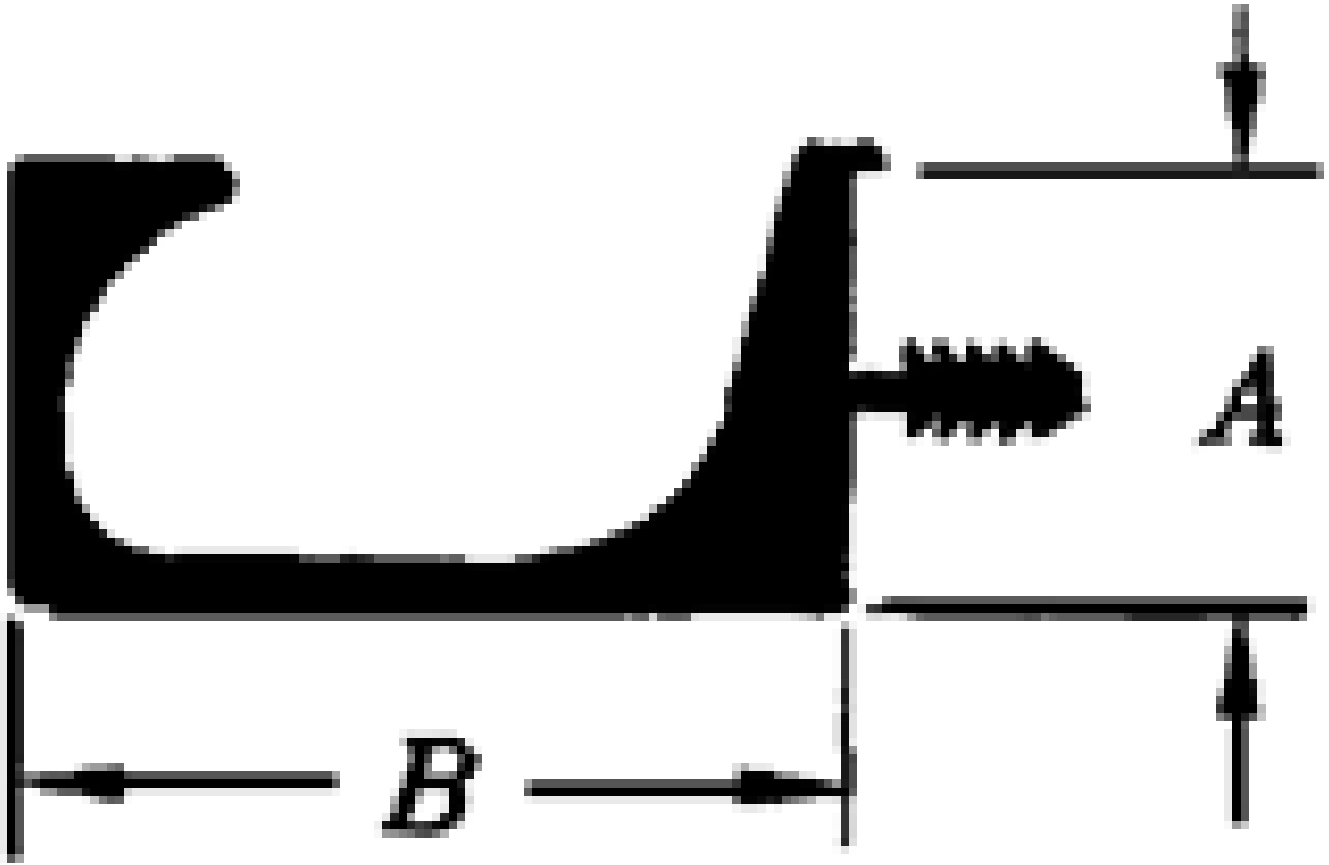
A
B

SALICE 120° HINGE

SALICE 120° HINGE

Popular opening angle easily mounts 3/4" thick doors with neat gaps and good case clearance. 11mm deep metal cup. Compatible with clip-on or slide-on mounting plates.
Possible Boring Distance on the door (K): from 3 to 6mm

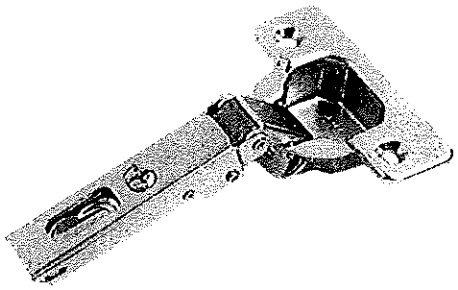

Features:
- Automatic Door Adjustments
- Constant gap between cabinet and front during overlay adjustment of doors (*exclusive* to Salice)
- Available with smooth cam-drive adjustments for height and depth (*exclusive* to Salice)
- ANSI, BHMA rated; ISO 9001. WIC approved

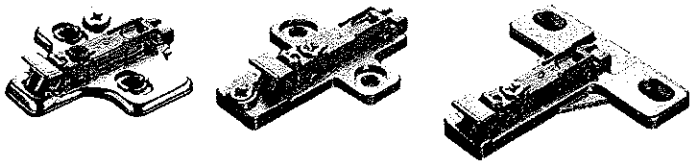

How much space does a door need to open?

Door Clearance												
	T=	16	17	18	19	20	21	22	23	24	25	26
K=3	A=	0.7	0.9	1.1	1.4	2.3	3.8	5.4	6.9	8.5	10	11.5
K=4	A=	0.6	0.9	1.1	1.4	1.7	2.8	4.4	5.9	7.5	9.0	10.5
K=5	A=	0.6	0.8	1.1	1.3	1.6	2.0	3.4	4.9	6.5	8.0	9.5
K=6	A=	0.6	0.8	1.0	1.3	1.6	1.9	2.4	3.9	5.5	7.0	8.5

	T=	16	17	18	19	20	21	22	23	24	25	26
K=3	L=	0.0	0.0	0.0	0.0	0.0	0.4	0.8	1.2	1.6	2.0	3.4
K=4	L=	0.0	0.0	0.0	0.5	0.9	1.3	1.7	2.1	2.5	2.9	3.3
K=5	L=	0.1	0.6	1.0	1.4	1.8	2.2	2.6	3.0	3.4	3.8	4.2
K=6	L=	1.1	1.5	1.9	2.3	2.7	3.1	3.5	3.9	4.3	4.7	5.1

Key

S = thickness of the cabinet side
D = required door overlay
T = max. door thickness
K = drilling distance
A* = reveal
L = gap between door and carcase
H = height of the mounting plate
* either for a single door on the edge of a case or a pair of doors on a common partition

An appropriate molding of the door reduces the values of "A" and "L"

"C" value

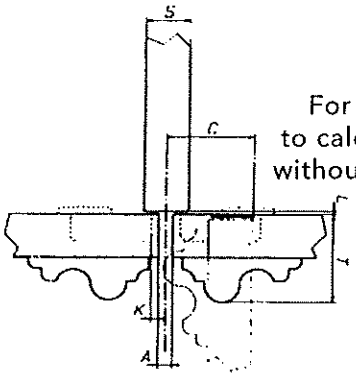

For this application, please use the following formula to calculate the maximum thickness which can be opened without touching the cabinet side or adjacent door, always considering the table of "L-K-T" values

C = 22 + K +A

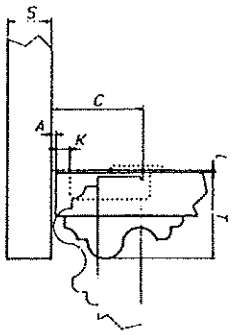

FABRICATION NOTES:

Specifications and Fabrication per Architectural Woodwork Standards Edition 1 10.1.2009

MATERIALS:

Exposed surfaces shall be plastic laminate over ¾" thick formaldehyde-free MDF. Provide PVC edge banding to doors, drawers and face of cabinet body.

Semi-exposed surfaces shall be white melamine over ¾" thick formaldehyde-free MDF. Provide PVC edge banding on all exposed edges.

Drawer Boxes shall be white melamine over ½" formaldehyde-free MDF. Provide PVC edge banding on all exposed edges.

Provide a balancing sheet of .020 inch in thickness to the underside of counter top.

Provide square self edge at nosing.

All Dimensions to be Verified in Field

Sink Openings to be Cut in Field

Grommet Holes to be Cut in Field

Cabinets Can Not be Manufactured Until Appliance Dimensions Are Verified

Casework Anchorage per Architects Detailed Drawings

HARDWARE SCHEDULE:

Description	Manufacture	Mfgr#	Finish	Remarks
Hinges	Salice	C2R9A99		120 degree, self-closing
Pulls	Paramounts Exterior	5122	Matt Chrome	
Slides	Accuride	3832B	Zinc	100 lb, fullextension
Standards	Hafele	KV 85	Anochrome	

FINISH SCHEDULE:

PL - 1 PLASTIC LAMINATE COLOR T.B.D.
PL - 2 PLASTIC LAMINATE COLOR T.B.D.
SS - 1 SOLID SURFACE COLOR T.B.D.
RS - 1 3FORM, CHROMA, GHOST
RS - 3 3FORM, CHROMA, FLOOD + GHOST
RB - 1 RUBBER BASE

Add furred low sill for RO water loop per field discussions. See 5/AS9.04, width to match this detail (6-13/16")

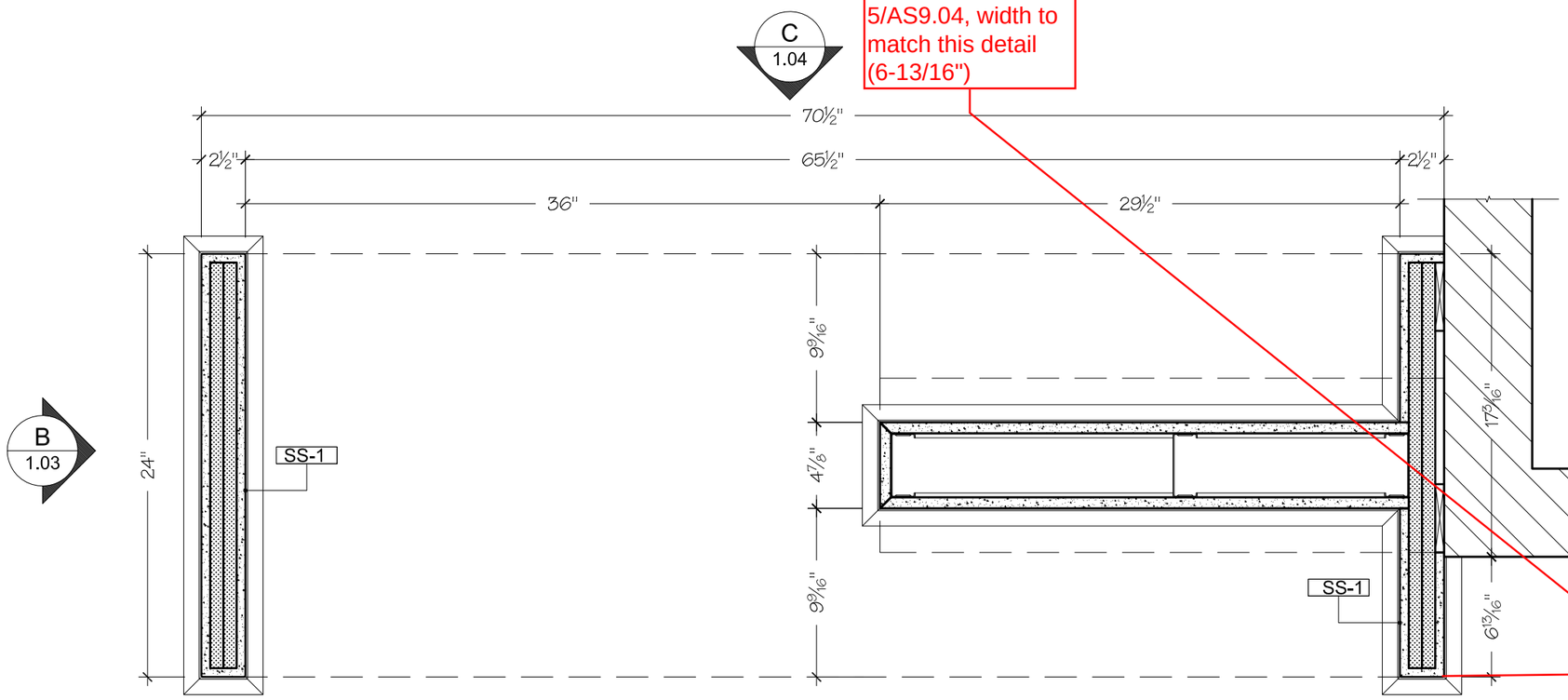

A
1.03

1 PLAN

SCALE: 1-1/2" = 1'- 0"

CUBICLES 1,2
ARCH:10/AS-4.02

Return low sill for RO loop to exterior wall furring. Coordinate in the field with Contractor.

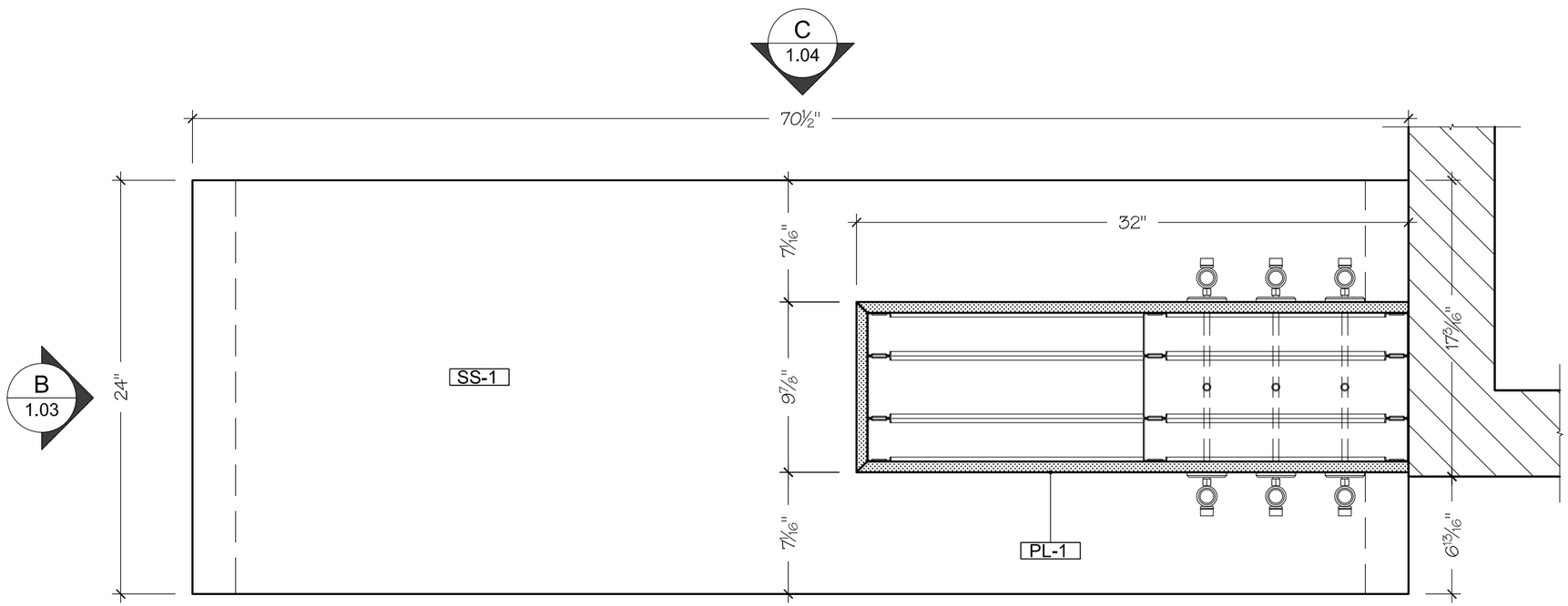

A
1.03

2 PLAN

SCALE: 1-1/2" = 1'- 0" CUBICLES 1,2

ARCH:10/AS-4.02

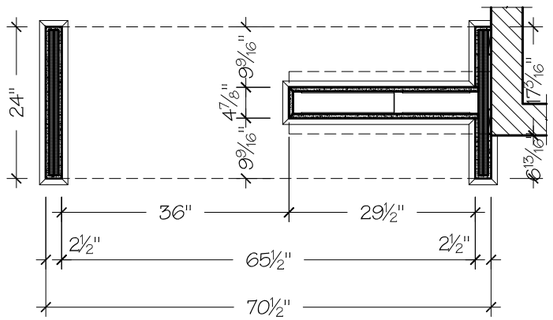

A 1.03

PLAN

SCALE: 1/2" = 1'- 0"

CUBICLES 1,2
ARCH:10/AS-4.02

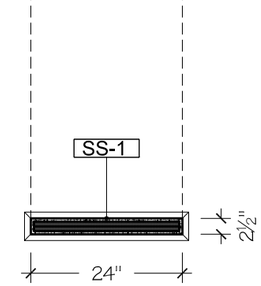

B 1.03

PLAN

SCALE: 1/2" = 1'- 0"

CUBICLES 1,2
ARCH:10/AS-4.02

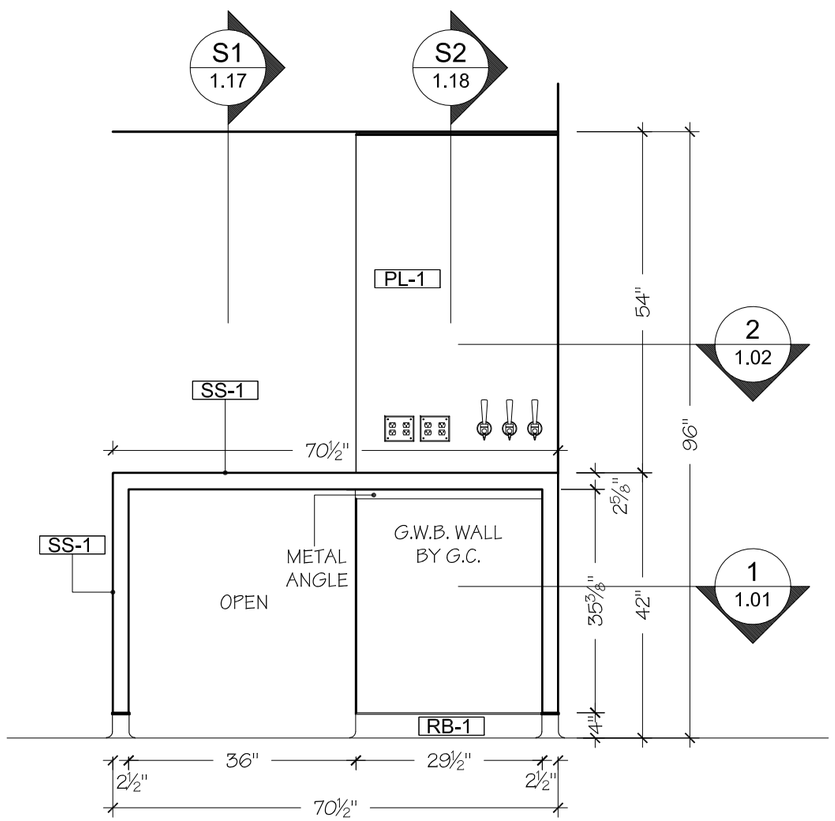

A

ELEVATION

SCALE: 1/2" = 1'- 0"

CUBICLES 1,2
ARCH:13/AS-4.02

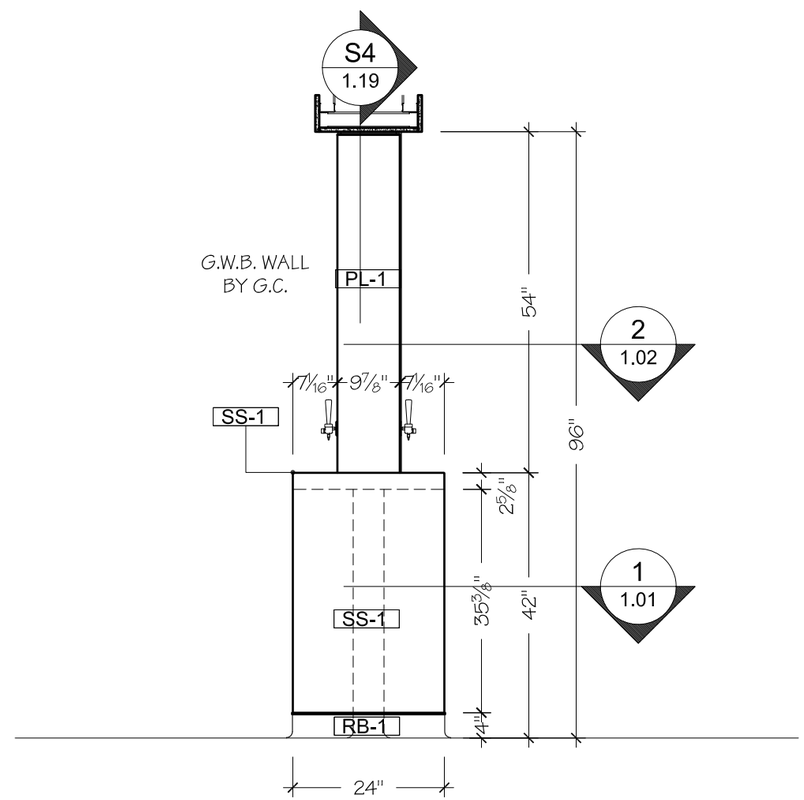

B

ELEVATION

SCALE: 1/2" = 1'- 0"

CUBICLES 1,2
ARCH:12/AS-4.02

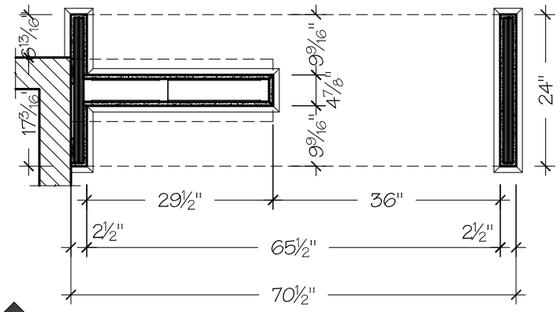

C
1.04

PLAN

SCALE: 1/2" = 1'- 0"

CUBICLES 1,2
ARCH:10/AS-4.02

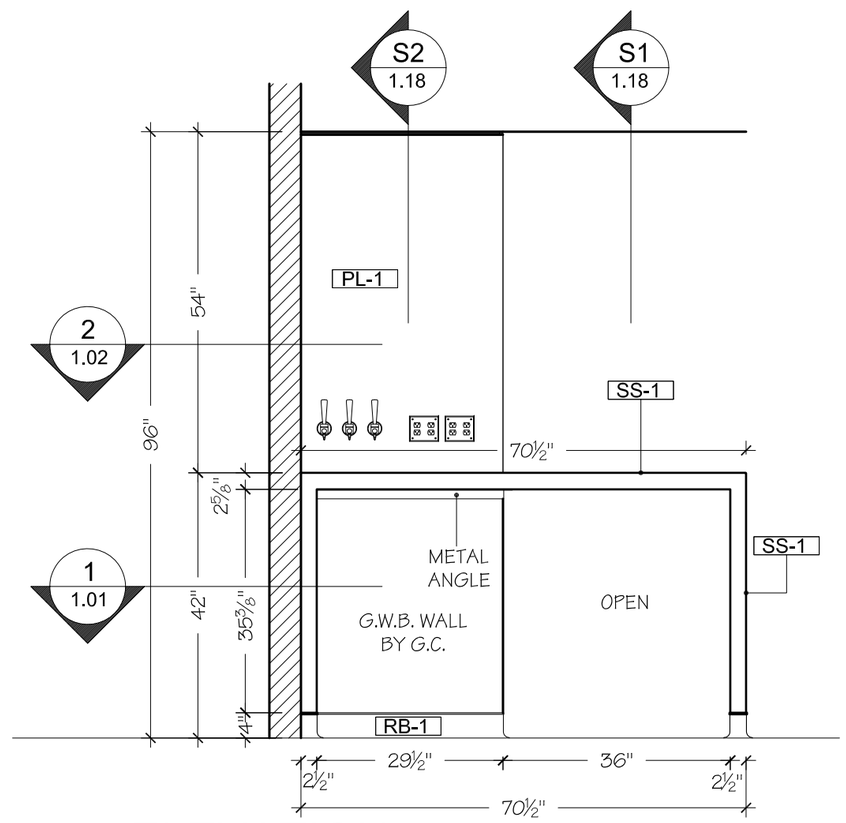

C

ELEVATION

SCALE: 1/2" = 1'- 0"

CUBICLES 1,2

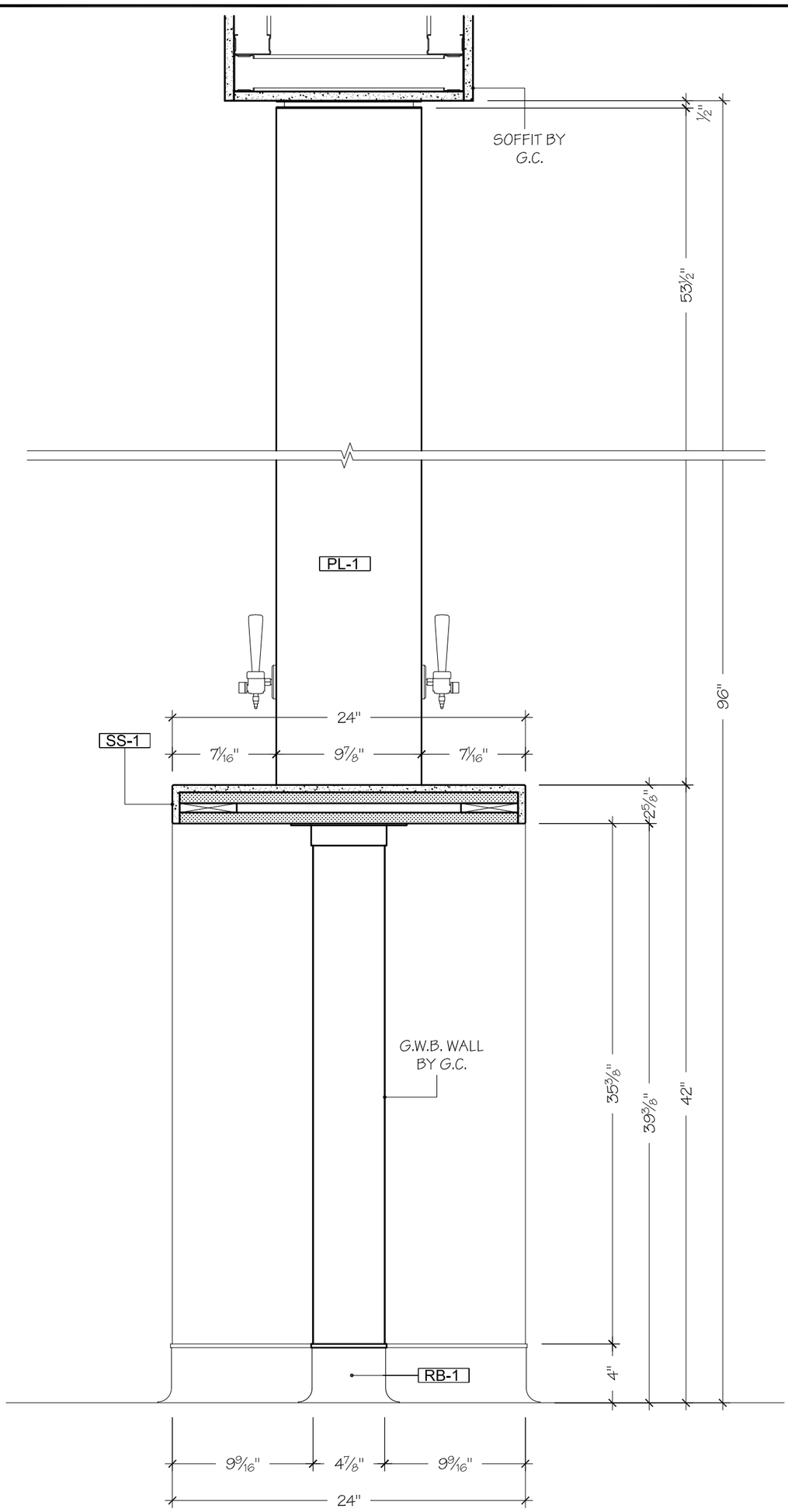

TYPICAL
SECTION

S1

SCALE: 1 1/2"=1'-0"

CUBICLES 1,2,3,4

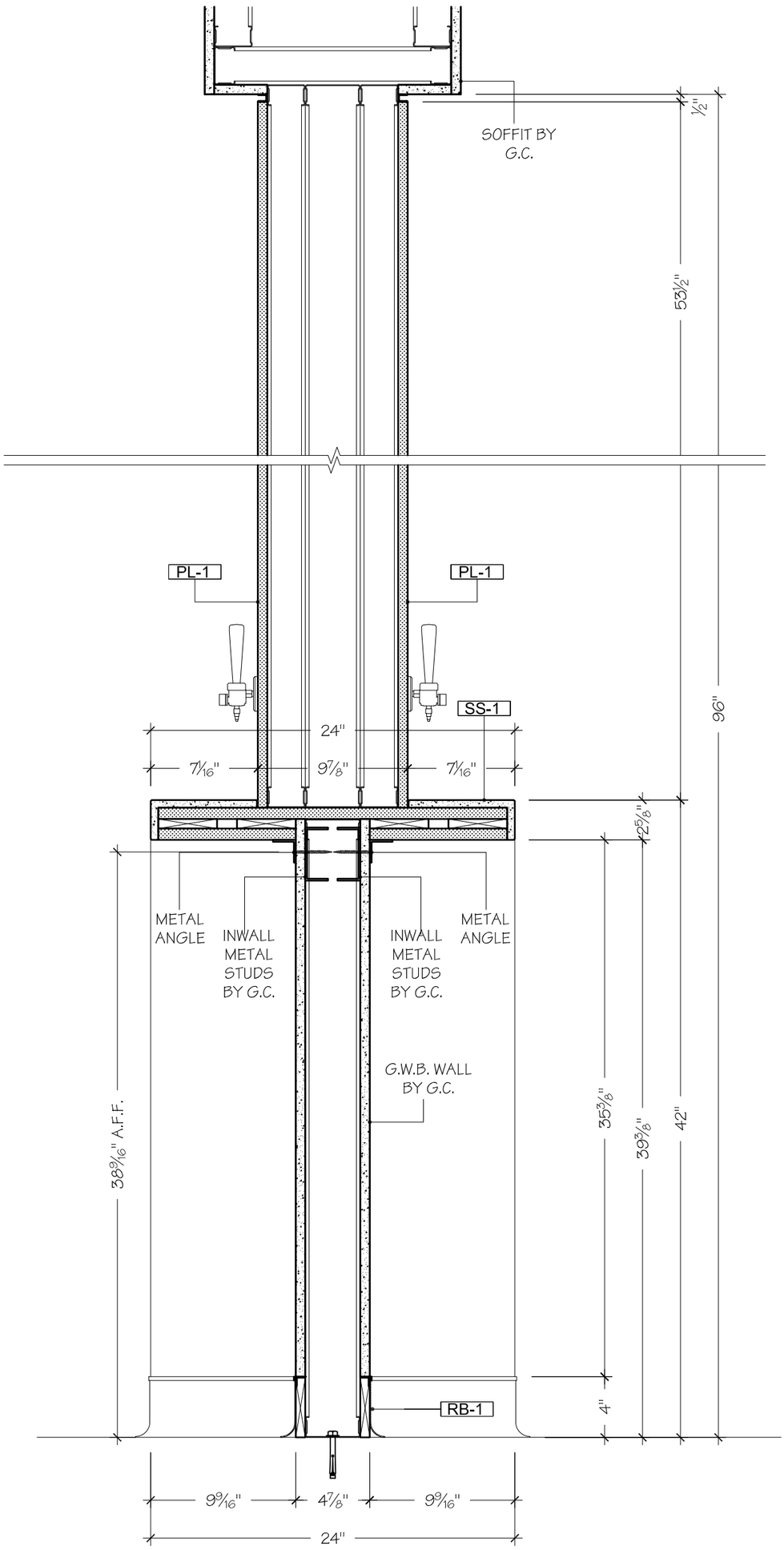

TYPICAL
SECTION
S2

SCALE: 1 1/2"=1'-0"

CUBICLES 1,2,3,4
ARCH:7/AS-9.05

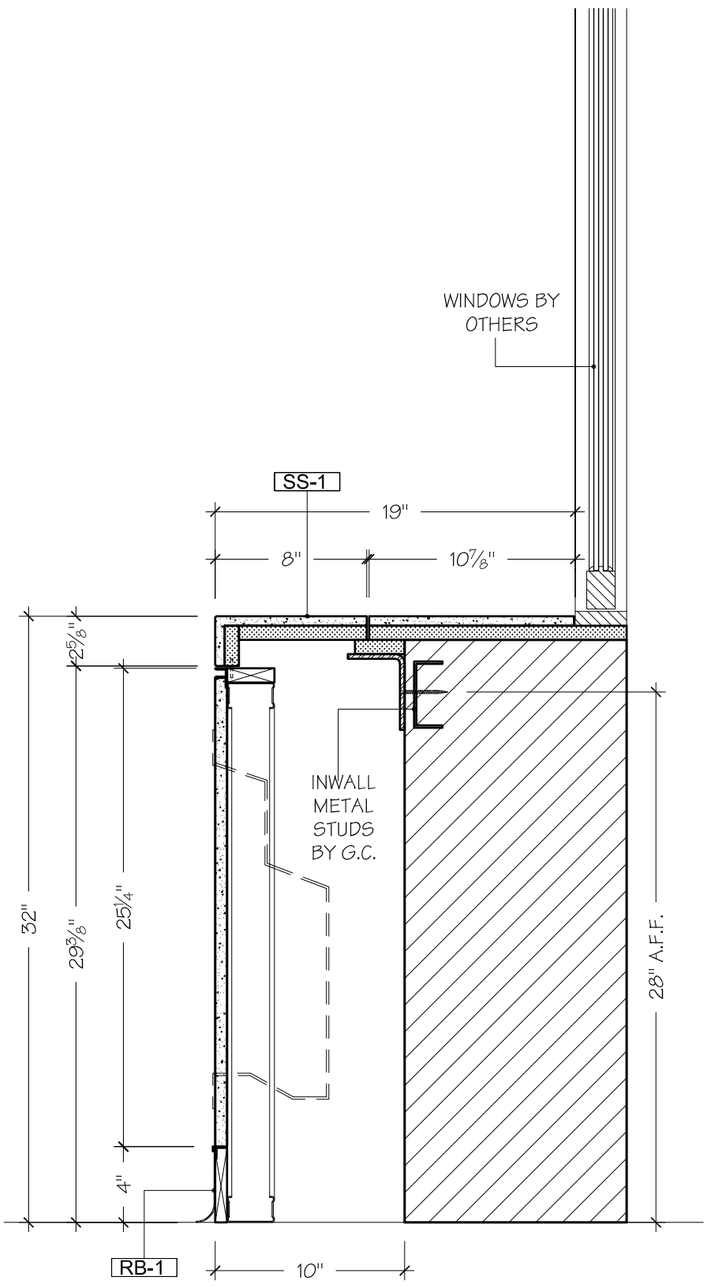

S3 TYPICAL
SECTION
SCALE: 1 1/2"=1'-0"

CUBICLES 3,4
ARCH:7/AS-9.05

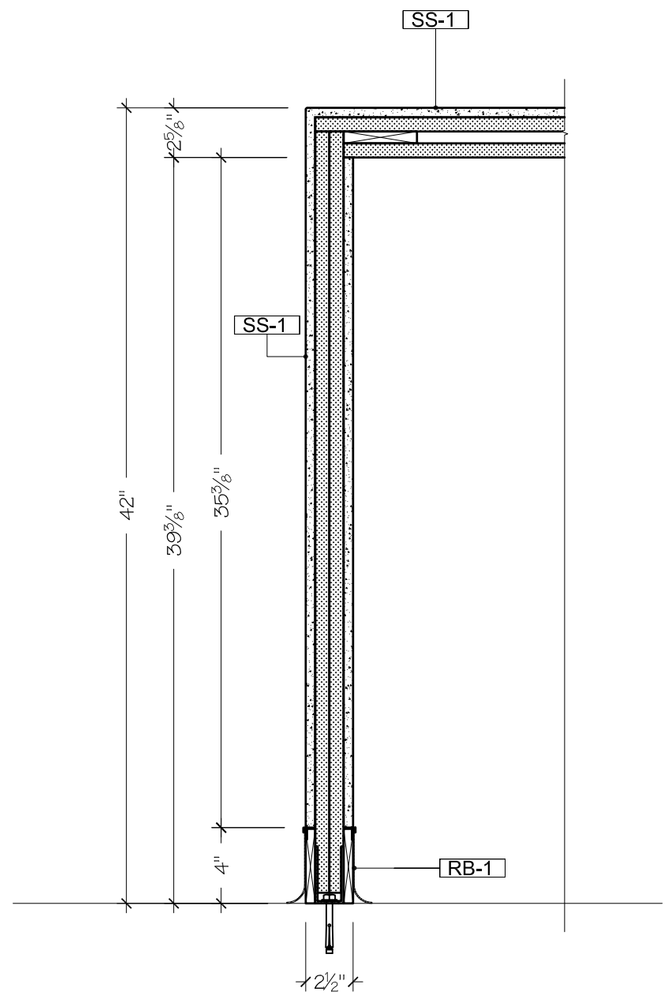

S4 TYPICAL
SECTION
SCALE: 1 1/2"=1'-0"

CUBICLES 1,2,3,4
ARCH:7/AS-9.05

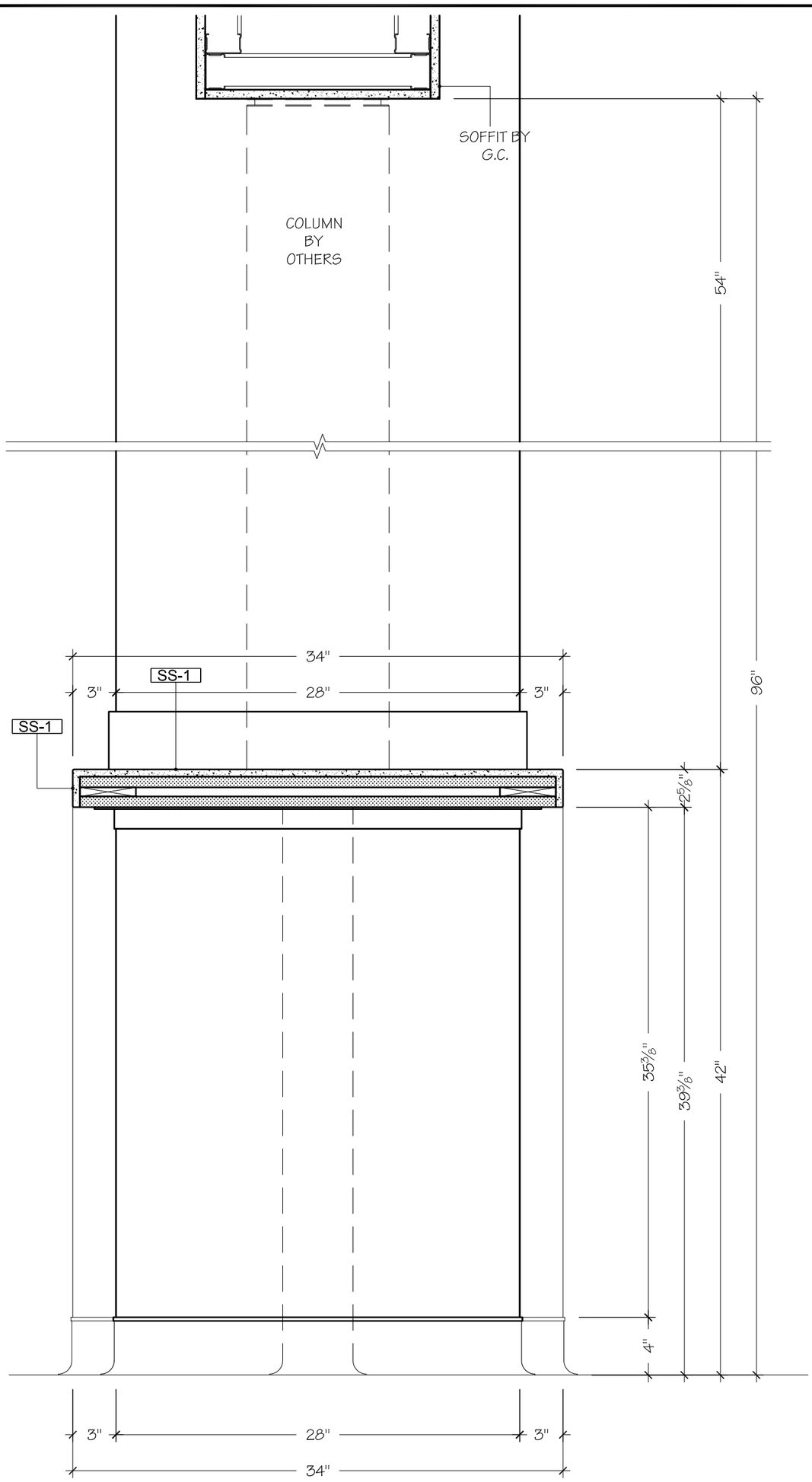

TYPICAL
S5 SECTION

SCALE: 1 1/2"=1'-0"

CUBICLES 5,6,9,10
ARCH:7/AS-9.05

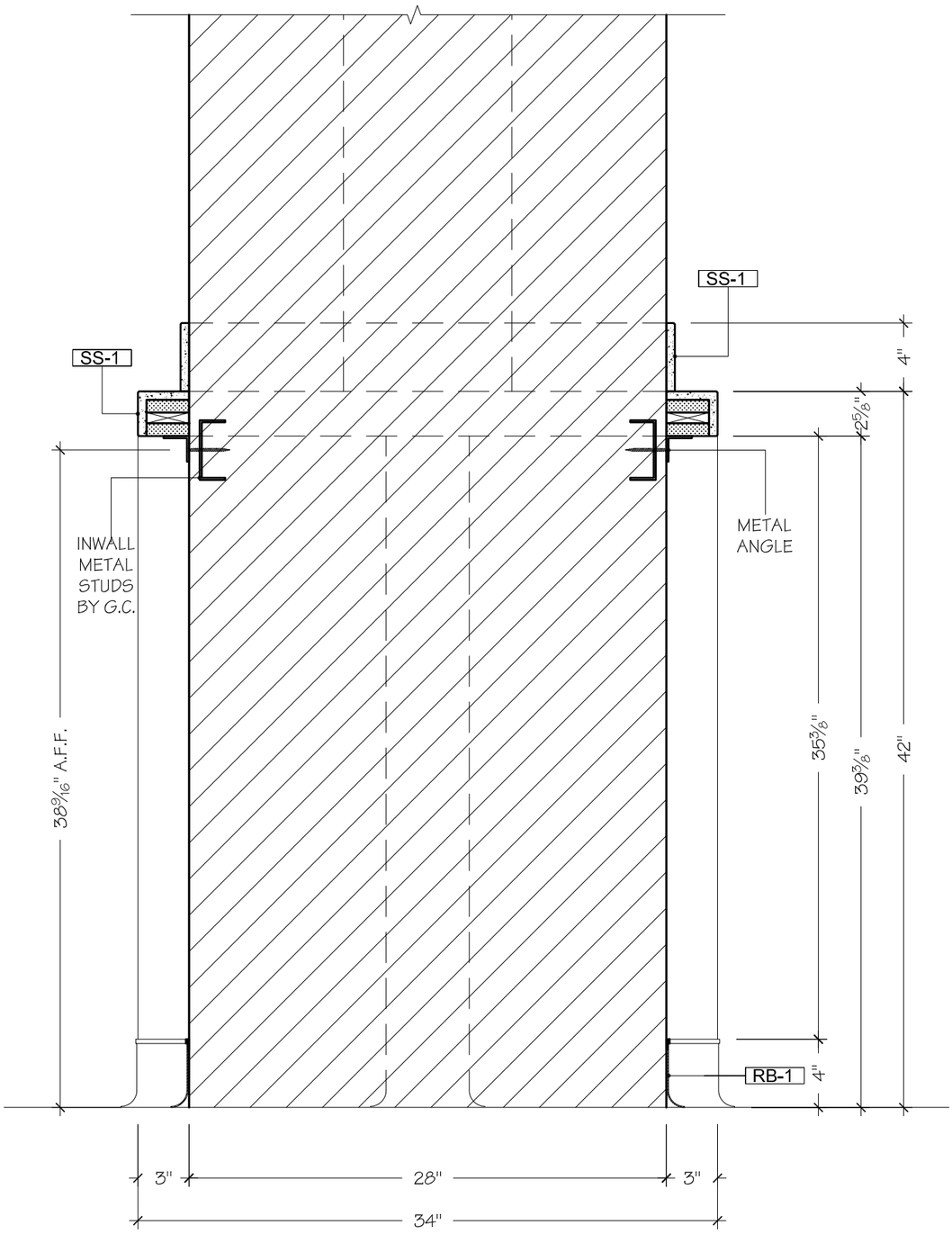

TYPICAL
SECTION
S6

SCALE: 1 1/2"=1'-0"

CUBICLES 5,6,9,10
ARCH:7/AS-9.05

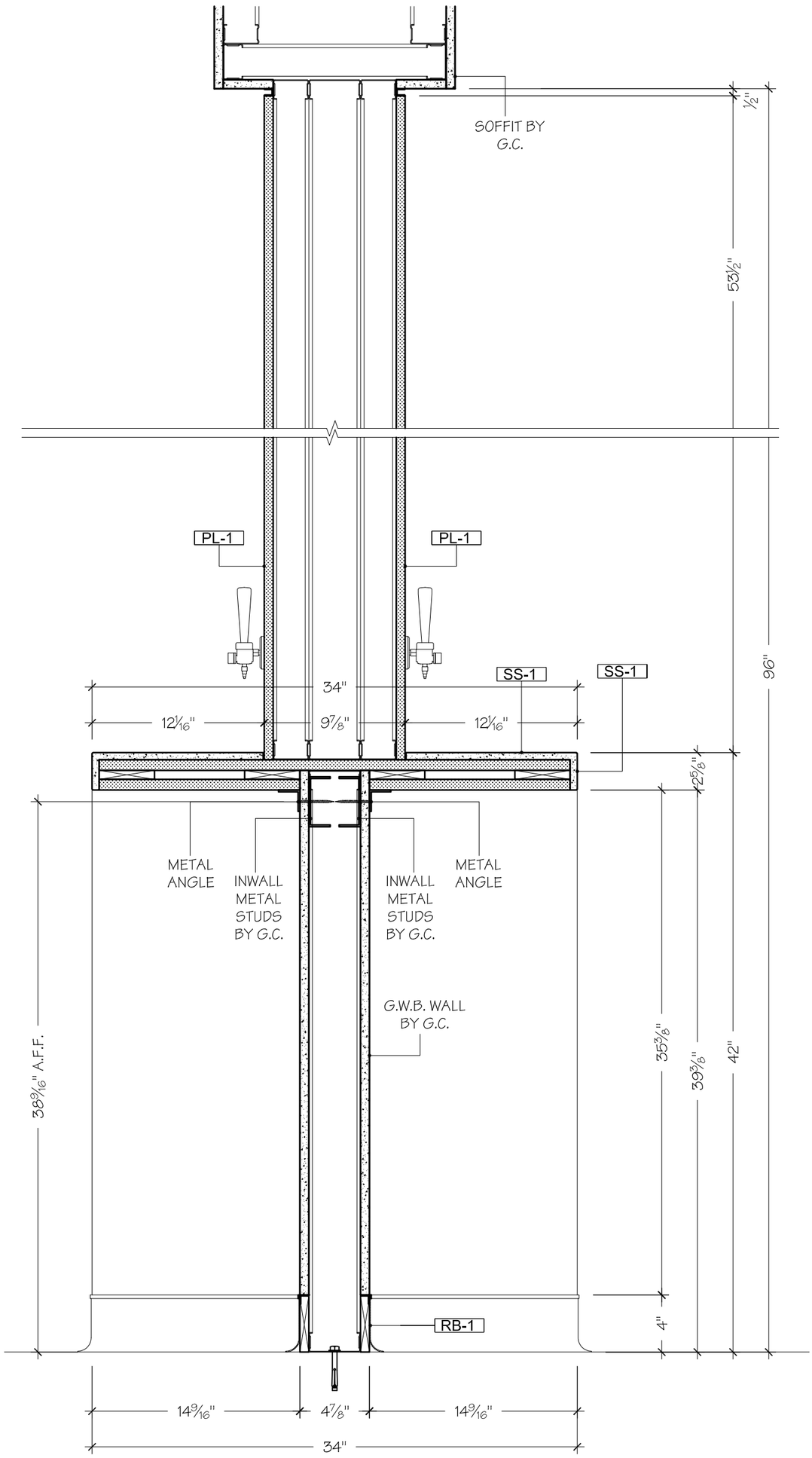

TYPICAL
SECTION
S7

SCALE: 1 1/2"=1'-0"

CUBICLES 5,6,9,10
ARCH:7/AS-9.05

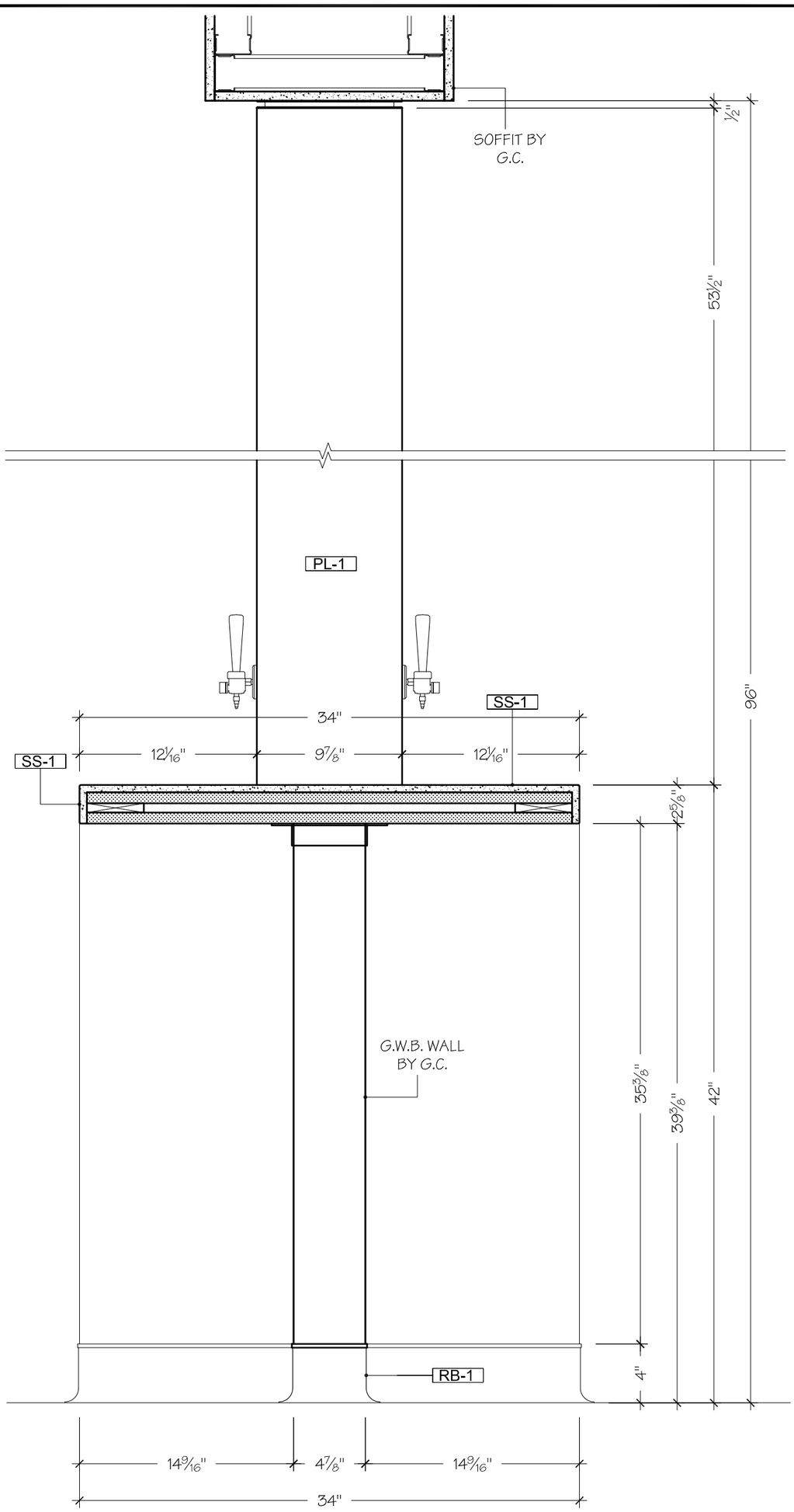

TYPICAL
SECTION

S8

SCALE: 1 1/2"=1'-0"

CUBICLES 1,2,3,4
ARCH:7/AS-9.05

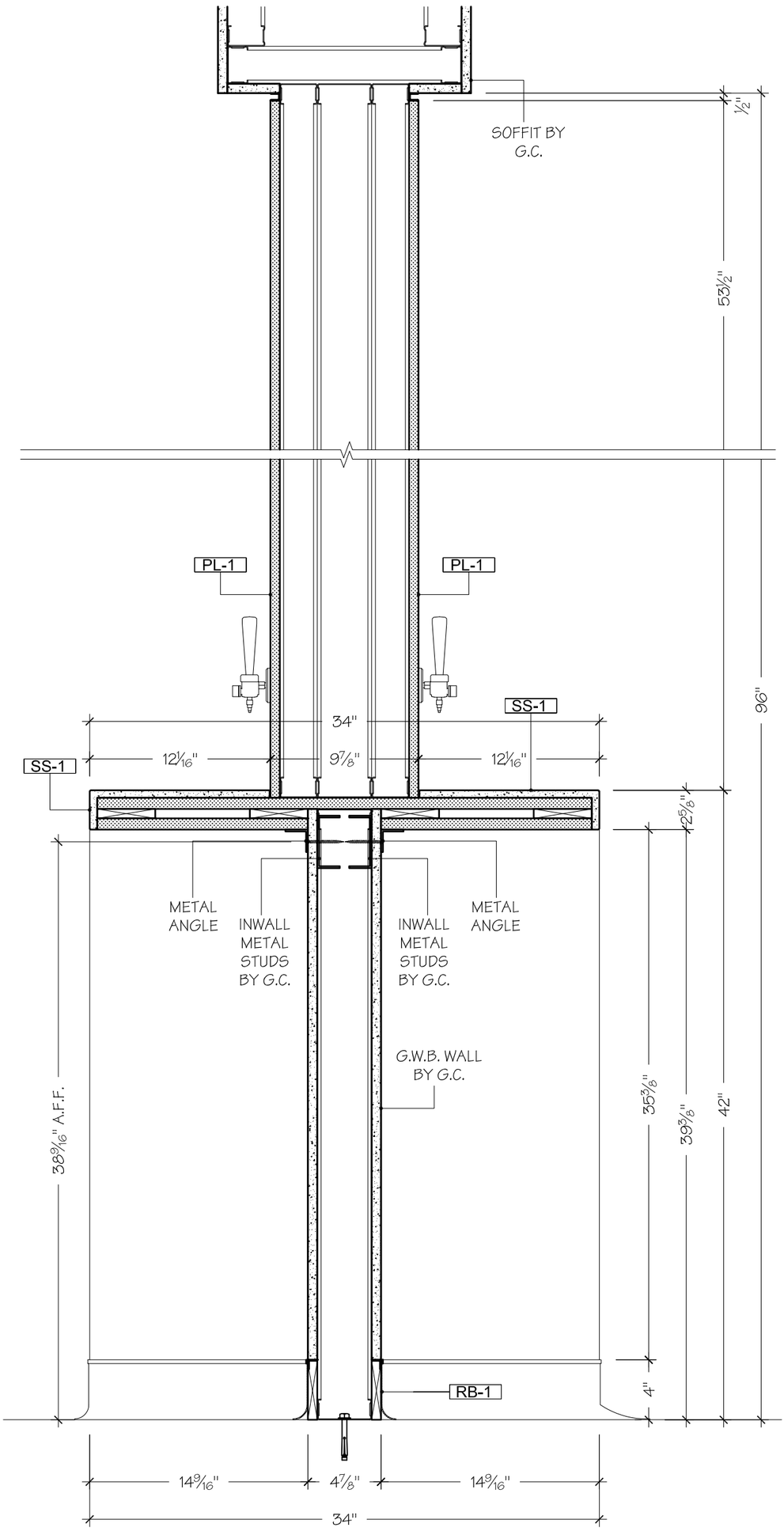

TYPICAL
SECTION

S9

SCALE: 1 1/2"=1'-0"

CUBICLES 1,2,3,4
ARCH:7/AS-9.05

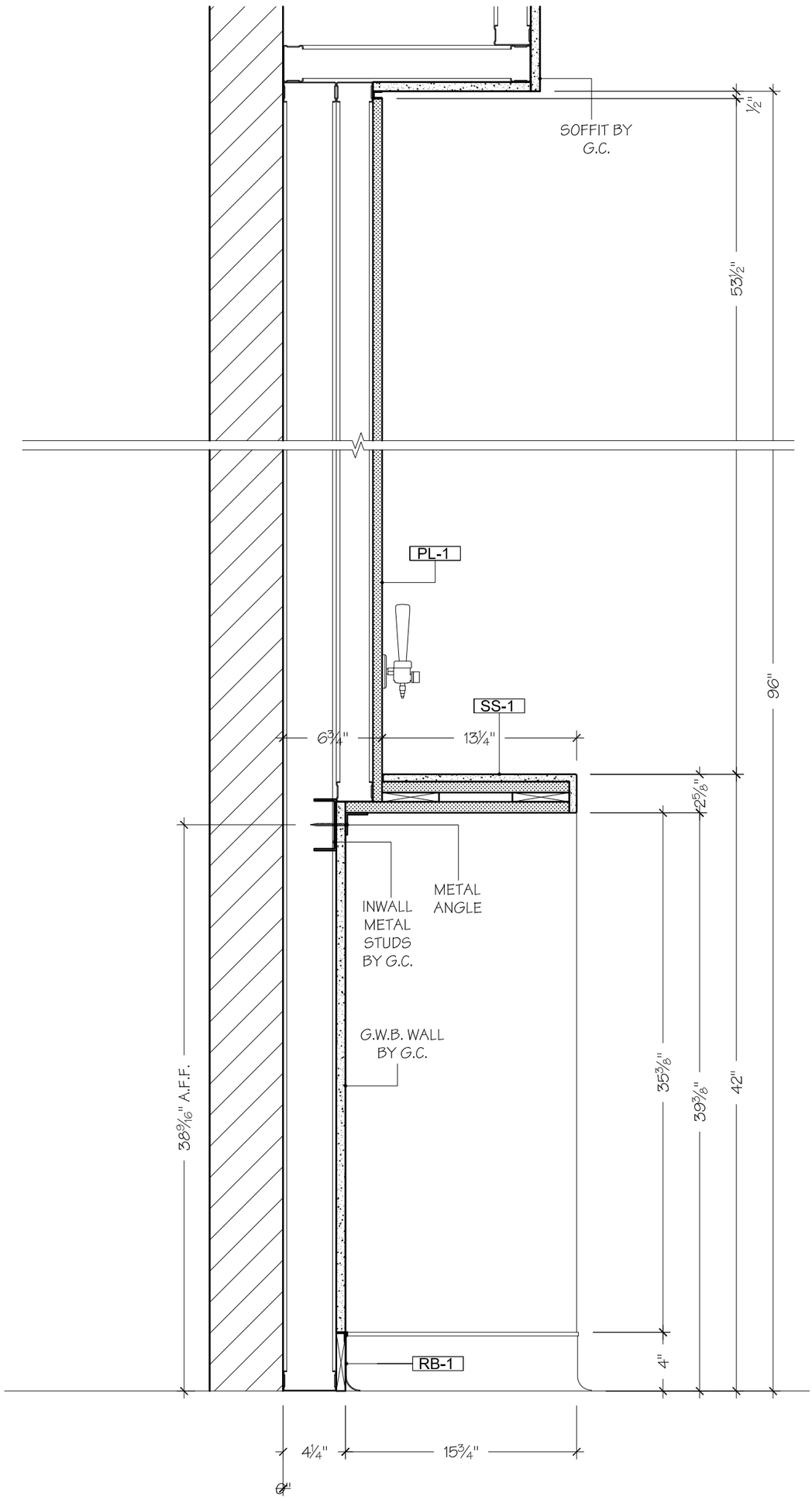

TYPICAL
SECTION
S10
SCALE: 1 1/2"=1'-0"

CUBICLES 11
ARCH:7/AS-9.05

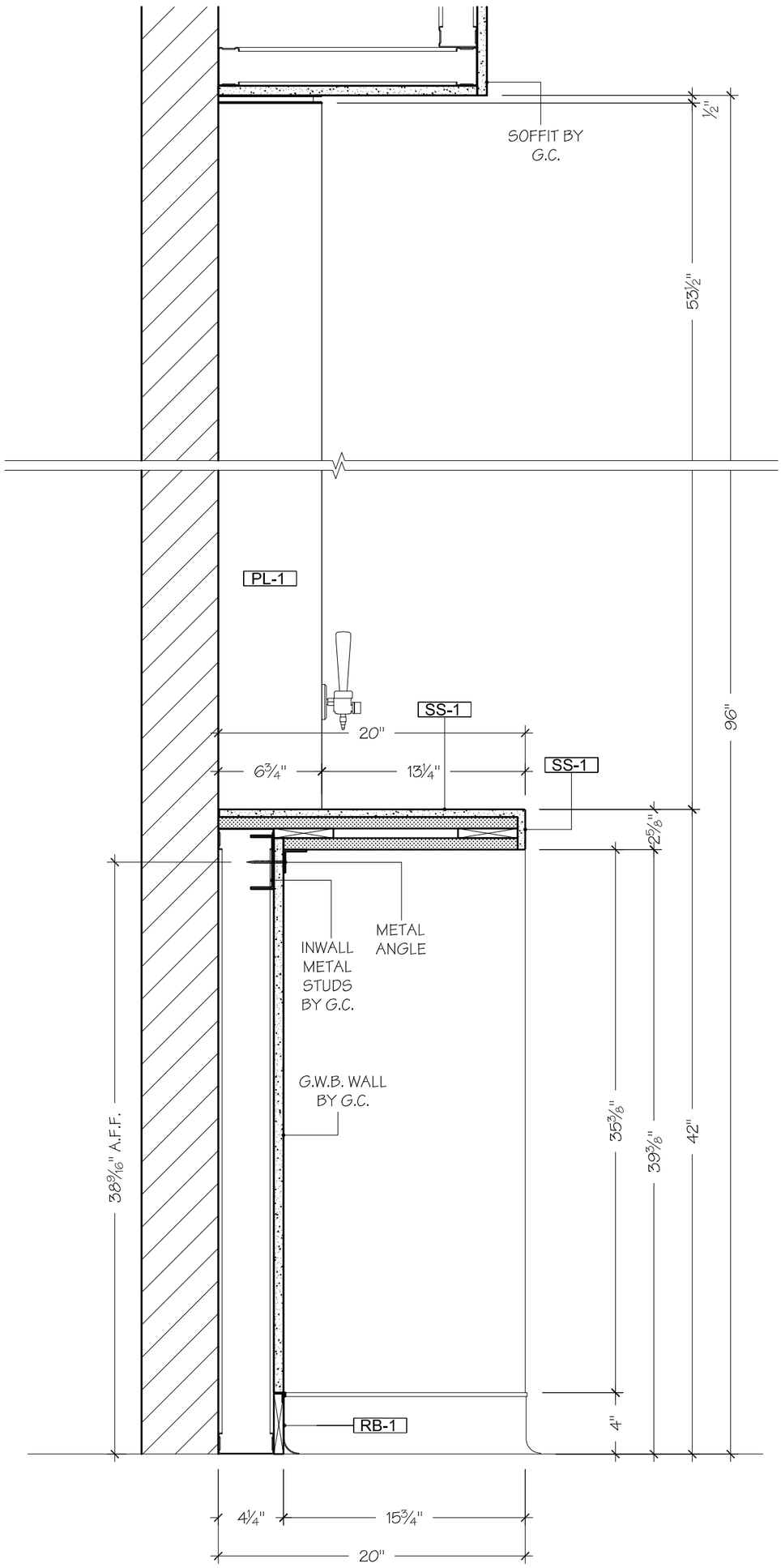

TYPICAL
SECTION
S11

SCALE: 1 1/2"=1'-0"

CUBICLES 11
ARCH:7/AS-9.05

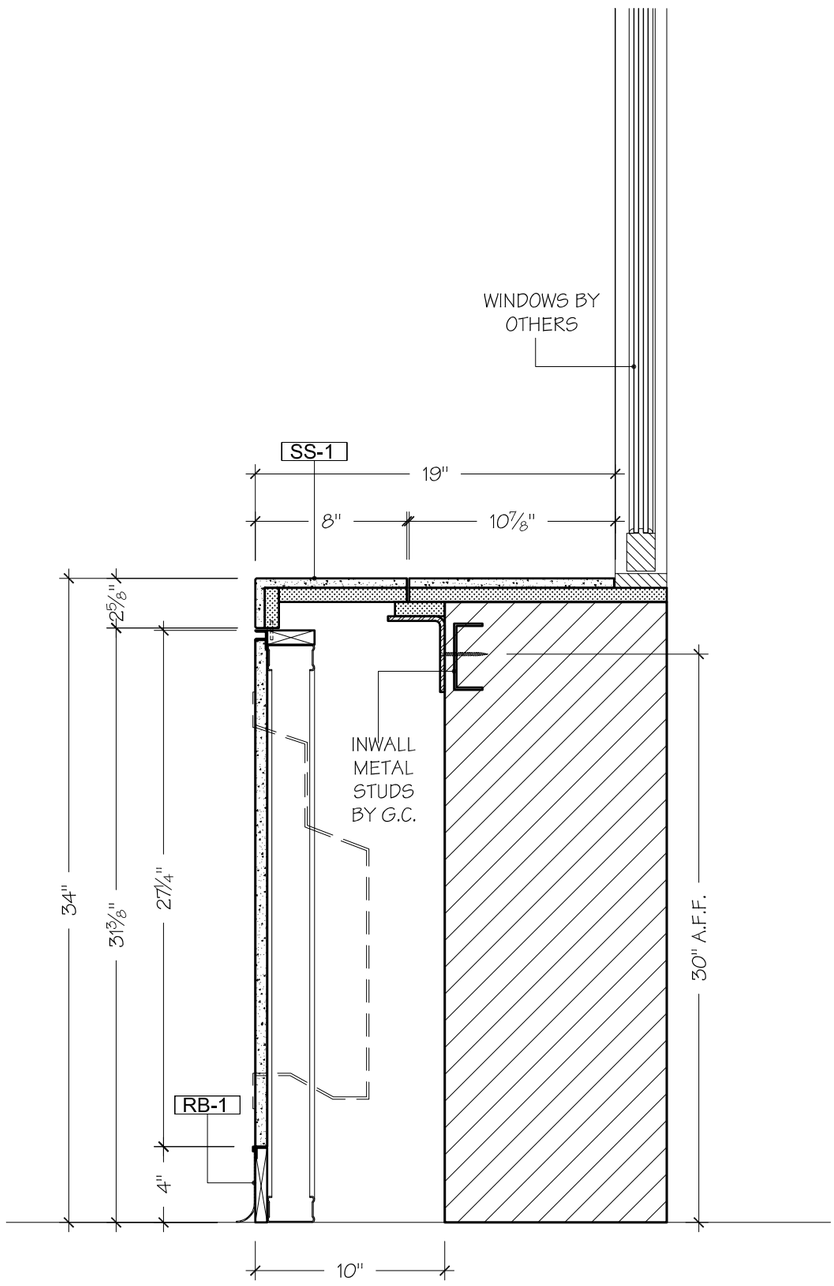

TYPICAL
SECTION
S12

SCALE: 1 1/2"=1'-0" CUBICLES 5,6,7,8,9,10
ARCH:7/AS-9.05

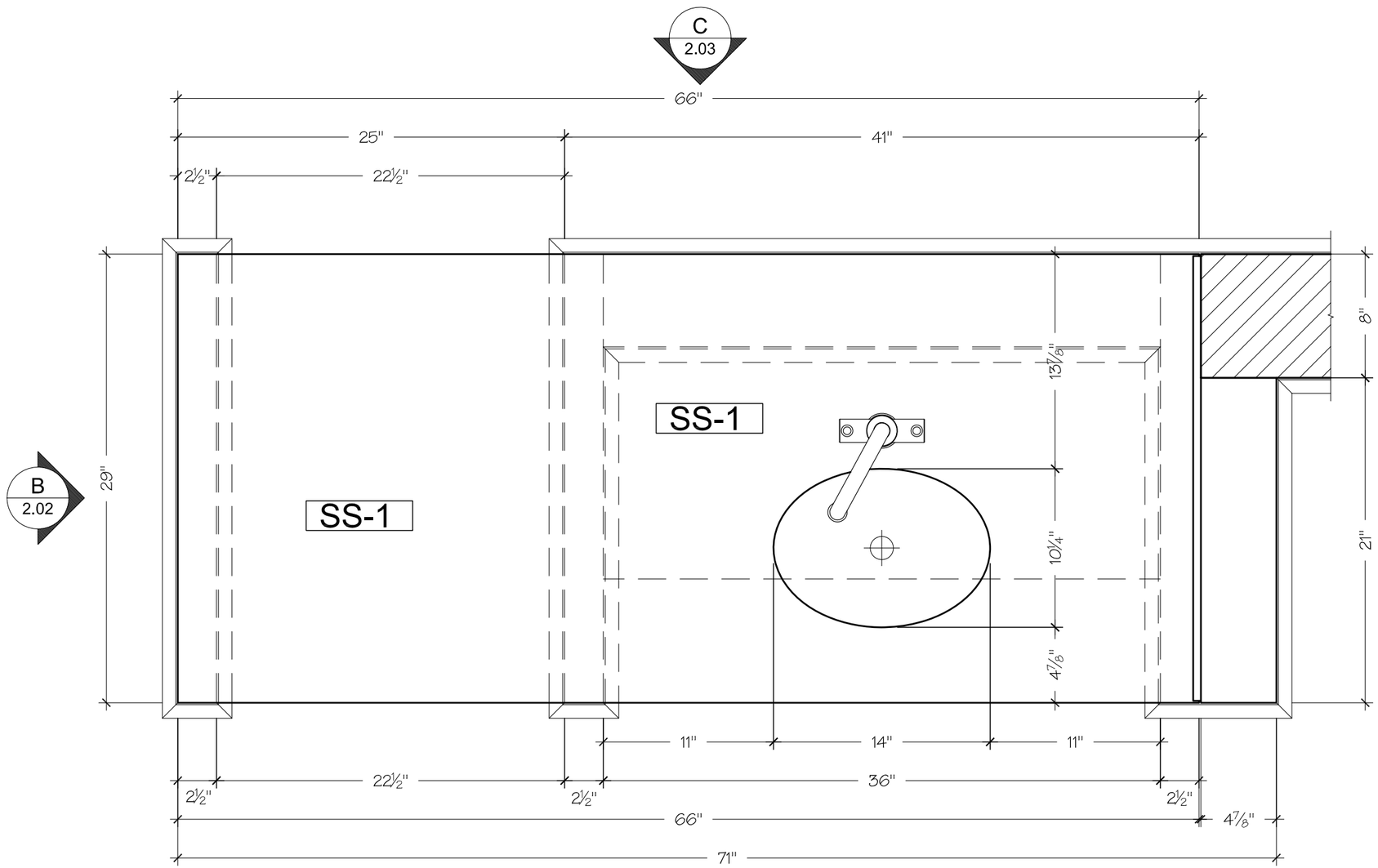

A 2.02 1 PLAN

SCALE: 3/4" = 1'- 0"

ISLAND SINK
ARCH:1/AS-2.10

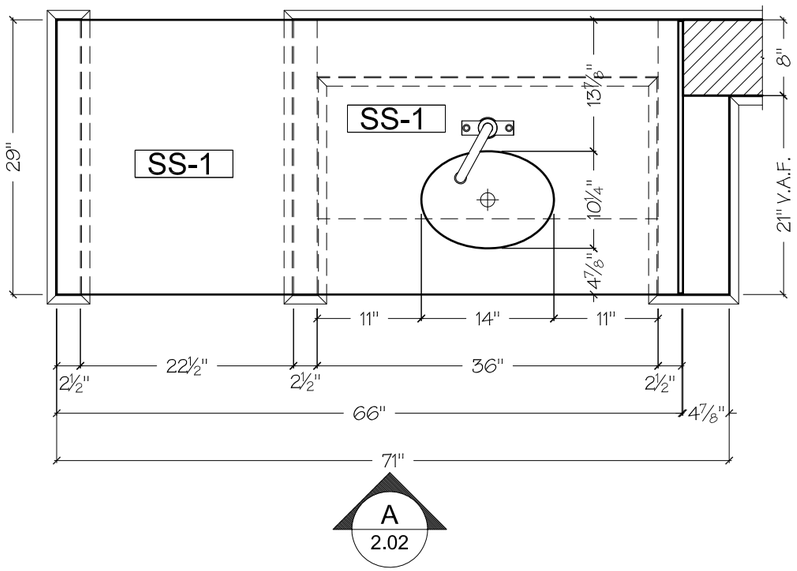

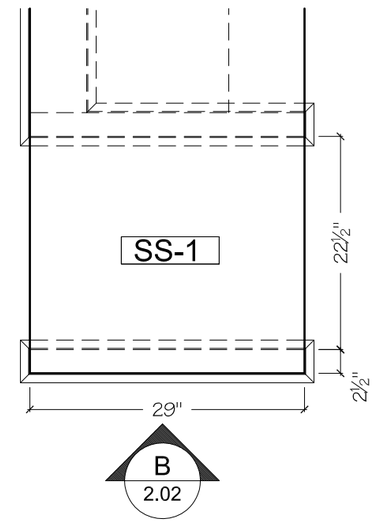

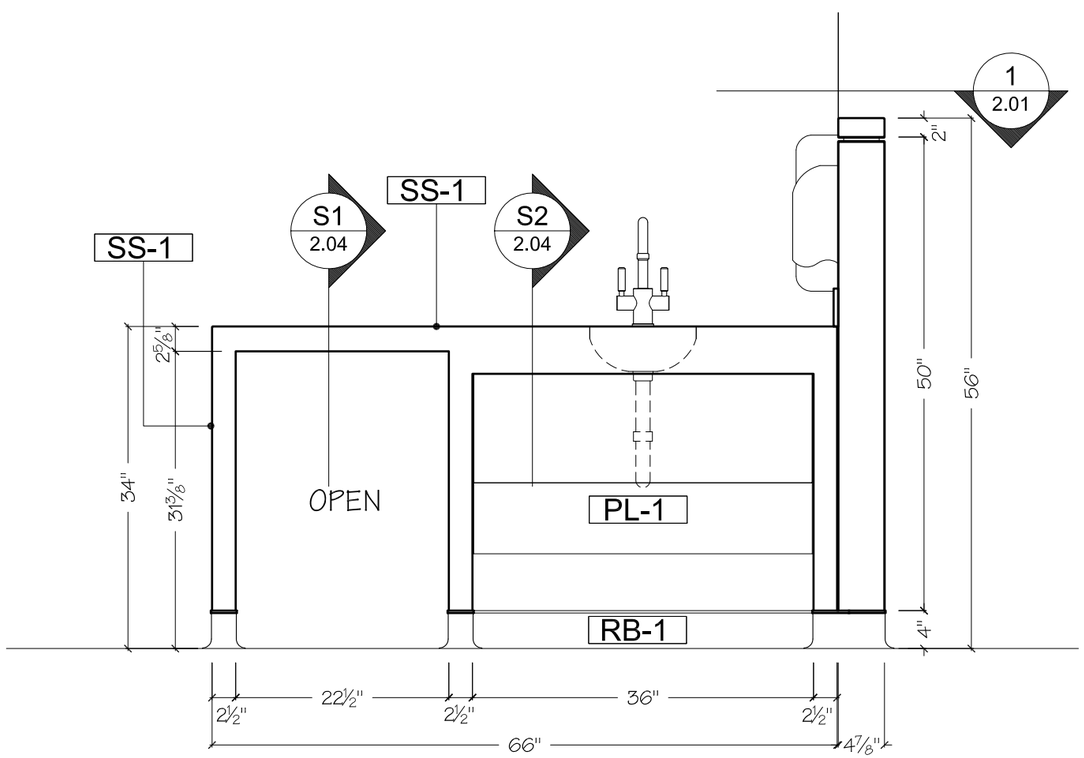

A ELEVATION

SCALE: 1" = 1'- 0"

ISLAND SINK

ARCH:10/AS-4.03

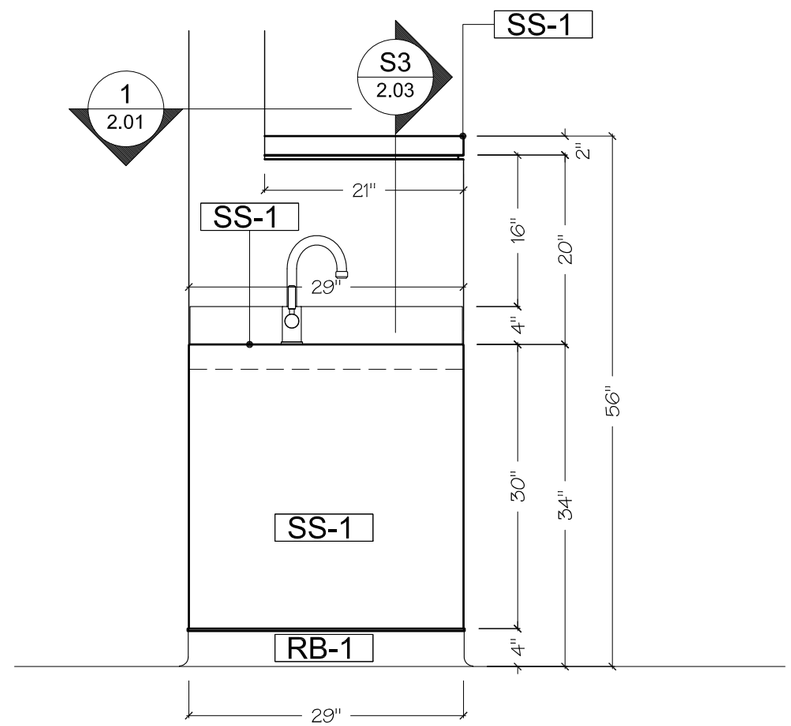

B ELEVATION

SCALE: 1/2" = 1'- 0"

ISLAND SINK

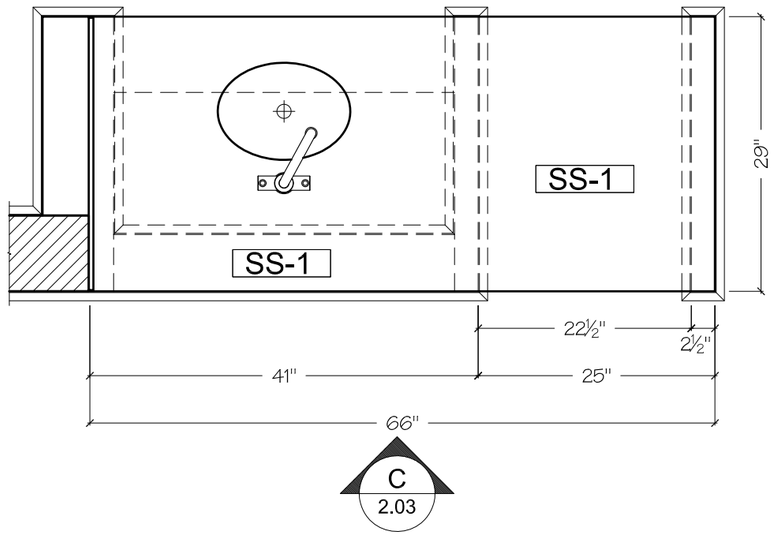

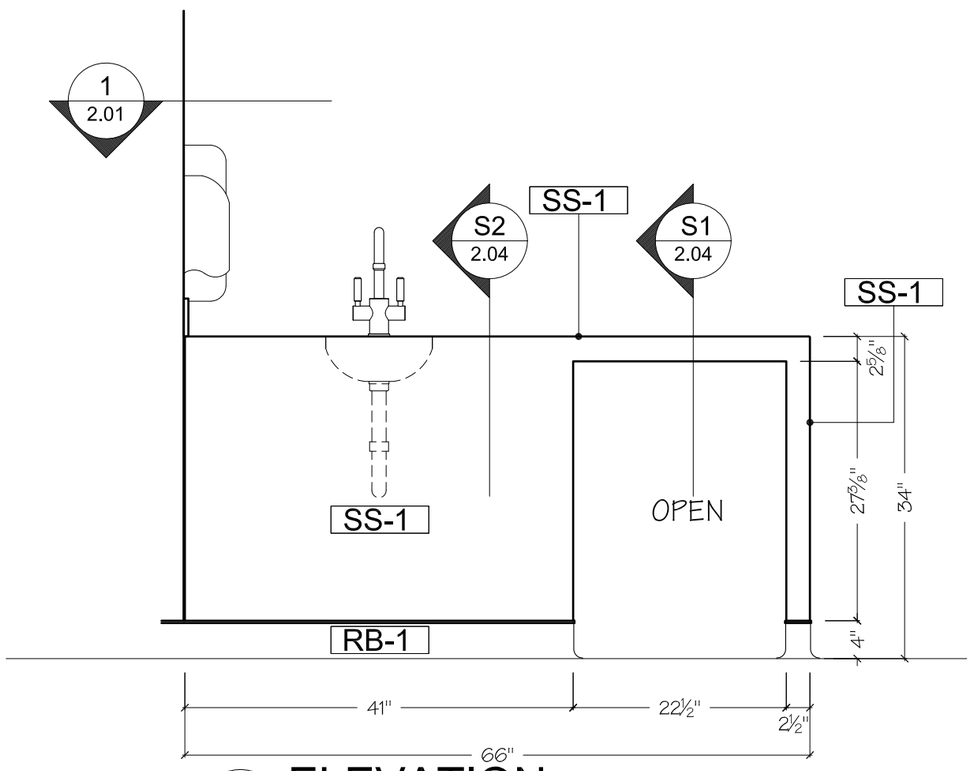

C ELEVATION

SCALE: 1/2" = 1'- 0"

ISLAND SINK

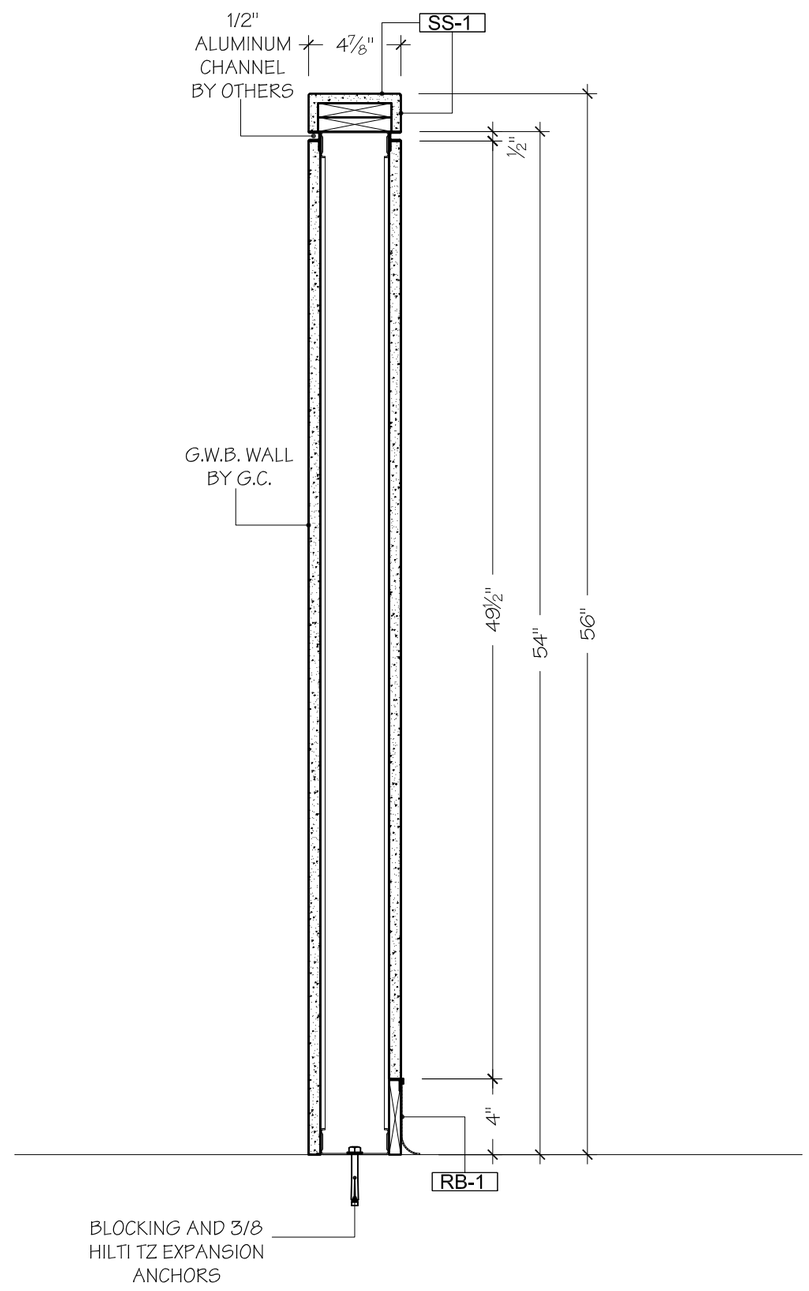

TYPICAL

S3 SECTION

SCALE: 1 1/2"=1'-0"

ISLAND SINK

ARCH:18/AS-9.04

MILL AND FIXTURE INC.

37523 SYCAMORE STREET
NEWARK, CALIFORNIA 94560
(510) 713-0430 FAX (510) 713-0436

JOB NAME: VA PALO ALTO DIALYSIS SUITE RENOVATION

JOB ADDRESS: VAMC PALO ALTO, VAPAHCS 3801 MIRANDA AVENUE PALO ALTO, CA 94304

CONTRACTOR: PATRIOT CONSTRUCTION

ARCHITECT: THE DESIGN PARTNERSHIP LLP

NO.	REVISION	DATE

JOB NO: 13323

SCALE: AS NOTED

DATE: 12/04/2013

DRAWN BY: ZG

CHECKED BY: GA

SHEET 2.03

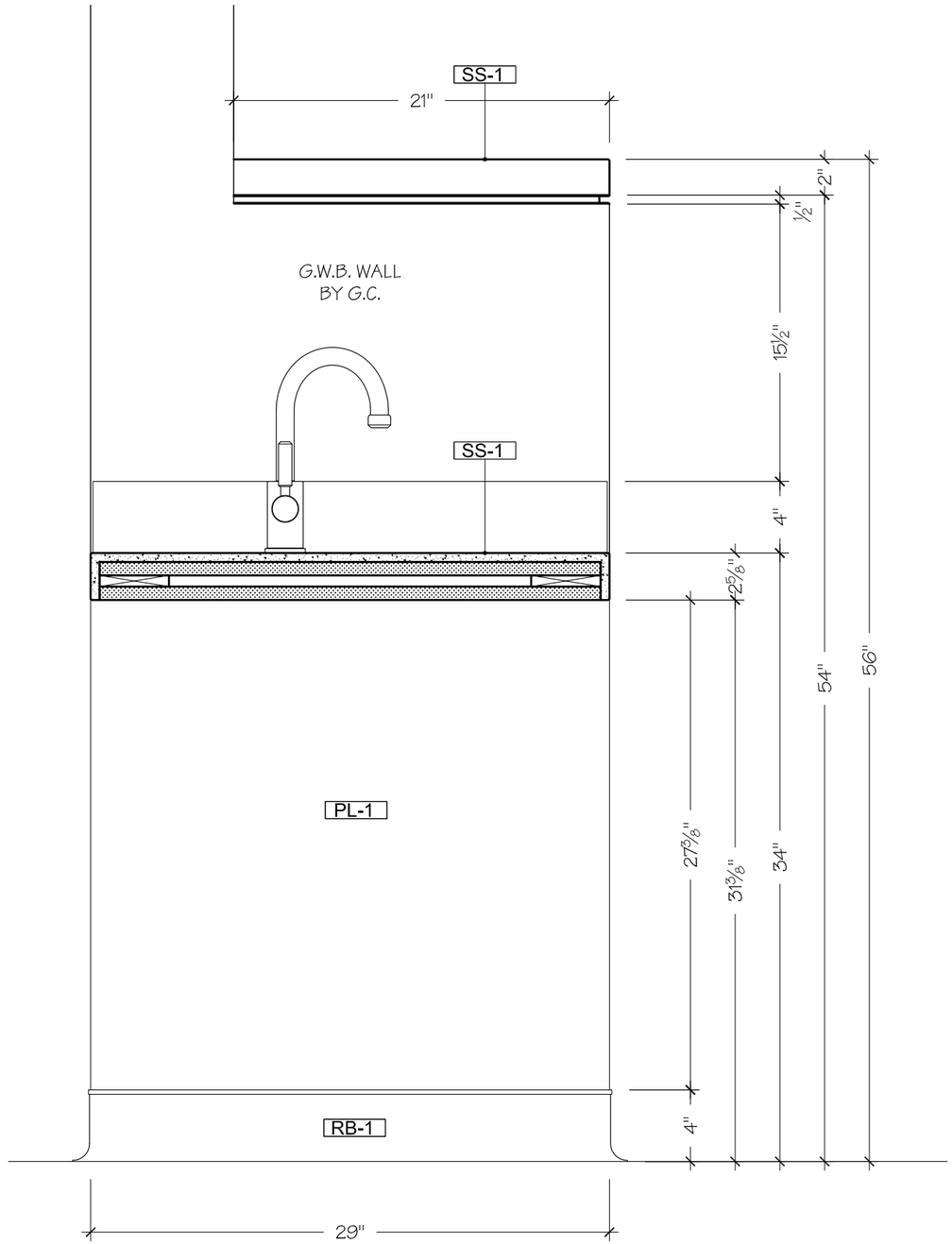

TYPICAL
S1 SECTION
SCALE: 1 1/2"=1'-0"

ISLAND SINK

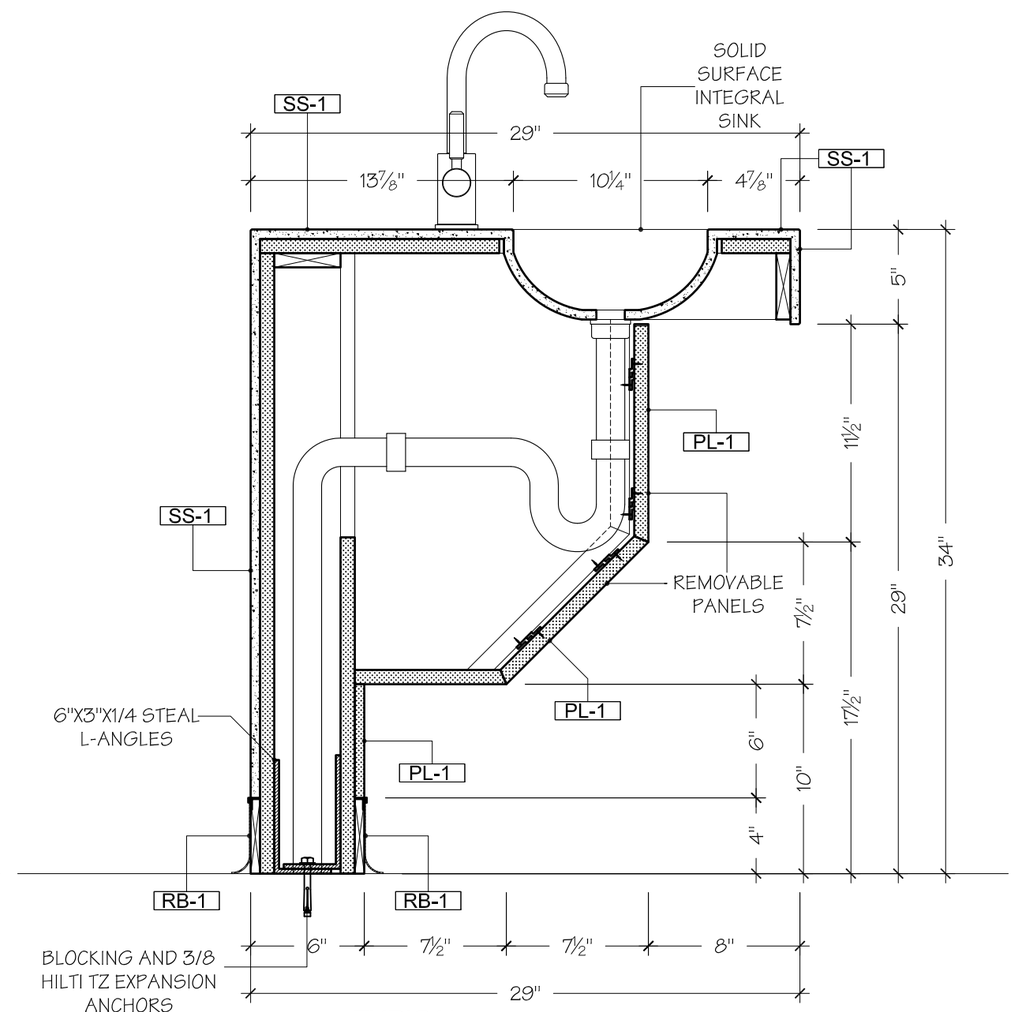

TYPICAL
S2 SECTION
SCALE: 1 1/2"=1'-0"

ISLAND SINK
ARCH:9/AS-9.05

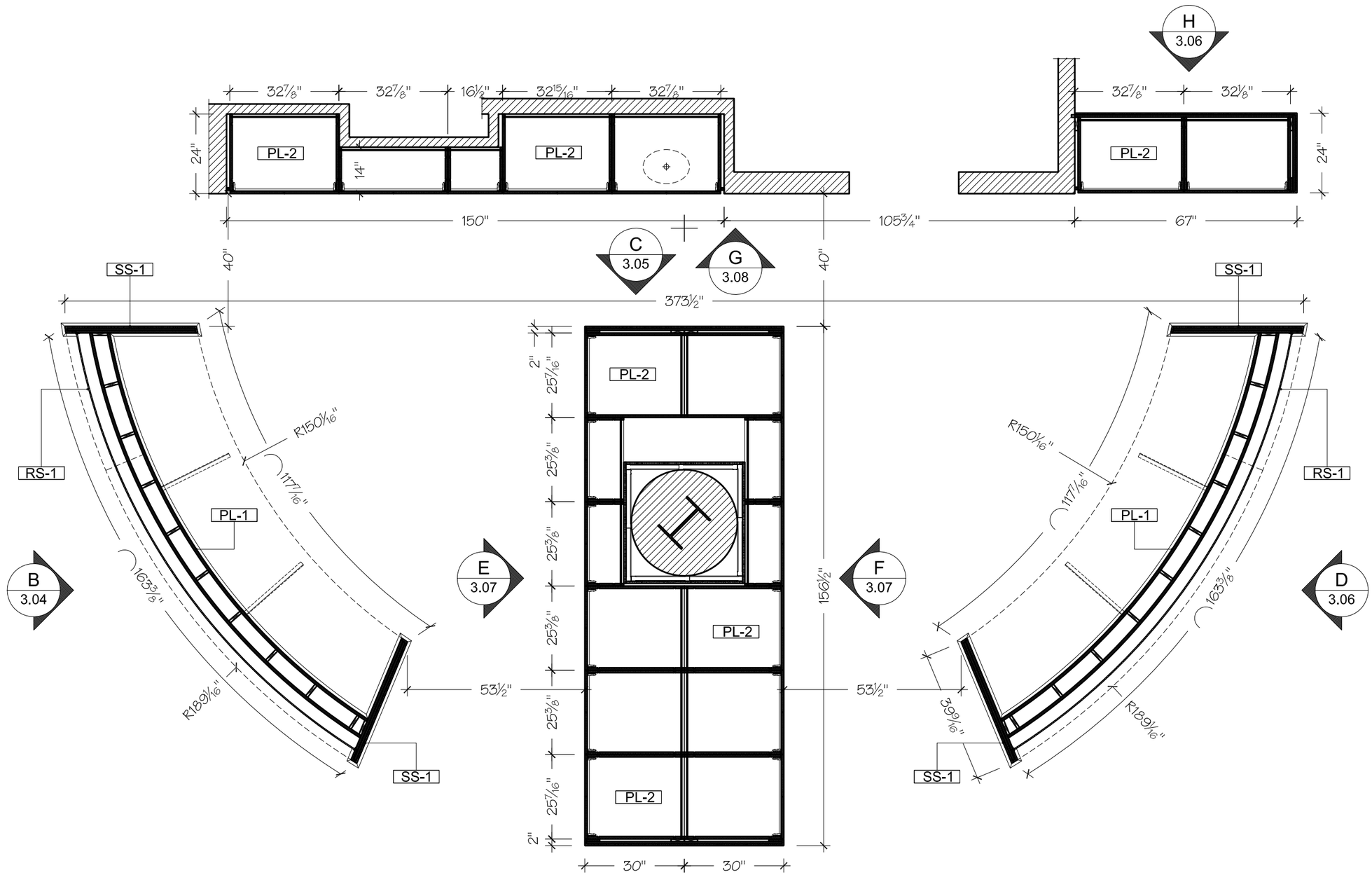

1 PLAN

SCALE: 3/8" = 1'- 0" NURSE STATION B2-126

ARCH:1/AS-4.05

MILL AND FIXTURE INC.

37523 SYCAMORE STREET
NEWARK, CALIFORNIA 94560
(510) 713-0430 FAX (510) 713-0436

JOB NAME: VA PALO ALTO DIALYSIS SUITE RENOVATION

JOB ADDRESS: VAMC PALO ALTO, VAPAHCS 3801 MIRANDA AVENUE PALO ALTO, CA 94304

CONTRACTOR: PATRIOT CONSTRUCTION

ARCHITECT: THE DESIGN PARTNERS LLP

NO.	REVISION	DATE

JOB NO: 13323

SCALE: AS NOTED

DATE: 12/04/2013

DRAWN BY: GZ

CHECKED BY: GA

SHEET 3.01

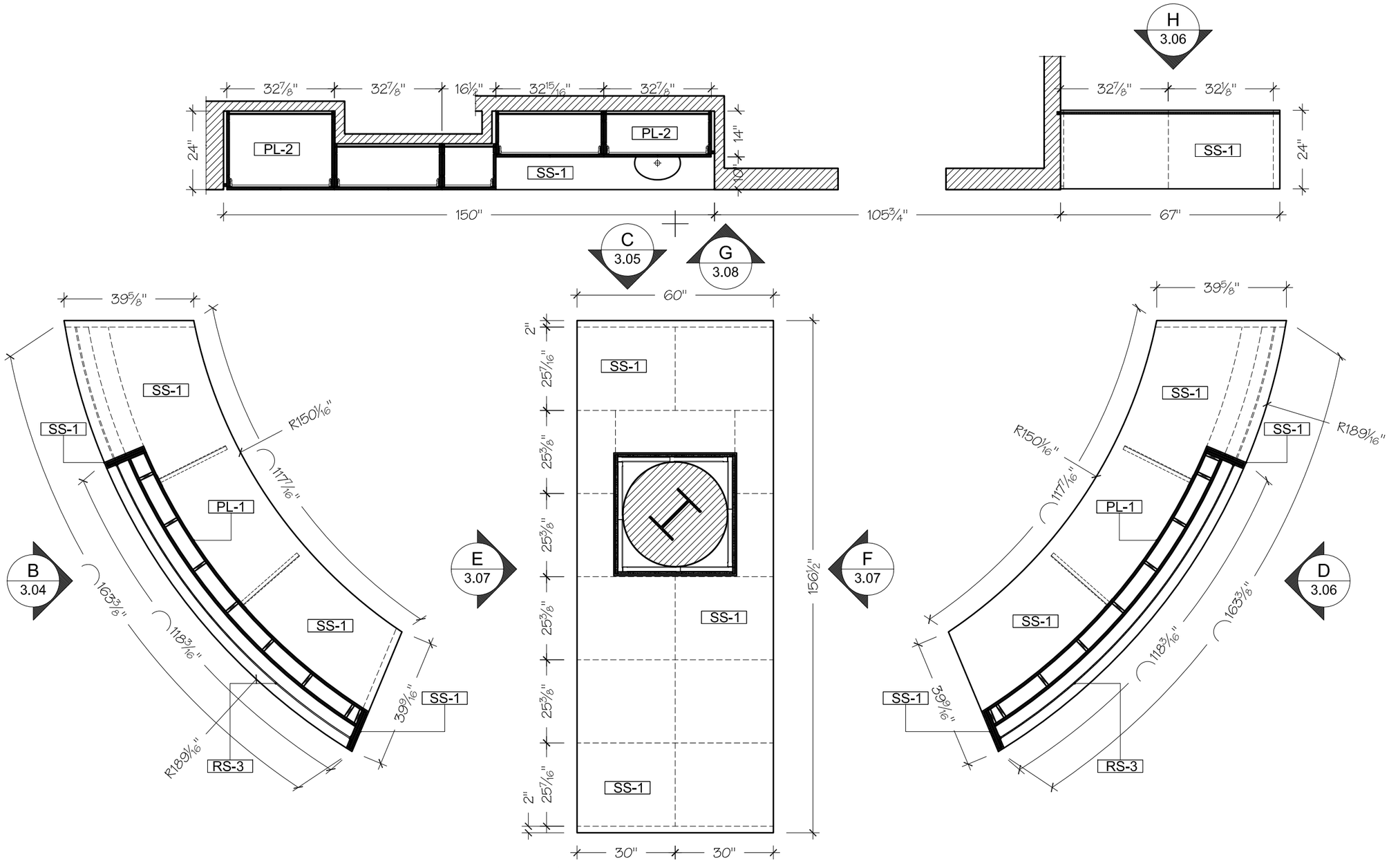

2 PLAN

SCALE: 3/8" = 1'- 0" NURSE STATION B2-126

ARCH:1/AS-4.05

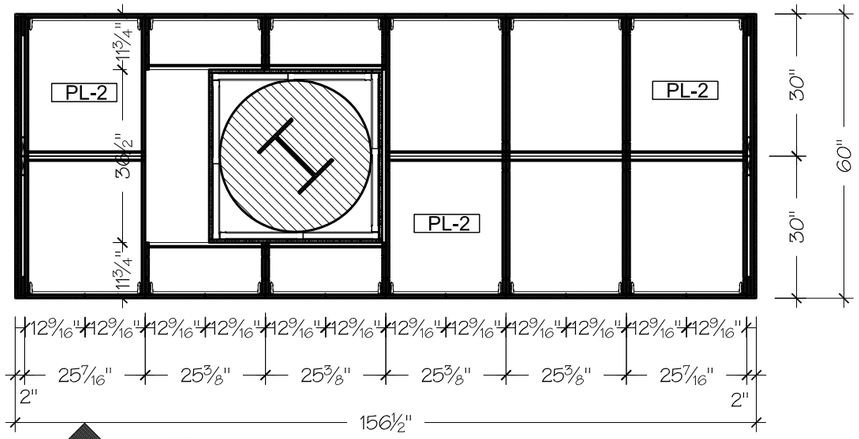

E 3.07

PLAN

SCALE: 3/8" = 1'- 0" NURSE STATION B2-126
ARCH:1/AS-4.05

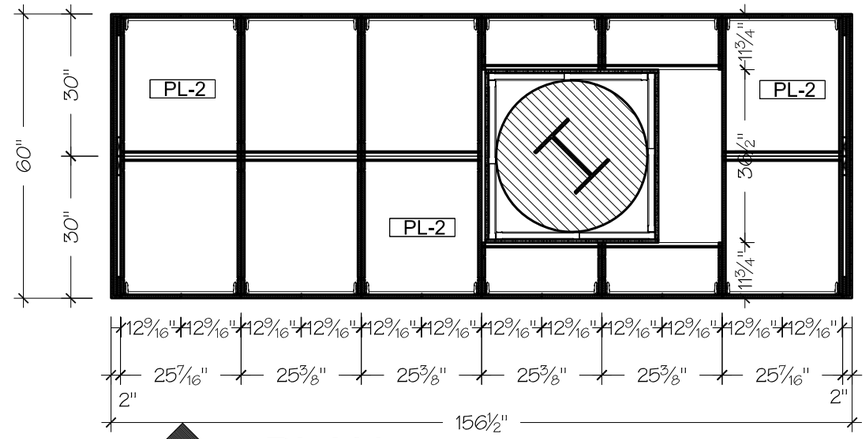

F 3.07

PLAN

SCALE: 3/8" = 1'- 0" NURSE STATION B2-126
ARCH:1/AS-4.05

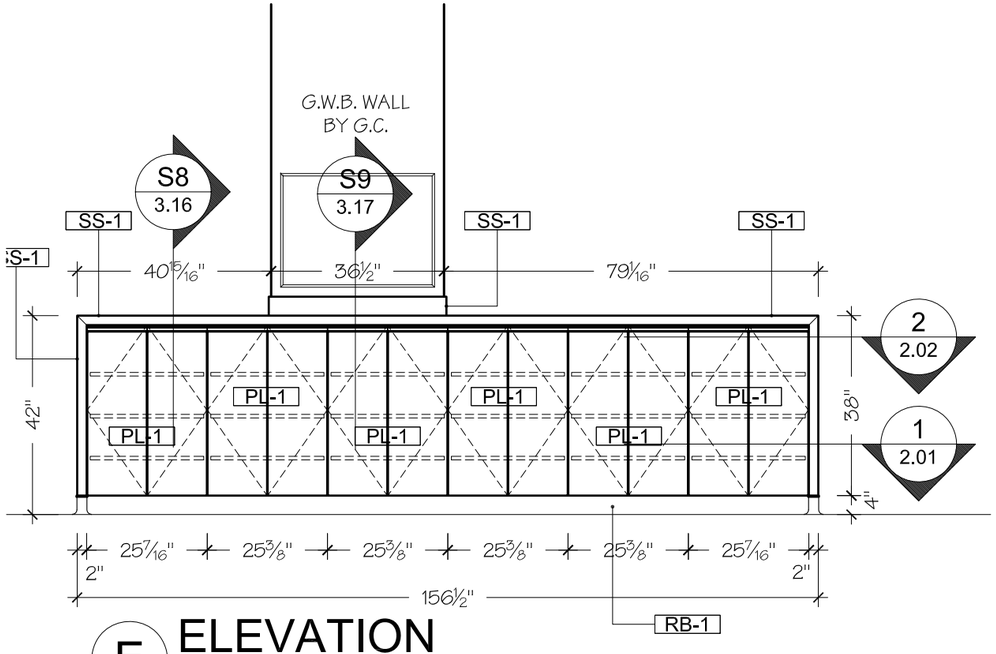

E

ELEVATION

SCALE: 3/8" = 1'- 0" NURSE STATION B2-126
ARCH:4/AS-4.05

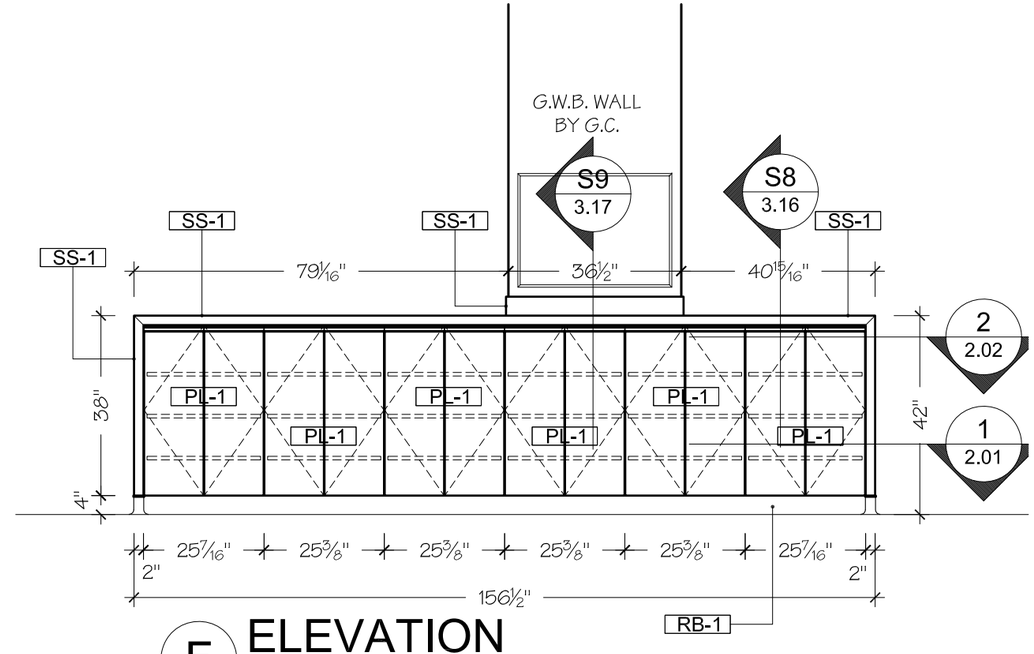

F

ELEVATION

SCALE: 3/8" = 1'- 0" NURSE STATION B2-126
ARCH:6/AS-4.05

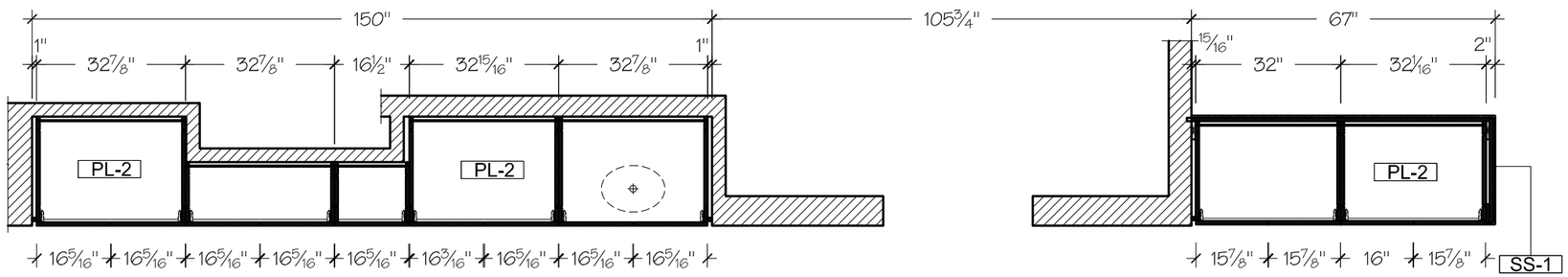

G 3.08

PLAN

SCALE: 3/8" = 1'- 0" NURSE STATION B2-126
ARCH:1/AS-4.04

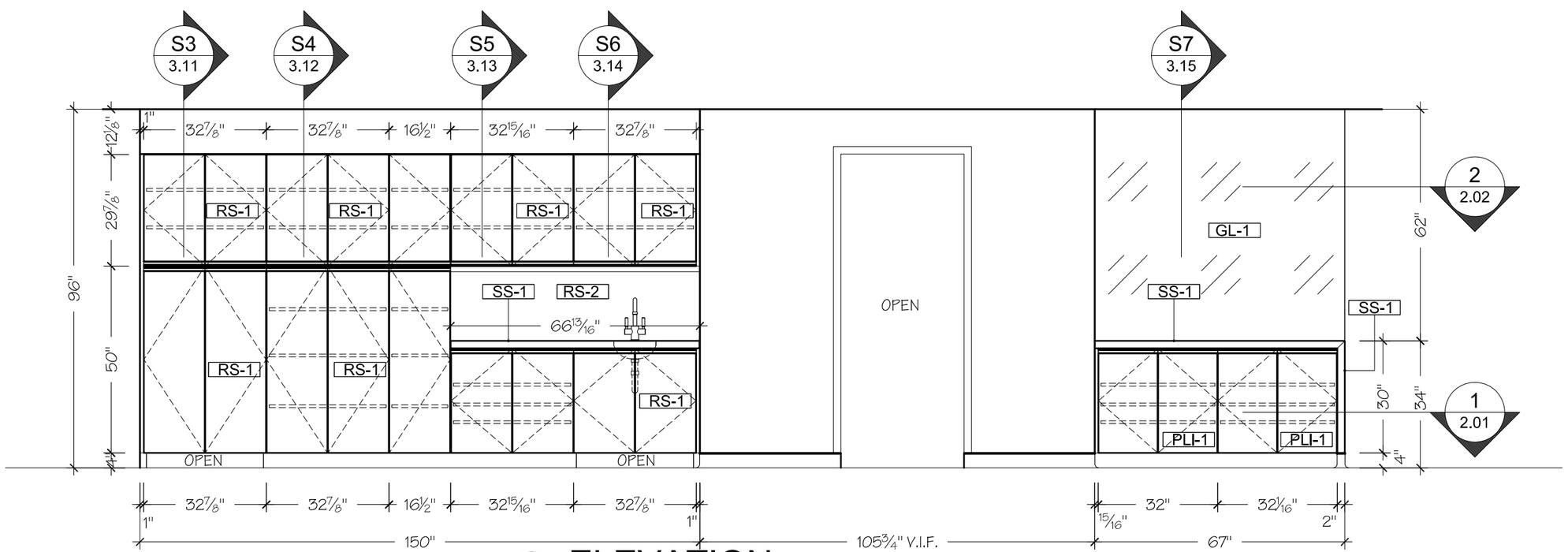

G

ELEVATION

SCALE: 3/8" = 1'- 0" NURSE STATION B2-126
ARCH:14/AS-4.04

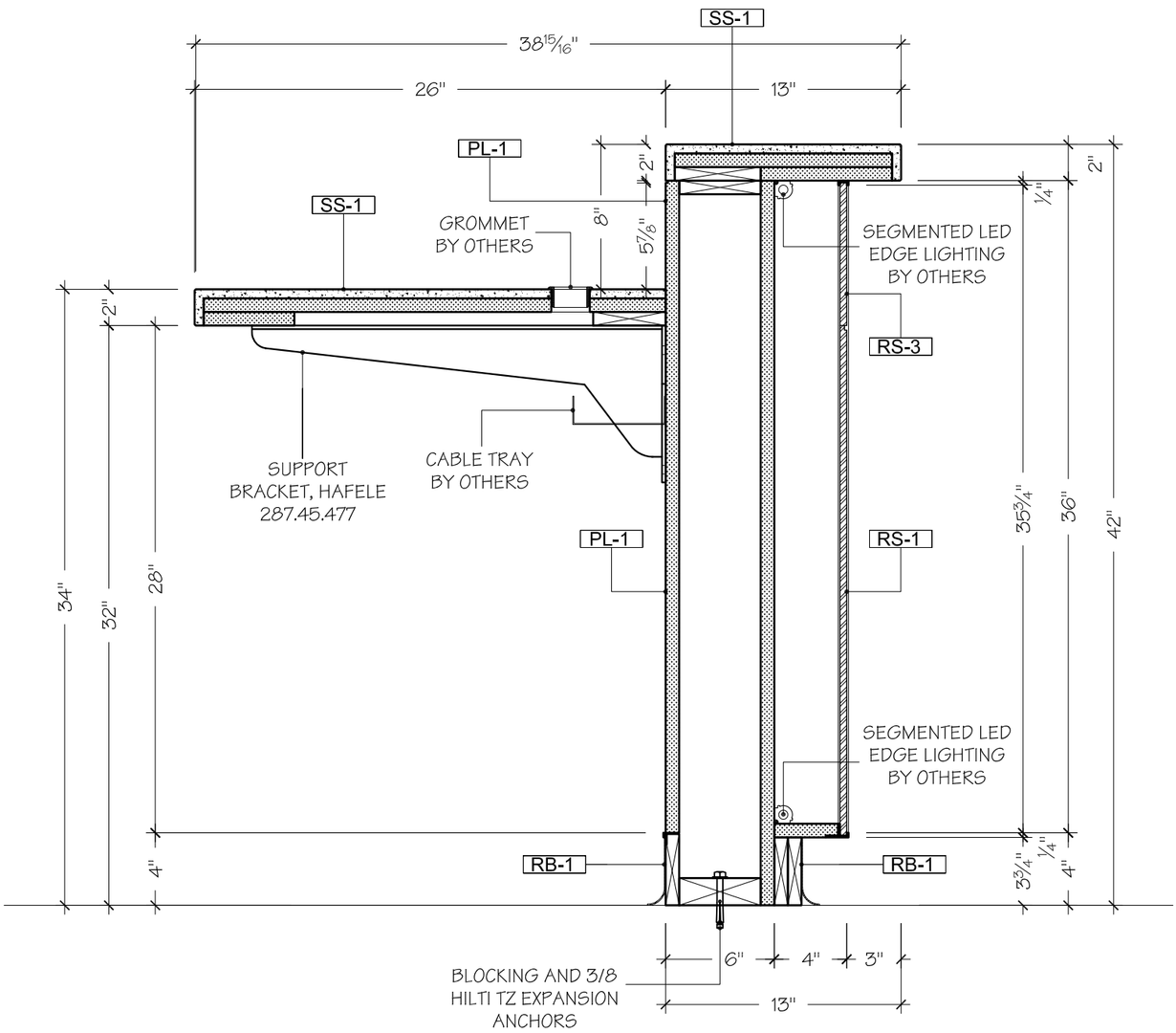

S1

TYPICAL
SECTION

SCALE: 1 1/2"=1'-0"

NURSE STATION B2-126
ARCH:2/AS-9.05

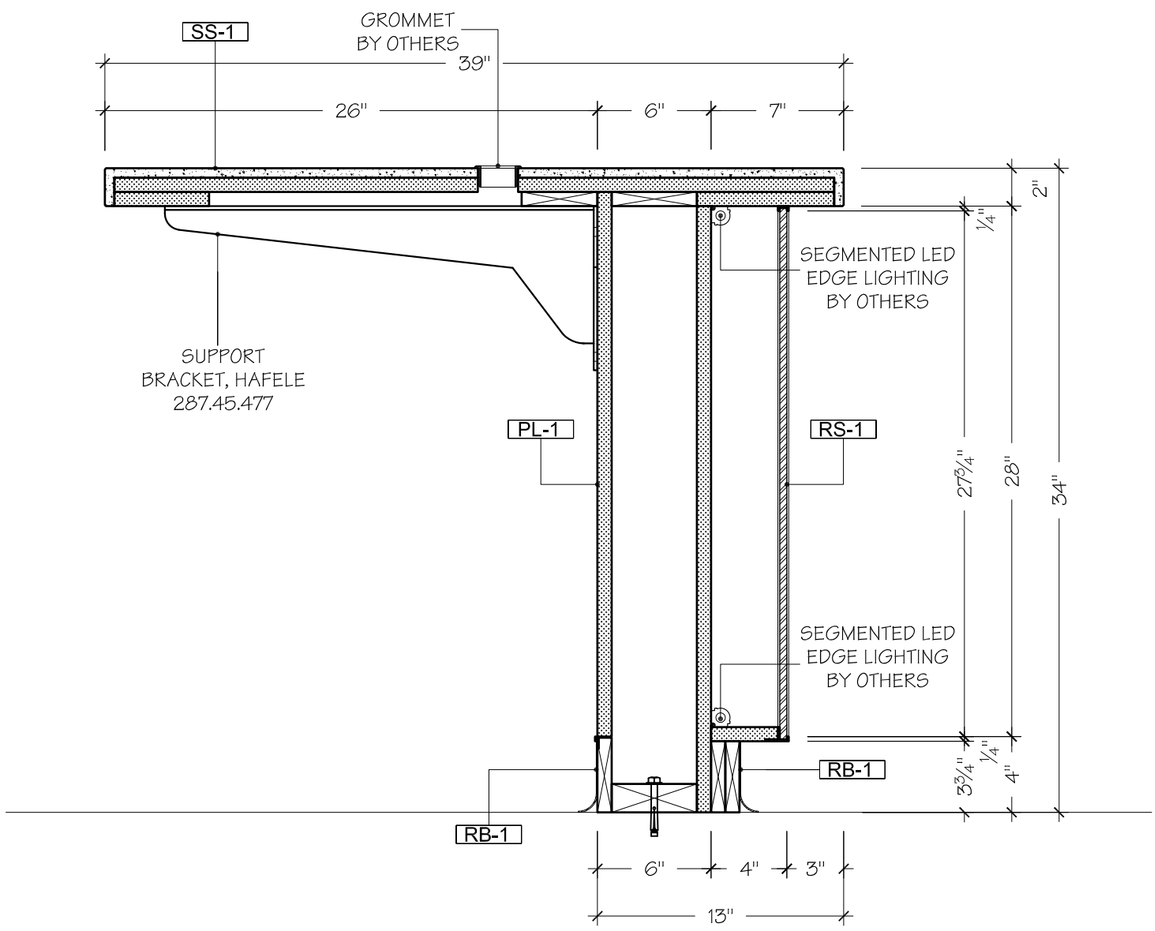

TYPICAL
SECTION
S2

SCALE: 1 1/2"=1'-0" NURSE STATION B2-126

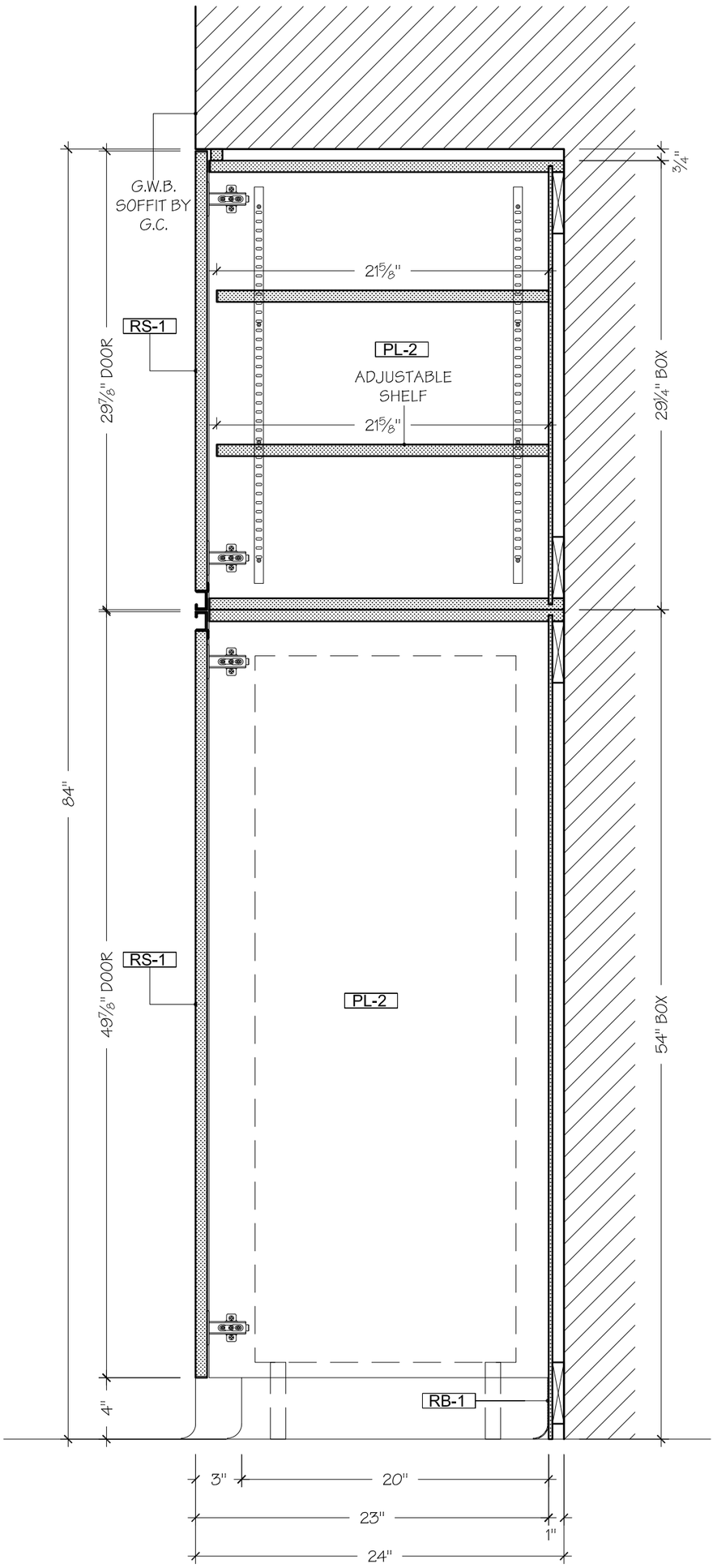

TYPICAL
SECTION

S3

SCALE: 1 1/2"=1'-0"

NURSE STATION B2-126
ARCH:5/AS-9.06

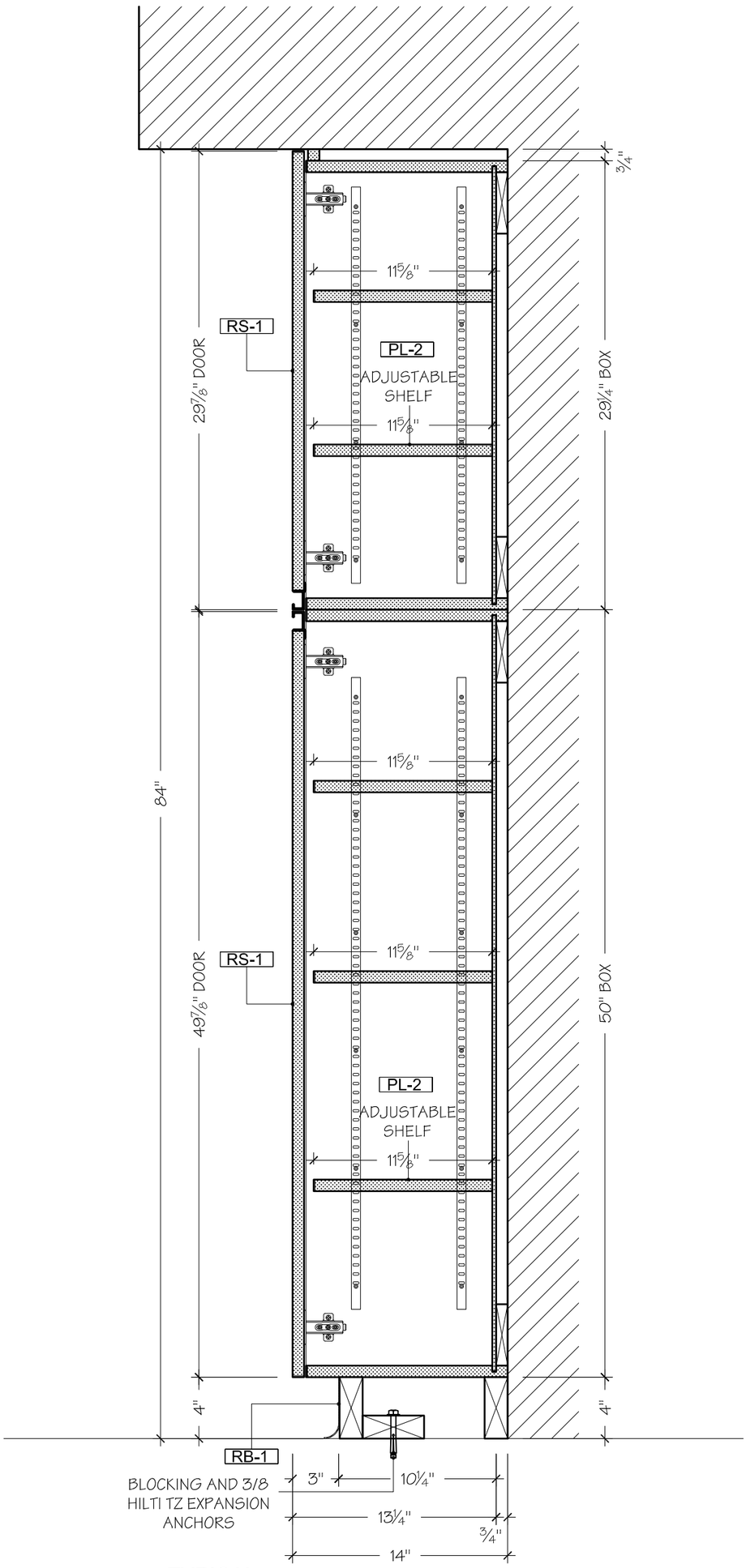

TYPICAL

SECTION

S4

SCALE: 1 1/2"=1'-0"

NURSE STATION B2-126

ARCH:3/AS-9.06

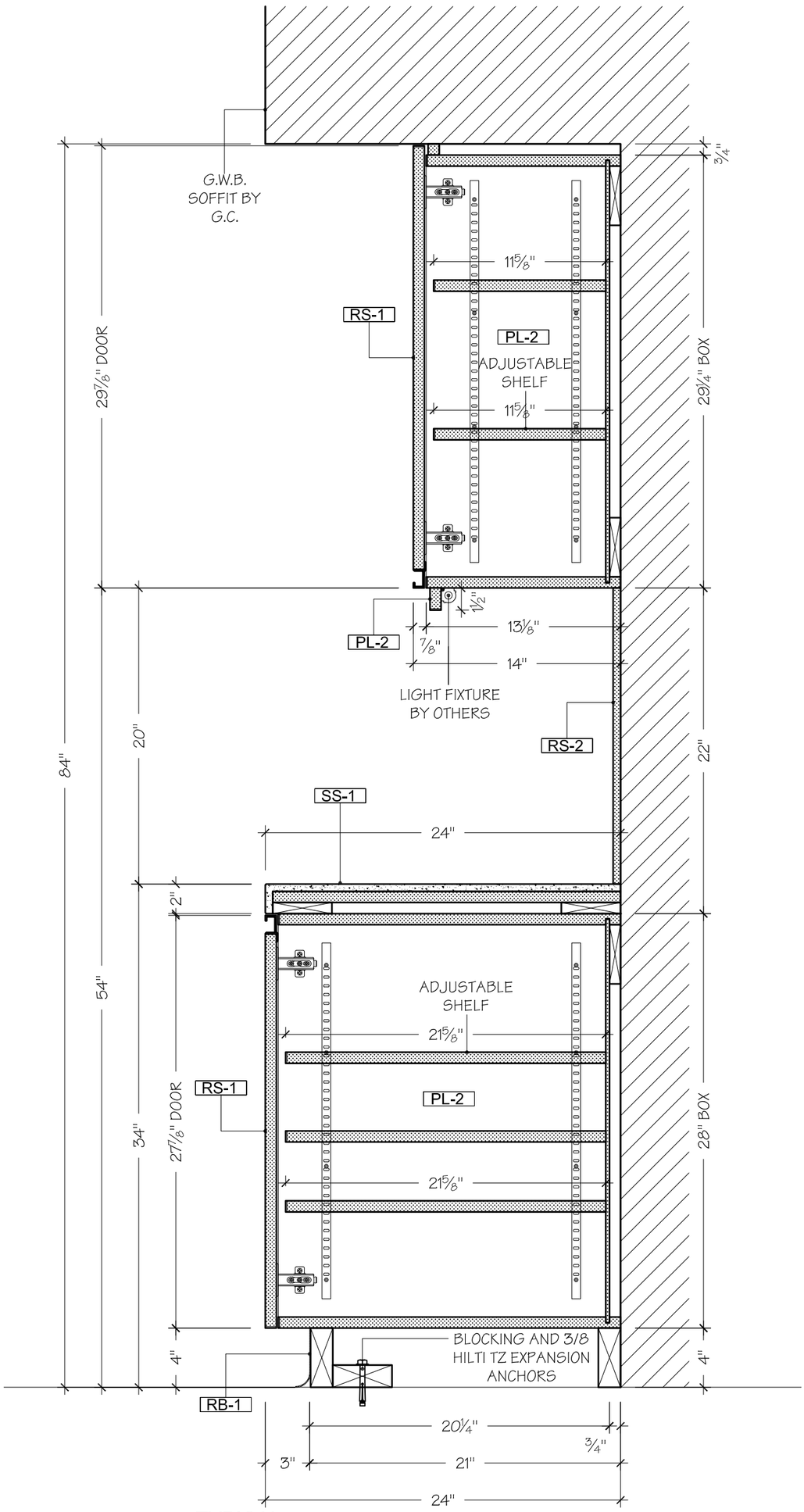

TYPICAL
SECTION
S5

SCALE: 1 1/2"=1'-0"

NURSE STATION B2-126
ARCH:1/AS-9.06

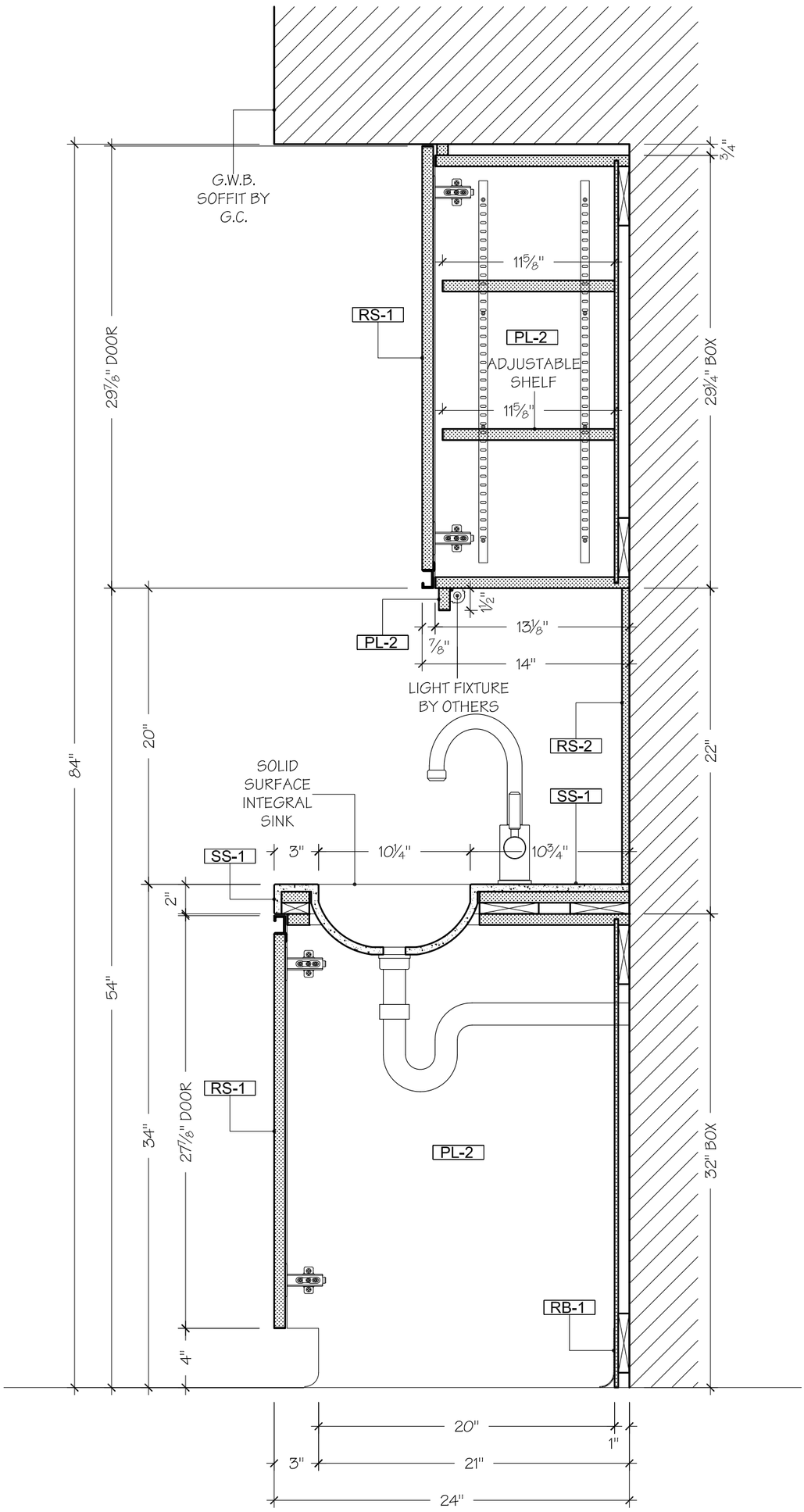

TYPICAL
SECTION

S6

SCALE: 1 1/2"=1'-0"

NURSE STATION B2-126
ARCH:13/AS-9.06

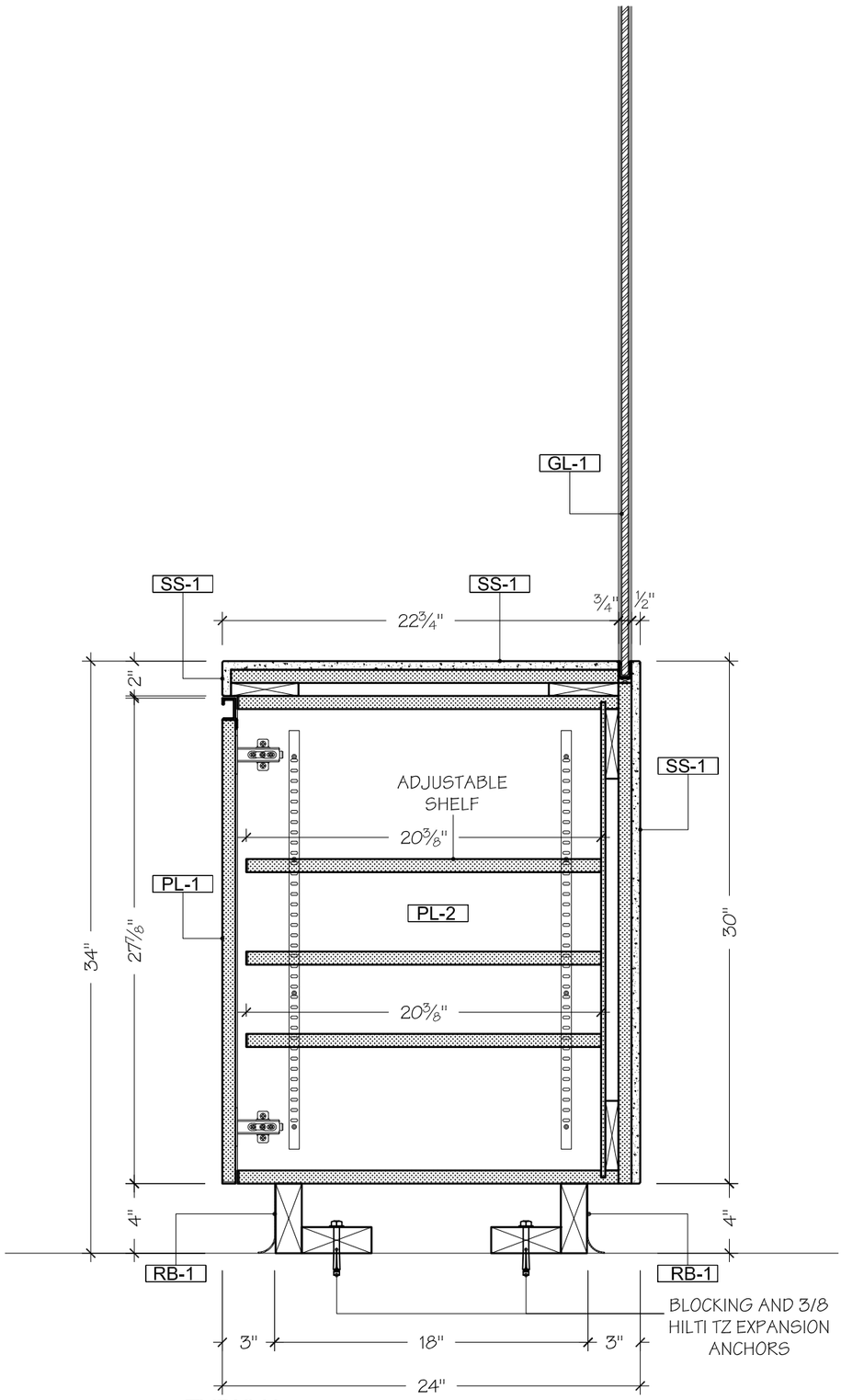

TYPICAL
SECTION

S7

SCALE: 1 1/2"=1'-0"

NURSE STATION B2-126
ARCH:9/AS-9.06

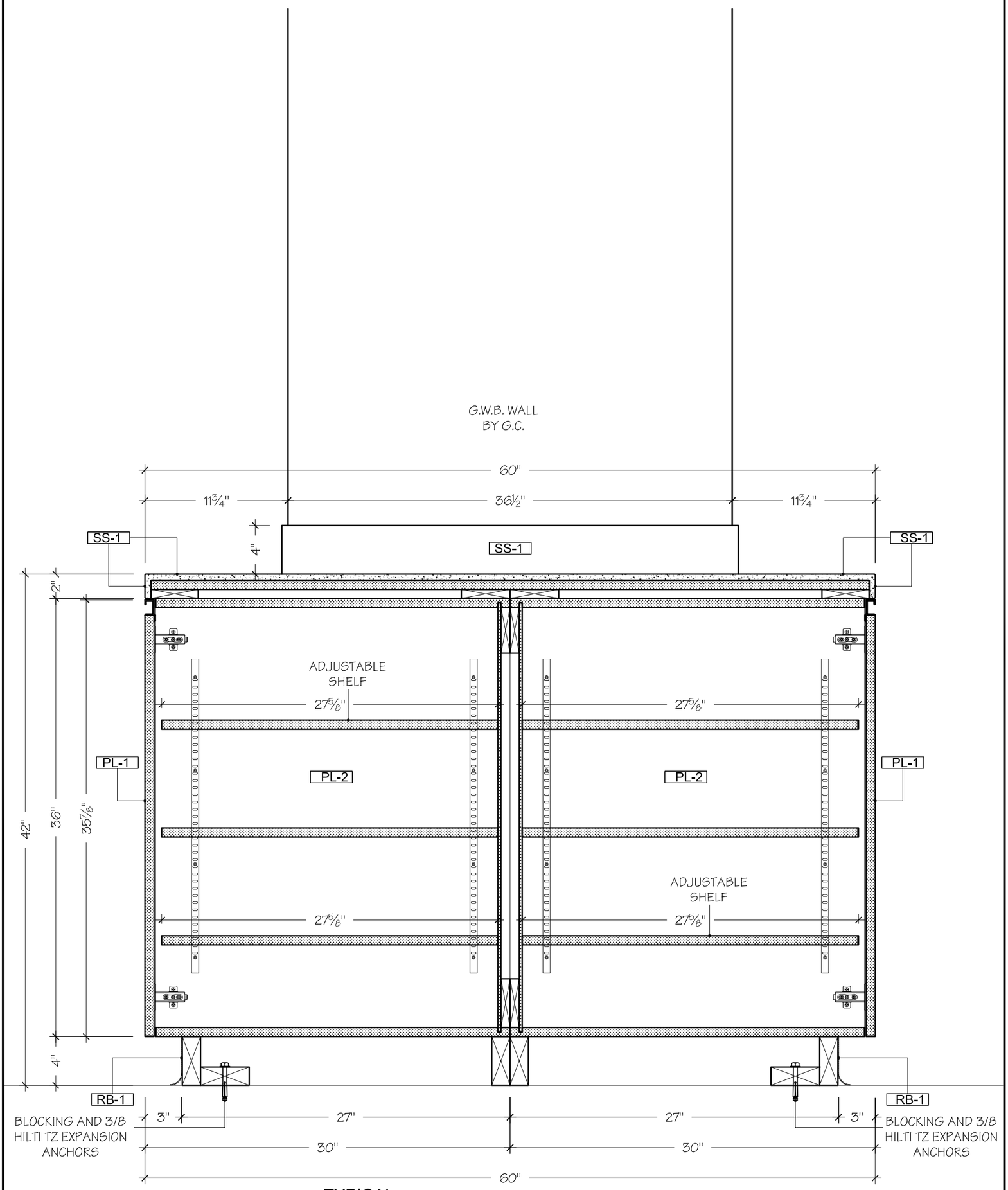

TYPICAL
SECTION

S8

SCALE: 1 1/2"=1'-0"

NURSE STATION B2-126
ARCH:6/AS-9.05

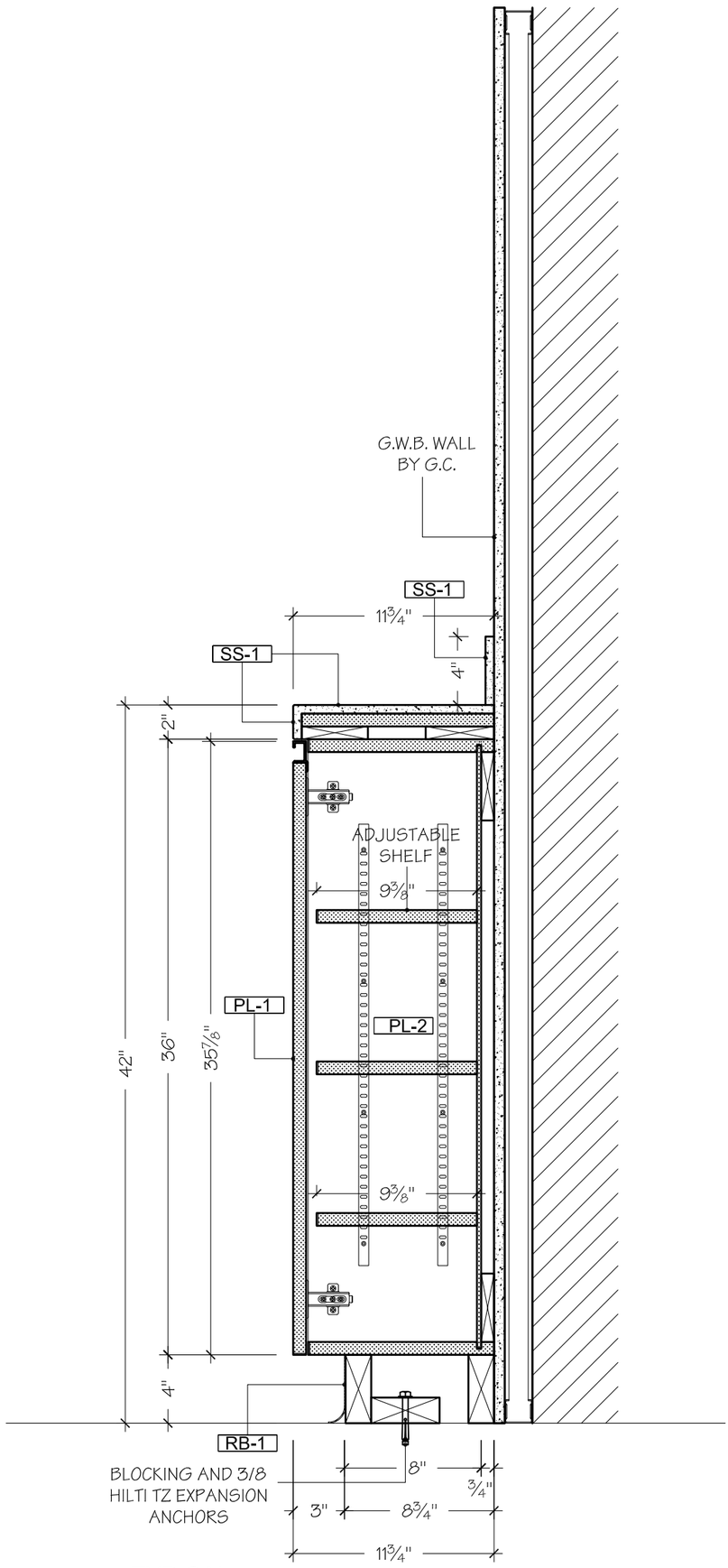

TYPICAL
SECTION

S9

SCALE: 1 1/2"=1'-0"

NURSE STATION B2-126
ARCH:10/AS-9.05

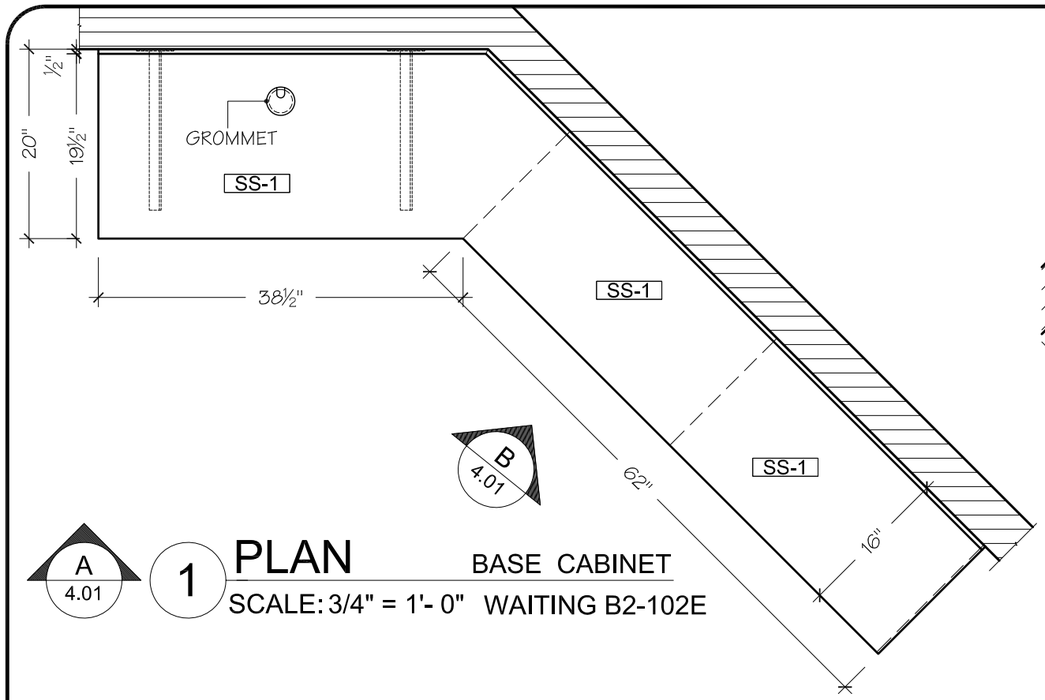

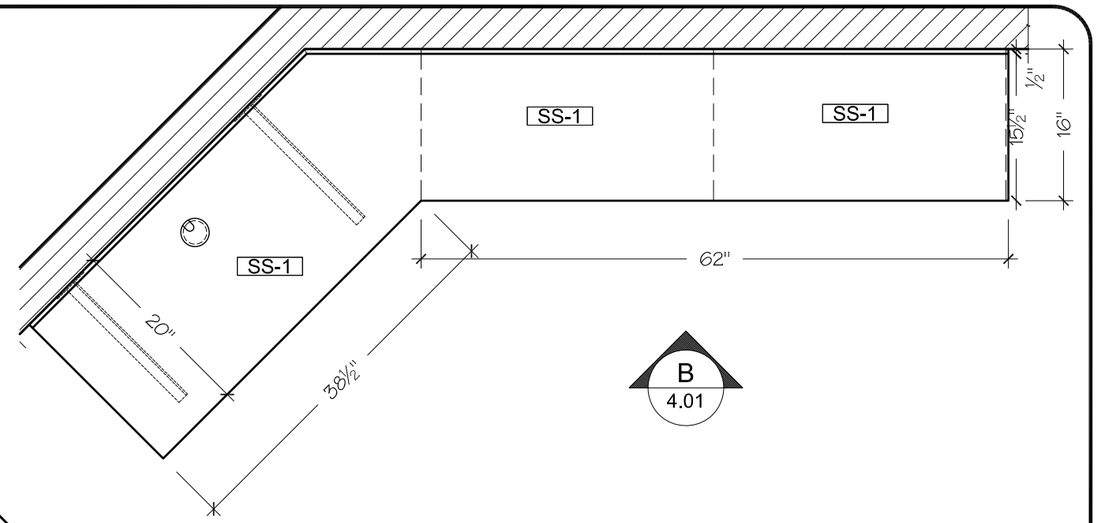

A 4.01 1 **PLAN** BASE CABINET

SCALE: 3/4" = 1'- 0" WAITING B2-102E

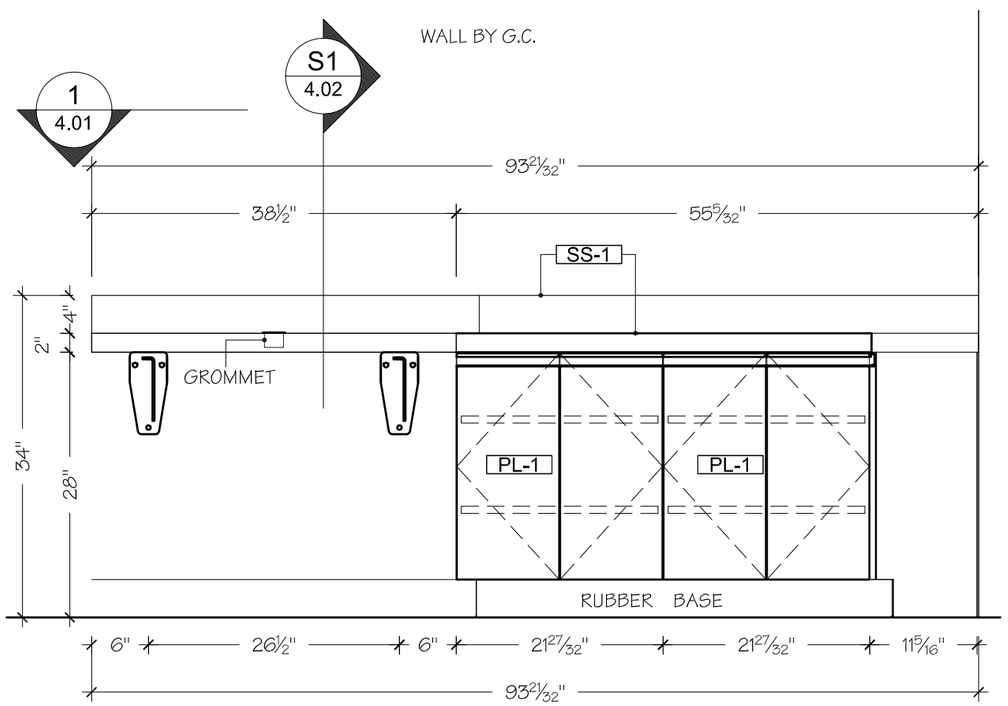

A **ELEVATION** BASE CABINET

SCALE: 3/4"= 1'- 0" WAITING B2-102E

ARCH: 9/AS4.02

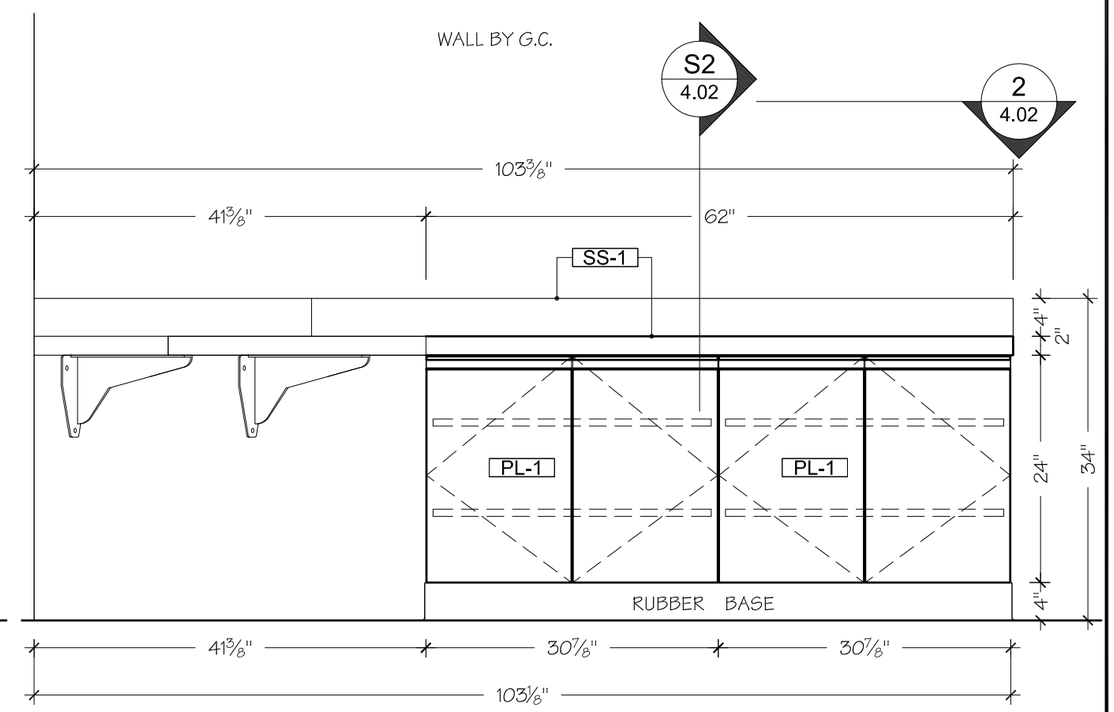

B **ELEVATION** BASE CABINET

SCALE: 3/4"= 1'- 0" WAITING B2-102E

ARCH: 9/AS4.02

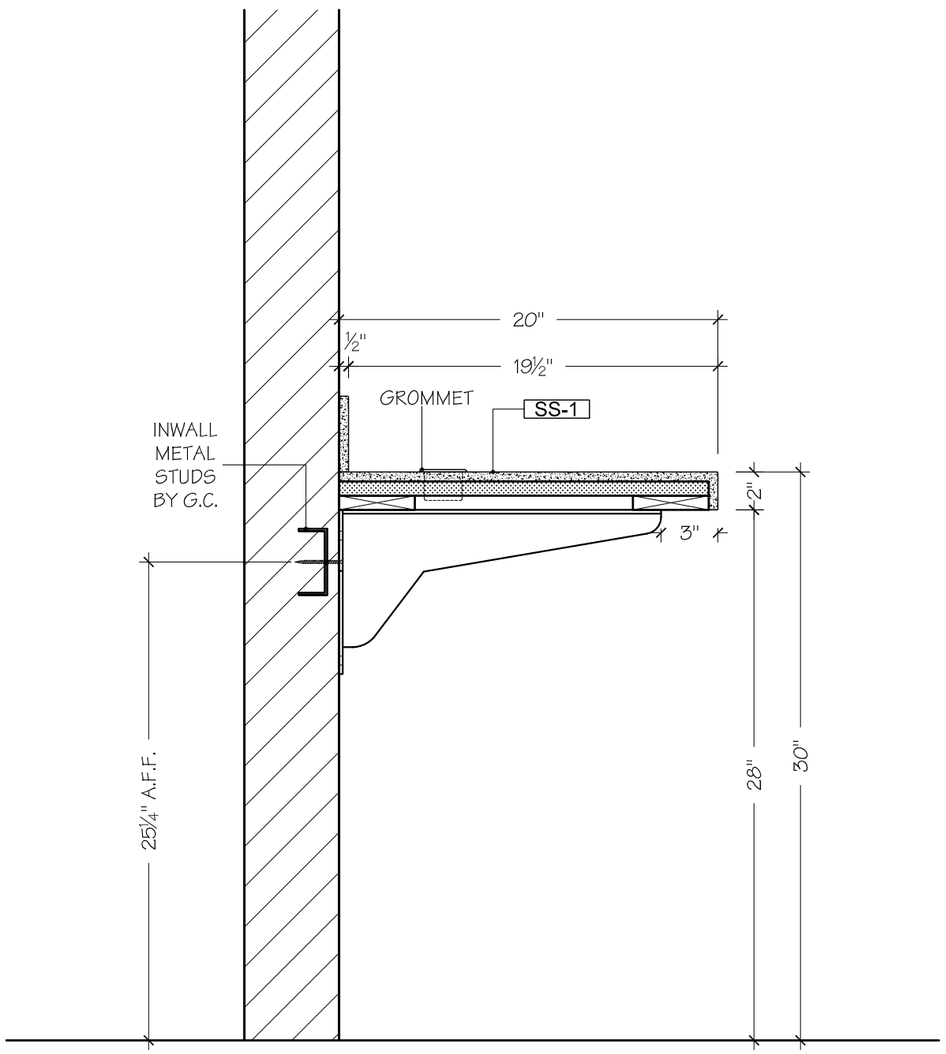

S1 SECTION BASE CABINET
SCALE: 1-1/2"= 1'-0" WAITING B2-102E

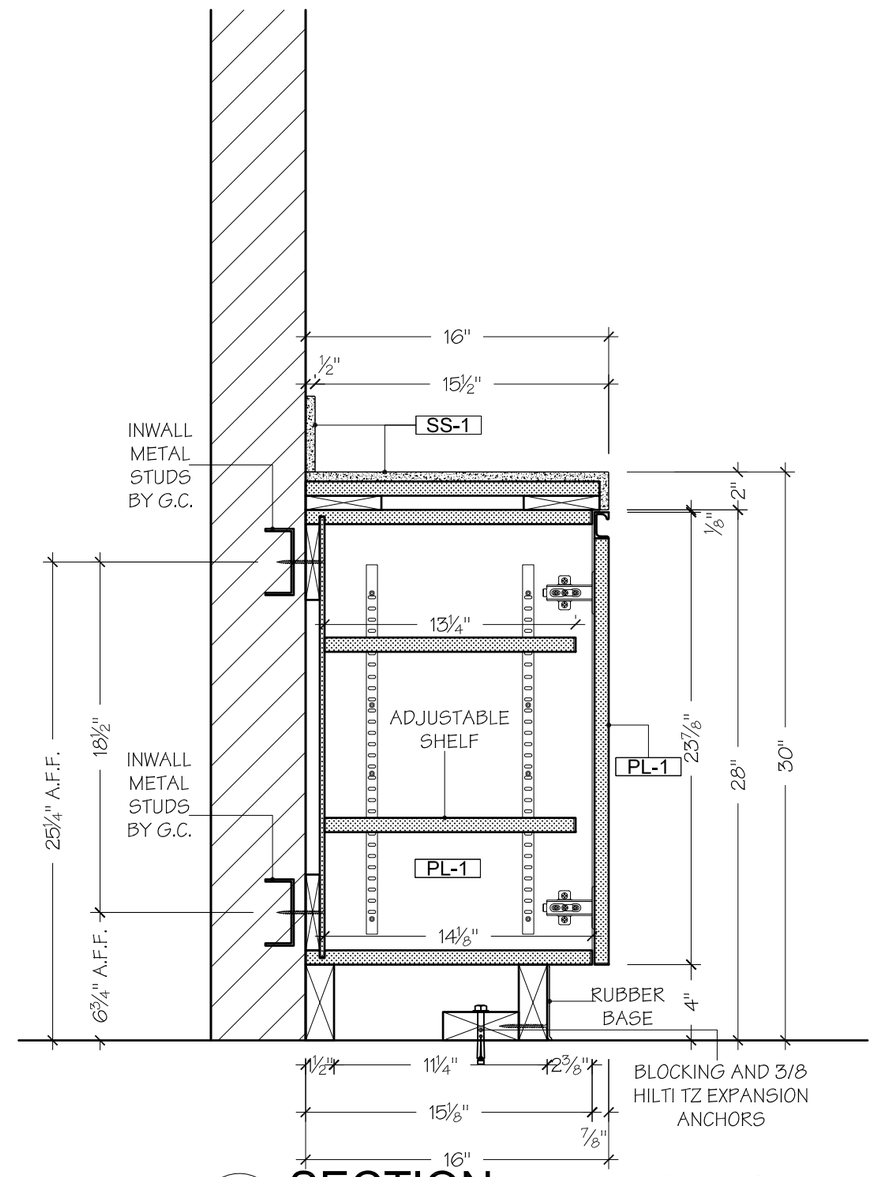

S2 SECTION BASE CABINET
SCALE: 1-1/2"= 1'-0" WAITING B2-102E

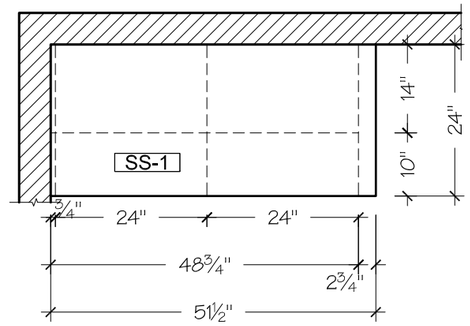

A 5.01 1 **PLAN** CASEWORK

SCALE: 1/2" = 1'- 0" COPY B2-122A

ARCH:1/AS4.04

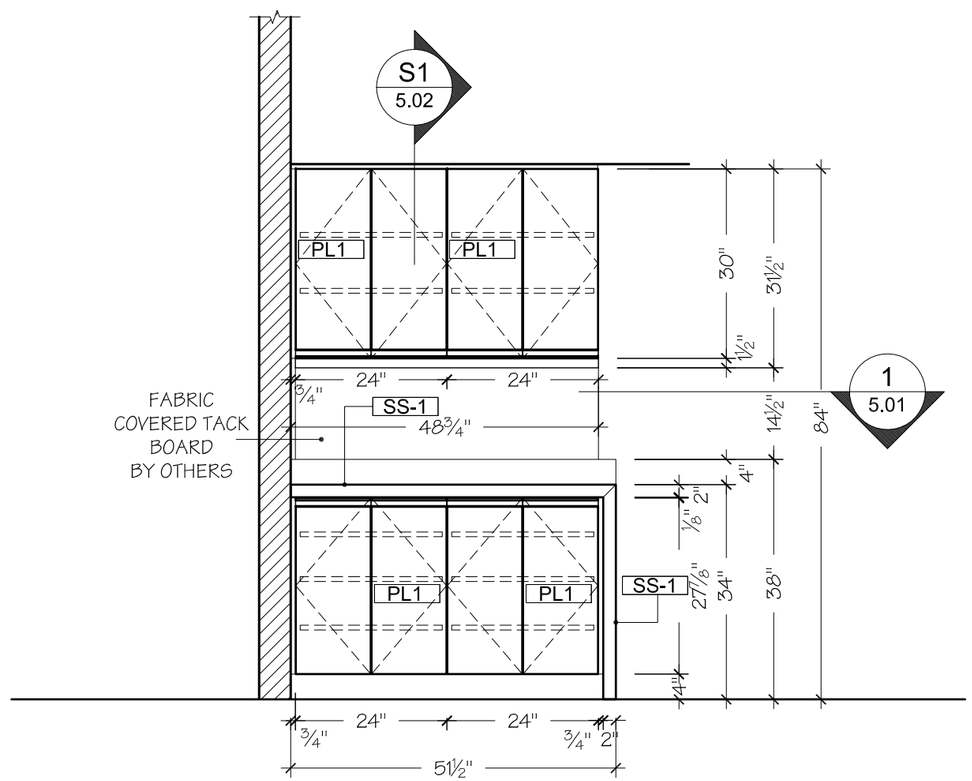

A **ELEVATION** CASEWORK

SCALE: 1/2"= 1'- 0" COPY B2-122A

ARCH: 11/AS4.04

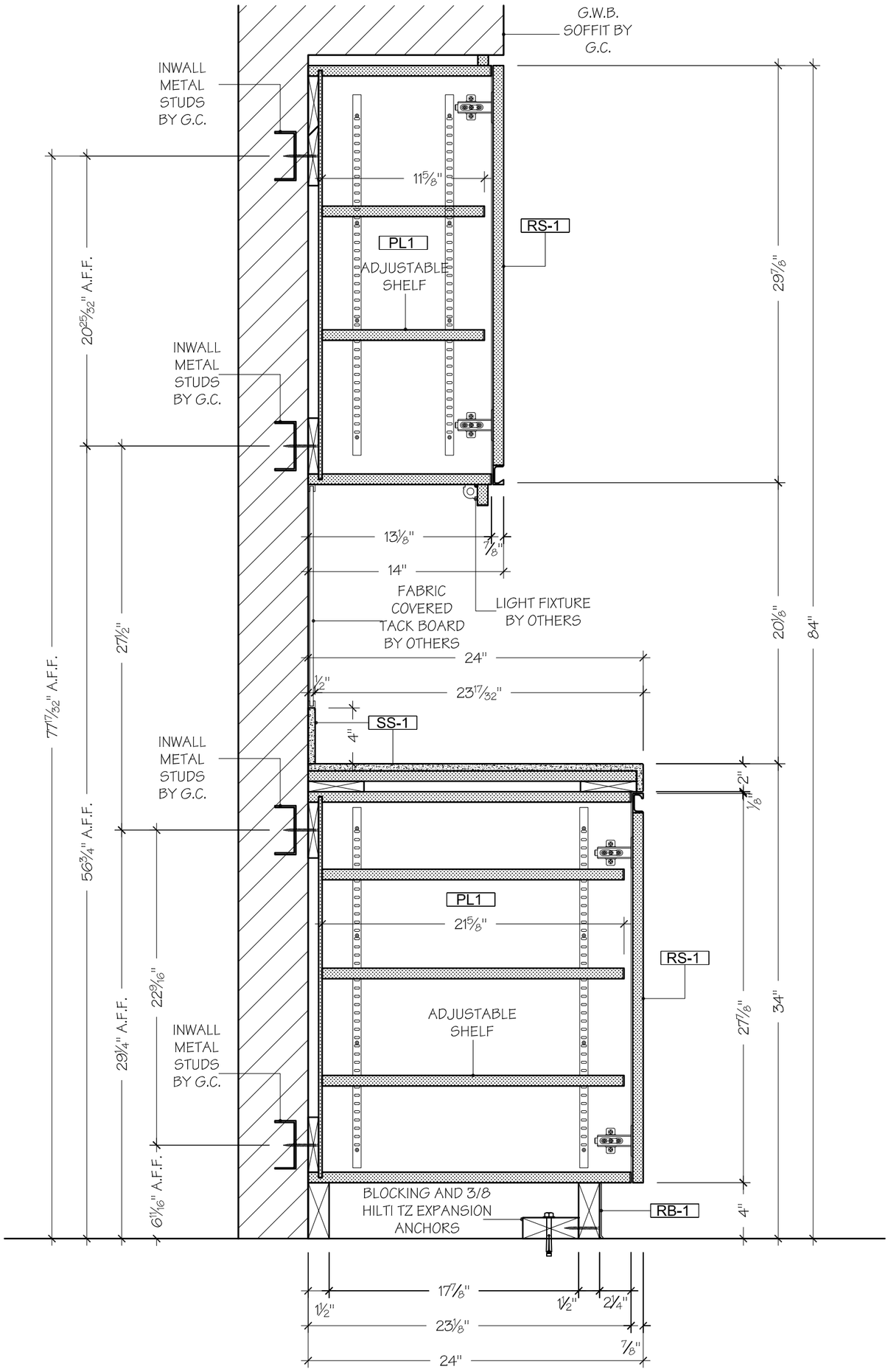

S1 SECTION

SCALE: 1-1/2"= 1'-0"

CASEWORK

COPY B2-122A

ARCH:3/AS9.05