CONSTRUCTION DOCUMENTS
BID SET
22 AUGUST 2014

INTENSIVE CARE UNIT

HARRY S TRUMAN MEMORIAL
VETERAN'S HOSPITAL
COLUMBIA, MISSOURI
VA PROJECT 589-330
VA CONTRACT N0: VA 255-P-1664

VOLUME 2 OF 3

SIGNATURE BLOCK:

DIRECTOR OF SPECIALTY CARE
INFECTION CONTROL PRACTITIONER
CHIEF ENGINEER
ASSISTANT DIRECTOR
ASSOCIATE DIRECTOR OF PATIENT SERVICES
CHIEF OF STAFF
ASSOCIATED DIRECTOR
MEDICAL CENTER DIRECTOR

VOLUME 1

GI001A	COVER SHEET - VOLUME 1	1A OF 296

GENERAL

GC100	PHASING PLAN	2 OF 296
GC100.1	PHASING PLAN - DEDUCT ALTERNATES 4,5	3 OF 296

ENVIRONMENTAL

HA100	ABATEMENT PLAN	4 OF 296
HA100.1	ABATEMENT PLAN - DEDUCT ALTERNATES 4,5	5 OF 296

LIFE SAFETY

LS102	INTERSTITIAL MECHANICAL LIFE SAFETY PLAN	6 OF 296
LS102.1	INTERSTITIAL MECHANICAL LIFE SAFETY PLAN - DEDUCT ALTERNATES 4,5	7 OF 296
LS103	THIRD FLOOR ICU LIFE SAFETY PLAN	8 OF 296
LS103.1	3RD FLOOR ICU LIFE SAFETY PLAN - DEDUCT ALTERNATE 1	9 OF 296
LS103.2	3RD FLOOR ICU LIFE SAFETY PLAN - DEDUCT ALTERNATE 2	10 OF 296
LS103.3	3RD FLOOR ICU LIFE SAFETY PLAN - DEDUCT ALTERNATE 3	11 OF 296
LS103.4	3RD FLOOR ICU LIFE SAFETY PLAN - DEDUCT ALTERNATE 4	12 OF 296

ARCHITECTURAL

AD100	DEMOLITION PLANS	13 OF 296
AD100.1	DEMOLITION PLANS - DEDUCT ALTERNATES 4,5	14 OF 296
AD101	DEMOLITION ELEVATIONS AND DETAILS	15 OF 296
AD102	DEMOLITION PLANS - BASEMENT AND FIRST FLOOR	16 OF 296
AE001	ABBREVIATIONS, LEGENDS & NOTES	17 OF 296
AE002	TYPICAL MOUNTING HEIGHTS	18 OF 296
AE102	INTERSTITIAL MECHANICAL LEVEL PLAN	19 OF 296
AE102.1	INTERSTITIAL MECHANICAL LEVEL PLAN - DEDUCT ALTERNATES 4,5	20 OF 296
AE103	THIRD FLOOR ICU PLAN	21 OF 296
AE103.1	THIRD FLOOR ICU PLAN - DEDUCT ALTERNATES 4,5	22 OF 296
AE104	ROOF PLAN	23 OF 296
AE104.1	ROOF PLAN - DEDUCT ALTERNATES 4,5	24 OF 296
AE200	BUILDING ELEVATIONS	25 OF 296
AE200.1	BUILDING ELEVATIONS - DEDUCT ALTERNATES 4,5	26 OF 296
AE201	BUILDING ELEVATIONS	27 OF 296
AE201.1	BUILDING ELEVATIONS - DEDUCT ALTERNATES 4,5	28 OF 296
AE202	BUILDING ELEVATIONS	29 OF 296
AE202.1	BUILDING ELEVATIONS - DEDUCT ALTERNATES 4,5	30 OF 296
AE210	BUILDING SECTIONS	31 OF 296
AE210.1	BUILDING SECTIONS - DEDUCT ALTERNATES 4,5	32 OF 296
AE300	WALL SECTIONS	33 OF 296
AE300.1	WALL SECTIONS - DEDUCT ALTERNATES 4,5	34 OF 296
AE301	WALL SECTIONS	35 OF 296
AE301.4	WALL SECTIONS - DEDUCT ALTERNATES 4,5	36 OF 296
AE302	WALL SECTIONS	37 OF 296
AE302.4	WALL SECTIONS - DEDUCT ALTERNATES 4,5	38 OF 296
AE303	WALL SECTIONS	39 OF 296
AE303.4	WALL SECTIONS - DEDUCT ALTERNATES 4,5	40 OF 296
AE304	EXTERIOR DETAILS	41 OF 296
AE304.4	EXTERIOR DETAILS - DEDUCT ALTERNATES 4,5	42 OF 296
AE310	PLAN DETAILS - SHELL	43 OF 296
AE310.1	PLAN DETAILS - SHELL	44 OF 296
AE311	PLAN DETAILS	45 OF 296
AE311.1	PLAN DETAILS	46 OF 296
AE320	ENLARGED DETAILS-SHELL	47 OF 296
AE321	ENLARGED DETAILS-SHELL	48 OF 296
AE322	INTERIOR DETAILS	49 OF 296
AE323	INTERIOR DETAILS	50 OF 296
AE403	THIRD FLOOR PLAN - AREA 1	51 OF 296
AE403.1	THIRD FLOOR PLAN - AREA 1 - DEDUCT ALTERNATE 1	52 OF 296
AE403.2	THIRD FLOOR PLAN - AREA 1 - DEDUCT ALTERNATE 2	53 OF 296
AE403.3	THIRD FLOOR PLAN - AREA 1 - DEDUCT ALTERNATE 3	54 OF 296
AE403.4	THIRD FLOOR PLAN - AREA 1 - DEDUCT ALTERNATE 4	55 OF 296
AE403.5	THIRD FLOOR PLAN - AREA 1 - DEDUCT ALTERNATE 5	56 OF 296
AE404	THIRD FLOOR PLAN - AREA 2	57 OF 296
AE404.5	THIRD FLOOR PLAN - AREA 2 - DEDUCT ALTERNATE 5	58 OF 296
AE405	THIRD FLOOR PLAN - AREA 3	59 OF 296
AE405.5	THIRD FLOOR PLAN - AREA 3 - DEDUCT ALTERNATE 5	60 OF 296
AE412	INTERSTITIAL MECHANICAL LEVEL AND PARTIAL FIRST FLOOR REFLECTED CEILING PLAN	61 OF 296
AE412.1	INTERSTITIAL MECHANICAL LEVEL AND PARTIAL FIRST FLOOR REFLECTED CEILING PLAN - DEDUCT ALTERNATES 4,5	62 OF 296
AE413	THIRD FLOOR REFLECTED CEILING PLAN - AREA 1	63 OF 296
AE413.1	THIRD FLOOR REFLECTED CEILING PLAN - AREA 1 - DEDUCT ALTERNATE 1	64 OF 296
AE413.2	THIRD FLOOR REFLECTED CEILING PLAN - AREA 1 - DEDUCT ALTERNATE 2	65 OF 296
AE413.3	THIRD FLOOR REFLECTED CEILING PLAN - AREA 1 - DEDUCT ALTERNATE 3	66 OF 296
AE413.4	THIRD FLOOR REFLECTED CEILING PLAN – AREA 1 – DEDUCT ALTERNATES 4,5	67 OF 296
AE414	THIRD FLOOR REFLECTED CEILING PLAN - AREA 2	68 OF 296
AE414.5	THIRD FLOOR REFLECTED CEILING PLAN - AREA 2 - DEDUCT ALTERNATE 5	69 OF 296
AE415	THIRD FLOOR REFLECTED CEILING PLAN - AREA 3	70 OF 296
AE415.5	THIRD FLOOR REFLECTED CEILING PLAN – AREA 3 – DEDUCT ALTERNATE 5	71 OF 296
AE416	ENLARGED REFLECTED CEILING PLANS	72 OF 296
AE416.5	ENLARGED REFLECTED CEILING PLANS – DEDUCT ALTERNATE 5	73 OF 296
AE417	BASEMENT AND FIRST FLOOR REFLECTED CEILING PLANS	74 OF 296
AE500	INTERIOR ELEVATIONS	75 OF 296
AE500.1	INTERIOR ELEVATIONS - DEDUCT ALTERNATE 5	76 OF 296
AE600	SPACE ACCOUNTING SUMMARY PLAN - 3RD FLOOR AND 6TH FLOOR	77 OF 296
AE600.1	SPACE ACCOUNTING SUMMARY PLAN - 3RD FLOOR AND 6TH FLOOR - DEDUCT ALTERNATES 4,5	78 OF 296
AE601	BUILDING GROSS AREA PLANS AND SCHEDULES	79 OF 296
AE601.1	BUILDING GROSS AREA PLANS AND SCHEDULES - DEDUCT ALTERNATES 4,5	80 OF 296
AE610	OPENING SCHEDULES AND DETAILS	81 OF 296
AE610.4	OPENING SCHEDULES AND DETAILS - DEDUCT ALTERNATE 4	82 OF 296
AE610.5	OPENING SCHEDULES AND DETAILS - DEDUCT ALTERNATE 5	83 OF 296
AE611	OPENING DETAILS	84 OF 296
AE611.1	OPENING DETAILS – BASE BID, DEDUCT ALTERNATES 1,2,3,4	85 OF 296
AE701	PARTITION TYPE SECTIONS, PARTITION SCHEDULE AND PARTITION DETAILS	86 OF 296
AE703	PARTITION DETAILS	87 OF 296
AE720	TYPICAL CASEWORK ELEVATIONS	88 OF 296
AE900	CEILING DETAILS	89 OF 296
AI001	COLOR & MATERIAL LEGEND/ROOM FINISH SCHEDULES	90 OF 296
AI100	FLOOR FINISH PLAN, ROOM FINISH SCHEDULES	91 OF 296
AI100.1	FLOOR FINISH PLAN, ROOM FINISH SCHEDULES - DEDUCT ALTERNATES 4,5	92 OF 296
AQ403	THRID FLOOR EQUIPMENT PLAN - AREA 1	93 OF 296
AQ403.1	THRID FLOOR EQUIPMENT PLAN - AREA 1 - DEDUCT ALTERNATE 1	94 OF 296
AQ403.2	THRID FLOOR EQUIPMENT PLAN - AREA 1 - DEDUCT ALTERNATE 2	95 OF 296
AQ403.3	THRID FLOOR EQUIPMENT PLAN - AREA 1 - DEDUCT ALTERNATE 3	96 OF 296
AQ403.4	THIRD FLOOR EQUIPMENT PLAN - AREA 1 - DEDUCT ALTERNATE 4	97 OF 296
AQ403.5	THIRD FLOOR EQUIPMENT PLAN - AREA 1 - DEDUCT ALTERNATE 5	98 OF 296
AQ404	THIRD FLOOR EQUIPMENT PLAN - AREA 2	99 OF 296
AQ404.5	THIRD FLOOR EQUIPMENT PLAN – AREA 2 – DEDUCT ALTERNATE 5	100 OF 296
AQ405	THIRD FLOOR EQUIPMENT PLAN - AREA 3	101 OF 296
AQ405.5	THIRD FLOOR EQUIPMENT PLAN – AREA 3 – DEDUCT ALTERNATE 5	102 OF 296
AQ406	EQUIPMENT LIST	103 OF 296

VOLUME 2

GI001B	COVER SHEET - VOLUME 2	1B OF 296

STRUCTURAL

SS003.4	TYPICAL DETAILS - DEDUCT ALTERNATES 4,5	104 OF 296
SS101.4	INTERSTITIAL FLOOR PLAN - DEDUCT ALTERNATES 4,5	105 OF 296
SS102.4	THIRD FLOOR FRAMING PLAN - DEDUCT ALTERNATES 4,5	106 OF 296
SS103.4	ROOF FRAMING PLAN - DEDUCT ALTERNATES 4,5	107 OF 296
SS303.4	SECTIONS - DEDUCT ALTERNATES 4,5	108 OF 296
SS305.4	SECTIONS - DEDUCT ALTERNATES 4,5	109 OF 296
SS307.4	SECTIONS - DEDUCT ALTERNATES 4,5	110 OF 296
SS308.4	SECTIONS - DEDUCT ALTERNATES 4,5	111 OF 296
SS309.4	SECTIONS - DEDUCT ALTERNATES 4,5	112 OF 296
SS401.4	COLUMN SCHEDULES - DEDUCT ALTERNATES 4,5	113 OF 296

PLUMBING

P001	PLUMBING & MEDICAL GAS - LEGEND & NOTES	114 OF 296
PL101	EXISTING BASEMENT & FIRST FLOOR PLANS, PLUMBING	115 OF 296
PL101.3	EXISTING BASEMENT & FIRST FLOOR PLANS, PLUMBING	116 OF 296
PL102	INTERSTITIAL SPACE - SANITARY & STORM	117 OF 296
PL102.4	INTERSTITIAL SPACE - SANITARY & STORM - DEDUCT ALTERNATE 4	118 OF 296
PL103	ICU FLOOR PLAN - SANITARY & STORM	119 OF 296
PL103.2	ICU FLOOR PLAN - SANITARY & STORM - DEDUCT ALTERNATE 2	120 OF 296
PL103.3	ICU FLOOR PLAN - SANITARY & STORM - DEDUCT ALTERNATE 3	121 OF 296
PL103.4	ICU FLOOR PLAN - SANITARY & STORM - DEDUCT ALTERNATE 4	122 OF 296
PL103.5	ICU FLOOR PLAN - SANITARY & STORM - DEDUCT ALTERNATE 5	123 OF 296
PL104	ICU ROOF PLAN - SANITARY & STORM	124 OF 296
PL104.2	ICU ROOF PLAN - SANITARY & STORM - DEDUCT ALTERNATE 2	125 OF 296
PL104.3	ICU ROOF PLAN - SANITARY & STORM - DEDUCT ALTERNATE 3	126 OF 296
PL104.4	ICU ROOF PLAN - SANITARY & STORM - DEDUCT ALTERNATE 4	127 OF 296
PL203	ICU FLOOR PLAN - DOMESTIC WATER	128 OF 296
PL203.2	ICU FLOOR PLAN - DOMESTIC WATER - DEDUCT ALTERNATE 2	129 OF 296
PL203.3	ICU FLOOR PLAN - DOMESTIC WATER - DEDUCT ALTERNATE 3	130 OF 296
PL203.4	ICU FLOOR PLAN - DOMESTIC WATER - DEDUCT ALTERNATE 4	131 OF 296
PL203.5	ICU FLOOR PLAN - DOMESTIC WATER - DEDUCT ALTERNATE 5	132 OF 296
PL301	EXISTING SUB-BASEMENT, BASEMENT & 1ST FLOOR PLANS, MEDICAL GAS	133 OF 296
PL302	INTERSTITIAL SPACE - MEDICAL GAS	134 OF 296
PL303	ICU FLOOR PLAN - MEDICAL GAS	135 OF 296
PL303.4	ICU FLOOR PLAN - MEDICAL GAS - DEDUCT ALTERNATE 4	136 OF 296
PL303.5	ICU FLOOR PLAN - MEDICAL GAS - DEDUCT ALTERNATE 5	137 OF 296
PL401	SCHEDULES - PLUMBING	138 OF 296
PL401.3	SCHEDULES - PLUMBING - DEDUCT ALTERNATE 3	139 OF 296
PL401.5	SCHEDULES - PLUMBING - DEDUCT ALTERNATE 5	140 OF 296
PL501	SANITARY & VENT RISER DIAGRAMS	141 OF 296
PL501.2	SANITARY & VENT RISER DIAGRAMS - DEDUCT ALTERNATE 2	142 OF 296
PL501.3	SANITARY & VENT RISER DIAGRAMS - DEDUCT ALTERNATE 3	143 OF 296
PL501.5	SANITARY & VENT RISER DIAGRAMS - DEDUCT ALTERNATE 5	144 OF 296
PL502	DOMESTIC WATER, RISER DIAGRAM	145 OF 296
PL502.2	DOMESTIC WATER, RISER DIAGRAM - DEDUCT ALTERNATE 2	146 OF 296
PL502.3	DOMESTIC WATER, RISER DIAGRAM - DEDUCT ALTERNATE 3	147 OF 296
PL502.5	DOMESTIC WATER, RISER DIAGRAM - DEDUCT ALTERNATE 5	148 OF 296
PL503	MEDICAL GAS, RISER DIAGRAM	149 OF 296
PL601	DETAILS - PLUMBING	150 OF 296
PL601.3	DETAILS - PLUMBING - DEDUCT ALTERNATE 3	151 OF 296
PL602	DETAILS - MEDICAL GAS	152 OF 296

FIRE PROTECTION

FA001	FIRE ALARM NOTES	153 OF 296
FA102	INTERSTITIAL MECHANICAL LEVEL FIRE ALARM PLAN	154 OF 296
FA102.1	INTERSTITIAL MECHANICAL LEVEL FIRE ALARM PLAN - DEDUCT ALTERNATES 4,5	155 OF 296
FA103	THIRD FLOOR ICU FIRE ALARM PLAN - AREA 1	156 OF 296
FA103.1	THIRD FLOOR ICU FIRE ALARM PLAN - AREA 1 - DEDUCT ALTERNATE 1	157 OF 296
FA103.2	THIRD FLOOR ICU FIRE ALARM PLAN - AREA 1 - DEDUCT ALTERNATE 2	158 OF 296
FA103.3	THIRD FLOOR ICU FIRE ALARM PLAN - AREA 1 - DEDUCT ALTERNATE 3	159 OF 296
FA103.4	THIRD FLOOR ICU FIRE ALARM PLAN - AREA 1 - DEDUCT ALTERNATE 4	160 OF 296
FA104	THIRD FLOOR ICU FIRE ALARM PLAN - AREA 2	161 OF 296
FA105	THIRD FLOOR ICU FIRE ALARM PLAN - AREA 3	162 OF 296
FA201	FIRE ALARM DETAILS	163 OF 296
FA202	FIRE ALARM MATRIX, RISER AND PROGRAMMING	164 OF 296
FX102	INTERSTITIAL MECHANICAL LEVEL FIRE SPRINKLER PLAN	165 OF 296
FX102.1	INTERSTITIAL MECHANICAL LEVEL FIRE SPRINKLER PLAN - DEDUCT ALTERNATE 4,5	166 OF 296
FX103	THIRD FLOOR ICU FIRE SPRINKLER PLAN - AREA 1	167 OF 296
FX103.1	THIRD FLOOR ICU FIRE SPRINKLER PLAN - AREA 1 - DEDUCT ALTERNATE 1	168 OF 296
FX103.2	THIRD FLOOR ICU FIRE SPRINKLER PLAN - AREA 1 - DEDUCT ALTERNATE 2	169 OF 296
FX103.3	THIRD FLOOR ICU FIRE SPRINKLER PLAN - AREA 1 - DEDUCT ALTERNATE 3	170 OF 296
FX103.4	THIRD FLOOR ICU FIRE SPRINKLER PLAN - AREA 1 - DEDUCT ALTERNATE 4	171 OF 296
FX103.5	THIRD FLOOR ICU FIRE SPRINKLER PLAN - AREA 1 - DEDUCT ALTERNATE 5	172 OF 296
FX104	THIRD FLOOR ICU FIRE SPRINKLER PLAN - AREA 2	173 OF 296
FX104.1	THIRD FLOOR ICU FIRE SPRINKLER PLAN - AREA 2 - DEDUCT ALTERNATE 4	174 OF 296
FX105	THIRD FLOOR ICU FIRE SPRINKLER PLAN - AREA 3	175 OF 296
FX105.1	THIRD FLOOR ICU FIRE SPRINKLER PLAN - AREA 3 - DEDUCT ALTERNATE 4	176 OF 296

VOLUME 3

GC001C	COVER SHEET - VOLUME 3	1C OF 296

MECHANICAL

M000	MECHANICAL COVER SHEET	177 OF 296
MD101	INTERSTITIAL SPACE - MECHANICAL - DEMOLITION	178 OF 296
MD101.4	INTERSTITIAL SPACE - MECHANICAL - DEMOLITION - DEDUCT ALTERNATE 4	179 OF 296
MD102	THIRD FLOOR - MECHANICAL - DEMOLITION	180 OF 296
MH101	INTERSTITIAL SPACE - MECHANICAL - VENTILATION	181 OF 296
MH101.4	INTERSTITIAL SPACE - MECHANICAL - VENTILATION - DEDUCT ALTERNATE 4	182 OF 296
MH102	THIRD FLOOR - MECHANICAL VENTILATION - AREA 1	183 OF 296
MH102.1	THIRD FLOOR - MECHANICAL - AREA 1 - DEDUCT ALTERNATE 1	184 OF 296
MH102.2	THIRD FLOOR - MECHANICAL - AREA 1 - DEDUCT ALTERNATE 2	185 OF 296
MH102.3	THIRD FLOOR - MECHANICAL - AREA 1 - DEDUCT ALTERNATE 3	186 OF 296
MH102.4	THIRD FLOOR - MECHANICAL - AREA 1 - DEDUCT ALTERNATE 5	187 OF 296
MH103	THIRD FLOOR MECHANICAL VENTILATION - AREA 2	188 OF 296
MH103.5	THIRD FLOOR MECHANICAL VENTILATION - AREA 2 - DEDUCT ALTERNATE 5	189 OF 296
MH104	THIRD FLOOR MECHANICAL VENTILATION - AREA 3	190 OF 296
MH104.5	THIRD FLOOR MECHANICAL VENTILATION - AREA 3 - DEDUCT ALTERNATE 5	191 OF 296
MH105	ROOF PLAN - MECHANICAL - VENTILATION	192 OF 296
MH105.4	ROOF PLAN - MECHANICAL - VENTILATION - DEDUCT ALTERNATE 4	193 OF 296
MH105.5	ROOF PLAN - MECHANICAL - VENTILATION - DEDUCT ALTERNATE 5	194 OF 296
MP101	INTERSTITIAL SPACE - MECHANICAL - PIPING	195 OF 296
MP102	THIRD FLOOR - MECHANICAL - PIPING PLAN - AREA 1	196 OF 296
MP102.1	THIRD FLOOR - MECHANICAL - PIPING PLAN - AREA 1 - DEDUCT ALTERNATE 1	197 OF 296
MP102.2	THIRD FLOOR - MECHANICAL - PIPING PLAN - AREA 1 - DEDUCT ALTERNATE 2	198 OF 296
MP102.3	THIRD FLOOR - MECHANICAL - PIPING PLAN - AREA 1 - DEDUCT ALTERNATE 3	199 OF 296
MP102.4	THIRD FLOOR - MECHANICAL - PIPING PLAN - AREA 1 - DEDUCT ALTERNATE 5	200 OF 296
MP103	THIRD FLOOR - MECHANICAL - PIPING - AREA 2	201 OF 296
MP103.5	THIRD FLOOR - MECHANICAL - PIPING - AREA 2 - DEDUCT ALTERNATE 5	202 OF 296
MP104	THIRD FLOOR - MECHANICAL - PIPING - AREA 3	203 OF 296
MP104.5	THIRD FLOOR - MECHANICAL - PIPING - AREA 3 - DEDUCT ALTERNATE 5	204 OF 296
MH301	SECTIONS - MECHANICAL	205 OF 296
MH302	SECTIONS - MECHANICAL	206 OF 296
MH401	ENLARGED PLANS - INTERSTITIAL SPACE - MECHANICAL	207 OF 296
MH401.4	ENLARGED PLANS - INTERSTITIAL SPACE - MECHANICAL - DEDUCT ALTERNATE 4	208 OF 296
MH501	MECHANICAL DETAILS	209 OF 296
MH502	MECHANICAL DETAILS	210 OF 296
MH601	MECHANICAL SCHEDULES	211 OF 296
MH602	MECHANICAL SCHEDULES	212 OF 296
MH602.5	MECHANICAL SCHEDULES	213 OF 296
MH603	MECHANICAL SCHEDULES	214 OF 296
MH603.4	MECHANICAL SCHEDULES	215 OF 296
MH603.5	MECHANICAL SCHEDULES	216 OF 296
MH604	MECHANICAL SCHEDULES	217 OF 296
MH604.4	MECHANICAL SCHEDULES	218 OF 296
MH605	MECHANICAL SCHEDULES	219 OF 296
MH605.4	MECHANICAL SCHEDULES	220 OF 296
MH605.5	MECHANICAL SCHEDULES	221 OF 296
MH610	AIR FLOW DIAGRAM	222 OF 296
MH610.4	AIR FLOW DIAGRAM	223 OF 296
MH610.5	AIR FLOW DIAGRAM	224 OF 296
MH611	HYDRONIC FLOW DIAGRAMS	225 OF 296
MP701	MECHANICAL RISER DIAGRAM	226 OF 296
MP702	MECHANICAL RISER DIAGRAM	227 OF 296
MH801	MECHANICAL CONTROLS	228 OF 296
MH801.4	MECHANICAL CONTROLS	229 OF 296
MH802	MECHANICAL CONTROLS	230 OF 296
MH901	THIRD FLOOR - LOAD MAP	231 OF 296

ELECTRICAL

E000	ELECTRICAL COVER SHEET	232 OF 296
EL101	INTERSTITIAL SPACE - ELECTRICAL - LIGHTING	233 OF 296
EL101.1	INTERSTITIAL SPACE - ELECTRICAL - LIGHTING - DEDUCT ALTERNATE 4	234 OF 296
EL102	THIRD FLOOR - ELECTRICAL - LIGHTING - AREA 1	235 OF 296
EL102.1	THIRD FLOOR - ELECTRICAL - LIGHTING - DEDUCT ALTERNATE 1 - AREA 1	236 OF 296
EL102.2	THIRD FLOOR - ELECTRICAL - LIGHTING - DEDUCT ALTERNATE 2 - AREA 1	237 OF 296
EL102.3	THIRD FLOOR - ELECTRICAL - LIGHTING - DEDUCT ALTERNATE 3 - AREA 1	238 OF 296
EL102.4	THIRD FLOOR - ELECTRICAL - LIGHTING - DEDUCT ALTERNATE 4 - AREA 1	239 OF 296
EL103	THIRD FLOOR - ELECTRICAL - LIGHTING - AREA 2	240 OF 296
EL103.1	THIRD FLOOR - ELECTRICAL - LIGHTING - DEDUCT ALTERNATE 5 - AREA 2	241 OF 296
EL104	THIRD FLOOR - ELECTRICAL - LIGHTING - AREA 3	242 OF 296
EL104.1	THIRD FLOOR - ELECTRICAL - LIGHTING - DEDUCT ALTERNATE 5 - AREA 3	243 OF 296
EP101	BASEMENT LEVEL - ELECTRICAL - POWER	244 OF 296
EP102	EXISTING BASEMENT - ELECTRICAL - POWER	245 OF 296
EP103	INTERSTITIAL SPACE - ELECTRICAL - POWER	246 OF 296
EP103.1	INTERSTITIAL SPACE - ELECTRICAL - POWER - DEDUCT ALTERNATE 4 & 5	247 OF 296
EP104	THIRD FLOOR-ELECTRICAL - POWER - AREA 1	248 OF 296
EP104.1	THIRD FLOOR - ELECTRICAL - POWER - DEDUCT ALTERNATE 1 - AREA 1	249 OF 296
EP104.2	THIRD FLOOR - ELECTRICAL - POWER - DEDUCT ALTERNATE 2 - AREA 1	250 OF 296
EP104.3	THIRD FLOOR - ELECTRICAL - POWER - DEDUCT ALTERNATE 3 - AREA 1	251 OF 296
EP104.4	THIRD FLOOR - ELECTRICAL - POWER - DEDUCT ALTERNATE 4 - AREA 1	252 OF 296
EP105	THIRD FLOOR - ELECTRICAL - POWER - AREA 2	253 OF 296
EP105.1	THIRD FLOOR - ELECTRICAL - POWER - DEDUCT ALTERNATE 5 - AREA 2	254 OF 296
EP106	THIRD FLOOR - ELECTRICAL - POWER - AREA 3	255 OF 296
EP106.1	THIRD FLOOR - ELECTICAL - POWER - DEDUCT ALTERNATE 5 - AREA 3	256 OF 296
EP107	OVERALL THIRD FLOOR - ELECTRICAL - POWER	257 OF 296
EP108	ROOF PLAN - ELECTRICAL - POWER	258 OF 296
EP108.1	ROOF PLAN - ELECTICAL - POWER - DEDUCT ALTERNATE 4 & 5	259 OF 296
E501	ELECTRICAL DETAILS	260 OF 296
E502	ELECTRICAL DETAILS	261 OF 296
E503	ELECTRICAL DETAILS	262 OF 296
E601	ELECTRICAL SCHEDULES	263 OF 296
E602	ELECTRICAL SCHEDULES	264 OF 296
E603	ELECTRICAL ONE-LINE DIAGRAM	265 OF 296

TECHNOLOGY

T000	TECHNOLOGY COVER SHEET	266 OF 296
T001	GENERAL TECHNOLOGY EQUIPMENT SCHEDULE	267 OF 296
TC101	INTERSTITIAL SPACE - TECHNOLOGY - STRUCTURED CABLING	268 OF 296
TC102	THIRD FLOOR - TECHNOLOGY - STRUCTURED CABLING - AREA 1	269 OF 296
TC102.1	THIRD FLOOR - TECHNOLOGY - STRUCTURED CABLING - DEDUCT ALTERNATE 1 - AREA 1	270 OF 296
TC102.2	THIRD FLOOR - TECHNOLOGY - STRUCTURED CABLING - DEDUCT ALTERNATE 2 - AREA 1	271 OF 296
TC102.3	THIRD FLOOR - TECHNOLOGY - STRUCTURED CABLING - DEDUCT ALTERNATE 3 - AREA 1	272 OF 296
TC102.4	THIRD FLOOR - TECHNOLOGY - STRUCTURED CABLING - DEDUCT ALTERNATE 4 - AREA 1	273 OF 296
TC103	THIRD FLOOR - TECHNOLOGY - STRUCTURED CABLING - AREA 2	274 OF 296
TC104	THIRD FLOOR - TECHNOLOGY - STRUCTURED CABLING - AREA 3	275 OF 296
TC105	ROOF - TECHNOLOGY - STRUCTURED CABLING	276 OF 296
TS101	INTERSTITIAL SPACE - TECHNOLOGY - SYSTEMS	277 OF 296
TS102	THIRD FLOOR - TECHINOLOGY - SYSTEMS - AREA 1	278 OF 296
TS102.1	THIRD FLOOR - TECHNOLOGY - SYSTEMS - DEDUCT ALTERNATE 1 - AREA 1	279 OF 296
TS102.2	THIRD FLOOR - TECHNOLOGY - SYSTEMS - DEDUCT ALTERNATE 2 - AREA 1	280 OF 296
TS102.3	THIRD FLOOR - TECHNOLOGY - SYSTEMS - DEDUCT ALTERNATE 3 - AREA 1	281 OF 296
TS103	THIRD FLOOR - TECHNOLOGY - SYSTEMS - AREA 2	282 OF 296
TS102.4	THIRD FLOOR - TECHNOLOGY - SYSTEMS - DEDUCT ALTERNATE 4 - AREA 1	283 OF 296
TS104	THIRD FLOOR - TECHNOLOGY - SYSTEMS - AREA 3	284 OF 296
TS103.5	THIRD FLOOR - TECHNOLOGY - SYSTEMS - DEDUCT ALTERNATE 5 - AREA 2	285 OF 296
TS105	ROOF - TECHNOLOGY - SYSTEMS	286 OF 296
T401	ENLARGED PLANS AND ELEVATIONS - TECHNOLOGY	287 OF 296
T501	TECHNOLOGY RISER DIAGRAMS	288 OF 296
T502	TECHNOLOGY RISER DIAGRAMS	289 OF 296
T503	TECHNOLOGY RISER DIAGRAMS	290 OF 296
TS104.5	THIRD FLOOR - TECHNOLOGY - SYSTEMS - AREA 3	291 OF 296
T504	TECHNOLOGY RISER DIAGRAMS	292 OF 296
T505	TECHNOLOGY RISER DIAGRAMS	293 OF 296
T506	TECHNOLOGY RISER DIAGRAMS	294 OF 296
T601	TECHNOLOGY DETAILS AND SCHEDULES	295 OF 296
T602	TECHNOLOGY DETAILS AND SCHEDULES	296 OF 296

FULLY SPRINKLERED
CONSTRUCTION DOCUMENTS

No.	Date	Revisions

CONSULTANTS:

STRUCTURAL ENGINEER:
KPFF CONSULTING ENGINEERS - ST. LOUIS
1630 DES PERES RD, SUITE 100
SAINT LOUIS, MO 63131

MECHANICAL/ELECTRICAL:
KJWW ENGINEERING CONSULTANTS - ST. LOUIS
#15 SUNNEN DRIVE, SUITE 104
ST. LOUIS, MO 63141

PLUMBING:
303RD ENGINEERING GROUP, LLC
1935 ARSENAL STREET
ST. LOUIS, MO 63118

ESTIMATING:
KWAME BUILDING GROUP
1204 WASHINGTON AVE. SUITE 200
ST. LOUIS, MO 63103

LIFE SAFETY/FIRE PROTECTION:
CODE CONSULTANTS, INC.
2043 WOODLAND PARKWAY, SUITE 300
ST. LOUIS, MO 63146

ACOUSTICAL ENGINEERS:
ACOUSTICONTROL LLC
1709 WASHINGTON AVENUE, LOFT 300
ST. LOUIS, MO 63103

COMMISSIONING:
ZODIAC INTERNATIONAL
16100 CHESTERFIELD PARKWAY, SUITE 365
CHESTERFIELD, MO 63017

ENVIRONMENTAL:
ENVIRONMENTAL CONSULTANTS, LLC
#6 MEADOW HEIGHTS PROFESSIONAL PARK DR.
COLLINSVILLE, IL
62234

ARCHITECT/ENGINEERS:

CHRISTNER

ARCHITECTS | DESIGNERS | PLANNERS | LANDSCAPE ARCHITECTS

168 N MERAMEC, SUITE 400 | ST. LOUIS, MISSOURI 63105
TEL 314 725 2927 | FAX 314 725 2928 |
CHRISTNERINC.COM

THE SEAL (S) AND SIGNATURE(S) APPLY ONLY TO THE DOCUMENT TO WHICH THEY ARE AFFIXED, AND WE EXPRESSLY DISCLAIM ANY RESPONSIBILITY FOR ALL OTHER PLANS, SPECIFICATIONS, ESTIMATES, REPORTS, OR OTHER DOCUMENTS OR INSTRUMENTS RELATING TO OR INTENDED TO BE USED FOR ANY PART OF PARTS OF THE PROJECT.
© COPYRIGHT 2012 CHRISTNER INC.

DIRECTOR OF SPECIALTY CARE	INFECTION CONTROL PRACTITIONER	CHIEF ENGINEER	ASSISTANT DIRECTOR	ASSOCIATE DIRECTOR OF PATIENT SERVICES	CHIEF OF STAFF	ASSOCIATE DIRECTOR	MEDICAL CENTER DIRECTOR

Drawing Title: COVER SHEET - VOLUME 2

Project Title: INTENSIVE CARE UNIT

Location: HARRY S. TRUMAN VAMC

Date	Checked	Drawn	Approved
8/22/14	Checker	Author	Approver

Project Number: 589-330

Building Number: 1

Drawing Number: GI001B

Dwg. 1B of 296

Office of Construction and Facilities Management

Department of Veterans Affairs

VA FORM 08-6231 PRINTED ON

ORIGINAL SIZE OF SHEET IS 30" X 42"

DIVISION 1 - GENERAL REQUIREMENTS

1.1 CONSTRUCTION MEANS AND METHODS

A. Contractor agrees that Contractor shall assume sole and complete responsibility for job site conditions during the course of the Work, including safety of all persons and property; that this requirement shall apply continuously and not be limited to normal working hours; and that Contractor shall defend, indemnify, and hold Owner and Structural Engineer harmless from any and all liability, real or alleged, in connection with the performance of the Work on this Project, excepting for liability arising from the sole negligence of Owner or Structural Engineer.

B. The Contract Documents represent the finished structure. They do not include the method of construction. Contractor shall provide all measures necessary to protect the structure during construction. Such measures shall include, but not be limited to: protection of subgrade from freezing conditions, bracing, shoring for loads due to construction equipment, temporary structures, and partially completed work. Observation visits to the site by Structural Engineer shall not include inspection of the above items.

C. KPFF Consulting Engineers shall not have control over or charge of and shall not be responsible in any way for construction means, methods, techniques, sequences, or procedures, or for safety or safety precautions and programs in connection with any construction activities, since these are solely Contractor's responsibility under the Contract.

D. KPFF Consulting Engineers shall not be responsible for Contractor's schedule or failures to carry out any construction activities in accordance with the Contract Documents. KPFF Consulting Engineers shall not have control over or charge of actions of Contractor, Subcontractor, or any of their Agents, or employees, or any other persons performing portions of any construction activities.

E. The structure is stable only in its completed form. Temporary supports required for stability of the structure during all intermediate stages of construction shall be designed and provided by Contractor.

1.2 SUBMITTALS

A. Submittals prepared by Subcontractors shall be reviewed by Contractor prior to submitting to Architect.

B. Reproduction of Structural Drawings shall be in accordance with AISC Code of Standard Practice.

C. Contractor shall verify the structurally supported equipment weights, opening sizes, and locations indicated on the Structural Drawings with Documents from other disciplines and notify Architect of any discrepancies.

D. Contractor shall submit Shop Drawings showing size, method of anchorage, weight, openings, and locations of equipment not indicated on the Structural Drawings prior to ordering for review by Structural Engineer to determine adequacy of the structure.

E. All submittals reviewed by Structural Engineer are reviewed for general conformance with design concept only and does not relieve the fabricator/vendor of responsibility for conformance with design drawings and Specifications, all of which have priority over submittals.

F. Submittals shall be reviewed within 10 working days after being received by Structural Engineer.

1.3 QUALITY REQUIREMENTS

A. Reference to standard specifications or codes of any technical society, organization, or association or to codes of local or state authorities, shall mean the standards in effect as of date of the Contract Documents, unless otherwise noted.

B. Contract Documents shall govern in the event of a conflict with standard specifications or codes of any technical society, organization, or association.

C. No provision of any referenced standard specification or code, whether or not specifically incorporated by reference in the Contract Documents, shall be effective to change the duties and responsibilities of Owner, Architect, Structural Engineer, Contractor, or any of their Consultants, Agents, or employees from those set forth in the Contract Documents, nor shall it be effective to assign to Structural Engineer or any of Structural Engineer's Consultants, Agents, or employees any duty or authority to supervise or direct the furnishing or performance of the Work or any duty or authority to undertake responsibilities contrary to the provisions of the Contract Documents.

D. All omissions and conflicts within the Contract Documents shall be brought to the attention of Architect prior to proceeding with the Work.

E. Contractor shall verify dimensions and conditions at the job site. Any discrepancies between the conditions found and those indicated in the Contract Documents shall be brought to the attention of Architect prior to proceeding with the Work.

F. See Documents by other disciplines for floor, wall, and roof openings, trenches, pits, pipe sleeves, equipment pads, metal pan stairs, miscellaneous iron, etc.

G. No pipes, ducts, chases, etc. shall be placed in structural beam and column members nor shall any structural member be cut for pipes, ducts, etc., unless noted otherwise. Notify Structural Engineer when Documents by other disciplines show openings, pockets, etc. not indicated in the Structural Drawings, but are located in structural members. Contractor shall obtain prior approval from Structural Engineer for installation of such pipes, ducts, chases, etc.

H. Details labeled "Typical" on the Structural Drawings apply to all situations occurring on Project that are the same or similar to those locations specifically indicated. Where a detail is not indicated, the detail shall be the same as for other similar conditions.

I. The design responsibility of the elements listed below is being delegated to a Specialty Structural Engineer hired by the Contractor. The designated elements shall be designed in accordance with the Building Code and specific requirements in the contract documents by an engineer licensed in the state where the Project is located. Submittals shall be sealed by the responsible licensed Engineer. The following elements and their connections shall be designed by a Specialty Structural Engineer:
1. Temporary bracing and shoring
2. Structural steel connections
3. Cold-formed metal framing
4. Seismic Anchorage and Sway Bracing of Mechanical, Electrical and Plumbing Systems Components
5. Ladders
6. Windows and curtain wall systems
7. Patient service boom support and bracing.

1.4 STRUCTURAL SPECIAL INSPECTIONS

A. Special inspections shall be in accordance with the Building Code and the Statement Of Special Inspections on sheet S-002.

B. Special inspection reports shall be furnished to Building Official, Owner, Architect, Structural Engineer, and Contractor. Discrepancies shall be brought to the attention of Contractor, and if not corrected, shall be reported to Building Official, Owner, Architect, and Structural Engineer.

C. The Special Inspector shall submit a final report stating that the structural work was, to the best of the Special Inspector's knowledge, performed in accordance with the Contract Documents.

D. The following types of work require Special Inspections: (Refer to the Building Code and Specifications for detailed inspection requirements.)
1. Concrete Construction
2. Steel Construction
3. Masonry construction
4. Wall Panels and Veneers
5. Sprayed Fire resistive Materials

1.5 DESIGN CRITERIA:

A. The structure is designed in accordance with the following building and design codes and standards.
1. ICC International Building Code, 2009 Edition
2. ASCE 7-05, Minimum Design Loads for Buildings and Other Structures
3. Department of Veterans Affairs document "H-18-8 Seismic Design Requirements", February 2011
4. Department of Veterans Affairs, Physical Security Manual: Mission Critical Facilities, July 2007.
5. ACI 318-05, Building Code Requirements for Structural Concrete
6. AISC 360-05 Specification for Structural Steel Buildings
7. AISC 341-05 Seismic Provisions for Structural Steel Buildings, including Supplement No. 1 dated 2005.

B. No provisions have been made for the future horizontal or vertical expansion.

C. Gravity Loads:
1. Uniform Roof Live Loads:
   a. Live Load: 20 psf
   b. Snow Load:
      1) Ground Snow Load: 20 psf
      2) Flat Roof Snow Load: 24 psf
      3) Snow Exposure Factor: 1.0
      4) Snow Importance Factor: 1.2
      5) Snow Thermal Factor: 1.0
2. Uniform Floor Live Loads (reduced as allowed by the Building Code, unless otherwise noted):
   Clinical & Support Services 80 psf
   Corridors 100 psf
   Mechanical Rooms 125 psf
   Stairs 100 psf
3. Concentrated Floor Live Loads
   a. Loads are distributed over an area of 2-1/2 sq. ft., unless noted otherwise.
   Access floor systems 2000 lb.
   Catwalks - for maintenance access 300 lb.
   Stairs 300 lb. (over 4 sq. in.)
4. Concentrated Lateral Live Loads
   a. Handrails assemblies:
      1) Top Rail: 200 lb. or 50 lb/ft applied non-concurrently in any direction.
      2) Infill: 50 lb. applied over 1 sq. ft. applied non-concurrently with the top rail load.

D. Lateral Loads:
1. Wind Design Data
   a. Basic Wind Speed: 90MPH
   b. Importance Factor: 1.15
   c. Exposure: B
   d. Enclosure Classification: Enclosed Building
   e. Internal Pressure Coefficient: +/-0.18
2. Earthquake Design Data
   a. Seismic Importance Factor:1.5
   b. Mapped Spectral Response Accelerations: Ss=0.198, S1=0.088
   c. Site Classification: C
   d. Spectral Response Coefficients: Sds=0.158, Sd1=0.10
   e. Occupance Category: IV
   f. Seismic Design Category: C
   g. Basic Structural System: Building Frame System
   h. Basic Seismic Force Resisting System: Steel Systems- Not specifically detailed for seismic resistance (NDS) for building north of Column Line 3.2 and steel moment frames (SMF) for building south of Column Line 3.2.
   i. Response Modification Factor: R = 3 (NDS)
   j. Deflection Amplification Factor: Cd = 3 (NDS)
   k. Response Modification Factor: R = 5(SMF)
   l. Deflection Amplification Factor: Cd = 5.5(SMF)
3. MEP Seismic Anchorage:
   a. Contractor shall design and install MEP supports in accordance with the latest local Ordinances and Building Code.

DIVISION 2- FOUNDATIONS (NOT APPLICABLE)

DIVISION 3 - CONCRETE

3.1 REINFORCING

A. GENERAL
1. Reinforcing steel shall be ASTM A615, Grade 60, deformed bars, unless noted otherwise. Welding of ASTM A615, Grade 60 reinforcing is not allowed.
2. Reinforcing steel to be welded shall be ASTM A706, deformed bars.
3. Welded wire reinforcing shall be ASTM A185, contact lap spliced 12 inches minimum.
4. All reinforcing bars shall be detailed, fabricated, supported, and placed in accordance with ACI 315-99 "Details and Detailing of Concrete Reinforcement" and CRSI's "Manual of Standard Practice," 2001.
5. Reinforcing, including dowels, shall be securely tied and cast with the lower member. Placing reinforcing after concrete has been placed is not permitted.
6. Field bending of reinforcing partially embedded in concrete is not allowed unless specifically noted in the Structural Documents or approved by Structural Engineer.
7. Provide corner bars to match horizontal reinforcing at corners and intersections.
8. Adhesive for reinforcing dowels into existing concrete shall be Hilti HIT HY 150 MAX-SD or approved equal. Minimum embedment length shall be 12 bar diameters, unless noted otherwise.
9. All reinforcing shall be contact lap spliced or doweled as follows:
   #3 bars -- 28" #7 bars -- 81"
   #4 bars -- 37" #8 bars -- 93"
   #5 bars -- 47" #9 bars -- 105"
   #6 bars -- 56" #10 bars -- 118"
   #11 bars -- 131"

B. SLABS
1. Provide slab bolsters, high chairs, and #5 support bars as necessary to maintain proper placement of reinforcing.
2. Provide 2-#5 top x 5'-0" diagonals at corners of openings and re-entrant corners, unless noted otherwise.

3.2 CAST-IN-PLACE CONCRETE

A. Reinforced concrete shall have the following minimum 28-day compressive strengths:
1. Class A 3000 psi normal weight concrete
2. Class B 3500 psi lightweight concrete
3. Class C 4000 psi normal weight concrete

B. Place concrete as follows:
1. Class A:
   a. Housekeeping pads
2. Class B:
   a. Lightweight concrete slab on metal deck
3. Class C:
   a. Normal weight concrete slab
   b. Normal weight concrete slab on metal deck
   c. Concrete Curb

C. All concrete to have the following unit weights (+/- 3 pcf):
1. Normal weight concrete: plastic = 145 pcf
2. Lightweight: plastic = 117 pcf, air-dried = 110 pcf

D. All concrete exposed to freezing and thawing and deicer chemicals shall have 6% (+1%/-1.5%) air entrainment. Do not air entrain concrete to be trowel finished.

E. Provide concrete cover for reinforcing as follows:
1. Concrete cast against and permanently exposed to earth........3"
2. Concrete exposed to earth or weather......................................2"
3. Concrete not exposed to weather or in contact with ground:
   a. Slabs and walls...3/4"
   b. Beams and columns...................................1-1/2"

F. For concrete cast on metal deck, concrete thickness indicated is nominal. Contractor shall allow for the deflection of the floor assembly due to the wet weight of the concrete when calculating concrete quantity.

G. Locate construction joints for joists, beams, girders, and slabs in the middle 1/3 of the span. Place joints so they do not compromise the strength of the structure. Offset joints in a girder at least twice the beam width from a beam/girder intersection.

H. Interface of construction joints shall be roughened to a full amplitude of 1/4". Surface of construction joints shall be clean and free of laitance. Immediately before new concrete is placed, construction joints shall be wetted and standing water removed.

I. See Architectural Drawings for waterstops.

J. Conduit and pipes embedded in walls, beams, or slabs shall be no larger in outside dimension than 1/3 the overall member thickness or 2" maximum, and shall be placed no closer than 3 diameters or widths on center.

K. Conduit and pipes, with their fittings, embedded within a column shall not displace more than 4 percent of the area of the column cross section.

L. Provide 4" high concrete housekeeping pads under equipment. Pads shall extend beyond equipment 6" nominal on all sides. Apply bonding agent to existing concrete slab prior to placing housekeeping pad. See Documents from other disciplines for equipment locations.

M. At floor drains, locally slope floor towards drain. See Documents from other disciplines for drain locations.

N. Unless noted otherwise, structural slabs exposed to weather shall be sloped approximately 1/4 inch per foot away from occupied space toward floor drains, scuppers, gutters, etc. For exterior non-structural flatwork (eg. sidewalks, pavement) reference Civil site plan and specifications.

O. See Architectural Documents for molds, grooves, ornaments, clips, etc. required to be encased in concrete and for location of floor finishes and slab depressions.

DIVISION 4 - CONCRETE MASONRY

4.1 REINFORCING

A. Reinforcing steel shall be ASTM A615, Grade 60, deformed bars, unless noted otherwise. Welding of ASTM A615, Grade 60 reinforcing is not allowed.

B. Reinforcing steel to be welded shall be ASTM A706, deformed bars.

C. Joint reinforcing shall be ladder type conforming to ASTM A951, with prefabricated corner and tee units at corners and intersections.

D. Dowels to supporting structure shall be same grade, size, and number as vertical reinforcing.

E. Provide corner bars to match horizontal reinforcing at corners and intersections.

F. Vertical reinforcing shall be centered in wall, unless noted otherwise.

G. Reinforcing shall be lapped 48 bar diameters with contact lap splices. Joint reinforcing shall be lapped 6".

H. Reinforce concrete masonry vertically with #5 rebar full height at 32" o.c., unless noted otherwise.

I. Space joint reinforcement at 16" o.c. vertically typical and at 8" o.c. vertically at parapets and at cantilevered walls, unless noted otherwise.

J. Reinforce bond beams with 2-#5 rebars continuous, unless noted otherwise.

K. Provide #5 rebar at all sides of openings, to extend a minimum of 30" beyond the opening.

4.2 CONCRETE MASONRY

A. Concrete masonry units shall be ASTM C90, normal weight.

B. Provide concrete unit masonry that develops the following minimum net-area compressive strength (f'm) at 28-days: 1500 psi.

C. Mortar shall be of the following types:
   Bearing walls: Type M or S

D. Grout shall conform to ASTM C476. Grout shall be proportioned with a slump of 8" to 11" using 3/8" nominal maximum size course aggregate.

E. Grout vertical reinforced cells and bond beams solid.

F. Insulation shall not be permitted in reinforced cells.

G. Grout concrete masonry below grade solid. Grout cavities of multi-wythe walls below grade.

H. All vertical cells to be grouted shall have vertical alignment to maintain a continuous unobstructed cell area not less than 2" x 3".

I. Grout solid under beams and lintels for full height of wall.

J. Conduits, pipes, and sleeves shall be no closer than 3 diameters on center.

K. Maximum area of vertical conduits, pipes, or sleeves placed in columns or pilasters shall not displace more than 2 percent of the net cross section.

DIVISION 5 - METALS

5.1 STRUCTURAL STEEL

A. GENERAL
1. Structural steel fabrication and erection shall comply with the applicable provisions of the following:
   a. AISC 360-05 Specification for Structural Steel Buildings
   b. AISC 303-05 Code of Standard Practice for Steel Buildings and Bridges
   c. Specification for Structural Joints using ASTM A325 or A490 Bolts
2. Materials shall conform to the following, unless noted otherwise.
   a. W's and WT's ASTM A992
   b. Plates & other shapes ASTM A36
   c. HSS: ASTM A500, Grade B
   d. Pipe ASTM A53, Type E or S, Grade B
   e. Bolts ASTM A325, 3/4" diameter (min.), hex head
   f. Anchor Rods ASTM F1554, Grade 105 with A36 washers and heavy hex nuts
   g. Threaded Rod ASTM A36
   h. Headed Studs AWS D1.1, Type B
   i. Electrodes Matching strength, 70 ksi min.
3. Detail steel beam connections as simple span beams, unless noted otherwise.
4. Beam connections not fully detailed shall be designed by Contractor for factored forces indicated in the Structural Drawings considering the forces to be acting simultaneously.
   a. Minimum beam shear reaction is 15 kips.
5. All bolted connections shall be designed as snug-tight bearing connections with threads included in the shear plane, unless noted otherwise. 8. Bolted connections at the following locations s as fully tensioned bearing connections with threads included in the shear plane:
   a. Moment frames
   b. Vertical braces
   c. Column splices
   d. Beam and girder connections to columns
   e. Hangers
9. Bolted connections designated as fully tensioned shall be installed with direct-tension indicator washers or tension-control bolts.
10. All steel beams bearing on concrete or masonry shall have 8" minimum bearing, unless noted otherwise.
11. Where items are to be anchored to concrete or masonry, except at column baseplates, use standard sized holes in steel member, unless noted otherwise.
12. Use prequalified welded joints in accordance with AISC and AWS D1.1:2000. Non-prequalified joints shall be qualified prior to fabrication.
13. Studs for composite beams at 5-1/4" thick slab shall be 3/4" diameter x minimum 4", maximum 4-3/4" long after welding.
14. Studs for composite beams at 6-1/4" thick slab shall be 3/4" diameter x minimum 5", maximum 5-3/4" long after welding.

B. STEEL LINTELS
1. Loose lintels for 4" and 8" masonry shall be the following, one angle (LLV) per 4" width of masonry:
   L3-1/2x3-1/2x5/16 for spans less than 4'-11
   L5x3-1/2x5/16 for spans between 5'-0" and 7'-11"
   L6x3-1/2x5/16 for spans between 8'-0" and 9'-11"
   L7x4x3/8 for spans between 10'-0" and 12'-11"
2. Loose lintels for 6" and 12" masonry shall be the following, one angle per 6" width of masonry:
   L5x5x5/16 for spans less than 4'-11"
   L5x5x3/8 for spans between 5'-0" and 8'-0"
3. Double angle lintels back to back shall be bolted at 32" o.c. maximum spacing, with 5/8" diameter A307 bolts, minimum of two bolts per span.
4. At beam lintels with continuous plates, the plate width shall be 1" less than the nominal width of the supported wall. Plate thickness shall be 5/16", unless noted otherwise.
5. Lintels bearing on masonry or concrete shall have 8" minimum bearing, unless noted otherwise.
   a. Each lintel, unless noted otherwise, shall be field welded to an embedded plate with two 3" long x 3/16" fillet welds. Minimum width of embedded steel plate shall be 4" larger than the beam flange width.
   b. Where less than 1'-0" of masonry exists at the end of the beam adjacent to a column, wall, or other vertical member, extend the beam and provide a connection to the column or wall.
6. Exterior lintels whether loose or attached to the structure shall be galvanized.
7. Contractor shall coordinate with the Structural Drawings and Documents of other disciplines for openings.

C. ANCHORS TO CONCRETE AND MASONRY
1. Anchors shall be adhesive anchors, unless noted otherwise.
2. Expansion anchors shall be Hilti Kwik Bolt TZ anchors or approved equal. Anchors shall be plain, uncoated except provide galvanized anchors where supported item is galvanized.
3. Adhesive anchors shall be Hilti HIT HY adhesive anchors or approved equal. Use HY 150 MAX-SD adhesive when anchoring into concrete or grouted concrete masonry base material. Use HY 20 adhesive plus a screen tube when anchoring to or through ungrouted concrete masonry or multiwythe masonry base material. Anchors shall be plain, uncoated except provide galvanized anchors where supported item is galvanized.
4. When installing anchors, do not cut existing reinforcing. Install anchors to accommodate the standard hole size in steel.
5. Expansion anchor embedment depth shall be as follows, unless noted otherwise:
   3/8" diam. : 2-1/2" embedment
   1/2" diam. : 3-1/2" embedment
   5/8" diam. : 4" embedment
   3/4" diam. : 4-3/4" embedment
   1" diam. : 6" embedment
6. Adhesive anchor embedment depth shall be as follows, unless noted otherwise:
   3/8" diam. : 3-1/2" embedment
   1/2" diam. : 4-1/4" embedment
   5/8" diam. : 5" embedment
   3/4" diam. : 5-3/4" embedment
   1" diam. : 8-1/4" embedment

5.2 METAL DECK

A. GENERAL
1. Deck shall be continuous over 3 spans, unless noted otherwise.
2. At supports parallel to the deck span, raise steel supports or provide shims at bearing points if the deck valley does not engage the support.
3. Where deck is welded to supports, provide welding washers for deck with design thickness less than 0.028".
4. At Contractor's option, Hilti X-EDN and ENP fastening systems or approved equal may be used in lieu of welds to supports.
5. Metal deck accessories, including but not limited to: girder fillers, Z-closures, and cover plates; that are integral with the floor diaphragm or roof diaphragm shall be of the same material, finish and minimum thickness as the metal deck. Accessories shall be anchored to supporting members by arc spot welds or self drilling screws at 12 inch maximum spacing.

B. ROOF DECK
1. Roof deck shall be designed, fabricated, and installed in accordance with "SDI Specifications and Commentary for Steel Roof Deck" in SDI Publication No. 29, 1995.
2. Roof deck shall be galvanized.
3. Do not support ducts, ceilings, lights, plumbing, sprinklers, etc. from the roof deck.

C. COMPOSITE FLOOR & ROOF DECK
1. Composite floor deck shall be designed, fabricated, and installed in accordance with "SDI Specifications and Commentary for Composite Steel Floor Deck" in SDI Publication No. 29, 1995.
2. Composite floor deck shall be galvanized.
3. Shore composite floor deck where required by manufacturer.
4. 2" composite deck with design thickness 0.0358" (20 gauge) shall have the following minimum properties: Ip=0.418 in^4/ft, In=0.415 in^4/ft, Sp=0.355 in^3/ft, Sn=0.360 in^3/ft, Fy=40 ksi.
5. Composite floor deck shall be welded to supports, both perpendicular and parallel to the deck, with 5/8" diameter puddle welds and fastened at sidelaps with No. 10 screws as follows:
   a. Typical installation, unless noted otherwise:
      1) Weld Pattern: 36/4
      2) Sidelap Fasteners: 6/span, maximum 18"

5.3 COLD-FORMED METAL FRAMING

A. GENERAL
1. Cold-formed metal framing shall be designed, fabricated, and erected in accordance with AISI's "Specification for the Design of Cold-Formed Steel Structural Members," 1996. Exterior studs and connections have been designed for blast loads and shall be as indicated on structural drawings.
2. Materials shall conform to the following, unless noted otherwise.
   a. Structural Steel Sheet ASTM A653 SS
      1) 0.0451 inch thick or less Grade 33
      2) 0.0566 inch thick or greater Grade 50, Class 1
   b. Self-Drilling Screws SAE J78
   c. Electrodes E60XX

B. Complete, uniform, and level bearing support shall be provided for the top and bottom tracks of stud walls, or full size shims shall be installed to provide such bearing.

C. Studs shall be installed with their bearing ends positioned flush against the inside track web.

D. Full-height double studs shall be provided at the ends of partitions, at wall openings, beneath bar joists, beneath trusses, and at other locations indicated in the Structural Drawings.
1. Weld the flanges of double studs together full height using 2" of weld at 12" o.c. each side, unless noted otherwise.

E. Anchor stud tracks with low-velocity powder actuated fasteners with a minimum shank diameter of 0.145", and a minimum penetration of 1-1/8", unless noted otherwise.
1. Locate anchors at 3" from the ends of partitions, and at 6" o.c. (maximum), 4" o.c. (minimum) throughout.

F. Provide sheathing attached to both faces of wall studs throughout the length of the studs or provide bridging at 4'-0" o.c.

G. Provide stud wall bridging according to manufacturer's recommendations.

H. Splices in studs shall not be permitted. Do not cut studs.

I. Slide clip connections shall be as indicated on structural drawings. Slide clips not detailed shall be designd for a minimum lateral force of 500Lbs wherever required.

J. Wall studs shall have the following minimum effective properties. In the designation below, 362 is the member depth in 1/100 inches, S is the member style, 162 is the flange width in 1/100 inches, and 54 is the material thickness in mils.

Designation	Design Thick.	Ix, in4	Sx, in3	A, in2	Fy, ksi
362S162-43	0.0451	0.710	0.389	0.340	33
362S162-54	0.0566	0.873	0.468	0.422	50
362S162-68	0.0713	1.069	0.584	0.524	50
600S162-43	0.0451	2.316	0.767	0.447	33
600S162-54	0.0566	2.860	0.927	0.566	50
600S162-68	0.0713	3.525	1.164	0.693	50
800S162-43	0.0451	4.633	1.158	0.537	33
800S162-54	0.0566	5.736	1.397	0.670	50
800S162-68	0.0713	7.089	1.757	0.836	50

K. At locations requiring welding of or to metal studs, minimum stud thickness shall be 54 mil.

L. Provide matching thickness track (54 mil minimum) at top and bottom of stud walls and at headers for stud walls.

5.4 GRATING
1. Grating shall be W-19-4 (2 x 3/16) steel, unless noted otherwise.
2. Provide saddle clips and machine bolts at 24" o.c. minimum, (minimum 4 per section of grating - 2 per bearing side).

ABBREVIATIONS

A

AB ANCHOR BOLT
ADDL ADDITIONAL
AESS ARCHITECTURALLY EXPOSED STRUCTURAL STEEL
AFF ABOVE FINISH FLOOR
ALT ALTERNATE
AHR ANCHOR, ANCHORAGE
APPROX APPROXIMATE(LY)
ARCH ARCHITECTURAL/ARCHITECT

B

BAL BALANCE
B/ BOTTOM OF
B/B BACK TO BACK
BC BOTTOM OF CONCRETE
BL BRICKLEDGE
BLDG BUILDING
BLKG BLOCKING
BM BEAM
BMD BOTTOM OF METAL DECK
BO_ BOTTOM OF __
BOT BOTTOM
BP BOTTOM OF PIER
BSMT BASEMENT
BRDG BRIDGING
BRG BEARING
BT BENT
BTWN BETWEEN
BW BOTTOM OF WALL

C

CAM CAMBER
CANTL CANTILEVER
CFMF COLD-FORMED METAL FRAMING
CJ CONTROL JOINT OR CONSTRUCTION JOINT
CL CENTER LINE
CLR CLEAR
CMU CONCRETE MASONRY UNIT
COL COLUMN
CONC CONCRETE
CONN CONNECT
CONSTR CONSTRUCTION
CONT CONTINUOUS
CONTR CONTRACTOR
CONX CONNECTION
COORD COORDINATE
CS COLUMN STRIP
CTR CENTER
C TO C CENTER TO CENTER

D

DB DIAMETER OF REBAR
DBL DOUBLE
DEG DEGREE
DET DETAIL
DIA DIAMETER
DIAG DIAGONAL
DIM DIMENSION
DL DEAD LOAD
DN DOWN
DWG DRAWING
DWL DOWEL

E

EA EACH
EBF EXCENTRICALLY BRACED FRAME
EE EACH END
EF EACH FACE
EJ EXPANSION JOINT
EL ELEVATION
ELEC ELECTRIC/ELECTRICAL
ELEV ELEVATOR
EMBED EMBEDMENT
ENGR ENGINEER
EOS EDGE OF SLAB
EQ EQUAL
EQUIP EQUIPMENT
ES EACH SIDE
EW EACH WAY
EXIST EXISTING
(E) EXISTING
EXP EXPANSION
EXP BT EXPANSION BOLT
EXT EXTERIOR

F

FAB FABRICATOR
FD FLOOR DRAIN
FDTN FOUNDATION
FF FAR FACE
FF EL FINISH FLOOR ELEVATION
FIN FLR FINISH FLOOR
FIN GR FINISH GRADE
FH FLAT HEAD
FIN FINISH
FLG FLANGE
FLR FLOOR
FOB FACE OF BRICK
FOC FACE OF CONCRETE
FS FAR SIDE
FT FEET, FOOT, FIRE TREATED
FTG FOOTING
FUT FUTURE

G

GA GAGE
GALV GALVANIZED
GLU LAM GLUE LAMINATED WOOD
GR BM GRADE BEAM
GT GIRDER TRUSS

H

H HIGH
HCT HOLLOW CLAY TILE
HD HEADED
HK HOOK
HORIZ HORIZONTAL
HPT HIGH POINT
HT HEIGHT
HVAC HEATING, VENTILATING & AIR CONDITIONING

I

ID INSIDE DIAMETER
IF INSIDE FACE
IMF INTERMEDIATE MOMENT FRAME
IN INCH
INFO INFORMATION
INT INTERIOR

J

JS JOIST SUBSTITUTE
JST JOIST
JT JOINT

K

K KIP
KB KNEE BRACE

L

L LONG
LL LIVE LOAD
LLH LONG LEG HORIZONTAL
LLO LONG LEG OUT
LLV LONG LEG VERTICAL
LOC LOCATION
LPT LOW POINT
LSH LONG SLOTTED HOLE, LONG SIDE HORIZ
LSL LAMINATED STRANDED LUMBER
LSV LONG SIDE VERTICAL
LT LIGHT
LVL LAMINATED VENEER LUMBER

M

MAS MASONRY
MAX MAXIMUM
MC MECHANICAL CONTRACTOR
MECH MECHANICAL
MEZZ MEZZANINE
MFR MANUFACTURER
MID MIDDLE
MIN MINIMUM
MISC MISCELLANEOUS
MO MASONRY OPENING
MS MIDDLE STRIP
MTL METAL

N

(N) NEW
NA NOT APPLICABLE
NF NEAR FACE
NIC NOT IN CONTRACT
NS NEAR SIDE
NTS NOT TO SCALE

O

O/O OUT-TO-OUT
OA OVER ALL
OC ON CENTER
OCBF ORDINARY CONCENTRICALLY BRACED FRAME
OD OUTSIDE DIAMETER
OF OUTSIDE FACE
OMF ORDINARY MOMENT FRAME
OPH OPPOSITE HAND
OPNG OPENING
OPP OPPOSITE

P

PAF POWDER ACCUATED FASTENER
PC PIER CAP, PILE CAP
PCC PRECAST CONCRETE
PL PLATE
PLBG PLUMBING
PLYWD PLYWOOD
PREFAB PREFABRICATED
PSF PER SQUARE FOOT
PSI PER SQUARE INCH
PSL PARALLEL STRANDED LUMBER
PT POINT

Q

QTY QUANTITY

R

R RADIUS
RD ROOF DRAIN
REBAR REINFORCING STEEL BARS
REF REFERENCE, REFER TO
REINF REINFORCE
REQD REQUIRED
REQ'S REQUIREMENTS
REV REVISION
RO ROUGH OPENING
RST REINFORCING STEEL
RTU ROOF TOP UNIT

S

SC SLIP CRITICAL
SCBF SPECIAL CONCENTRICALLY BRACED FRAME
SCHED SCHEDULE
SF SQUARE FEET
SHT SHEET
SHTHG SHEATHING
SIM SIMILAR
SLO SHORT LEG OUT
SM SHEET METAL
SMF SPECIAL MOMENT FRAME
SOG SLAB ON GRADE
SPA SPACE
SPCL SPECIAL
SPEC SPECIFICATIONS
SQ SQUARE
SST STAINLESS STEEL
STD STANDARD
STIF STIFFENER
STL STEEL
STRUCT STRUCTURAL
SW SHEAR WALL
SYMM SYMMETRICAL

T

T TREAD, THICK
T&B TOP AND BOTTOM
TB TIE BEAM
TBR TO BE REMOVED
TO_ TOP OF
TOC TOP OF CONCRETE, OR CURB
TOF TOP OF FTG
TOM TOP OF MASONRY
TOP TOP OF PIER, PILASTER, OR PARAPET
TOS TOP OF STEEL
TOW TOP OF WALL
TPC TOP OF PIER OR PILE CAP
TEMP TEMPORARY
THK THICKNESS
THRU THROUGH
TMPD TEMPERED
TOM TOP OF MASONRY
TRTD TREATED
TYP TYPICAL

U

UNO UNLESS NOTED OTHERWISE

V

VAR VARIES
VB VERTICAL BRACE
VERT VERTICAL(LY)
VIF VERIFY IN FIELD

W

W WIDE, WIDTH
W/(O) WITH(OUT)
WBL WOOD BLOCKING
WD WOOD
WF WIDE FLANGE
WF BM WIDE FLANGE BEAM
WT WEIGHT
WDW WINDOW
WP WORKING POINT
WS WATER SEAL, WATER STOP
WWR WELDED WIRE REINFORCING

X

XBRA X CROSS BRACING

FULLY SPRINKLERED

CONSTRUCTION DOCUMENTS

No.	Date	Revisions

CONSULTANTS:

MECHANICAL/ELECTRICAL:
KJWW ENGINEERING CONSULTANTS - ST. LOUIS
#15 SUNNEN DRIVE, SUITE 104
ST. LOUIS, MO 63141

PLUMBING:
303RD ENGINEERING GROUP, LLC
1935 ARSENAL STREET
ST. LOUIS, MO 63118

ESTIMATING:
KWAME BUILDING GROUP
1204 WASHINGTON AVE. SUITE 200
ST. LOUIS, MO 63103

LIFE SAFETY/FIRE PROTECTION:
CODE CONSULTANTS, INC.
2043 WOODLAND PARKWAY, SUITE 300
ST. LOUIS, MO 63146

ACOUSTICAL ENGINEERS:
ACOUSTICONTROL LLC
1709 WASHINGTON AVENUE, LOFT 300
ST. LOUIS, MO 63103

COMMISSIONING:
ZODIAC INTERNATIONAL
16100 CHESTERFIELD PARKWAY, SUITE 365
CHESTERFIELD, MO 63017

ENVIRONMENTAL:
EVIRONMENTAL CONSULTANTS, LLC
#6 MEADOW HEIGHTS PROFESSIONAL PARK DR.
COLLINSVILLE, IL
62234

STRUCTURAL ENGINEER
kpff Consulting Engineers
1630 Des Peres Road, Suite 100
Saint Louis, MO 63131
(314) 835-0524 Fax (314) 835-0749
Mo. Certificate of Authority No. 2001010829

THIS MEDIA SHOULD NOT BE CONSIDERED A CERTIFIED DOCUMENT

ARCHITECT/ENGINEERS:

CHRISTNER
ARCHITECTS | DESIGNERS | PLANNERS | LANDSCAPE ARCHITECTS
168 N MERAMEC, SUITE 400 | ST. LOUIS, MISSOURI 63105
TEL 314 725 2927 | FAX 314 725 2928 | CHRISTNERINC.COM

The Professional Engineer whose personal seal and signature Appears on this page assumes responsibility only for what appears on this page and disclaims (pursuant to Section 327.411 RSMo) any responsibility for all other pages, plans, specifications, estimates, reports, or other documents or instruments not sealed by this Professional Engineer relating to, or intended to be used for, any part or parts of the engineering project to which this page refers.

Drawing Title: GENERAL NOTES

DIRECTOR OF SPECIALTY CARE | INFECTION CONTROL PRACTITIONER | CHIEF ENGINEER | ASSISTANT DIRECTOR | ASSOCIATE DIRECTOR OF PATIENT SERVICES | CHIEF OF STAFF | ASSOCIATE DIRECTOR | MEDICAL CENTER DIRECTOR

Project Title: INTENSIVE CARE UNIT

Location: HARRY S. TRUMAN VAMC

Date	Checked	Drawn	Approved
12/30/13	SRH	TJR	LDS

Project Number: 110348.01

Building Number: #1

Drawing Number: SS 001

Dwg. 63 of 201

Office of Construction and Facilities Management

Department of Veterans Affairs

VA FORM 08-6231 PRINTED ON ORIGINAL SIZE OF SHEET IS 30" X 42"

STATEMENT OF STRUCTURAL SPECIAL INSPECTIONS

GENERAL
The Owner will engage and employ a qualified special inspection agency or agencies to conduct special inspections of structural work as required by chapter 17 of the 2009 International Building Code and as delineated below. Agencies that are considered qualified and acceptable to act as special inspectors will be those acceptable to the building official of the jurisdiction that grants the building permit and the owner.

SPECIAL INSPECTION REPORT REQUIREMENTS
Special Inspectors shall keep records of inspections. The special inspector shall furnish inspection reports to the Building Official, Owner, Architect, Structural Engineer, and Contractor. Reports shall indicate that the structural work inspected was done in conformance to approved Contract Documents. Discrepancies shall be brought to the immediate attention of the Contractor for correction. If the discrepancies are not corrected, the discrepancies shall be brought to the attention of the Building Official, Owner, Architect, and Structural Engineer prior to the completion of that phase of work. A final report of inspections documenting required special inspections of structural work and correction of any discrepancies noted in the inspections shall be submitted at a point in time agreed upon by the Owner and the Building Official prior to the start of work.

REQUIRED SPECIAL INSPECTIONS
The following types of structural work require special inspections. Refer to individual Specification Sections for specific testing and inspecting requirements. Continuous inspection is the full-time observation of work by a qualified special inspector who is present in the area where the work is being performed. Periodic special inspection is the part-time or intermittent observation of work by a qualified special inspector who is present in the area where the work has been or is being performed and at the completion of the work.

CONCRETE CONSTRUCTION

SPECIAL INSPECTION ITEM	TYPE OF INSPECTION		REMARKS
	CONTINUOUS	PERIODIC	
1. Inspection of steel reinforcement, including size, quantity and placement.		X	
2. Inspection of anchor rods, headed bolts, headed studs, shear stud shear reinforcing and other embedded items prior to and during placement of concrete.	X		
3. Inspection of anchors installed in hardened concrete.			See "Post Installed Anchors" table
4. Verification of use of required design mixture.		X	
5. Testing of slump, air content, and temperature of concrete at the time fresh concrete is sampled to fabricate specimens for strength tests.	X		Frequency of test per specifications.
6. Inspection of concrete placement, including conveying and depositing.	X		
7. Inspection of curing procedures and maintenance of curing temperatures.		X	
8. Verification of concrete strength before removal of shores and forms from beams and slabs.		X	
9. Verification that approved shop drawings are being used on site.		X	

STEEL CONSTRUCTION

SPECIAL INSPECTION ITEM	TYPE OF INSPECTION		REMARKS
	CONTINUOUS	PERIODIC	
1. Material verification of high-strength bolts, nuts, and washers:			
a. Identification markings to conform to ASTM standards specified in the approved construction documents.		X	
b. Manufacturer's certificate of compliance required.		X	
2. Inspection of high-strength bolting:			
a. Snug-tight joints.		X	
b. Pretensioned and slip-critical joints using turn-of-nut with matchmarking, twist-off bolt or direct tension indicator methods of installation.		X	
c. Pretensioned and slip-critical joints using turn-of-nut without matchmarking or calibrated wrench methods of installation.	X		
3. Material verification of structural steel and cold-formed steel deck:			
a. For structural steel, identification markings to conform to AISC 360.		X	
b. For other steel, identification markings to conform to ASTM standards specified in the approved construction documents.		X	
c. Manufacturer's certified test reports.		X	
4. Material verification of weld filler materials:			
a. Identification markings to conform to AWS specification in the approved construction documents.		X	
b. Manufacturer's certificate of compliance required.		X	
5. Inspection of structural steel and cold-formed steel deck welding:			
a. Complete and partial joint penetration groove welds.	X		
b. Multi-pass fillet welds.	X		
c. Single-pass fillet welds greater than 5/16 inches thick.	X		
d. Plug and slot welds.	X		
e. Single-pass fillet welds less than or equal to 5/16 inches		X	
f. Floor and roof deck welds and side lap fasteners.		X	
6. Inspection of steel frame joint details for compliance with details such as bracing and stiffening, member locations, and application of joint details at each connection.		X	
7. Verification that approved shop drawings are being used on site.		X	

STRUCTURAL LIGHT GAGE STUD CONSTRUCTION

SPECIAL INSPECTION ITEM	TYPE OF INSPECTION		REMARKS
	CONTINUOUS	PERIODIC	
1. Material verification of studs and weld electrodes.		X	
2. Inspection of light gage welds to structure.		X	
3. Inspection of welding operations of elements of wind and seismic force resisting systems.		X	
4. Inspection of screw attachment, bolting, anchoring and other fastening of components within wind and seismic force resisting systems, including shear walls, braces, diaphragms, collectors (drag struts) and hold-downs.		X	

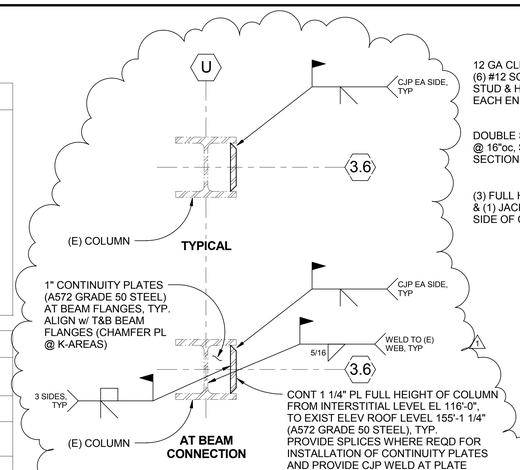

3 SS 002 DETAIL
3/4" = 1'-0"

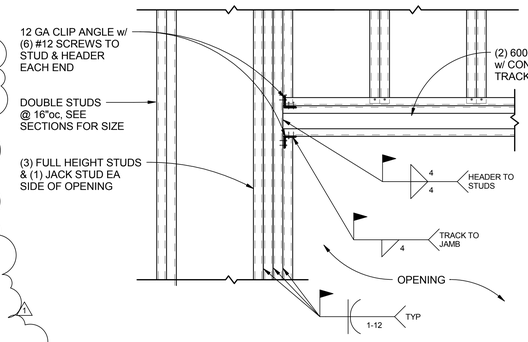

2 SS 002 TYPICAL LIGHT GAUGE METAL STUD WALL OPENING DETAIL
3/4" = 1'-0"

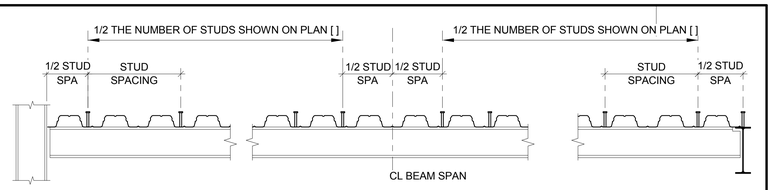

TYPICAL STUD LAYOUT PATTERN

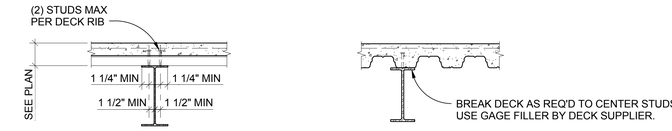

PERPENDICULAR TO DECK

PARALLEL WITH DECK

NOTE: MINIMUM DIMENSIONS APPLY TO BOTH PERPENDICULAR AND PARALLEL CONDITIONS.

NOTES:
1. Number in brackets after beam designation [XX] indicates the number of end welded studs equally spaced on top flange of beam. Composite beam is designed unshored, unless noted otherwise in plan.
2. Weld deck at each support with (3) 5/8" puddle welds per sheet. Stud welding through decking can be considered as one puddle weld. Do NOT prime top flange of steel beams. Side laps to be crimped or screwed at 36"oc Max.
3. Place studs in deck valleys. Use two rows of studs if required.
4. Minimum spacing for studs is 4 1/2"oc; maximum spacing is 3'-0" oc. Provide 2 rows of studs if minimum spacing cannot be met.
5. For W 10x12, W 12x14, and W 12x16 beams, studs shall be welded directly over the beam web.

1 SS 002 TYPICAL COMPOSITE BEAM HEADED STUD DETAILS
N.T.S.

EXIST CONC COL SPLICE BAR SCHED		
GRID	(E) CON COL SIZE	(E) COL SPLICE REBAR w/ MECH COUPLER
U-5.1	20" x 20"	(8) #10
U-6.3	20" x 20"	(4) #9
U-7.6	20" x 20"	(4) #11
U-8.9	20" x 20"	(8) #10
U-10.2	20" x 20"	(8) #10
W-6.3	24" x 24"	(4) #9
W-7.6	24" x 24"	(4) #9
W-8.9	24" x 24"	(8) #9
W-10.2	20" x 20"	(12) #10
W.4-3.6	16" x 16"	(4) #8
Y-4.1	20" x 20"	(4) #10
Y-5.1	20" x 20"	(4) #9
Y-6.3	20" x 20"	(4) #9
Y-7.6	20" x 20"	(4) #9
Y-8.9	20" x 20"	(4) #9
Y-10.2	20" x 20"	(12) #10

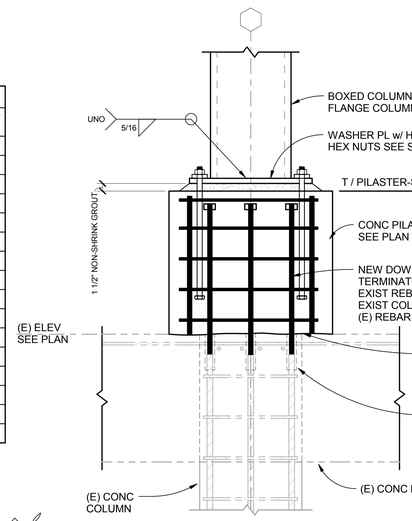

DETAIL A: TYPICAL COLUMN AT BASE PLATE DETAIL USING ALL EXISTING COUPLERS

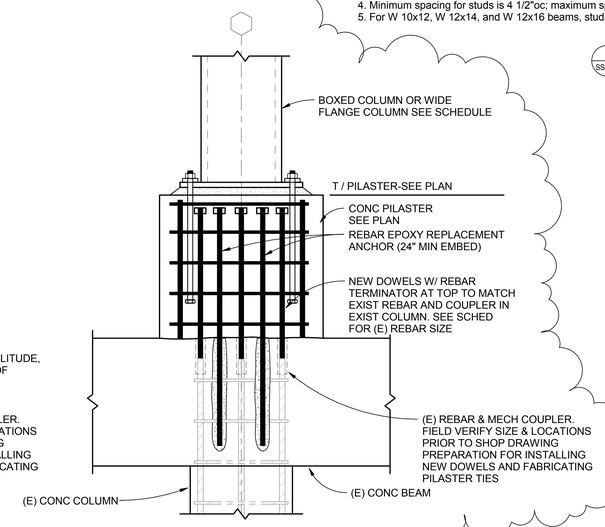

NOTE: SEE DETAIL A FOR BALANCE OF INFO

DETAIL B: REPAIR DETAILS FOR REPLACEMENT REBAR EPOXY ANCHORS DUE TO UNUSABLE COUPLERS (SEE NOTE 6).

4 SS 002 TYPICAL COLUMN BASE PLATE DETAIL AT EXIST O.R. ROOF
N.T.S

NOTES:
1. FIELD VERIFY EXISTING CONCRETE COLUMN SIZE, LOCATIONS OF EXISTING BEAM AND COLUMN REINFORCING, AND LOCATIONS OF EXISTING MECHANICAL COUPLERS PRIOR TO SHOP DRAWING PREPERATION FOR INSTALLING NEW MATCHING DOWELS, AND FABRICATING PILASTER TIES.
2. CONTRACTOR TO PERFORM X-RAY OR OTHER NON-DESTRUCTIVE TESTING TO FIELD VERIFY LOCATIONS OF ALL EXISTING REINFORCING AT TOP OF BEAMS AND COLUMNS PRIOR TO DRILLING EPOXY ANCHORS AS REQUIRED. CUTTING OF REINFORCING IN EXISTING BEAMS AND COLUMNS IS NOT PERMITTED.
3. FOLLOWING NON-DESTRUCTIVE TESTING OF NOTE NO. 2 ABOVE, CONTRACTOR TO PERFORM DETAILED EXPLORATORY INVESTIGATION TO ACCURATELY LOCATE ALL EXISTING MECHANICAL COUPLERS. DO NOT CUT OR DAMAGE EXISTING REINFORCING DURING EXPLORATION.
4. PROVIDE REPORT WITH FIELD VERIFIED ACCURATE LOCATIONS OF COUPLERS PRIOR TO SHOP DRAWING PREPERATION FOR FABRICATION OF PILASTER REINFORCING, PILASTER TIES & FABRICATION OF COLUMN BASE PLATES FOR ENGINEER REVIEW. AWAIT ENGINEER REVIEW PRIOR TO PROCEEDING TO No. 5.
5. FABRICATE PILASTER TIES & BASE PLATES ONLY AFTER FIELD VERIFYING PLAN LOCATIONS AND ELEVATIONS OF ALL EXISTING MECHANICAL COUPLERS.
6. NOTE THAT ALL EXISTING MECHANICAL COUPLERS AT THE TOP OF EXISTING CONCRETE COLUMNS MAY NOT BE USABLE FOR INSTALLING NEW REBAR DOWELS DUE TO INTERFERENCE WITH EXISTING TOP REINF OF BEAMS IN EACH DIRECTION. ANY UNUSABLE COUPLERS WILL REQUIRE REPAIR BY CORING OR DRILLING & EPXOY GROUTING OF ANCHORS SIMILAR TO REPAIR DETAILS SHOWN ABOVE. FOR BIDDING PURPOSES, PROVIDE THE FOLLOWING:
   A. ASSUME 50% OF ALL EXISTING MECHANICAL COUPLERS UNUSABLE FOR INSTALLATION OF NEW REBAR DOWELS SHOWN TYPICALLY ABOVE IN DETAIL A AND PROVIDE COST FOR REPAIRS OF UNUSABLE COUPLERS PER DETAIL B. ALSO, PROVIDE UNIT COST FOR EACH UNUSABLE COUPLER FOR ADJUSTMENTS ON NET VARIATION OF TOTAL REPLACEMENT QUANTITIES.
   B. DEPENDING ON THE NUMBER OF UNUSABLE COUPLERS WHICH EXIST, LOCATIONS OF THE EXISTING COUPLERS AND THE LOCATIONS OF ALL BEAM AND COLUMN REINF BASED ON FIELD VERIFICATION NOTES ABOVE, THE STRUCTURAL ENGINEER WILL PERFOM STRUCTURAL EVALUATION AT EACH COLUMN LOCATION. BASED UPON EVALUATION AT EACH COLUMN, STRUCTURAL ENGINEER WILL PROVIDE REPAIR DETAILS, WHICH WILL INLCUDE THE NUMBER, SIZE AND LOCATIONS OF EPOXY REPLACEMENT ANCHORS AND IF REQUIRED, SIZE MODIFICATIONS TO PILASTER AND REVISIONS TO BASE PLATE SIZE AND COLUMN ANCHOR LOCATIONS. INCLUDE AN ADDITION FEE OF $20,000 IN THE BID FOR FUTURE STRUCTURAL EVALUATION AND REPAIR DETAILS.
   C. IN ADDITION TO COSTS IN THE BID FOR ITEMS IN NOTE No. 6 ABOVE, PROVIDE COSTS FOR ITEMS NOTED IN NOTES No.1 THROUGH 5 ABOVE.

ROUGH OPENING SIZE	ANGLE SIZE
UP TO 1'-0"	NONE
1'-1" TO 3'-4"	L 4 x 4 x 1/4
3'-5" TO 4'-8"	L 4 x 4 x 5/16
4'-9" TO 6'-8"	L 6 x 4 x 5/16
6'-9" TO 9'-4"	L 6 x 4 x 3/8
ALL ANGLES MUST HAVE 8" OF BEARING AT EACH END. ALL ANGLES ORIENTED LONG LEG VERTICAL.	

7 SS 002 LINTEL SCHEDULE
N.T.S

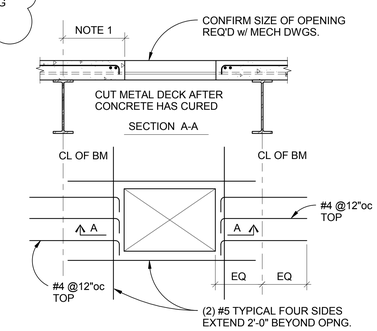

NOTE 1
#4 HOOKED BARS ARE REQUIRED ONLY WHEN THE DISTANCE FROM THE EDGE OF THE OPENING TO THE CENTERLINE OF THE BEAM EXCEEDS 17".

5 SS 002 TYPICAL OPENING IN COMPOSITE SLAB DETAIL
N.T.S

POST INSTALLED ANCHORS TO CONCRETE AND MASONRY

SPECIAL INSPECTION ITEM	TYPE OF INSPECTION		REMARKS
	CONTINUOUS	PERIODIC	
1. Use of proper anchor system and manufacturer.		X	
2. Review of installer's qualifications including certification by anchor manufacturer.		X	* See Note 1
3. Anchor installation process as noted in general notes.			* See Note 2
4. Verification of supporting material's condition.		X	
5. Proof testing as outlined in general notes.		X	

* Remark Notes:
1. Inspector shall be familiar with anchor manufacturer's written installation procedure and ESR report.
2. Refer to manufacturer's ESR for type of inspection periodic vs. continuous.

FULLY SPRINKLERED
CONSTRUCTION DOCUMENTS

No.	Date	Revisions
1	1/14/15	Amendment #4

CONSULTANTS:

MECHANICAL/ELECTRICAL:
KJWW ENGINEERING CONSULTANTS - ST. LOUIS
#15 SUNNEN DRIVE, SUITE 104
ST. LOUIS, MO 63141

PLUMBING:
303RD ENGINEERING GROUP, LLC
1935 ARSENAL STREET
ST. LOUIS, MO 63118

ESTIMATING:
KWAME BUILDING GROUP
1204 WASHINGTON AVE. SUITE 200
ST. LOUIS, MO 63103

LIFE SAFETY/FIRE PROTECTION:
CODE CONSULTANTS, INC.
2043 WOODLAND PARKWAY, SUITE 300
ST. LOUIS, MO 63146

ACOUSTICAL ENGINEERS:
ACOUSTICONTROL LLC
1709 WASHINGTON AVENUE, LOFT 300
ST. LOUIS, MO 63103

COMMISSIONING:
ZODIAC INTERNATIONAL
16100 CHESTERFIELD PARKWAY, SUITE 365
CHESTERFIELD, MO 63017

ENVIROMENTAL:
EVIRONMENTAL CONSULTANTS, LLC
#6 MEADOW HEIGHTS PROFESSIONAL PARK DR.
COLLINSVILLE, IL
62234

STRUCTURAL ENGINEER
kpff Consulting Engineers
1630 Des Peres Road, Suite 100
Saint Louis, MO 63131
(314) 835-0524 Fax (314) 835-0749
Mo. Certificate of Authority No. 2001010829

THIS MEDIA SHOULD NOT BE CONSIDERED A CERTIFIED DOCUMENT

ARCHITECT/ENGINEERS:

CHRISTNER
ARCHITECTS | DESIGNERS | PLANNERS | LANDSCAPE ARCHITECTS
168 N MERAMEC, SUITE 400 | ST. LOUIS, MISSOURI 63105
TEL 314 725 2927 | FAX 314 725 2928 | CHRISTNERINC.COM

The Professional Engineer whose personal seal and signature Appears on this page assumes responsibility only for what appears on this page and disclaims (pursuant to Section 327.411 RSMo) any responsibility for all other pages, plans, specifications, estimates, reports, or other documents or instruments not sealed by this Professional Engineer relating to, or intended to be used for, any part or parts of the engineering project to which this page refers.

DIRECTOR OF SPECIALTY CARE	INFECTION CONTROL PRACTITIONER	CHIEF ENGINEER	ASSISTANT DIRECTOR	ASSOCIATE DIRECTOR OF PATIENT SERVICES	CHIEF OF STAFF	ASSOCIATE DIRECTOR	MEDICAL CENTER DIRECTOR

Drawing Title: TYPICAL DETAILS

Project Title: INTENSIVE CARE UNIT

Project Number: 110348.01

Building Number: #1

Location: HARRY S. TRUMAN VAMC

Date	Checked	Drawn	Approved
12/30/13	SRH	TJR	LDS

Drawing Number: SS 002

Dwg. 64 of 201

Office of Construction and Facilities Management

Department of Veterans Affairs

VA FORM 08-6231 PRINTED ON ORIGINAL SIZE OF SHEET IS 30" X 42"

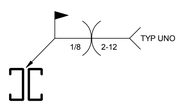

CONDITION 1

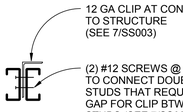

CONDITION 2

5 / SS 003 TYPICAL DOUBLE STUDS CONNECTION
N.T.S

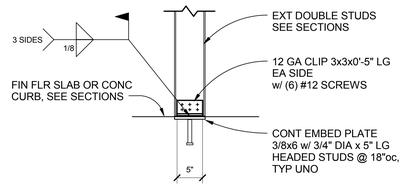

4 / SS 003 TYPICAL EXTERIOR DOUBLE STUDS TO FLOOR SLAB OR CONC CURB CONNECTION
N.T.S

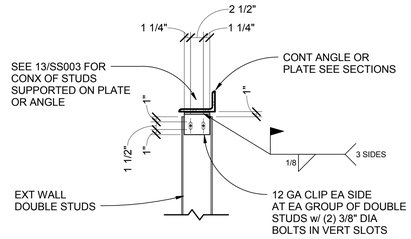

3 / SS 003 TYPICAL EXTERIOR DOUBLE STUDS TO ANGLE/PLATE VERTICAL SLIP CONNECTION AT TOP
N.T.S

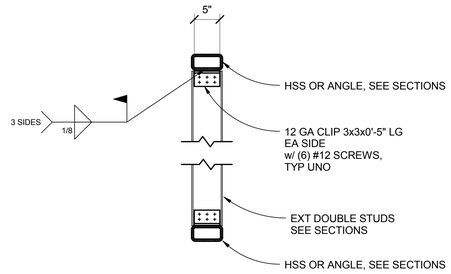

2 / SS 003 TYPICAL EXTERIOR WALL STUDS TO HSS OR ANGLE CONNECTION
N.T.S

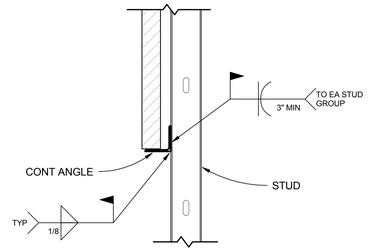

1 / SS 003 TYPICAL SHELF ANGLE TO STUD ATTACHMENT DETAIL
N.T.S

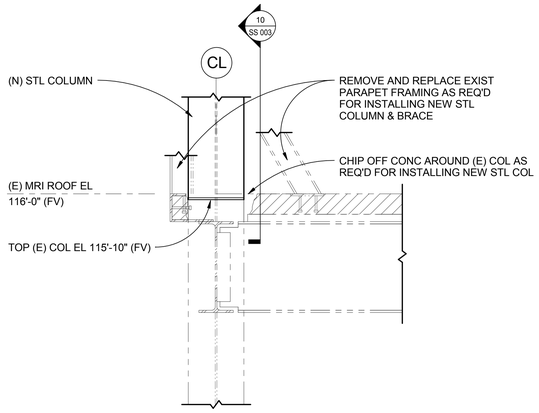

NOTE: TOP OF (E) COL IS LEVEL CUT FOR (F) VERTICAL EXPANSION COL WELDS / CONX. CONTR TO FIELD VERIFY TOP CONDITION AND PREP AS REQ'D FOR COL SPLICE PRIOR TO FABRICATING STEEL COLUMNS.

9 / SS 003 TYPICAL EXTERIOR COLUMN BASE DETAIL AT EXIST MRI ROOF
3/4" = 1'-0"

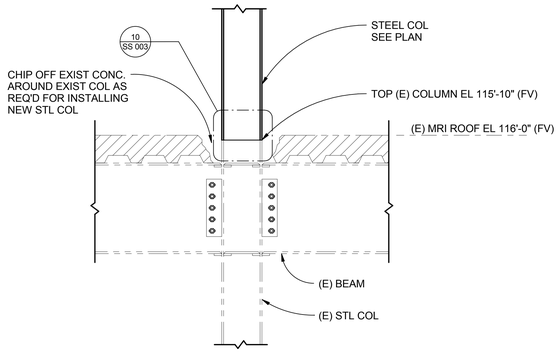

NOTE: TOP OF (E) COL IS LEVEL CUT FOR (F) VERTICAL EXPANSION COL WELDS / CONX. CONTR TO FIELD VERIFY TOP CONDITION AND PREP AS REQ'D FOR COL SPLICE PRIOR TO FABRICATING STEEL COLUMNS.

8 / SS 003 TYPICAL INTERIOR COLUMN BASE DETAIL AT EXIST MRI ROOF
3/4" = 1'-0"

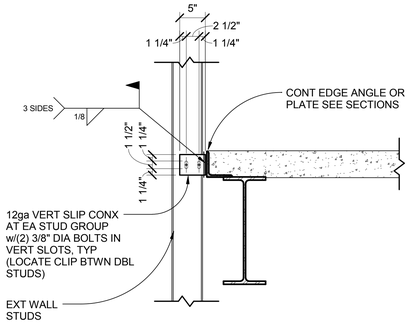

7 / SS 003 TYPICAL VERTICAL SLIDE CONX STUD TO SLAB EDGE
N.T.S

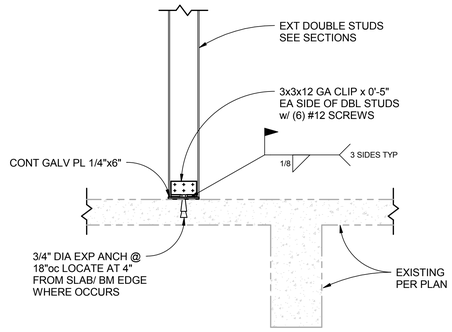

6 / SS 003 TYPICAL DOUBLE STUDS CONNECTION AT EXIST O.R. ROOF SLAB
N.T.S

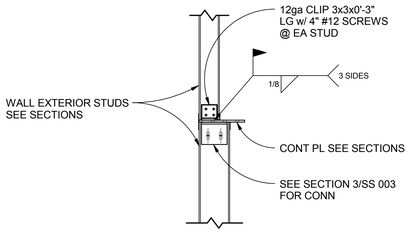

13 / SS 003 TYPICAL EXTERIOR STUD TO PLATE/ ANGLE CONNECTIONAT BOTTOM
1" = 1'-0"

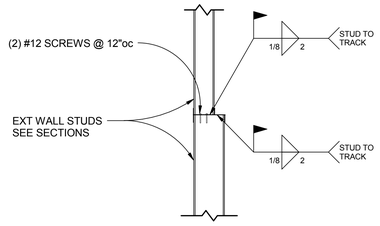

12 / SS 003 TYP EXTERIOR 4" SUTD TO 6" STUD CONNECTION DETAIL
1" = 1'-0"

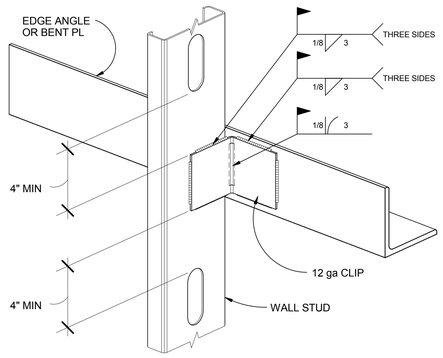

11 / SS 003 TYPICAL LIGHT GAUGE STUD CLIP ATTACHMENT DETAIL
N.T.S

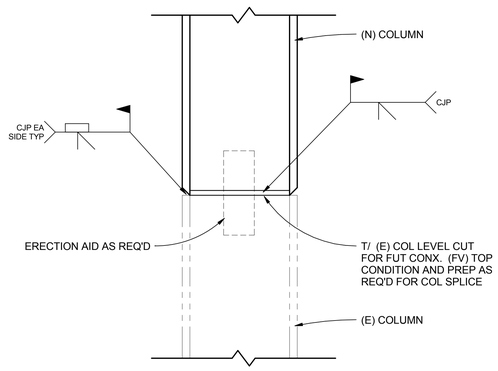

10 / SS 003 COLUMN SPLICE
1 1/2" = 1'-0"

FULLY SPRINKLERED
CONSTRUCTION DOCUMENTS

No.	Date	Revisions

CONSULTANTS:

MECHANICAL/ELECTRICAL:
KJWW ENGINEERING CONSULTANTS - ST. LOUIS
#15 SUNNEN DRIVE, SUITE 104
ST. LOUIS, MO 63141

PLUMBING:
303RD ENGINEERING GROUP, LLC
1935 ARSENAL STREET
ST. LOUIS, MO 63118

ESTIMATING:
KWAME BUILDING GROUP
1204 WASHINGTON AVE. SUITE 200
ST. LOUIS, MO 63103

LIFE SAFETY/FIRE PROTECTION:
CODE CONSULTANTS, INC.
2043 WOODLAND PARKWAY, SUITE 300
ST. LOUIS, MO 63146

ACOUSTICAL ENGINEERS:
ACOUSTICONTROL LLC
1709 WASHINGTON AVENUE, LOFT 300
ST. LOUIS, MO 63103

COMMISSIONING:
ZODIAC INTERNATIONAL
16100 CHESTERFIELD PARKWAY, SUITE 365
CHESTERFIELD, MO 63017

ENVIROMENTAL:
EVIRONMENTAL CONSULTANTS, LLC
#6 MEADOW HEIGHTS PROFESSIONAL PARK DR.
COLLINSVILLE, IL
62234

STRUCTURAL ENGINEER
kpff Consulting Engineers
1630 Des Peres Road, Suite 100
Saint Louis, MO 63131
(314) 835-0524 Fax (314) 835-0749
Mo. Certificate of Authority No. 2001010829

THIS MEDIA SHOULD NOT BE CONSIDERED A CERTIFIED DOCUMENT

ARCHITECT/ENGINEERS:

CHRISTNER
ARCHITECTS | DESIGNERS | PLANNERS | LANDSCAPE ARCHITECTS
168 N MERAMEC, SUITE 400 | ST. LOUIS, MISSOURI 63105
TEL 314 725 2927 | FAX 314 725 2928 | CHRISTNERINC.COM

The Professional Engineer whose personal seal and signature Appears on this page assumes responsibility only for what appears on this page and disclaims (pursuant to Section 327.411 RSMo) any responsibility for all other pages, plans, specifications, estimates, reports, or other documents or instruments not sealed by this Professional Engineer relating to, or intended to be used for, any part or parts of the engineering project to which this page refers.

DIRECTOR OF SPECIALTY CARE	INFECTION CONTROL PRACTITIONER	CHIEF ENGINEER	ASSISTANT DIRECTOR	ASSOCIATE DIRECTOR OF PATIENT SERVICES	CHIEF OF STAFF	ASSOCIATE DIRECTOR	MEDICAL CENTER DIRECTOR

Drawing Title: TYPICAL DETAILS

Project Title: INTENSIVE CARE UNIT

Location: HARRY S. TRUMAN VAMC

Date	Checked	Drawn	Approved
12/30/13	SRH	TJR	LDS

Project Number: 110348.01
Building Number: #1
Drawing Number: SS 003
Dwg. 65 of 201

Office of Construction and Facilities Management
Department of Veterans Affairs

VA FORM 08-6231 PRINTED ON ORIGINAL SIZE OF SHEET IS 30" X 42"

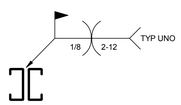

CONDITION 1

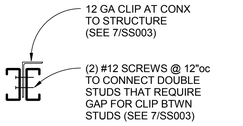

CONDITION 2

5 / SS 003.# TYPICAL DOUBLE STUDS CONNECTION
N.T.S

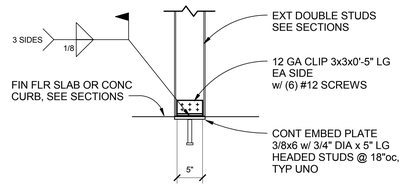

4 / SS 003.# TYPICAL EXTERIOR DOUBLE STUDS TO FLOOR SLAB OR CONC CURB CONNECTION
N.T.S

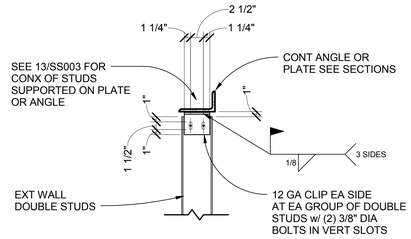

3 / SS 003.# TYPICAL EXTERIOR DOUBLE STUDS TO ANGLE/PLATE VERTICAL SLIP CONNECTION AT TOP
N.T.S

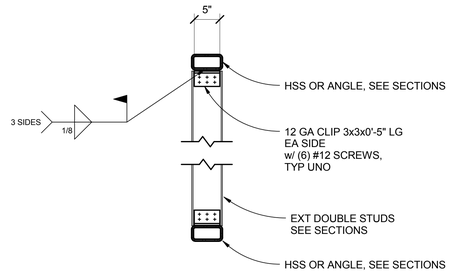

2 / SS 003.# TYPICAL EXTERIOR WALL STUDS TO HSS OR ANGLE CONNECTION
N.T.S

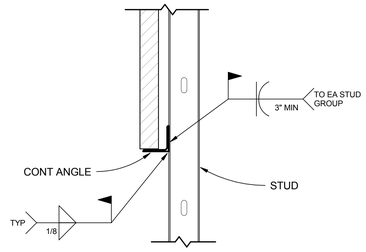

1 / SS 003.# TYPICAL SHELF ANGLE TO STUD ATTACHMENT DETAIL
N.T.S

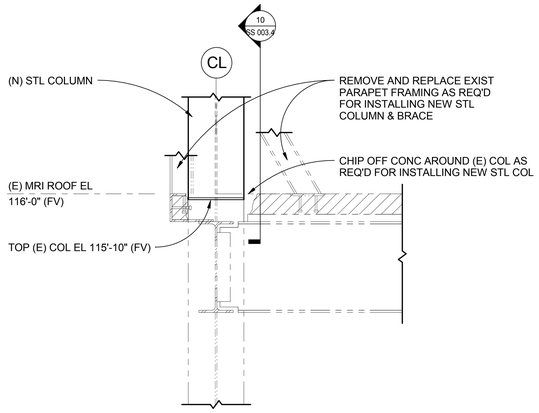

NOTE: TOP OF (E) COL IS LEVEL CUT FOR (F) VERTICAL EXPANSION COL WELDS / CONX. CONTR TO FIELD VERIFY TOP CONDITION AND PREP AS REQ'D FOR COL SPLICE PRIOR TO FABRICATING STEEL COLUMNS.

9 / SS 003.# TYPICAL EXTERIOR COLUMN BASE DETAIL AT EXIST MRI ROOF
3/4" = 1'-0"

NOT USED

8 / SS 003.# NOT USED
3/4" = 1'-0"

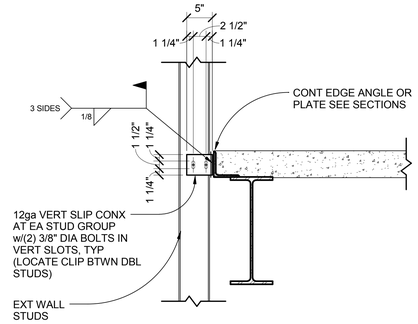

7 / SS 003.# TYPICAL VERTICAL SLIDE CONX STUD TO SLAB EDGE
N.T.S

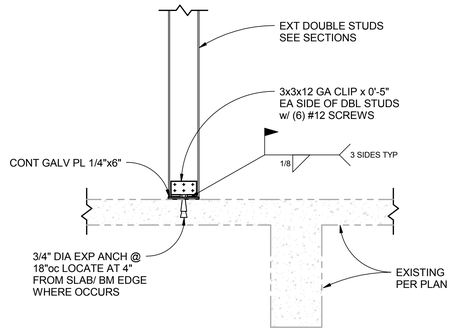

6 / SS 003.# TYPICAL DOUBLE STUDS CONNECTION AT EXIST O.R. ROOF SLAB
N.T.S

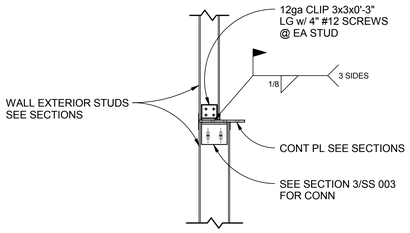

13 / SS 003.# TYPICAL EXTERIOR STUD TO PLATE/ ANGLE CONNECTIONAT BOTTOM
1" = 1'-0"

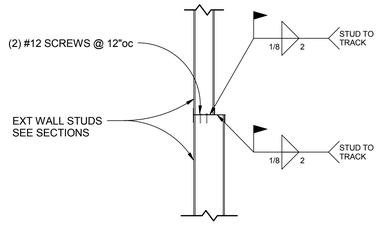

12 / SS 003.# TYP EXTERIOR 4" SUTD TO 6" STUD CONNECTION DETAIL
1" = 1'-0"

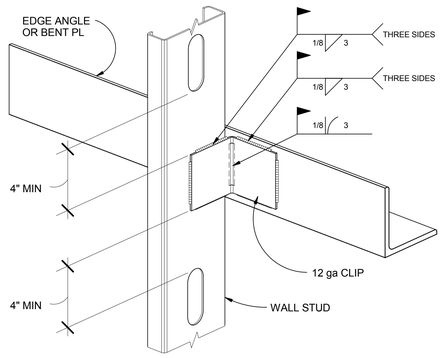

11 / SS 003.# TYPICAL LIGHT GAUGE STUD CLIP ATTACHMENT DETAIL
N.T.S

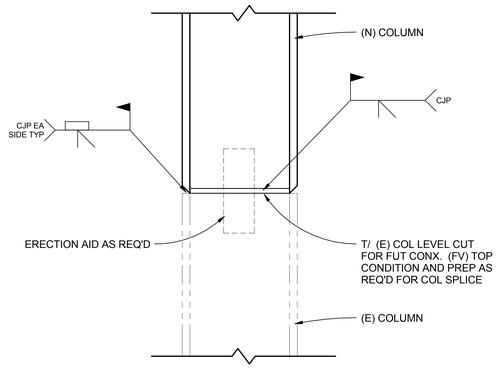

10 / SS 003.# COLUMN SPLICE
1 1/2" = 1'-0"

FULLY SPRINKLERED
CONSTRUCTION DOCUMENTS

No.	Date	Revisions

CONSULTANTS:

MECHANICAL/ELECTRICAL:
KJWW ENGINEERING CONSULTANTS - ST. LOUIS
#15 SUNNEN DRIVE, SUITE 104
ST. LOUIS, MO 63141

PLUMBING:
303RD ENGINEERING GROUP, LLC
1935 ARSENAL STREET
ST. LOUIS, MO 63118

ESTIMATING:
KWAME BUILDING GROUP
1204 WASHINGTON AVE. SUITE 200
ST. LOUIS, MO 63103

LIFE SAFETY/FIRE PROTECTION:
CODE CONSULTANTS, INC.
2043 WOODLAND PARKWAY, SUITE 300
ST. LOUIS, MO 63146

ACOUSTICAL ENGINEERS:
ACOUSTICONTROL LLC
1709 WASHINGTON AVENUE, LOFT 300
ST. LOUIS, MO 63103

COMMISSIONING:
ZODIAC INTERNATIONAL
16100 CHESTERFIELD PARKWAY, SUITE 365
CHESTERFIELD, MO 63017

ENVIROMENTAL:
EVIRONMENTAL CONSULTANTS, LLC
#6 MEADOW HEIGHTS PROFESSIONAL PARK DR.
COLLINSVILLE, IL
62234

STRUCTURAL ENGINEER
kpff Consulting Engineers
1630 Des Peres Road, Suite 100
Saint Louis, MO 63131
(314) 835-0524 Fax (314) 835-0749
Mo. Certificate of Authority No. 2001010829

THIS MEDIA SHOULD NOT BE CONSIDERED A CERTIFIED DOCUMENT

ARCHITECT/ENGINEERS:

CHRISTNER
ARCHITECTS | DESIGNERS | PLANNERS | LANDSCAPE ARCHITECTS
168 N MERAMEC, SUITE 400 | ST. LOUIS, MISSOURI 63105
TEL 314 725 2927 | FAX 314 725 2928 | CHRISTNERINC.COM

The Professional Engineer whose personal seal and signature Appears on this page assumes responsibility only for what appears on this page and disclaims (pursuant to Section 327.411 RSMo) any responsibility for all other pages, plans, specifications, estimates, reports, or other documents or instruments not sealed by this Professional Engineer relating to, or intended to be used for, any part or parts of the engineering project to which this page refers.

DIRECTOR OF SPECIALTY CARE	INFECTION CONTROL PRACTITIONER	CHIEF ENGINEER	ASSISTANT DIRECTOR	ASSOCIATE DIRECTOR OF PATIENT SERVICES	CHIEF OF STAFF	ASSOCIATE DIRECTOR	MEDICAL CENTER DIRECTOR

Drawing Title: TYPICAL DETAILS DEDUCT ALTERNATES 4,5

Project Title: INTENSIVE CARE UNIT

Location: HARRY S. TRUMAN VAMC

Date	Checked	Drawn	Approved
9/4/14	SRH	TJR	LDS

Project Number: 110348.01
Building Number: #1
Drawing Number: SS 003.4
Dwg.104 of 296

Office of Construction and Facilities Management
Department of Veterans Affairs

VA FORM 08-6231 PRINTED ON ORIGINAL SIZE OF SHEET IS 30" X 42"

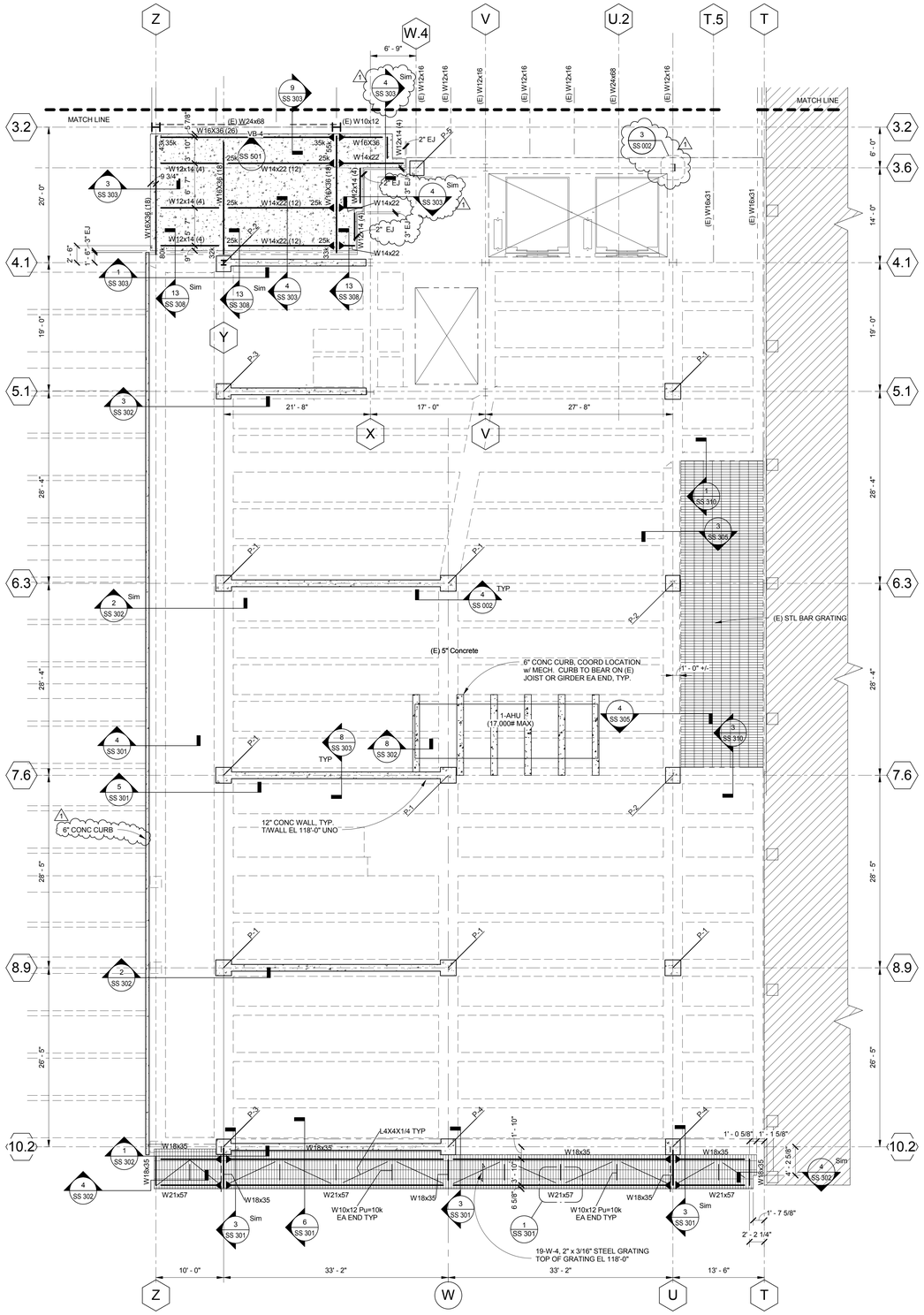

1 SS 101 INTERSTITIAL MECHANICAL LEVEL FLOOR PLAN - SOUTH
1/8" = 1'-0"

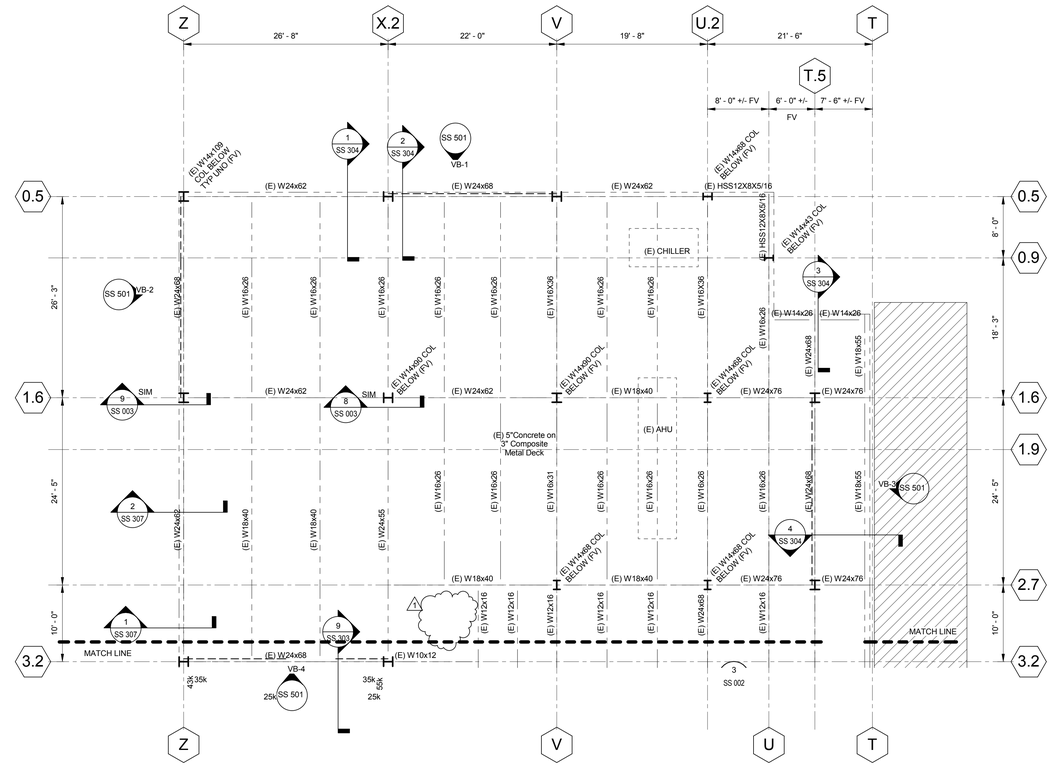

2 SS 101 INTERSTITIAL MECHANICAL LEVEL FLOOR PLAN - NORTH
1/8" = 1'-0"

CONCRETE PEDESTAL SCHEDULE		
MARK	SIZE	REF: DETAIL
P-1	28" x 28"	9/SS401
P-2	26" x 26"	12/SS401
P-3	26" x 27"	11/SS401
P-4	28" x 26"	10/SS401
P-5	25" x 26"	13/SS401

NOTES:
1. EXISTING O. R. ROOF SLAB ELEVATION = 116'-0". FIELD VERIFY.
2. COLUMNS ARE CENTERED ON GRID LINES, UNO.
3. SEE ARCHITECT DRAWINGS FOR DEMOLITION PLANS.
4. GENERAL NOTES AND TYPICAL DETAILS ARE ON SHEET SS 001 THRU SS 003.
5. TOP OF PILASTER = 118'-6" TYPICAL UNLESS NOTED OTHERWISE
6. ▶ INDICATES MOMENT RESISTANT CONNECTION, SEE DETAILS ON SHEET SS 402.
7. INDICATES NEW 3 1/4" LIGHT WEIGHT CONCRETE ON 2" x 20 ga GALV COMPOSITE METAL DECK (5 1/4" TOTAL THICKNESS) REINFORCE WITH 6x6-W2.9xW 2.9 WWR. COORDINATE LOCATION AND DIMENSIONS WITH ARCH.
8. REACTIONS SHOWN ON BEAMS ARE FACTORED SHEAR LOADS. BEAMS WITHOUT REACTIONS SHALL BE DESIGNED FOR 15k MIN FACTORED SHEAR LOAD.
   a.) CONNECTION DESIGN NOTATION:
   Vu = FACTORED VERTICAL SHEAR
   Pu = FACTORED AXIAL LOAD
   FORCES NOTED WITHOUT AN IDENTIFIER ARE Vu.
   b.) WHERE MULTIPLE FORCES ARE SHOWN, CONNECTION SHALL BE DESIGNED ASSUMING FORCES ACT SIMULTANEOUSLY.
9. REMOVE AND REPLACE EXISTING PARAPET FRAMING AS REQUIRED FOR INSTALLATION OF NEW VERTICAL BRACE. SEE ARCHITECTURAL DRAWINGS.

THE DIMENSIONS AND ELEVATIONS SHOWN FOR THE EXISTING CONSTRUCTION ARE ***NOT*** AS-BUILT DIMENSIONS BUT WERE OBTAINED FROM OTHER DRAWINGS AND DOCUMENTS. IT IS THE RESPONSIBILITY OF THE CONTRACTOR TO ***FIELD VERIFY*** ALL DIMENSIONS, ELEVATIONS, AND MEMBER SIZES AS REQUIRED PRIOR TO BEGINNING CONSTRUCTION, FABRICATION, ETC.

PLAN

FULLY SPRINKLERED
CONSTRUCTION DOCUMENTS

No.	Date	Revisions
1	1/14/15	Amendment #4

CONSULTANTS:

MECHANICAL/ELECTRICAL:
KJWW ENGINEERING CONSULTANTS - ST. LOUIS
#15 SUNNEN DRIVE, SUITE 104
ST. LOUIS, MO 63141

PLUMBING:
303RD ENGINEERING GROUP, LLC
1935 ARSENAL STREET
ST. LOUIS, MO 63118

ESTIMATING:
KWAME BUILDING GROUP
1204 WASHINGTON AVE. SUITE 200
ST. LOUIS, MO 63103

LIFE SAFETY/FIRE PROTECTION:
CODE CONSULTANTS, INC.
2043 WOODLAND PARKWAY, SUITE 300
ST. LOUIS, MO 63146

ACOUSTICAL ENGINEERS:
ACOUSTICONTROL LLC
1709 WASHINGTON AVENUE, LOFT 300
ST. LOUIS, MO 63103

COMMISSIONING:
ZODIAC INTERNATIONAL
16100 CHESTERFIELD PARKWAY, SUITE 365
CHESTERFIELD, MO 63017

ENVIROMENTAL:
EVIRONMENTAL CONSULTANTS, LLC
#6 MEADOW HEIGHTS PROFESSIONAL PARK DR.
COLLINSVILLE, IL
62234

STRUCTURAL ENGINEER
kpff Consulting Engineers
1630 Des Peres Road, Suite 100
Saint Louis, MO 63131
(314) 835-0524 Fax (314) 835-0749
Mo. Certificate of Authority No. 2001010829

THIS MEDIA SHOULD NOT BE CONSIDERED A CERTIFIED DOCUMENT

ARCHITECT/ENGINEERS:

CHRISTNER
ARCHITECTS | DESIGNERS | PLANNERS | LANDSCAPE ARCHITECTS
168 N MERAMEC, SUITE 400 | ST. LOUIS, MISSOURI 63105
TEL 314 725 2927 | FAX 314 725 2928 | CHRISTNERINC.COM

The Professional Engineer whose personal seal and signature Appears on this page assumes responsibility only for what appears on this page and disclaims (pursuant to Section 327.411 RSMo) any responsibility for all other pages, plans, specifications, estimates, reports, or other documents or instruments not sealed by this Professional Engineer relating to, or intended to be used for, any part or parts of the engineering project to which this page refers.

DIRECTOR OF SPECIALTY CARE | INFECTION CONTROL PRACTITIONER | CHIEF ENGINEER | ASSISTANT DIRECTOR | ASSOCIATE DIRECTOR OF PATIENT SERVICES | CHIEF OF STAFF | ASSOCIATE DIRECTOR | MEDICAL CENTER DIRECTOR

Drawing Title: INTERSTITIAL MECHANICAL FLOOR PLAN

Project Title: INTENSIVE CARE UNIT

Project Number: 110348.01

Building Number: #1

Location: HARRY S. TRUMAN VAMC

Date	Checked	Drawn	Approved
12/30/13	JM	TJR	LDS

Drawing Number: SS 101

Dwg. 66 of 201

Office of Construction and Facilities Management

Department of Veterans Affairs

VA FORM 08-6231 PRINTED ON ORIGINAL SIZE OF SHEET IS 30" X 42"

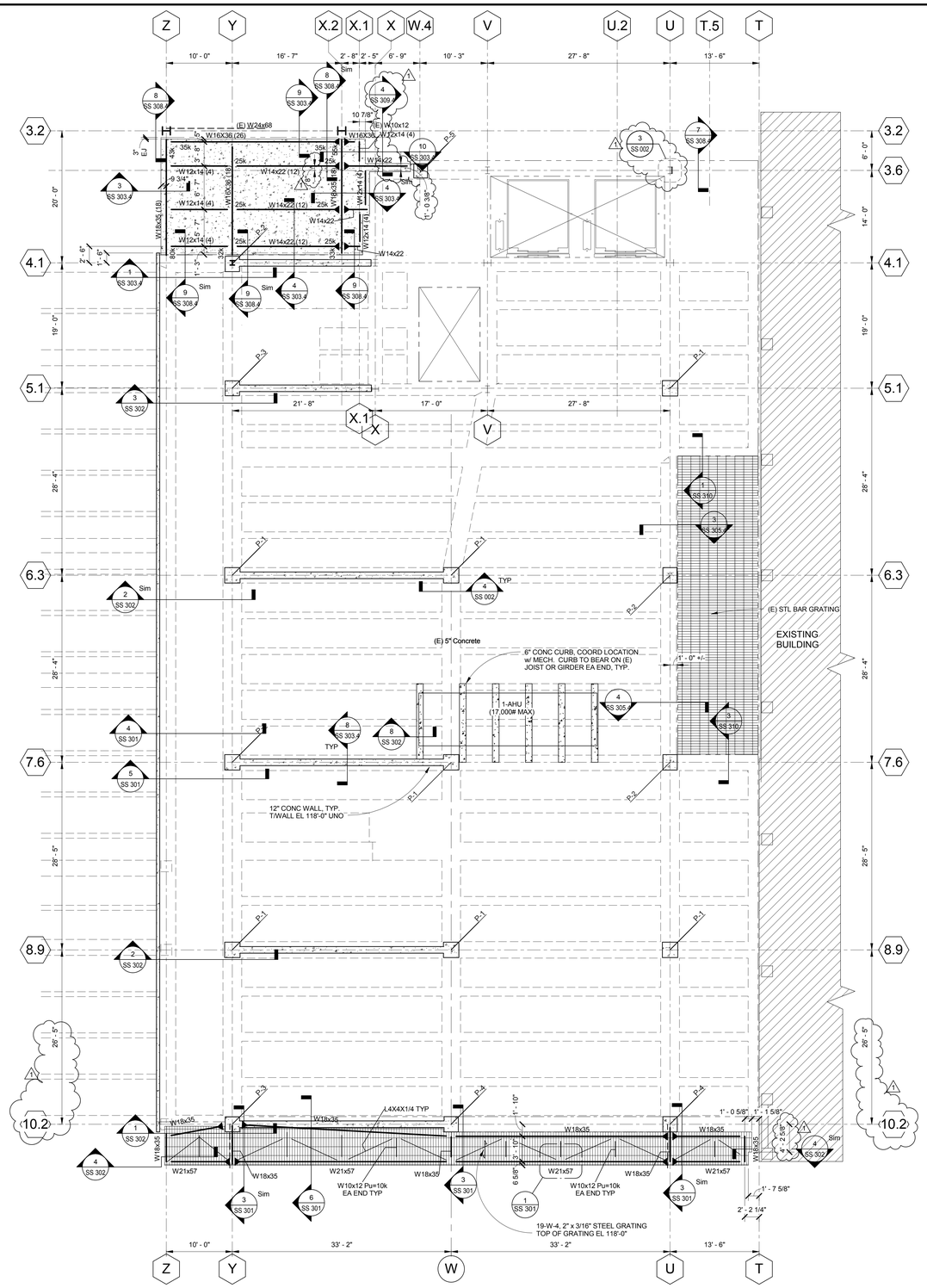

1 SS 101.4 INTERSTITIAL MECHANICAL LEVEL FLOOR PLAN
1/8" = 1'-0"

CONCRETE PEDESTAL SCHEDULE		
MARK	SIZE	REF: DETAIL
P-1	28" x 28"	9/SS401
P-2	26" x 28"	12/SS401
P-3	26" x 27"	11/SS401
P-4	28" x 26"	10/SS401
P-5	25" x 26"	13/SS401

NOTES:
1. EXISTING O. R. ROOF SLAB ELEVATION = 116'-0", FIELD VERIFY.
2. COLUMNS ARE CENTERED ON GRID LINES, UNO.
3. SEE ARCHITECT DRAWINGS FOR DEMOLITION PLANS.
4. GENERAL NOTES AND TYPICAL DETAILS ARE ON SHEET SS 001, SS 002 & SS 003.4.
5. TOP OF PILASTER = 118'-6" TYPICAL UNLESS NOTED OTHERWISE
6. ▶—— INDICATES MOMENT RESISTANT CONNECTION, SEE DETAILS ON SHEET SS 402.
7. ⋯ INDICATES NEW 3 1/4" LIGHT WEIGHT CONCRETE ON 2" x 20 ga GALV COMPOSITE METAL DECK (5 1/4" TOTAL THICKNESS) REINFORCE WITH 6x6-W2.9xW 2.9 WWR. COORDINATE LOCATION AND DIMENSIONS WITH ARCH.
8. REACTIONS SHOWN ON BEAMS ARE FACTORED SHEAR LOADS. BEAMS WITHOUT REACTIONS SHALL BE DESIGNED FOR 15k MIN FACTORED SHEAR LOAD.
   a.) CONNECTION DESIGN NOTATION:
   Vu = FACTORED VERTICAL SHEAR
   Pu = FACTORED AXIAL LOAD
   FORCES NOTED WITHOUT AN IDENTIFIER ARE Vu.
   b.) WHERE MULTIPLE FORCES ARE SHOWN, CONNECTION SHALL BE DESIGNED ASSUMING FORCES ACT SIMULTANEOUSLY.
9. REMOVE AND REPLACE EXISTING PARAPET FRAMING AS REQUIRED FOR INSTALLATION OF NEW VERTICAL BRACE. SEE ARCHITECTURAL DRAWINGS.

THE DIMENSIONS AND ELEVATIONS SHOWN FOR THE EXISTING CONSTRUCTION ARE ***NOT*** AS-BUILT DIMENSIONS BUT WERE OBTAINED FROM OTHER DRAWINGS AND DOCUMENTS. IT IS THE RESPONSIBILITY OF THE CONTRACTOR TO ***FIELD VERIFY*** ALL DIMENSIONS, ELEVATIONS, AND MEMBER SIZES AS REQUIRED PRIOR TO BEGINNING CONSTRUCTION, FABRICATION, ETC.

PLAN

FULLY SPRINKLERED
CONSTRUCTION DOCUMENTS

No.	Date	Revisions
1	1/14/15	Amendment #4

CONSULTANTS:

MECHANICAL/ELECTRICAL:
KJWW ENGINEERING CONSULTANTS - ST. LOUIS
#15 SUNNEN DRIVE, SUITE 104
ST. LOUIS, MO 63141

PLUMBING:
303RD ENGINEERING GROUP, LLC
1935 ARSENAL STREET
ST. LOUIS, MO 63118

ESTIMATING:
KWAME BUILDING GROUP
1204 WASHINGTON AVE. SUITE 200
ST. LOUIS, MO 63103

LIFE SAFETY/FIRE PROTECTION:
CODE CONSULTANTS, INC.
2043 WOODLAND PARKWAY, SUITE 300
ST. LOUIS, MO 63146

ACOUSTICAL ENGINEERS:
ACOUSTICONTROL LLC
1709 WASHINGTON AVENUE, LOFT 300
ST. LOUIS, MO 63103

COMMISSIONING:
ZODIAC INTERNATIONAL
16100 CHESTERFIELD PARKWAY, SUITE 365
CHESTERFIELD, MO 63017

ENVIROMENTAL:
EVIRONMENTAL CONSULTANTS, LLC
#6 MEADOW HEIGHTS PROFESSIONAL PARK DR.
COLLINSVILLE, IL
62234

STRUCTURAL ENGINEER
kpff Consulting Engineers
1630 Des Peres Road, Suite 100
Saint Louis, MO 63131
(314) 835-0524 Fax (314) 835-0749
Mo. Certificate of Authority No. 2001010829

THIS MEDIA SHOULD NOT BE CONSIDERED A CERTIFIED DOCUMENT

ARCHITECT/ENGINEERS:

CHRISTNER
ARCHITECTS | DESIGNERS | PLANNERS | LANDSCAPE ARCHITECTS
168 N MERAMEC, SUITE 400 | ST. LOUIS, MISSOURI 63105
TEL 314 725 2927 | FAX 314 725 2928 | CHRISTNERINC.COM

The Professional Engineer whose personal seal and signature Appears on this page assumes responsibility only for what appears on this page and disclaims (pursuant to Section 327.411 RSMo) any responsibility for all other pages, plans, specifications, estimates, reports, or other documents or instruments not sealed by this Professional Engineer relating to, or intended to be used for, any part or parts of the engineering project to which this page refers.

DIRECTOR OF SPECIALTY CARE	INFECTION CONTROL PRACTITIONER	CHIEF ENGINEER	ASSISTANT DIRECTOR	ASSOCIATE DIRECTOR OF PATIENT SERVICES	CHIEF OF STAFF	ASSOCIATE DIRECTOR	MEDICAL CENTER DIRECTOR

Drawing Title: INTERSTITIAL MECHANICAL FLOOR PLAN DEDUCT ALTERNATES 4,5

Project Title: INTENSIVE CARE UNIT

Project Number: 110348.01

Building Number: #1

Location: HARRY S. TRUMAN VAMC

Date	Checked	Drawn	Approved
9/4/14	Checker	Author	Approver

Drawing Number: SS 101.4

Dwg.105 of 201

Office of Construction and Facilities Management

Department of Veterans Affairs

VA FORM 08-6231 PRINTED ON ORIGINAL SIZE OF SHEET IS 30" X 42"

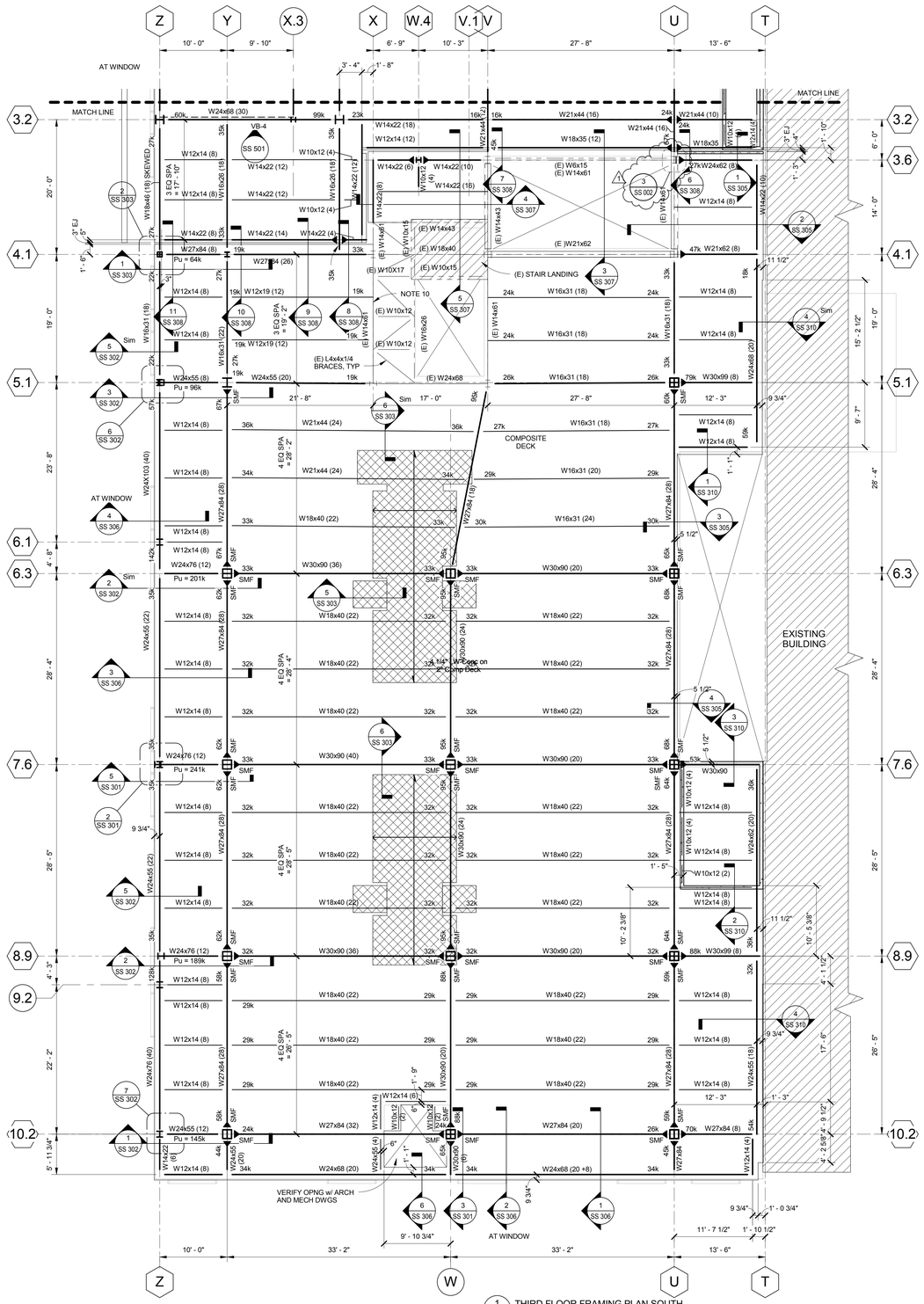

1 SS 102 THIRD FLOOR FRAMING PLAN SOUTH
1/8" = 1'-0"

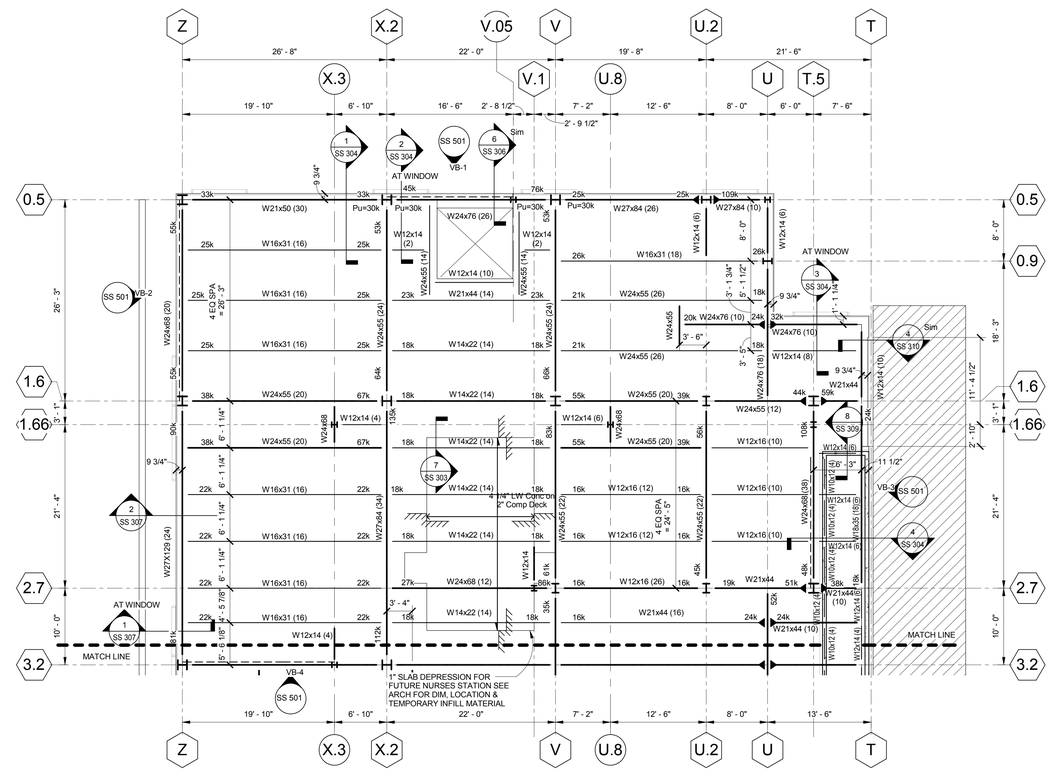

2 SS 102 THIRD FLOOR FRAMING PLAN NORTH
1/8" = 1'-0"

NOTES:

1. THIRD FLOOR FINISHED SLAB ELEVATION = 126'-5 1/4".
2. COLUMNS ARE CENTERED ON GRIDLINES, UNO.
3. FLOOR CONSTRUCTION TO BE 4 1/4" LIGHT WEIGHT CONCRETE ON 2" x 20 ga GALV COMPOSITE METAL DECK (6 1/4" TOTAL THICKNESS) REINFORCE WITH 6x6-W2.9xW 2.9 WWR.
4. [XX] INDICATES THE NUMBER OF STUDS PER BEAM, EQUALLY SPACED FROM MID SPAN OF THE BEAM, UNO.
5. ▶—— INDICATES MOMENT RESISTANT CONNECTION (SEE SS402 FOR DETAILS).
6. REACTIONS SHOWN ON STEEL BEAMS ARE FACTORED SHEAR LOADS. BEAMS WITHOUT REACTIONS SHALL BE DESIGNED FOR A MINIMUM 15 KIPS FACTORED SHEAR LOAD.
7. ⌒ INDICATES A 1" SLAB DEPRESSION WITH 2" LIGHT WEIGHT CONCRETE ON EPS-12 (MIN) GEOFOAM FILL REINFORCED WITH 6x6-W1.4xW1.4 WWR. COORDINATE LOCATION AND DIMINSION WITH ARCH.
8. SMF INDICATES SPECIAL MOMENT FRAME CONNECTION (SEE SS402 FOR DETAILS).
9. REACTIONS SHOWN ON BEAMS ARE FACTORED SHEAR LOADS. BEAMS WITHOUT REACTIONS SHALL BE DESIGNED FOR 15k MIN FACTORED SHEAR LOAD.
   a.) CONNECTION DESIGN NOTATION:
   Vu = FACTORED VERTICAL SHEAR
   Pu = FACTORED AXIAL LOAD FORCES NOTED WITHOUT AN IDENTIFIER ARE Vu.
   b.) WHERE MULTIPLE FORCES ARE SHOWN, CONNECTION SHALL BE DESIGNED ASSUMING FORCES ACT SIMULTANEOUSLY.
10. REMOVE (E) VERTICAL BRACE & GUSSET PL BTWEEN LINES 4.1 & 5.1 ON GRID LINE X ALL LEVELS
11. SLOPE SLAB LOCALLY AT DRAINS. SEE ARCH & PLUMBING FOR LOCATIONS & DETAILS. SLAB RECESS FOR SLOPE NOT TO EXCEED 2".
12. PROVIDE 2'-0" x 2'-0" x 1" MAX SLAB DEPRESSION IN (N) FLOOR SLAB AT TOILETS. COORDINATE FINAL SIZE AND LOCATION WITH ARCH & PLUMBING.
13. WALL MOUNTED PATIENT BOOM SUPPORT AND BRACING BY SUPPLIER.
14. GENERAL NOTES AND TYPICAL DETAILS ARE ON SHEET SS 001 THRU SS 003.

THE DIMENSIONS AND ELEVATIONS SHOWN FOR THE EXISTING CONSTRUCTION ARE ***NOT*** AS-BUILT DIMENSIONS BUT WERE OBTAINED FROM FIELD MEASUREMENTS, OTHER DRAWINGS, AND DOCUMENTS. IT IS THE RESPONSIBILITY OF THE CONTRACTOR TO ***FIELD VERIFY*** ALL DIMENSIONS, ELEVATIONS, AND MEMBER SIZES AS REQUIRED PRIOR TO BEGINNING CONSTRUCTION, FABRICATION, ETC.

PLAN

FULLY SPRINKLERED
CONSTRUCTION DOCUMENTS

No.	Date	Revisions
1	1/14/15	Amendment #4

CONSULTANTS:

MECHANICAL/ELECTRICAL:
KJWW ENGINEERING CONSULTANTS - ST. LOUIS
#15 SUNNEN DRIVE, SUITE 104
ST. LOUIS, MO 63141

PLUMBING:
303RD ENGINEERING GROUP, LLC
1935 ARSENAL STREET
ST. LOUIS, MO 63118

ESTIMATING:
KWAME BUILDING GROUP
1204 WASHINGTON AVE. SUITE 200
ST. LOUIS, MO 63103

LIFE SAFETY/FIRE PROTECTION:
CODE CONSULTANTS, INC.
2043 WOODLAND PARKWAY, SUITE 300
ST. LOUIS, MO 63146

ACOUSTICAL ENGINEERS:
ACOUSTICONTROL LLC
1709 WASHINGTON AVENUE, LOFT 300
ST. LOUIS, MO 63103

COMMISSIONING:
ZODIAC INTERNATIONAL
16100 CHESTERFIELD PARKWAY, SUITE 365
CHESTERFIELD, MO 63017

ENVIROMENTAL:
EVIRONMENTAL CONSULTANTS, LLC
#6 MEADOW HEIGHTS PROFESSIONAL PARK DR.
COLLINSVILLE, IL
62234

STRUCTURAL ENGINEER
kpff Consulting Engineers
1630 Des Peres Road, Suite 100
Saint Louis, MO 63131
(314) 835-0624 Fax (314) 835-0749
Mo. Certificate of Authority No. 2001010829

THIS MEDIA SHOULD NOT BE CONSIDERED A CERTIFIED DOCUMENT

ARCHITECT/ENGINEERS:

CHRISTNER
ARCHITECTS | DESIGNERS | PLANNERS | LANDSCAPE ARCHITECTS
168 N MERAMEC, SUITE 400 | ST. LOUIS, MISSOURI 63105
TEL 314 725 2927 | FAX 314 725 2928 | CHRISTNERINC.COM

The Professional Engineer whose personal seal and signature Appears on this page assumes responsibility only for what appears on this page and disclaims (pursuant to Section 327.411 RSMo) any responsibility for all other pages, plans, specifications, estimates, reports, or other documents or instruments not sealed by this Professional Engineer relating to, or intended to be used for, any part or parts of the engineering project to which this page refers.

DIRECTOR OF SPECIALTY CARE | INFECTION CONTROL PRACTITIONER | CHIEF ENGINEER | ASSISTANT DIRECTOR | ASSOCIATE DIRECTOR OF PATIENT SERVICES | CHIEF OF STAFF | ASSOCIATE DIRECTOR | MEDICAL CENTER DIRECTOR

Drawing Title: THIRD FLOOR FRAMING PLAN

Project Title: INTENSIVE CARE UNIT

Project Number: 110348.01

Building Number: #1

Location: HARRY S. TRUMAN VAMC

Drawing Number: SS 102

Dwg. 67 of 201

Date	Checked	Drawn	Approved
12/30/13	JM	TJR	LDS

Office of Construction and Facilities Management

Department of Veterans Affairs

VA FORM 08-6231 PRINTED ON ORIGINAL SIZE OF SHEET IS 30" X 42"

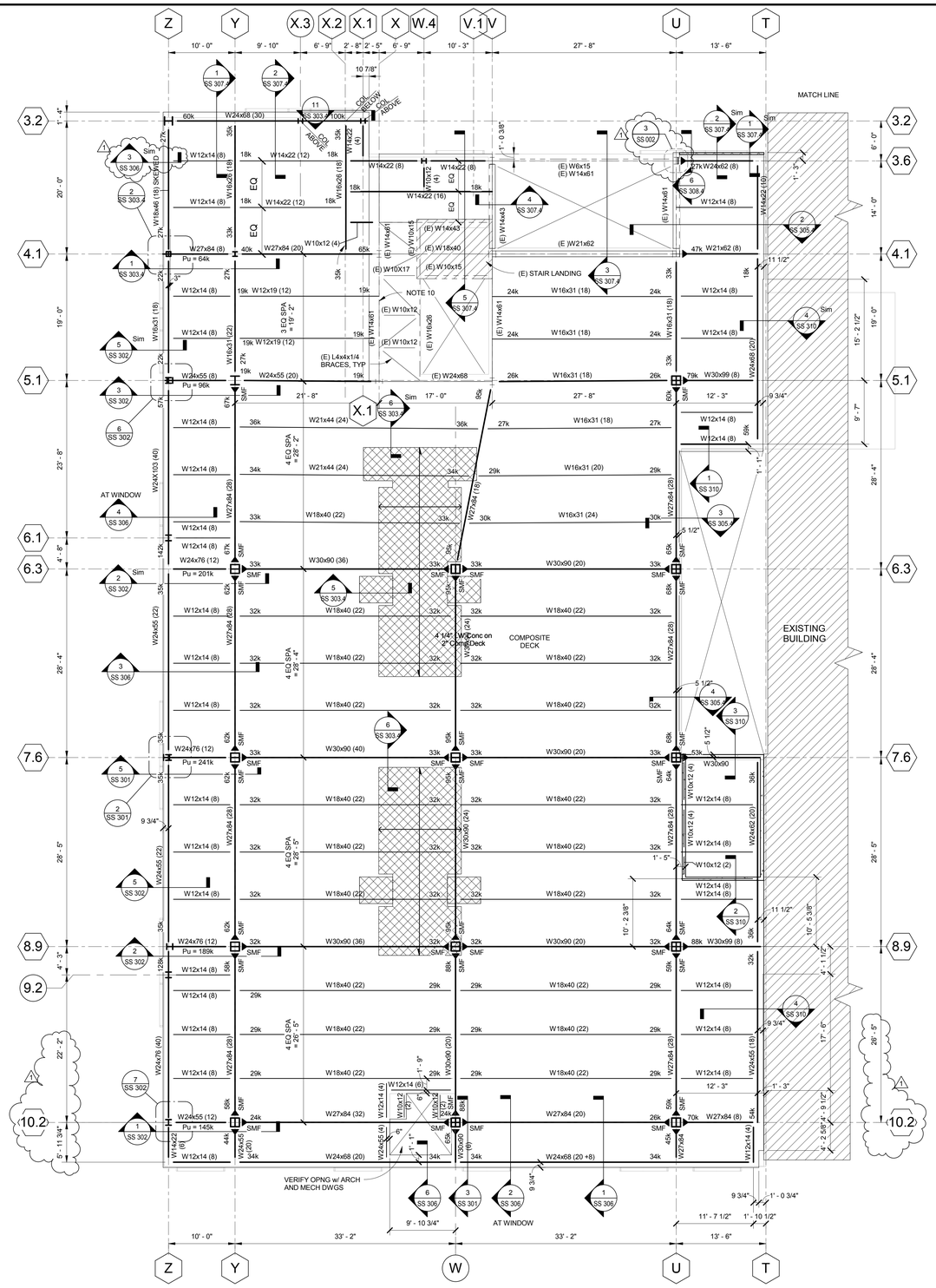

1 THIRD FLOOR FRAMING PLAN
SS 102.4 1/8" = 1'-0"

NOTES:

1. THIRD FLOOR FINISHED SLAB ELEVATION = 126'-5 1/4".
2. COLUMNS ARE CENTERED ON GRIDLINES, UNO.
3. FLOOR CONSTRUCTION TO BE 4 1/4" LIGHT WEIGHT CONCRETE ON 2" x 20 ga GALV COMPOSITEMETAL DECK (6 1/4" TOTAL THICKNESS) REINFORCE WITH 6x6-W2.9xW 2.9 WWR.
4. [XX] INDICATES THE NUMBER OF STUDS PER BEAM, EQUALLY SPACED FROM MID SPAN OF THE BEAM, UNO.
5. ▶— INDICATES MOMENT RESISTANT CONNECTION (SEE SS402 FOR DETAILS).
6. REACTIONS SHOWN ON STEEL BEAMS ARE FACTORED SHEAR LOADS. BEAMS WITHOUT REACTIONS SHALL BE DESIGNED FOR A MINIMUM 15 KIPS FACTORED SHEAR LOAD.
7. ▭ INDICATES A 1" SLAB DEPRESSION WITH 2" LIGHT WEIGHT CONCRETE ON EPS-12 (MIN) GEOFOAM FILL REINFORCED WITH 6x6-W1.4xW1.4 WWR. COORDINATE LOCATION AND DIMINSION WITH ARCH.
8. SMF INDICATES SPECIAL MOMENT FRAME CONNECTION (SEE SS402 FOR DETAILS).
9. REACTIONS SHOWN ON BEAMS ARE FACTORED SHEAR LOADS. BEAMS WITHOUT REACTIONS SHALL BE DESIGNED FOR 15k MIN FACTORED SHEAR LOAD.
   a.) CONNECTION DESIGN NOTATION:
      Vu = FACTORED VERTICAL SHEAR
      Pu = FACTORED AXIAL LOAD
      FORCES NOTED WITHOUT AN IDENTIFIER ARE Vu.
   b.) WHERE MULTIPLE FORCES ARE SHOWN, CONNECTION SHALL BE DESIGNED ASSUMING FORCES ACT SIMULTANEOUSLY.
10. REMOVE (E) VERTICAL BRACE & GUSSET PL BTWEEN LINES 4.1 & 5.1 ON GRID LINE X ALL LEVELS
11. SLOPE SLAB LOCALLY AT DRAINS. SEE ARCH & PLUMBING FOR LOCATIONS & DETAILS. SLAB RECESS FOR SLOPE NOT TO EXCEED 2".
12. PROVIDE 2'-0" x 2'-0" x 1" MAX SLAB DEPRESSION IN (N) FLOOR SLAB AT TOILETS. COORDINATE FINAL SIZE AND LOCATION WITH ARCH & PLUMBING.
13. WALL MOUNTED PATIENT BOOM SUPPORT AND BRACING BY SUPPLIER.
14. GENERAL NOTES AND TYPICAL DETAILS ARE ON SHEET SS 001, SS 002 & SS 003.4.

THE DIMENSIONS AND ELEVATIONS SHOWN FOR THE EXISTING CONSTRUCTION ARE ***NOT*** AS-BUILT DIMENSIONS BUT WERE OBTAINED FROM OTHER DRAWINGS AND DOCUMENTS. IT IS THE RESPONSIBILITY OF THE CONTRACTOR TO ***FIELD VERIFY*** ALL DIMENSIONS, ELEVATIONS, AND MEMBER SIZES AS REQUIRED PRIOR TO BEGINNING CONSTRUCTION, FABRICATION, ETC.

PLAN

FULLY SPRINKLERED
CONSTRUCTION DOCUMENTS

No.	Date	Revisions
1	1/14/15	Amendment #4

CONSULTANTS:

MECHANICAL/ELECTRICAL:
KJWW ENGINEERING CONSULTANTS - ST. LOUIS
#15 SUNNEN DRIVE, SUITE 104
ST. LOUIS, MO 63141

PLUMBING:
303RD ENGINEERING GROUP, LLC
1935 ARSENAL STREET
ST. LOUIS, MO 63118

ESTIMATING:
KWAME BUILDING GROUP
1204 WASHINGTON AVE. SUITE 200
ST. LOUIS, MO 63103

LIFE SAFETY/FIRE PROTECTION:
CODE CONSULTANTS, INC.
2043 WOODLAND PARKWAY, SUITE 300
ST. LOUIS, MO 63146

ACOUSTICAL ENGINEERS:
ACOUSTICONTROL LLC
1709 WASHINGTON AVENUE, LOFT 300
ST. LOUIS, MO 63103

COMMISSIONING:
ZODIAC INTERNATIONAL
16100 CHESTERFIELD PARKWAY, SUITE 365
CHESTERFIELD, MO 63017

ENVIROMENTAL:
EVIRONMENTAL CONSULTANTS, LLC
#6 MEADOW HEIGHTS PROFESSIONAL PARK DR.
COLLINSVILLE, IL
62234

STRUCTURAL ENGINEER
kpff Consulting Engineers
1630 Des Peres Road, Suite 100
Saint Louis, MO 63131
(314) 835-0524 Fax (314) 835-0749
Mo. Certificate of Authority No. 2001010829

THIS MEDIA SHOULD NOT BE CONSIDERED A CERTIFIED DOCUMENT

ARCHITECT/ENGINEERS:

CHRISTNER
ARCHITECTS | DESIGNERS | PLANNERS | LANDSCAPE ARCHITECTS
168 N MERAMEC, SUITE 400 | ST. LOUIS, MISSOURI 63105
TEL 314 725 2927 | FAX 314 725 2928 | CHRISTNERINC.COM

The Professional Engineer whose personal seal and signature Appears on this page assumes responsibility only for what appears on this page and disclaims (pursuant to Section 327.411 RSMo) any responsibility for all other pages, plans, specifications, estimates, reports, or other documents or instruments not sealed by this Professional Engineer relating to, or intended to be used for, any part or parts of the engineering project to which this page refers.

DIRECTOR OF SPECIALTY CARE	INFECTION CONTROL PRACTITIONER	CHIEF ENGINEER	ASSISTANT DIRECTOR	ASSOCIATE DIRECTOR OF PATIENT SERVICES	CHIEF OF STAFF	ASSOCIATE DIRECTOR	MEDICAL CENTER DIRECTOR

Drawing Title: THIRD FLOOR FRAMING PLAN DEDUCT ALTERNATES 4,5

Project Title: INTENSIVE CARE UNIT

Project Number: 110348.01

Building Number: #1

Location: HARRY S. TRUMAN VAMC

Date	Checked	Drawn	Approved
9/4/14	Checker	Author	Approver

Drawing Number: SS 102.4

Dwg.106 of 201

Office of Construction and Facilities Management

Department of Veterans Affairs

VA FORM 08-6231 PRINTED ON ORIGINAL SIZE OF SHEET IS 30" X 42"

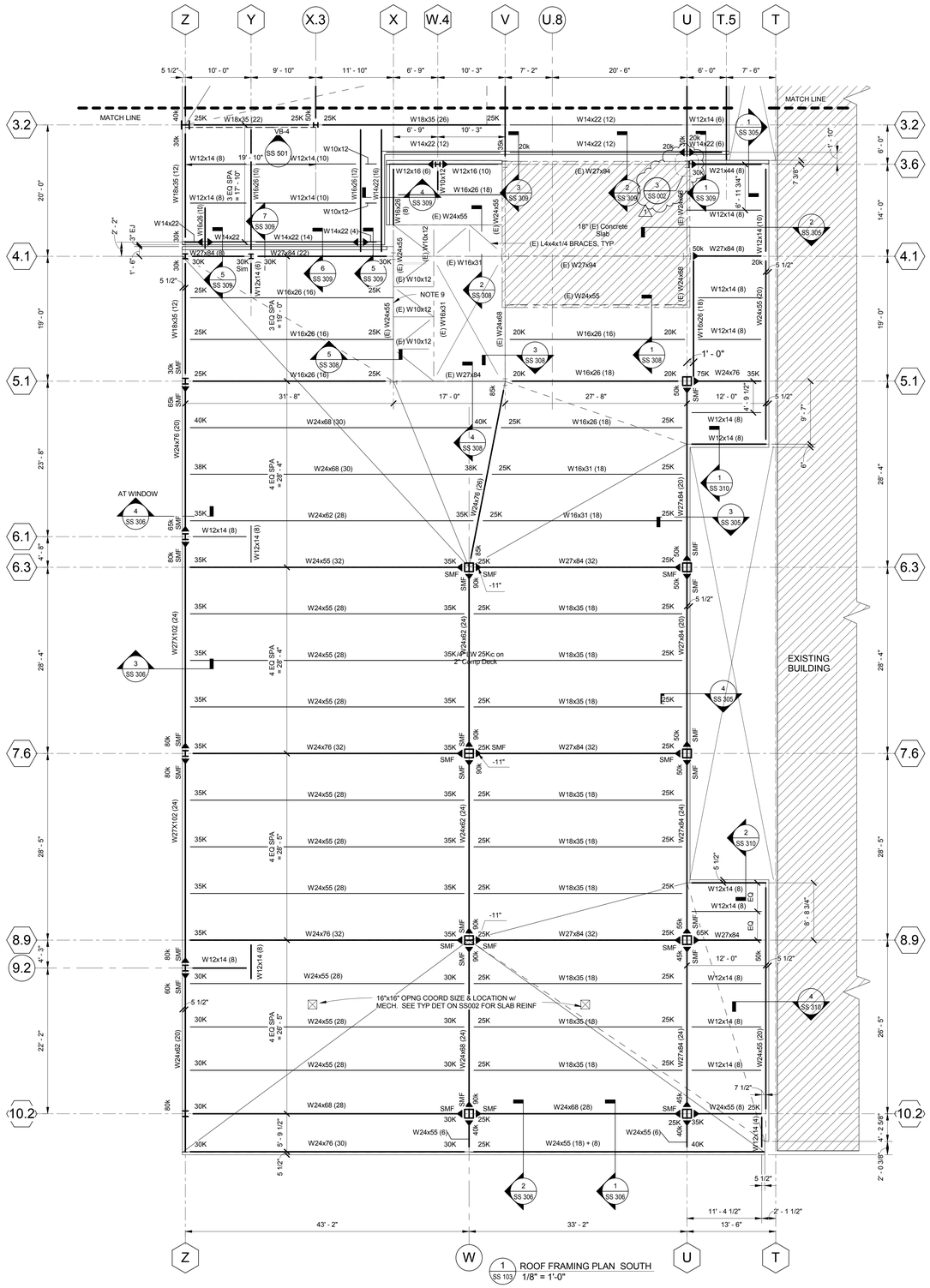

1 SS 103 ROOF FRAMING PLAN SOUTH
1/8" = 1'-0"

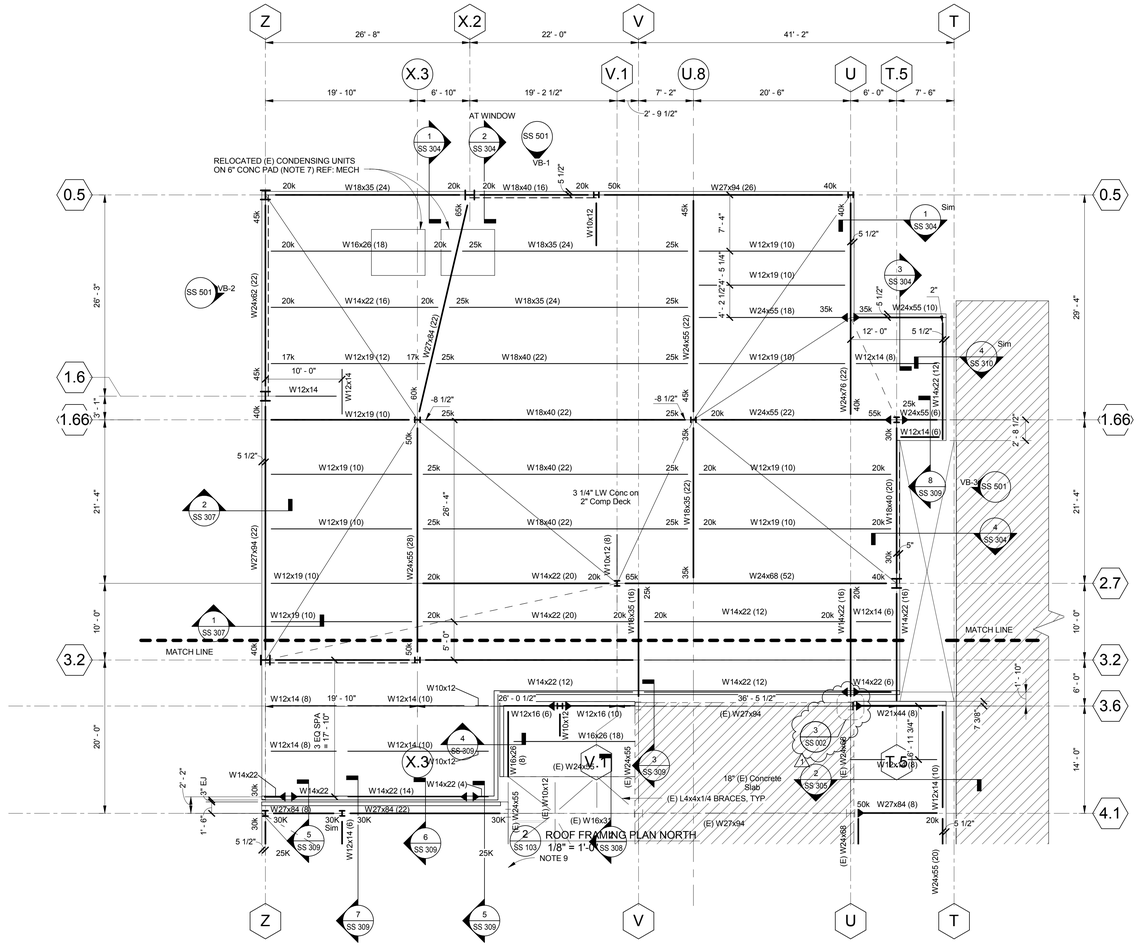

2 SS 103 ROOF FRAMING PLAN NORTH
1/8" = 1'-0"
NOTE 9

NOTES:

1. ROOF FINISHED SLAB ELEVATION = 142'-2 1/2", UNO. SEE PLAN FOR ROOF STEEL SLOPES.
2. COLUMNS ARE CENTERED ON GRIDLINES, UNO.
3. ROOF CONSTRUCTION TO BE 3 1/4" LIGHT WEIGHT CONCRETE ON 2" x 20 ga GALV COMPOSITE METAL DECK (5 1/4" TOTAL THICKNESS) REINFORCE WITH #3 @ 15"oc EACH WAY AT SLAB MID DEPTH.
4. [XX] INDICATES THE NUMBER OF STUDS PER BEAM, EQUALLY SPACED FROM MID SPAN OF THE BEAM, UNO.
5. ►—— INDICATES MOMENT RESISTANT CONNECTION (SEE SHEET SS402 FOR DETAILS).
6. SMF INDICATES SPECIAL MOMENT FRAME CONNECTION (SEE SS402 FOR DETAILS).
7. 6" EQUIPMENT PAD, REINF w/ #3 @ 12"oc EW MIDHEIGHT COORD ALL SIZES AND LOCATIONS WITH MECH EQUIPMENT SUPPLIER.
8. REACTIONS SHOWN ON BEAMS ON PLAN ARE FACTORED SHEAR LOADS WITHOUT CONSIDERING BLAST LOADS. BEAM REACTIONS INCLUDING BLAST LOADS ARE SHOWN BELOW. BEAMS SHALL BE DESIGNED FOR GREATEST OF REACTIONS SHOWN ON PLAN OR THE REACTIONS NOTED IN 8.c.) BELOW.
   BEAMS WITHOUT REACTIONS SHALL BE DESIGNED FOR 20k MIN FACTORED SHEAR LOAD, UNO.
   a.) CONNECTION DESIGN NOTATION:
   Vu = FACTORED VERTICAL SHEAR
   Pu = FACTORED AXIAL LOAD
   FORCES NOTED WITHOUT AN IDENTIFIER ARE Vu.
   b.) WHERE MULTIPLE FORCES ARE SHOWN, CONNECTION SHALL BE DESIGNED ASSUMING FORCES ACT SIMULTANEOUSLY.
   c.) FACTORED REACTIONS INCLUDING BLAST LOADS:

BEAMS	REACTION (KIPS)	GIRDERS	REACTIONS (KIPS)
W10	20		
W12	30	W12	36
W14	42	W14	58
W16	55	W16	80
W18	67	W18	108
W21	80	W21	120
W24	120	W24	146
W27	167	W27	160

9. REMOVE (E) VERTICAL BRACE & GUSSET PL BTWEEN LINES 4.1 & 5 ON GRID LINE X ALL LEVELS
10. GENERAL NOTES AND TYPICAL DETAILS ARE ON SHEET SS 001 THRU SS 003.

THE DIMENSIONS AND ELEVATIONS SHOWN FOR THE EXISTING CONSTRUCTION ARE ***NOT*** AS-BUILT DIMENSIONS BUT WERE OBTAINED FROM FIELD MEASUREMENTS, OTHER DRAWINGS, AND DOCUMENTS. IT IS THE RESPONSIBILITY OF THE CONTRACTOR TO ***FIELD VERIFY*** ALL DIMENSIONS, ELEVATIONS, AND MEMBER SIZES AS REQUIRED PRIOR TO BEGINNING CONSTRUCTION, FABRICATION, ETC.

PLAN

FULLY SPRINKLERED
CONSTRUCTION DOCUMENTS

No.	Date	Revisions
1	1/14/15	Amendment #4

CONSULTANTS:

MECHANICAL/ELECTRICAL:
KJWW ENGINEERING CONSULTANTS - ST. LOUIS
#15 SUNNEN DRIVE, SUITE 104
ST. LOUIS, MO 63141

PLUMBING:
303RD ENGINEERING GROUP, LLC
1935 ARSENAL STREET
ST. LOUIS, MO 63118

ESTIMATING:
KWAME BUILDING GROUP
1204 WASHINGTON AVE. SUITE 200
ST. LOUIS, MO 63103

LIFE SAFETY/FIRE PROTECTION:
CODE CONSULTANTS, INC.
2043 WOODLAND PARKWAY, SUITE 300
ST. LOUIS, MO 63146

ACOUSTICAL ENGINEERS:
ACOUSTICONTROL LLC
1709 WASHINGTON AVENUE, LOFT 300
ST. LOUIS, MO 63103

COMMISSIONING:
ZODIAC INTERNATIONAL
16100 CHESTERFIELD PARKWAY, SUITE 365
CHESTERFIELD, MO 63017

ENVIROMENTAL:
EVIRONMENTAL CONSULTANTS, LLC
#6 MEADOW HEIGHTS PROFESSIONAL PARK DR.
COLLINSVILLE, IL
62234

STRUCTURAL ENGINEER
kpff Consulting Engineers
1630 Des Peres Road, Suite 100
Saint Louis, MO 63131
(314) 835-0524 Fax (314) 835-0749
Mo. Certificate of Authority No. 2001010829

THIS MEDIA SHOULD NOT BE CONSIDERED A CERTIFIED DOCUMENT

ARCHITECT/ENGINEERS:

CHRISTNER
ARCHITECTS | DESIGNERS | PLANNERS | LANDSCAPE ARCHITECTS
168 N MERAMEC, SUITE 400 | ST. LOUIS, MISSOURI 63105
TEL 314 725 2927 | FAX 314 725 2928 | CHRISTNERINC.COM

The Professional Engineer whose personal seal and signature Appears on this page assumes responsibility only for what appears on this page and disclaims (pursuant to Section 327.411 RSMo) any responsibility for all other pages, plans, specifications, estimates, reports, or other documents or instruments not sealed by this Professional Engineer relating to, or intended to be used for, any part or parts of the engineering project to which this page refers.

DIRECTOR OF SPECIALTY CARE	INFECTION CONTROL PRACTITIONER	CHIEF ENGINEER	ASSISTANT DIRECTOR	ASSOCIATE DIRECTOR OF PATIENT SERVICES	CHIEF OF STAFF	ASSOCIATE DIRECTOR	MEDICAL CENTER DIRECTOR

Drawing Title: ROOF FRAMING PLAN

Project Title: INTENSIVE CARE UNIT

Project Number: 110348.01

Building Number: #1

Location: HARRY S. TRUMAN VAMC

Date	Checked	Drawn	Approved
12/30/13	JM	TJR	LDS

Drawing Number: SS 103

Dwg. 68 of 201

Office of Construction and Facilities Management

Department of Veterans Affairs

VA FORM 08-6231 PRINTED ON ORIGINAL SIZE OF SHEET IS 30" X 42"

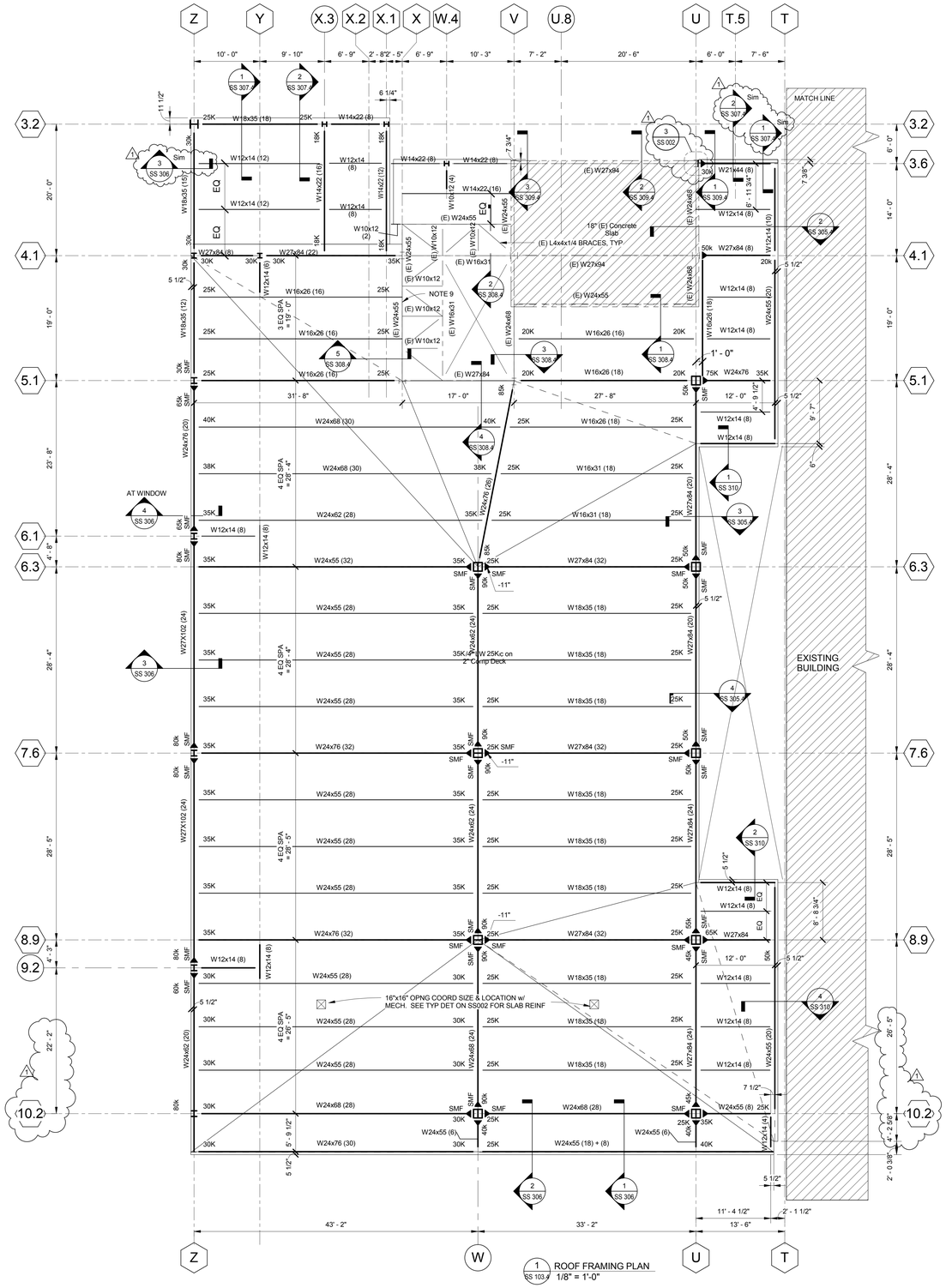

1 SS 103.4 ROOF FRAMING PLAN
1/8" = 1'-0"

NOTES:

1. ROOF FINISHED SLAB ELEVATION = 142'-2 1/2", UNO. SEE PLAN FOR ROOF STEEL SLOPES.
2. COLUMNS ARE CENTERED ON GRIDLINES, UNO.
3. ROOF CONSTRUCTION TO BE 3 1/4" LIGHT WEIGHT CONCRETE ON 2" x 20 ga GALV COMPOSITE METAL DECK (5 1/4" TOTAL THICKNESS) REINFORCE WITH #3 @ 15"oc EACH WAY AT SLAB MID DEPTH.
4. [XX] INDICATES THE NUMBER OF STUDS PER BEAM, EQUALLY SPACED FROM MID SPAN OF THE BEAM, UNO.
5. ▶——◀ INDICATES MOMENT RESISTANT CONNECTION (SEE SHEET SS402 FOR DETAILS).
6. SMF INDICATES SPECIAL MOMENT FRAME CONNECTION (SEE SS402 FOR DETAILS).
7. 6" EQUIPMENT PAD, REINF w/ #3 @ 12"oc EW MIDHEIGHT COORD ALL SIZES AND LOCATIONS WITH MECH EQUIPMENT SUPPLIER.
8. REACTIONS SHOWN ON BEAMS ON PLAN ARE FACTORED SHEAR LOADS WITHOUT CONSIDERING BLAST LOADS. BEAM REACTIONS INCLUDING BLAST LOADS ARE SHOWN BELOW. BEAMS SHALL BE DESIGNED FOR GREATEST OF REACTIONS SHOWN ON PLAN OR THE REACTIONS NOTED IN 8.c.) BELOW. BEAMS WITHOUT REACTIONS SHALL BE DESIGNED FOR 20k MIN FACTORED SHEAR LOAD, UNO.
   a.) CONNECTION DESIGN NOTATION:
      Vu = FACTORED VERTICAL SHEAR
      Pu = FACTORED AXIAL LOAD
      FORCES NOTED WITHOUT AN IDENTIFIER ARE Vu.
   b.) WHERE MULTIPLE FORCES ARE SHOWN, CONNECTION SHALL BE DESIGNED ASSUMING FORCES ACT SIMULTANEOUSLY.
   c.) FACTORED REACTIONS INCLUDING BLAST LOADS:

BEAMS	REACTION (KIPS)	GIRDERS	REACTIONS (KIPS)
W10	20		
W12	30	W12	36
W14	42	W14	58
W16	55	W16	80
W18	67	W18	108
W21	80	W21	120
W24	120	W24	146
W27	167	W27	160

9. REMOVE (E) VERTICAL BRACE & GUSSET PL BTWEEN LINES 4.1 & 5 ON GRID LINE X ALL LEVELS
10. GENERAL NOTES AND TYPICAL DETAILS ARE ON SHEET SS 001 THRU SS 003.

THE DIMENSIONS AND ELEVATIONS SHOWN FOR THE EXISTING CONSTRUCTION ARE ***NOT*** AS-BUILT DIMENSIONS BUT WERE OBTAINED FROM FIELD MEASUREMENTS, OTHER DRAWINGS, AND DOCUMENTS. IT IS THE RESPONSIBILITY OF THE CONTRACTOR TO ***FIELD VERIFY*** ALL DIMENSIONS, ELEVATIONS, AND MEMBER SIZES AS REQUIRED PRIOR TO BEGINNING CONSTRUCTION, FABRICATION, ETC.

PLAN

FULLY SPRINKLERED
CONSTRUCTION DOCUMENTS

No.	Date	Revisions
1	1/14/15	Amendment #4

CONSULTANTS:

MECHANICAL/ELECTRICAL:
KJWW ENGINEERING CONSULTANTS - ST. LOUIS
#15 SUNNEN DRIVE, SUITE 104
ST. LOUIS, MO 63141

PLUMBING:
303RD ENGINEERING GROUP, LLC
1935 ARSENAL STREET
ST. LOUIS, MO 63118

ESTIMATING:
KWAME BUILDING GROUP
1204 WASHINGTON AVE. SUITE 200
ST. LOUIS, MO 63103

LIFE SAFETY/FIRE PROTECTION:
CODE CONSULTANTS, INC.
2043 WOODLAND PARKWAY, SUITE 300
ST. LOUIS, MO 63146

ACOUSTICAL ENGINEERS:
ACOUSTICONTROL LLC
1709 WASHINGTON AVENUE, LOFT 300
ST. LOUIS, MO 63103

COMMISSIONING:
ZODIAC INTERNATIONAL
16100 CHESTERFIELD PARKWAY, SUITE 365
CHESTERFIELD, MO 63017

ENVIROMENTAL:
EVIRONMENTAL CONSULTANTS, LLC
#6 MEADOW HEIGHTS PROFESSIONAL PARK DR.
COLLINSVILLE, IL
62234

STRUCTURAL ENGINEER
kpff Consulting Engineers
1630 Des Peres Road, Suite 100
Saint Louis, MO 63131
(314) 835-0524 Fax (314) 835-0749
Mo. Certificate of Authority No. 2001010829

THIS MEDIA SHOULD NOT BE CONSIDERED A CERTIFIED DOCUMENT

ARCHITECT/ENGINEERS:

CHRISTNER
ARCHITECTS | DESIGNERS | PLANNERS | LANDSCAPE ARCHITECTS
168 N MERAMEC, SUITE 400 | ST. LOUIS, MISSOURI 63105
TEL 314 725 2927 | FAX 314 725 2928 | CHRISTNERINC.COM

The Professional Engineer whose personal seal and signature Appears on this page assumes responsibility only for what appears on this page and disclaims (pursuant to Section 327.411 RSMo) any responsibility for all other pages, plans, specifications, estimates, reports, or other documents or instruments not sealed by this Professional Engineer relating to, or intended to be used for, any part or parts of the engineering project to which this page refers.

DIRECTOR OF SPECIALTY CARE | INFECTION CONTROL PRACTITIONER | CHIEF ENGINEER | ASSISTANT DIRECTOR | ASSOCIATE DIRECTOR OF PATIENT SERVICES | CHIEF OF STAFF | ASSOCIATE DIRECTOR | MEDICAL CENTER DIRECTOR

Drawing Title: ROOF FRAMING PLAN DEDUCT ALTERNATES 4,5

Project Title: INTENSIVE CARE UNIT

Project Number: 110348.01

Building Number: #1

Location: HARRY S. TRUMAN VAMC

Date	Checked	Drawn	Approved
9/4/14	JM	TJR	LDS

Drawing Number: SS 103.4

Dwg 107 of 201

Office of Construction and Facilities Management

Department of Veterans Affairs

VA FORM 08-6231 PRINTED ON ORIGINAL SIZE OF SHEET IS 30" X 42"

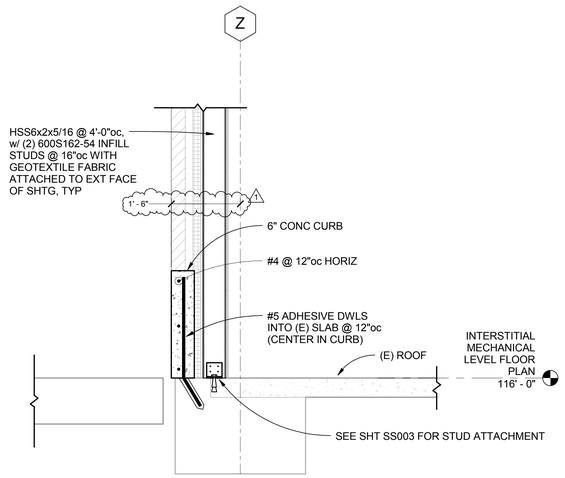

4 SS 301 SECTION 3/4" = 1'-0"

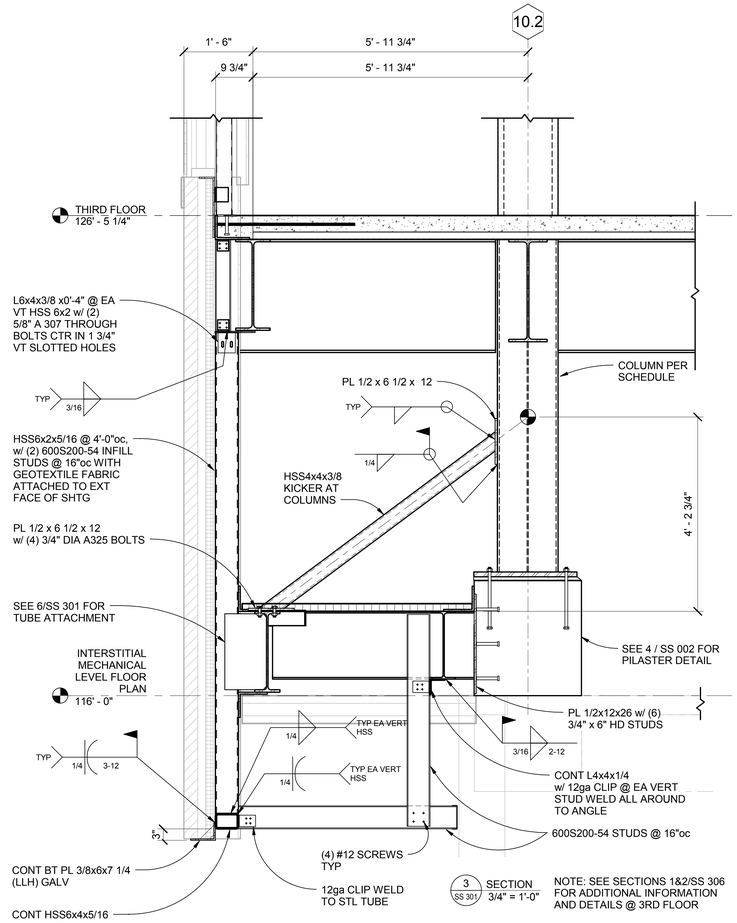

3 SS 301 SECTION 3/4" = 1'-0"

NOTE: SEE SECTIONS 1&2/SS 306 FOR ADDITIONAL INFORMATION AND DETAILS @ 3RD FLOOR

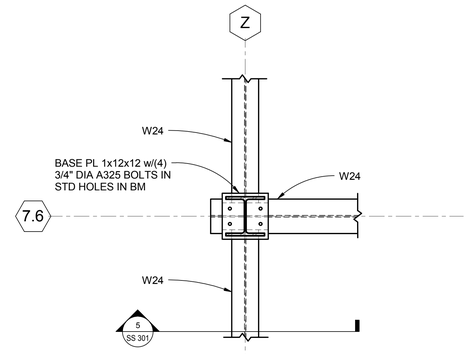

2 SS 301 BASE PLATE DETAIL 3/4" = 1'-0"

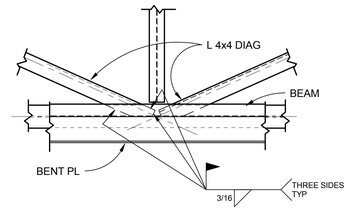

1 SS 301 DETAIL 3/4" = 1'-0"

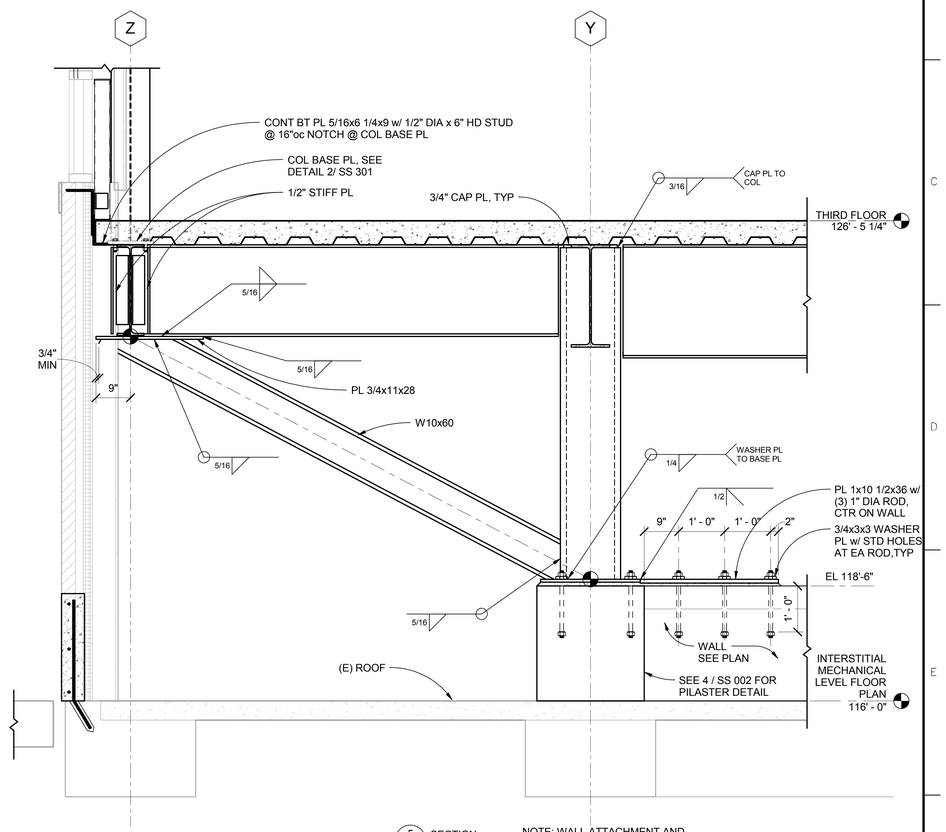

5 SS 301 SECTION 3/4" = 1'-0"

NOTE: WALL ATTACHMENT AND DETAILS NOT SHOWN FOR CLARITY SEE DETAILS 4/SS301 & 1&2/SS306 FOR ADDITIONAL INFORMATION

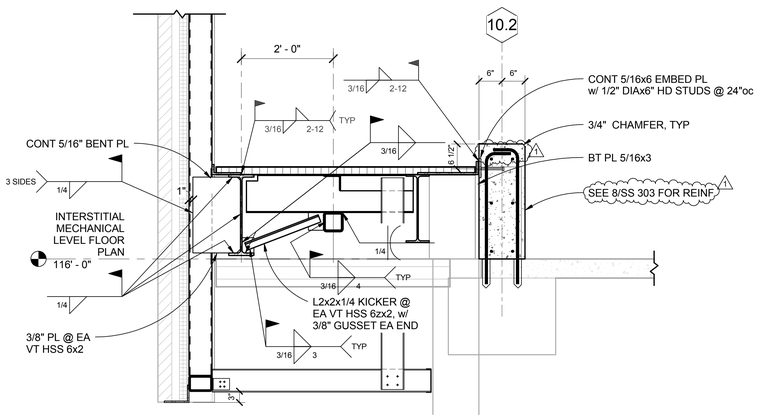

6 SS 301 SECTION 3/4" = 1'-0"

FOR BALANCE OF INFORMATION REF: SECTION 3/SS301

THE DIMENSIONS AND ELEVATIONS SHOWN FOR THE EXISTING CONSTRUCTION ARE ***NOT*** AS-BUILT DIMENSIONS BUT WERE OBTAINED FROM OTHER DRAWINGS AND DOCUMENTS. IT IS THE RESPONSIBILITY OF THE CONTRACTOR TO ***FIELD VERIFY*** ALL DIMENSIONS, ELEVATIONS, AND MEMBER SIZES AS REQUIRED PRIOR TO BEGINNING CONSTRUCTION, FABRICATION, ETC.

FULLY SPRINKLERED
CONSTRUCTION DOCUMENTS

No.	Date	Revisions
1	1/14/15	Amendment #4

CONSULTANTS:

MECHANICAL/ELECTRICAL:
KJWW ENGINEERING CONSULTANTS - ST. LOUIS
#15 SUNNEN DRIVE, SUITE 104
ST. LOUIS, MO 63141

PLUMBING:
303RD ENGINEERING GROUP, LLC
1935 ARSENAL STREET
ST. LOUIS, MO 63118

ESTIMATING:
KWAME BUILDING GROUP
1204 WASHINGTON AVE. SUITE 200
ST. LOUIS, MO 63103

LIFE SAFETY/FIRE PROTECTION:
CODE CONSULTANTS, INC.
2043 WOODLAND PARKWAY, SUITE 300
ST. LOUIS, MO 63146

ACOUSTICAL ENGINEERS:
ACOUSTICONTROL LLC
1709 WASHINGTON AVENUE, LOFT 300
ST. LOUIS, MO 63103

COMMISSIONING:
ZODIAC INTERNATIONAL
16100 CHESTERFIELD PARKWAY, SUITE 365
CHESTERFIELD, MO 63017

ENVIROMENTAL:
EVIRONMENTAL CONSULTANTS, LLC
#6 MEADOW HEIGHTS PROFESSIONAL PARK DR.
COLLINSVILLE, IL
62234

STRUCTURAL ENGINEER
kpff Consulting Engineers
1630 Des Peres Road, Suite 100
Saint Louis, MO 63131
(314) 835-0524 Fax (314) 835-0749
Mo. Certificate of Authority No. 2001010829

THIS MEDIA SHOULD NOT BE CONSIDERED A CERTIFIED DOCUMENT

ARCHITECT/ENGINEERS:

CHRISTNER
ARCHITECTS | DESIGNERS | PLANNERS | LANDSCAPE ARCHITECTS
168 N MERAMEC, SUITE 400 | ST. LOUIS, MISSOURI 63105
TEL 314 725 2927 | FAX 314 725 2928 | CHRISTNERINC.COM

The Professional Engineer whose personal seal and signature Appears on this page assumes responsibility only for what appears on this page and disclaims (pursuant to Section 327.411 RSMo) any responsibility for all other pages, plans, specifications, estimates, reports, or other documents or instruments not sealed by this Professional Engineer relating to, or intended to be used for, any part or parts of the engineering project to which this page refers.

Drawing Title: SECTIONS

DIRECTOR OF SPECIALTY CARE | INFECTION CONTROL PRACTITIONER | CHIEF ENGINEER | ASSISTANT DIRECTOR | ASSOCIATE DIRECTOR OF PATIENT SERVICES | CHIEF OF STAFF | ASSOCIATE DIRECTOR | MEDICAL CENTER DIRECTOR

Project Title: INTENSIVE CARE UNIT

Project Number: 110348.01

Building Number: #1

Location: HARRY S. TRUMAN VAMC

Date	Checked	Drawn	Approved
12/30/13	JM	TJR	LDS

Drawing Number: SS 301

Dwg. 69 of 201

Office of Construction and Facilities Management

Department of Veterans Affairs

VA FORM 08-6231 PRINTED ON ORIGINAL SIZE OF SHEET IS 30" X 42"

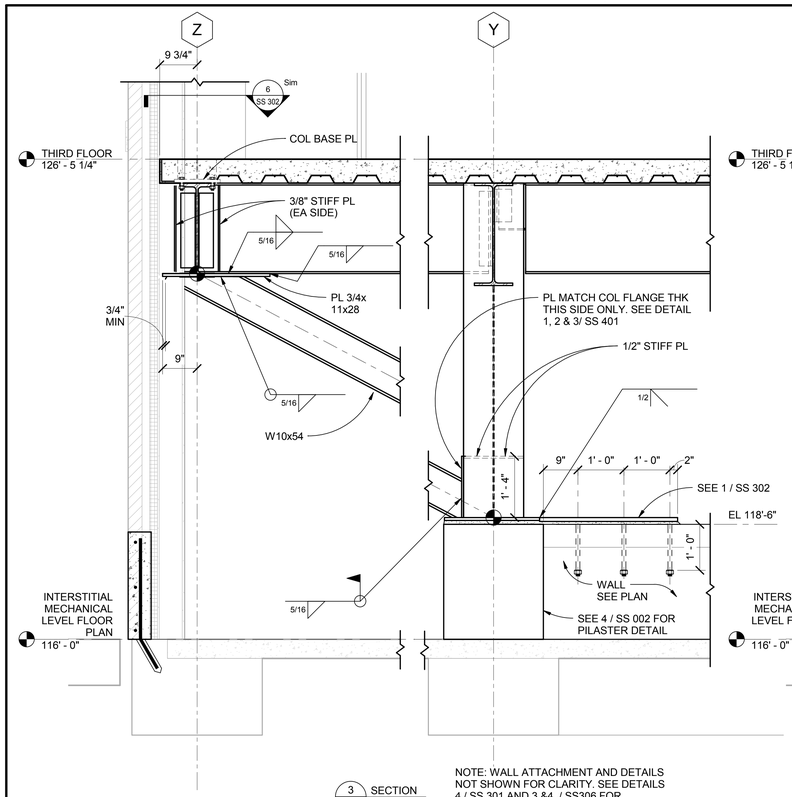

3 SS 302 SECTION 3/4" = 1'-0"

NOTE: WALL ATTACHMENT AND DETAILS NOT SHOWN FOR CLARITY. SEE DETAILS 4 / SS 301 AND 3 &4 ./ SS306 FOR ADDITIONAL INFORMATION

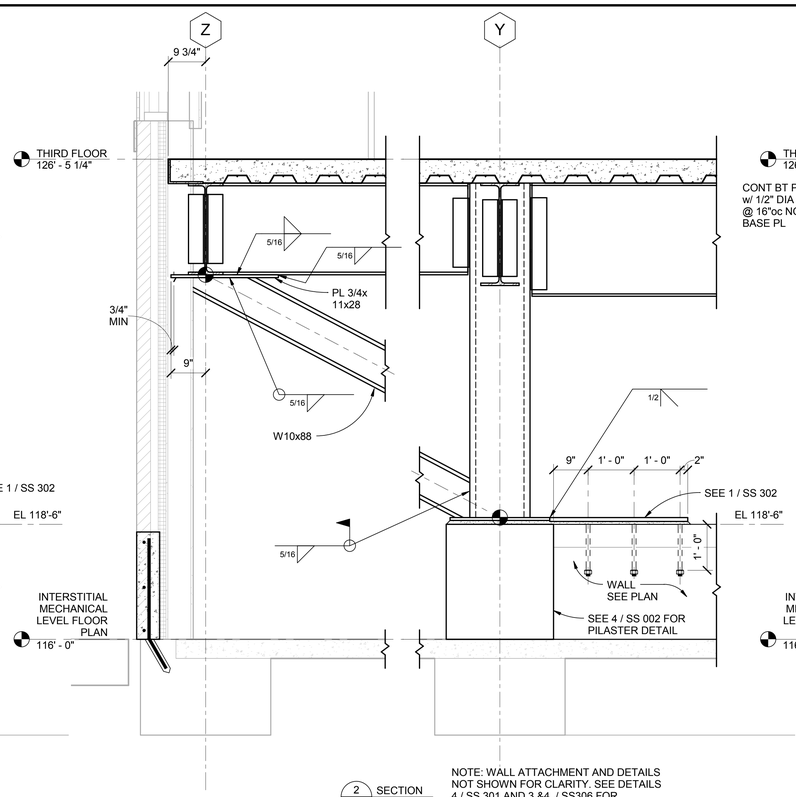

2 SS 302 SECTION 3/4" = 1'-0"

NOTE: WALL ATTACHMENT AND DETAILS NOT SHOWN FOR CLARITY. SEE DETAILS 4 / SS 301 AND 3 &4 ./ SS306 FOR ADDITIONAL INFORMATION

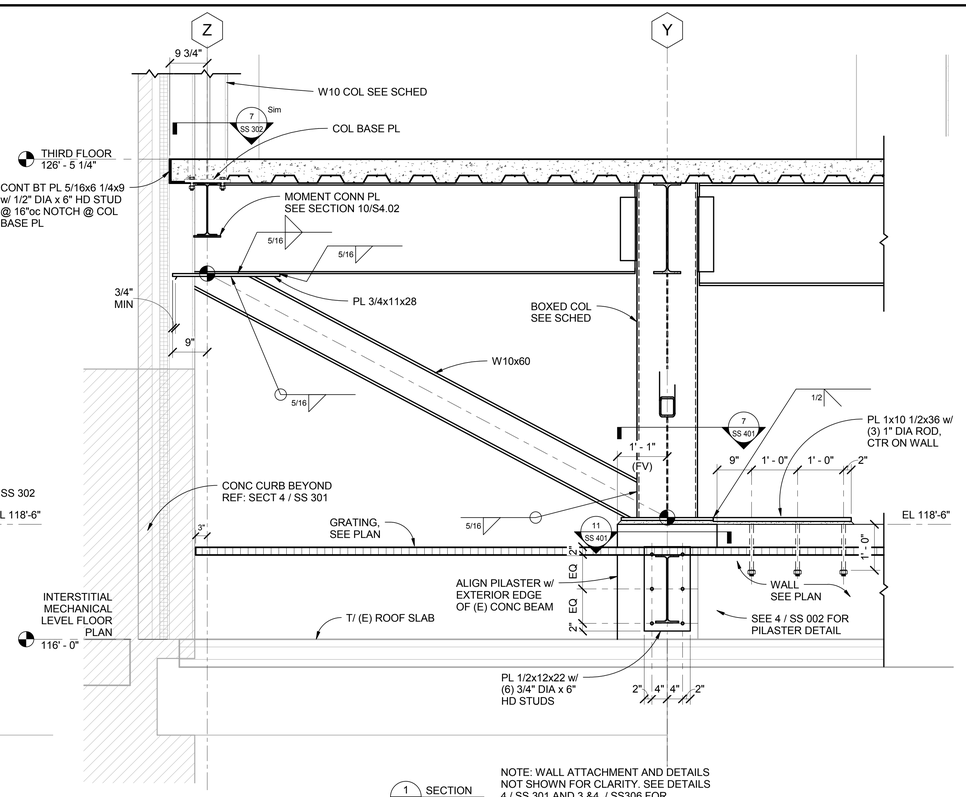

1 SS 302 SECTION 3/4" = 1'-0"

NOTE: WALL ATTACHMENT AND DETAILS NOT SHOWN FOR CLARITY. SEE DETAILS 4 / SS 301 AND 3 &4 ./ SS306 FOR ADDITIONAL INFORMATION

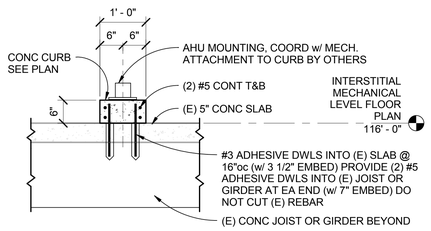

8 SS 302 SECTION 3/4" = 1'-0"

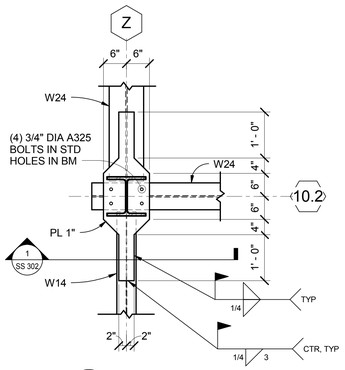

7 SS 302 BASE PLATE DETAIL 3/4" = 1'-0"

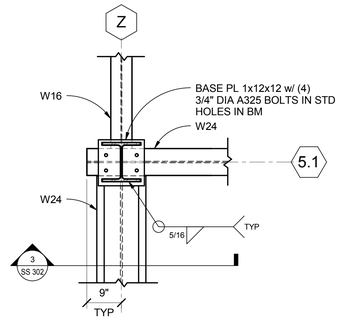

6 SS 302 BASE PLATE DETAIL 3/4" = 1'-0"

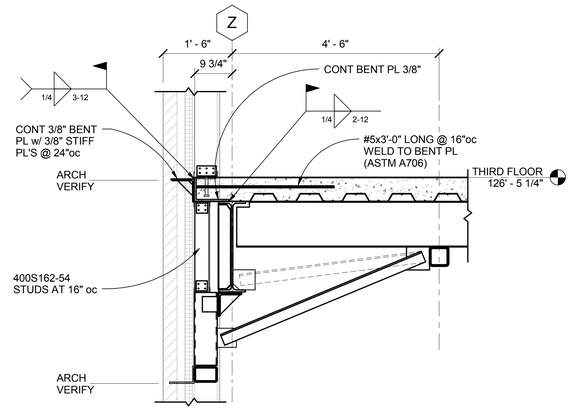

5 SS 302 SECTION 3/4" = 1'-0"

NOTE: SEE SECTION 1 / SS 307 FOR BALANCE OF INFORMATION

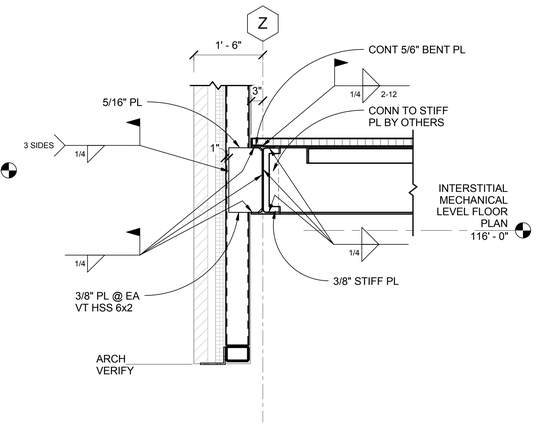

4 SS 302 SECTION 3/4" = 1'-0"

NOTE: SEE SECTION 3 / SS 307 FOR BALANCE OF INFORMATION

THE DIMENSIONS AND ELEVATIONS SHOWN FOR THE EXISTING CONSTRUCTION ARE ***NOT*** AS-BUILT DIMENSIONS BUT WERE OBTAINED FROM OTHER DRAWINGS AND DOCUMENTS. IT IS THE RESPONSIBILITY OF THE CONTRACTOR TO ***FIELD VERIFY*** ALL DIMENSIONS, ELEVATIONS, AND MEMBER SIZES AS REQUIRED PRIOR TO BEGINNING CONSTRUCTION, FABRICATION, ETC.

FULLY SPRINKLERED
CONSTRUCTION DOCUMENTS

No.	Date	Revisions

CONSULTANTS:

MECHANICAL/ELECTRICAL:
KJWW ENGINEERING CONSULTANTS - ST. LOUIS
#15 SUNNEN DRIVE, SUITE 104
ST. LOUIS, MO 63141

PLUMBING:
303RD ENGINEERING GROUP, LLC
1935 ARSENAL STREET
ST. LOUIS, MO 63118

ESTIMATING:
KWAME BUILDING GROUP
1204 WASHINGTON AVE. SUITE 200
ST. LOUIS, MO 63103

LIFE SAFETY/FIRE PROTECTION:
CODE CONSULTANTS, INC.
2043 WOODLAND PARKWAY, SUITE 300
ST. LOUIS, MO 63146

ACOUSTICAL ENGINEERS:
ACOUSTICONTROL LLC
1709 WASHINGTON AVENUE, LOFT 300
ST. LOUIS, MO 63103

COMMISSIONING:
ZODIAC INTERNATIONAL
16100 CHESTERFIELD PARKWAY, SUITE 365
CHESTERFIELD, MO 63017

ENVIROMENTAL:
EVIRONMENTAL CONSULTANTS, LLC
#6 MEADOW HEIGHTS PROFESSIONAL PARK DR.
COLLINSVILLE, IL
62234

STRUCTURAL ENGINEER
kpff Consulting Engineers
1630 Des Peres Road, Suite 100
Saint Louis, MO 63131
(314) 835-0524 Fax (314) 835-0749
Mo. Certificate of Authority No. 2001010829

THIS MEDIA SHOULD NOT BE CONSIDERED A CERTIFIED DOCUMENT

ARCHITECT/ENGINEERS:

CHRISTNER
ARCHITECTS | DESIGNERS | PLANNERS | LANDSCAPE ARCHITECTS
168 N MERAMEC, SUITE 400 | ST. LOUIS, MISSOURI 63105
TEL 314 725 2927 | FAX 314 725 2928 | CHRISTNERINC.COM

The Professional Engineer whose personal seal and signature Appears on this page assumes responsibility only for what appears on this page and disclaims (pursuant to Section 327.411 RSMo) any responsibility for all other pages, plans, specifications, estimates, reports, or other documents or instruments not sealed by this Professional Engineer relating to, or intended to be used for, any part or parts of the engineering project to which this page refers.

Drawing Title: SECTIONS

DIRECTOR OF SPECIALTY CARE	INFECTION CONTROL PRACITIONER	CHIEF ENGINEER	ASSISTANT DIRECTOR	ASSOCIATE DIRECTOR OF INTERN SERVICES	CHIEF OF STAFF	ASSOCIATE DIRECTOR	MEDICAL CENTER DIRECTOR

Project Title: INTENSIVE CARE UNIT

Project Number: 110348.01

Building Number: #1

Location: HARRY S. TRUMAN VAMC

Date	Checked	Drawn	Approved
12/30/13	JM	TJR	LDS

Drawing Number: SS 302

Dwg. 70 of 201

Office of Construction and Facilities Management

Department of Veterans Affairs

VA FORM 08-6231 PRINTED ON ORIGINAL SIZE OF SHEET IS 30" X 42"

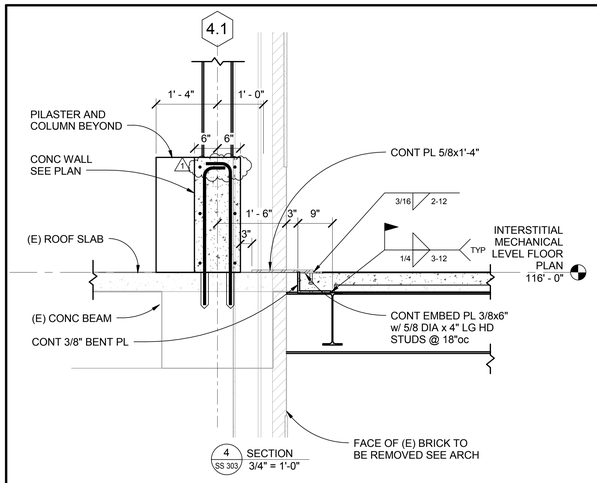

4 SS 303 SECTION 3/4" = 1'-0"

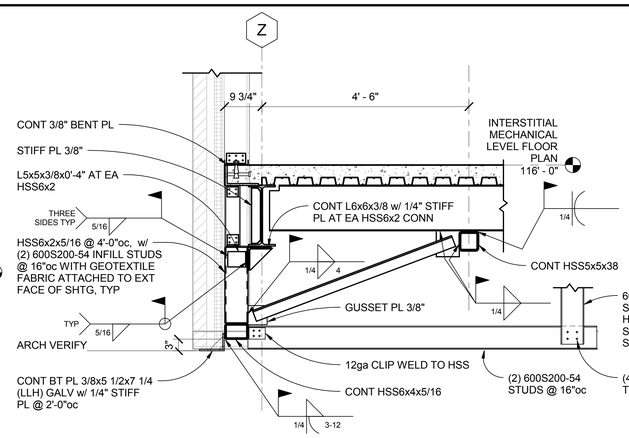

3 SS 303 SECTION 3/4" = 1'-0"

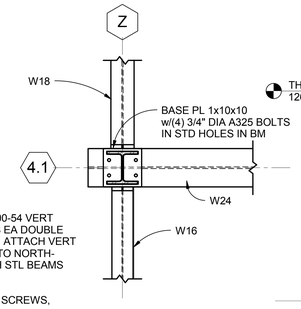

2 SS 303 BASE PLATE DETAIL 3/4" = 1'-0"

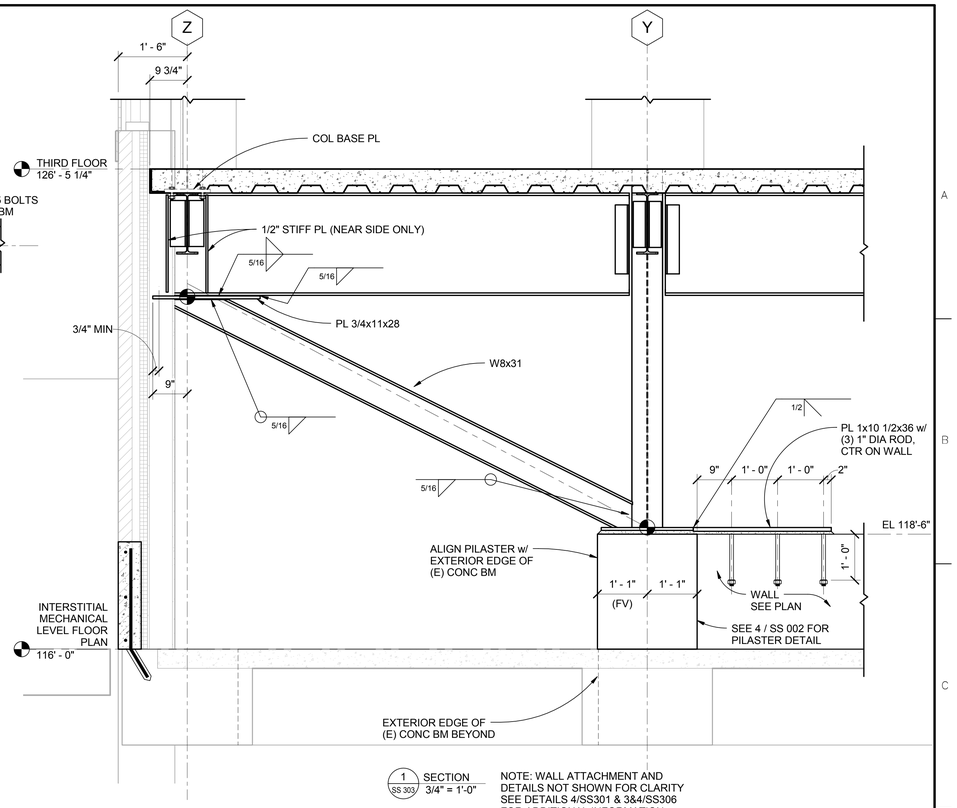

1 SS 303 SECTION 3/4" = 1'-0"

NOTE: WALL ATTACHMENT AND DETAILS NOT SHOWN FOR CLARITY SEE DETAILS 4/SS301 & 3&4/SS306 FOR ADDITIONAL INFORMATION

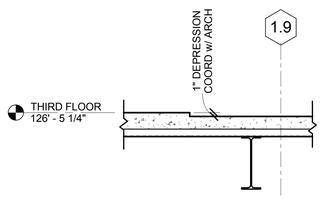

7 SS 303 SECTION 3/4" = 1'-0"

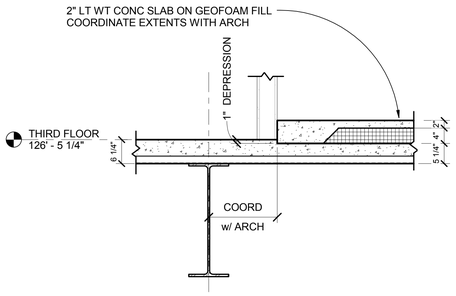

6 SS 303 SECTION 3/4" = 1'-0"

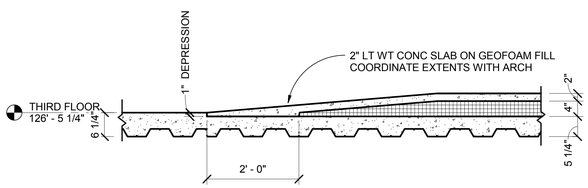

5 SS 303 SECTION 3/4" = 1'-0"

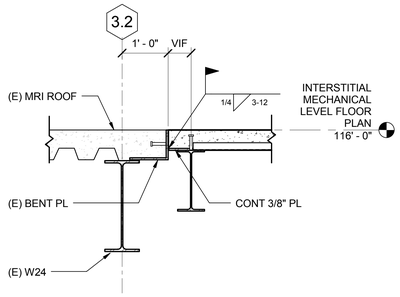

9 SS 303 SECTION 3/4" = 1'-0"

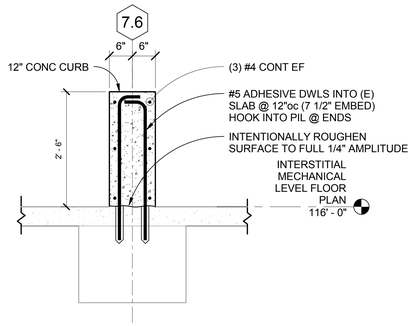

8 SS 303 SECTION 3/4" = 1'-0"

THE DIMENSIONS AND ELEVATIONS SHOWN FOR THE EXISTING CONSTRUCTION ARE ***NOT*** AS-BUILT DIMENSIONS BUT WERE OBTAINED FROM OTHER DRAWINGS AND DOCUMENTS. IT IS THE RESPONSIBILITY OF THE CONTRACTOR TO ***FIELD VERIFY*** ALL DIMENSIONS, ELEVATIONS, AND MEMBER SIZES AS REQUIRED PRIOR TO BEGINNING CONSTRUCTION, FABRICATION, ETC.

FULLY SPRINKLERED
CONSTRUCTION DOCUMENTS

No.	Date	Revisions
1	1/14/15	Amendment #4

CONSULTANTS:

MECHANICAL/ELECTRICAL:
KJWW ENGINEERING CONSULTANTS - ST. LOUIS
#15 SUNNEN DRIVE, SUITE 104
ST. LOUIS, MO 63141

PLUMBING:
303RD ENGINEERING GROUP, LLC
1935 ARSENAL STREET
ST. LOUIS, MO 63118

ESTIMATING:
KWAME BUILDING GROUP
1204 WASHINGTON AVE. SUITE 200
ST. LOUIS, MO 63103

LIFE SAFETY/FIRE PROTECTION:
CODE CONSULTANTS, INC.
2043 WOODLAND PARKWAY, SUITE 300
ST. LOUIS, MO 63146

ACOUSTICAL ENGINEERS:
ACOUSTICONTROL LLC
1709 WASHINGTON AVENUE, LOFT 300
ST. LOUIS, MO 63103

COMMISSIONING:
ZODIAC INTERNATIONAL
16100 CHESTERFIELD PARKWAY, SUITE 365
CHESTERFIELD, MO 63017

ENVIROMENTAL:
EVIRONMENTAL CONSULTANTS, LLC
#6 MEADOW HEIGHTS PROFESSIONAL PARK DR.
COLLINSVILLE, IL
62234

STRUCTURAL ENGINEER
kpff Consulting Engineers
1630 Des Peres Road, Suite 100
Saint Louis, MO 63131
(314) 835-0524 Fax (314) 835-0749
Mo. Certificate of Authority No. 2001010829

THIS MEDIA SHOULD NOT BE CONSIDERED A CERTIFIED DOCUMENT

ARCHITECT/ENGINEERS:

CHRISTNER
ARCHITECTS | DESIGNERS | PLANNERS | LANDSCAPE ARCHITECTS
168 N MERAMEC, SUITE 400 | ST. LOUIS, MISSOURI 63105
TEL 314 725 2927 | FAX 314 725 2928 | CHRISTNERINC.COM

The Professional Engineer whose personal seal and signature Appears on this page assumes responsibility only for what appears on this page and disclaims (pursuant to Section 327.411 RSMo) any responsibility for all other pages, plans, specifications, estimates, reports, or other documents or instruments not sealed by this Professional Engineer relating to, or intended to be used for, any part or parts of the engineering project to which this page refers.

DIRECTOR OF SPECIALTY CARE	INFECTION CONTROL PRACTITIONER	CHIEF ENGINEER	ASSISTANT DIRECTOR	ASSOCIATE DIRECTOR OF PATIENT SERVICES	CHIEF OF STAFF	ASSOCIATE DIRECTOR	MEDICAL CENTER DIRECTOR

Drawing Title: SECTIONS
Project Title: INTENSIVE CARE UNIT
Project Number: 110348.01
Building Number: #1
Location: HARRY S. TRUMAN VAMC
Drawing Number: SS 303
Dwg. 71 of 201

Date	Checked	Drawn	Approved
12/30/13	JM	AIS	LDS

Office of Construction and Facilities Management
Department of Veterans Affairs

VA FORM 08-6231 PRINTED ON ORIGINAL SIZE OF SHEET IS 30" X 42"

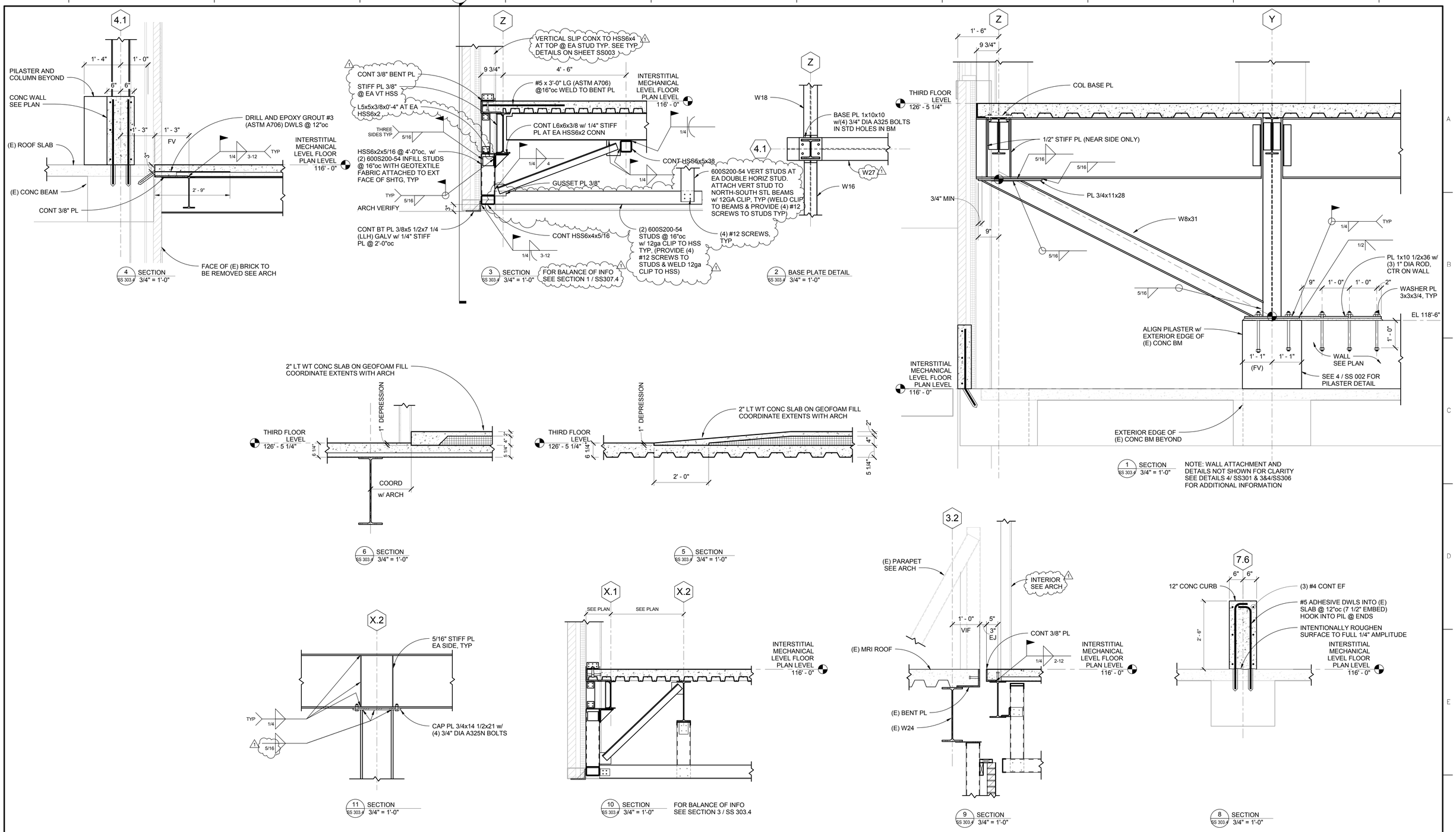

THE DIMENSIONS AND ELEVATIONS SHOWN FOR THE EXISTING CONSTRUCTION ARE ***NOT*** AS-BUILT DIMENSIONS BUT WERE OBTAINED FROM OTHER DRAWINGS AND DOCUMENTS. IT IS THE RESPONSIBILITY OF THE CONTRACTOR TO ***FIELD VERIFY*** ALL DIMENSIONS, ELEVATIONS, AND MEMBER SIZES AS REQUIRED PRIOR TO BEGINNING CONSTRUCTION, FABRICATION, ETC.

FULLY SPRINKLERED
CONSTRUCTION DOCUMENTS

No.	Date	Revisions
1	1/14/15	Amendment #4

CONSULTANTS:

MECHANICAL/ELECTRICAL:
KJWW ENGINEERING CONSULTANTS - ST. LOUIS
#15 SUNNEN DRIVE, SUITE 104
ST. LOUIS, MO 63141

PLUMBING:
303RD ENGINEERING GROUP, LLC
1935 ARSENAL STREET
ST. LOUIS, MO 63118

ESTIMATING:
KWAME BUILDING GROUP
1204 WASHINGTON AVE. SUITE 200
ST. LOUIS, MO 63103

LIFE SAFETY/FIRE PROTECTION:
CODE CONSULTANTS, INC.
2043 WOODLAND PARKWAY, SUITE 300
ST. LOUIS, MO 63146

ACOUSTICAL ENGINEERS:
ACOUSTICONTROL LLC
1709 WASHINGTON AVENUE, LOFT 300
ST. LOUIS, MO 63103

COMMISSIONING:
ZODIAC INTERNATIONAL
16100 CHESTERFIELD PARKWAY, SUITE 365
CHESTERFIELD, MO 63017

ENVIROMENTAL:
EVIRONMENTAL CONSULTANTS, LLC
#6 MEADOW HEIGHTS PROFESSIONAL PARK DR.
COLLINSVILLE, IL
62234

STRUCTURAL ENGINEER
kpff Consulting Engineers
1630 Des Peres Road, Suite 100
Saint Louis, MO 63131
(314) 835-0524 Fax (314) 835-0749
Mo. Certificate of Authority No. 2001010829

THIS MEDIA SHOULD NOT BE CONSIDERED A CERTIFIED DOCUMENT

ARCHITECT/ENGINEERS:

CHRISTNER
ARCHITECTS | DESIGNERS | PLANNERS | LANDSCAPE ARCHITECTS
168 N MERAMEC, SUITE 400 | ST. LOUIS, MISSOURI 63105
TEL 314 725 2927 | FAX 314 725 2928 | CHRISTNERINC.COM

The Professional Engineer whose personal seal and signature Appears on this page assumes responsibility only for what appears on this page and disclaims (pursuant to Section 327.411 RSMo) any responsibility for all other pages, plans, specifications, estimates, reports, or other documents or instruments not sealed by this Professional Engineer relating to, or intended to be used for, any part or parts of the engineering project to which this page refers.

DIRECTOR OF SPECIALTY CARE	INFECTION CONTROL PRACTITIONER	CHIEF ENGINEER	ASSISTANT DIRECTOR	ASSOCIATE DIRECTOR OF PATIENT SERVICES	CHIEF OF STAFF	ASSOCIATE DIRECTOR	MEDICAL CENTER DIRECTOR

Drawing Title: SECTIONS DEDUCT ALTERNATES 4,5

Project Title: INTENSIVE CARE UNIT

Project Number: 110348.01

Building Number: #1

Location: HARRY S. TRUMAN VAMC

Date	Checked	Drawn	Approved
9/4/14	JM	AIS	LDS

Drawing Number: SS 303.4

Dwg.108 of 201

Office of Construction and Facilities Management

Department of Veterans Affairs

VA FORM 08-6231 PRINTED ON ORIGINAL SIZE OF SHEET IS 30" X 42"

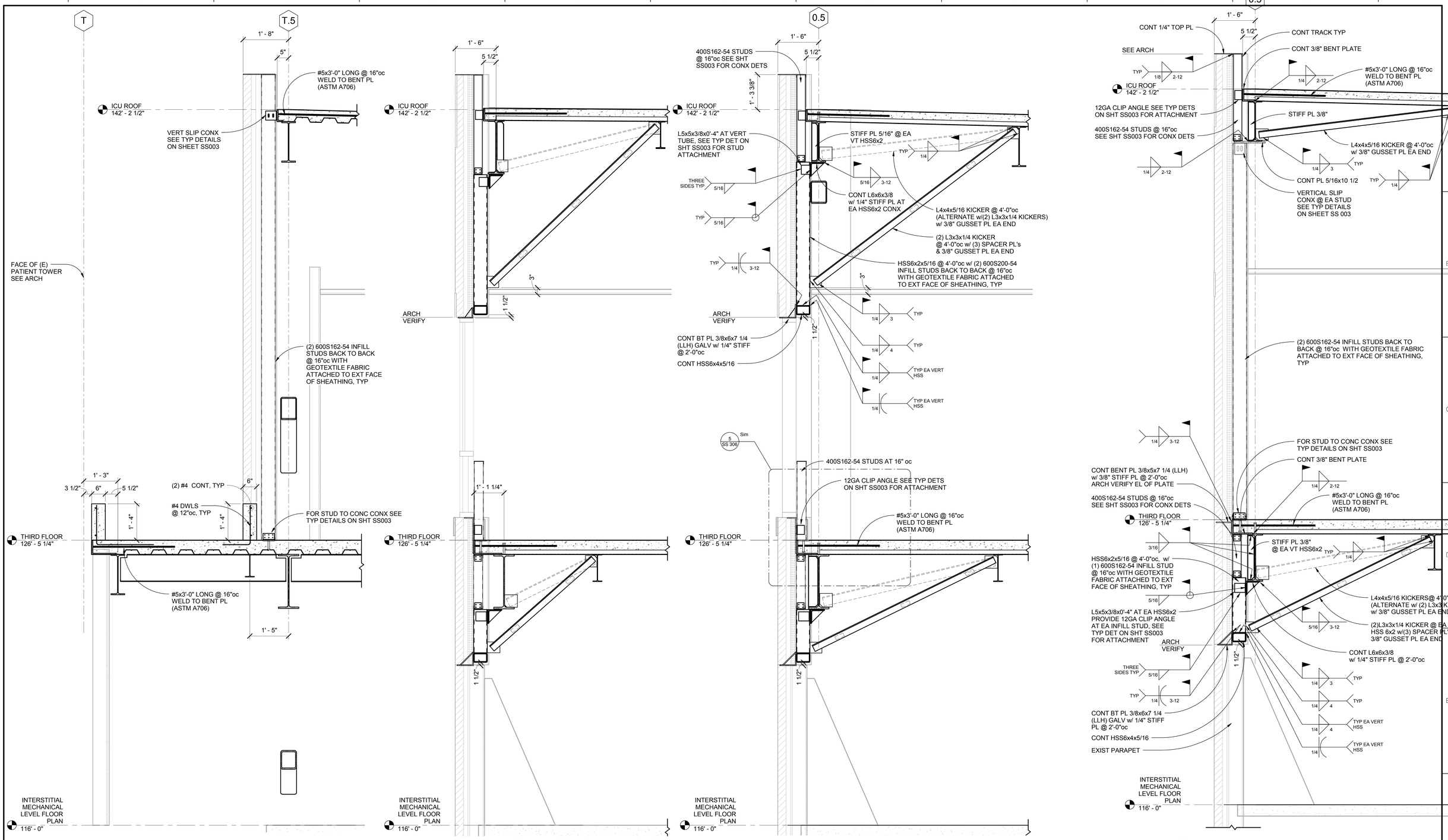

4 SS 304 SECTION 3/4" = 1'-0" — FOR BALANCE OF INFORMATION SEE SECTION 3/SS305

3 SS 304 SECTION 3/4" = 1'-0" — FOR BALANCE OF INFORMATION SEE SECTION 1 & 2/SS304

2 SS 304 SECTION 3/4" = 1'-0" — FOR BALANCE OF INFORMATION SEE SECTION 1/SS304

1 SS 304 SECTION 3/4" = 1'-0"

FULLY SPRINKLERED CONSTRUCTION DOCUMENTS

No.	Date	Revisions

CONSULTANTS:

MECHANICAL/ELECTRICAL:
KJWW ENGINEERING CONSULTANTS - ST. LOUIS
#15 SUNNEN DRIVE, SUITE 104
ST. LOUIS, MO 63141

PLUMBING:
303RD ENGINEERING GROUP, LLC
1935 ARSENAL STREET
ST. LOUIS, MO 63118

ESTIMATING:
KWAME BUILDING GROUP
1204 WASHINGTON AVE. SUITE 200
ST. LOUIS, MO 63103

LIFE SAFETY/FIRE PROTECTION:
CODE CONSULTANTS, INC.
2043 WOODLAND PARKWAY, SUITE 300
ST. LOUIS, MO 63146

ACOUSTICAL ENGINEERS:
ACOUSTICONTROL LLC
1709 WASHINGTON AVENUE, LOFT 300
ST. LOUIS, MO 63103

COMMISSIONING:
ZODIAC INTERNATIONAL
16100 CHESTERFIELD PARKWAY, SUITE 365
CHESTERFIELD, MO 63017

ENVIROMENTAL:
EVIRONMENTAL CONSULTANTS, LLC
#6 MEADOW HEIGHTS PROFESSIONAL PARK DR.
COLLINSVILLE, IL
62234

STRUCTURAL ENGINEER
kpff Consulting Engineers
1630 Des Peres Road, Suite 100
Saint Louis, MO 63131
(314) 835-0824 Fax (314) 835-0749
Mo. Certificate of Authority No. 2001010829

THIS MEDIA SHOULD NOT BE CONSIDERED A CERTIFIED DOCUMENT

ARCHITECT/ENGINEERS:

CHRISTNER
ARCHITECTS | DESIGNERS | PLANNERS | LANDSCAPE ARCHITECTS
168 N MERAMEC, SUITE 400 | ST. LOUIS, MISSOURI 63105
TEL 314 725 2927 | FAX 314 725 2928 | CHRISTNERINC.COM

The Professional Engineer whose personal seal and signature Appears on this page assumes responsibility only for what appears on this page and disclaims (pursuant to Section 327.411 RSMo) any responsibility for all other pages, plans, specifications, estimates, reports, or other documents or instruments not sealed by this Professional Engineer relating to, or intended to be used for, any part or parts of the engineering project to which this page refers.

DIRECTOR OF SPECIALTY CARE	INFECTION CONTROL PRACTITIONER	CHIEF ENGINEER	ASSISTANT DIRECTOR	ASSOCIATE DIRECTOR OF PATIENT SERVICES	CHIEF OF STAFF	ASSOCIATE DIRECTOR	MEDICAL CENTER DIRECTOR

Drawing Title: SECTIONS

Project Title: INTENSIVE CARE UNIT

Project Number: 110348.01

Building Number: #1

Location: HARRY S. TRUMAN VAMC

Date	Checked	Drawn	Approved
12/30/13	JM	TJR	LDS

Drawing Number: SS 304

Dwg. 72 of 201

Office of Construction and Facilities Management

Department of Veterans Affairs

VA FORM 08-6231 PRINTED ON ORIGINAL SIZE OF SHEET IS 30" X 42"

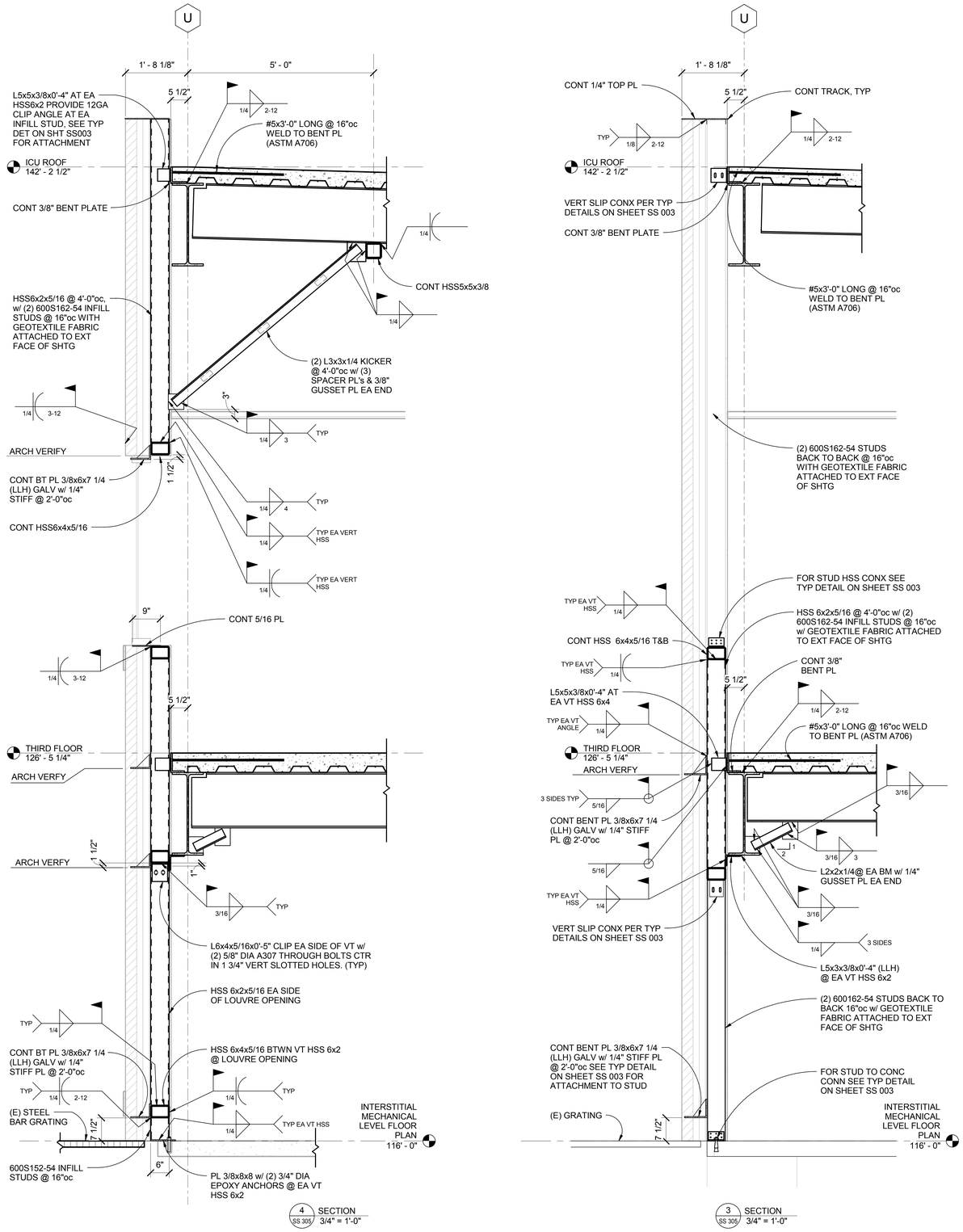

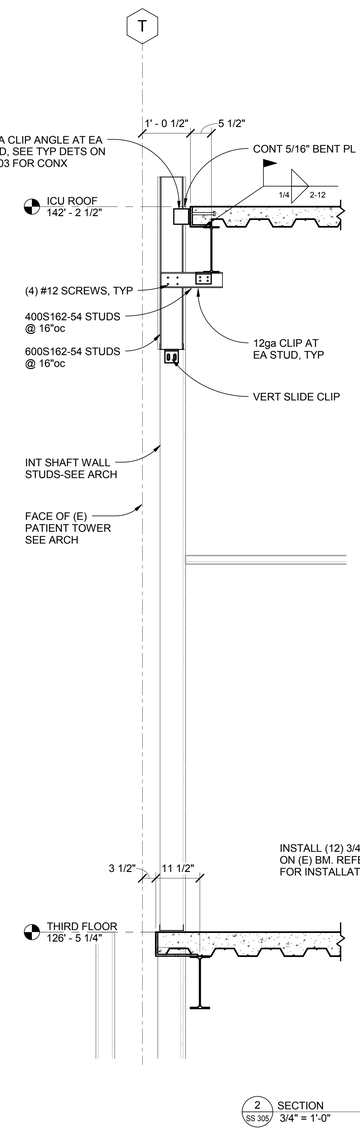

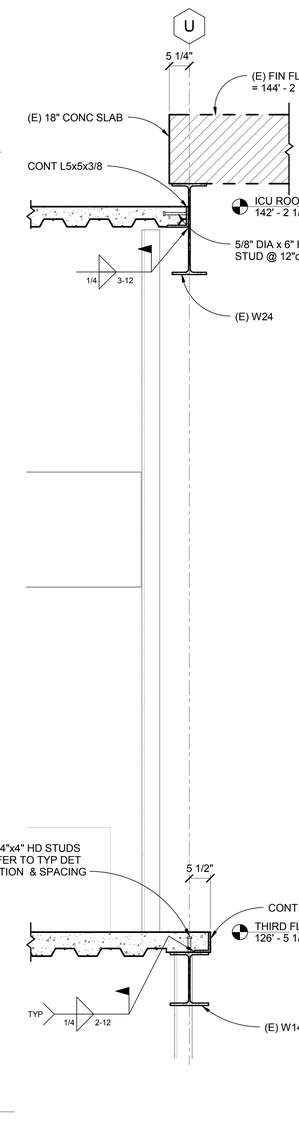

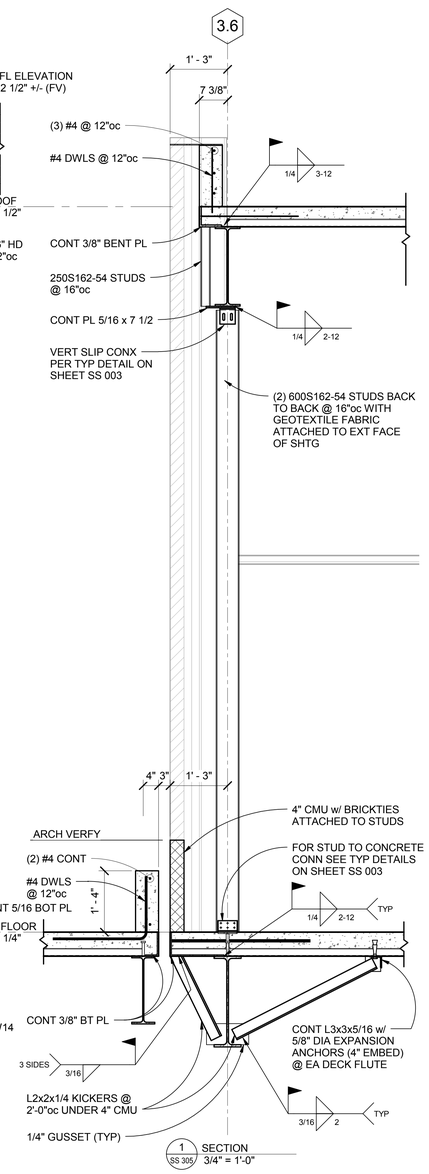

THE DIMENSIONS AND ELEVATIONS SHOWN FOR THE EXISTING CONSTRUCTION ARE ***NOT*** AS-BUILT DIMENSIONS BUT WERE OBTAINED FROM OTHER DRAWINGS AND DOCUMENTS. IT IS THE RESPONSIBILITY OF THE CONTRACTOR TO ***FIELD VERIFY*** ALL DIMENSIONS, ELEVATIONS, AND MEMBER SIZES AS REQUIRED PRIOR TO BEGINNING CONSTRUCTION, FABRICATION, ETC.

FULLY SPRINKLERED
CONSTRUCTION DOCUMENTS

No.	Date	Revisions

CONSULTANTS:

MECHANICAL/ELECTRICAL:
KJWW ENGINEERING CONSULTANTS - ST. LOUIS
#15 SUNNEN DRIVE, SUITE 104
ST. LOUIS, MO 63141

PLUMBING:
303RD ENGINEERING GROUP, LLC
1935 ARSENAL STREET
ST. LOUIS, MO 63118

ESTIMATING:
KWAME BUILDING GROUP
1204 WASHINGTON AVE. SUITE 200
ST. LOUIS, MO 63103

LIFE SAFETY/FIRE PROTECTION:
CODE CONSULTANTS, INC.
2043 WOODLAND PARKWAY, SUITE 300
ST. LOUIS, MO 63146

ACOUSTICAL ENGINEERS:
ACOUSTICONTROL LLC
1709 WASHINGTON AVENUE, LOFT 300
ST. LOUIS, MO 63103

COMMISSIONING:
ZODIAC INTERNATIONAL
16100 CHESTERFIELD PARKWAY, SUITE 365
CHESTERFIELD, MO 63017

ENVIROMENTAL:
EVIRONMENTAL CONSULTANTS, LLC
#6 MEADOW HEIGHTS PROFESSIONAL PARK DR.
COLLINSVILLE, IL
62234

STRUCTURAL ENGINEER
kpff Consulting Engineers
1630 Des Peres Road, Suite 100
Saint Louis, MO 63131
(314) 835-0824 Fax (314) 835-0749
Mo. Certificate of Authority No. 2001010829

THIS MEDIA SHOULD NOT BE CONSIDERED A CERTIFIED DOCUMENT

ARCHITECT/ENGINEERS:

CHRISTNER
ARCHITECTS | DESIGNERS | PLANNERS | LANDSCAPE ARCHITECTS
168 N MERAMEC, SUITE 400 | ST. LOUIS, MISSOURI 63105
TEL 314 725 2927 | FAX 314 725 2928 | CHRISTNERINC.COM

The Professional Engineer whose personal seal and signature Appears on this page assumes responsibility only for what appears on this page and disclaims (pursuant to Section 327.411 RSMo) any responsibility for all other pages, plans, specifications, estimates, reports, or other documents or instruments not sealed by this Professional Engineer relating to, or intended to be used for, any part or parts of the engineering project to which this page refers.

DIRECTOR OF SPECIALTY CARE	INFECTION CONTROL PRACTITIONER	CHIEF ENGINEER	ASSISTANT DIRECTOR	ASSOCIATE DIRECTOR OF PATIENT SERVICES	CHIEF OF STAFF	ASSOCIATE DIRECTOR	MEDICAL CENTER DIRECTOR

Drawing Title: SECTIONS

Project Title: INTENSIVE CARE UNIT

Project Number: 110348.01

Building Number: #1

Location: HARRY S. TRUMAN VAMC

Date	Checked	Drawn	Approved
12/30/13	JM	TJR	LDS

Drawing Number: SS 305

Dwg. 73 of 201

Office of Construction and Facilities Management

Department of Veterans Affairs

VA FORM 08-6231 PRINTED ON ORIGINAL SIZE OF SHEET IS 30" X 42"

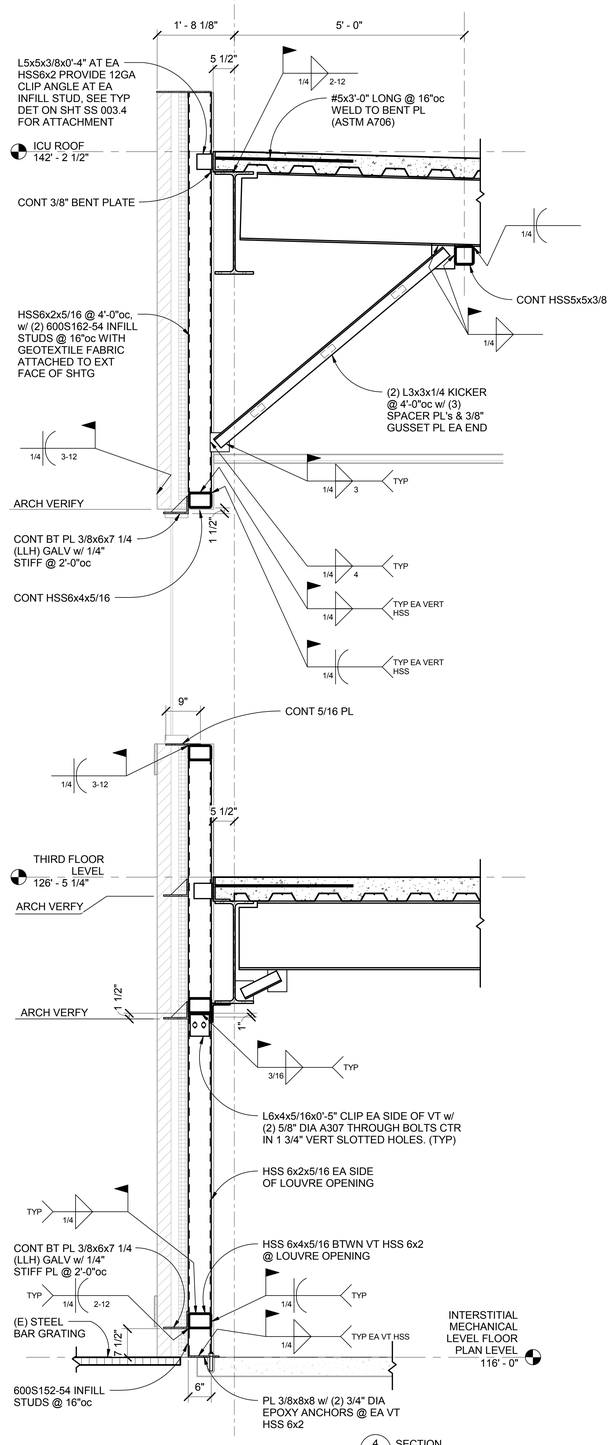

4 SS 305.4 SECTION 3/4" = 1'-0"

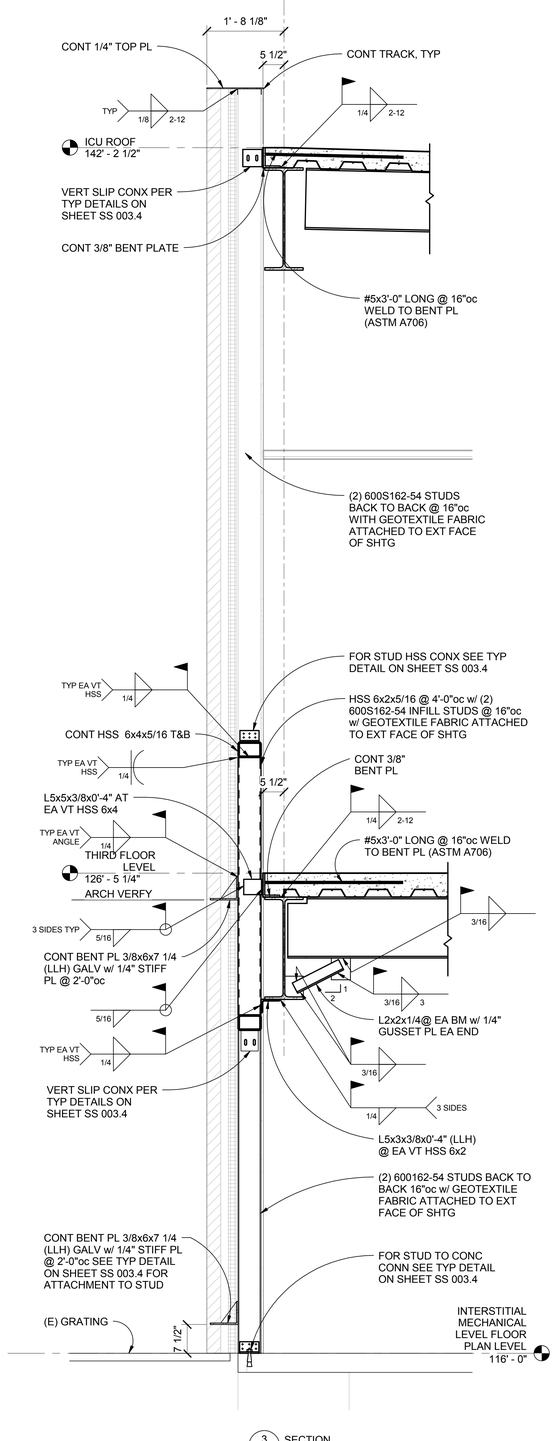

3 SS 305.4 SECTION 3/4" = 1'-0"

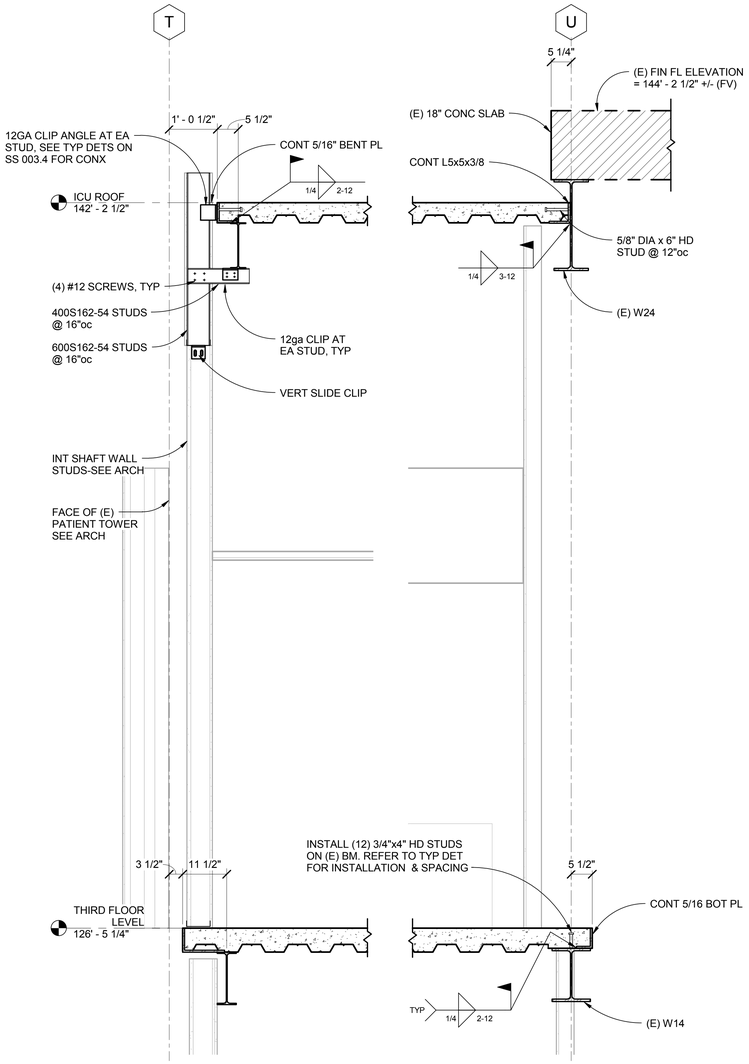

2 SS 305.4 SECTION 3/4" = 1'-0"

NOT USED

1 SS 305.4 SECTION 3/4" = 1'-0"

THE DIMENSIONS AND ELEVATIONS SHOWN FOR THE EXISTING CONSTRUCTION ARE ***NOT*** AS-BUILT DIMENSIONS BUT WERE OBTAINED FROM OTHER DRAWINGS AND DOCUMENTS. IT IS THE RESPONSIBILITY OF THE CONTRACTOR TO ***FIELD VERIFY*** ALL DIMENSIONS, ELEVATIONS, AND MEMBER SIZES AS REQUIRED PRIOR TO BEGINNING CONSTRUCTION, FABRICATION, ETC.

FULLY SPRINKLERED
CONSTRUCTION DOCUMENTS

No.	Date	Revisions
1	1/14/15	Amendment #4

CONSULTANTS:

MECHANICAL/ELECTRICAL:
KJWW ENGINEERING CONSULTANTS - ST. LOUIS
#15 SUNNEN DRIVE, SUITE 104
ST. LOUIS, MO 63141

PLUMBING:
303RD ENGINEERING GROUP, LLC
1935 ARSENAL STREET
ST. LOUIS, MO 63118

ESTIMATING:
KWAME BUILDING GROUP
1204 WASHINGTON AVE. SUITE 200
ST. LOUIS, MO 63103

LIFE SAFETY/FIRE PROTECTION:
CODE CONSULTANTS, INC.
2043 WOODLAND PARKWAY, SUITE 300
ST. LOUIS, MO 63146

ACOUSTICAL ENGINEERS:
ACOUSTICONTROL LLC
1709 WASHINGTON AVENUE, LOFT 300
ST. LOUIS, MO 63103

COMMISSIONING:
ZODIAC INTERNATIONAL
16100 CHESTERFIELD PARKWAY, SUITE 365
CHESTERFIELD, MO 63017

ENVIROMENTAL:
EVIRONMENTAL CONSULTANTS, LLC
#6 MEADOW HEIGHTS PROFESSIONAL PARK DR.
COLLINSVILLE, IL
62234

STRUCTURAL ENGINEER
kpff Consulting Engineers
1630 Des Peres Road, Suite 100
Saint Louis, MO 63131
(314) 835-0524 Fax (314) 835-0749
Mo. Certificate of Authority No. 2001010829

THIS MEDIA SHOULD NOT BE CONSIDERED A CERTIFIED DOCUMENT

ARCHITECT/ENGINEERS:

CHRISTNER
ARCHITECTS | DESIGNERS | PLANNERS | LANDSCAPE ARCHITECTS
168 N MERAMEC, SUITE 400 | ST. LOUIS, MISSOURI 63105
TEL 314 725 2927 | FAX 314 725 2928 | CHRISTNERINC.COM

The Professional Engineer whose personal seal and signature Appears on this page assumes responsibility only for what appears on this page and disclaims (pursuant to Section 327.411 RSMo) any responsibility for all other pages, plans, specifications, estimates, reports, or other documents or instruments not sealed by this Professional Engineer relating to, or intended to be used for, any part or parts of the engineering project to which this page refers.

DIRECTOR OF SPECIALTY CARE	INFECTION CONTROL PRACTITIONER	CHIEF ENGINEER	ASSISTANT DIRECTOR	ASSOCIATE DIRECTOR OF PATIENT SERVICES	CHIEF OF STAFF	ASSOCIATE DIRECTOR	MEDICAL CENTER DIRECTOR

Drawing Title: SECTIONS DEDUCT ALTERNATES 4,5

Project Title: INTENSIVE CARE UNIT

Project Number: 110348.01

Building Number: #1

Location: HARRY S. TRUMAN VAMC

Date	Checked	Drawn	Approved
9/4/14	JM	TJR	LDS

Drawing Number: SS 305.4

Dwg.109 of 201

Office of Construction and Facilities Management

Department of Veterans Affairs

VA FORM 08-6231 PRINTED ON ORIGINAL SIZE OF SHEET IS 30" X 42"

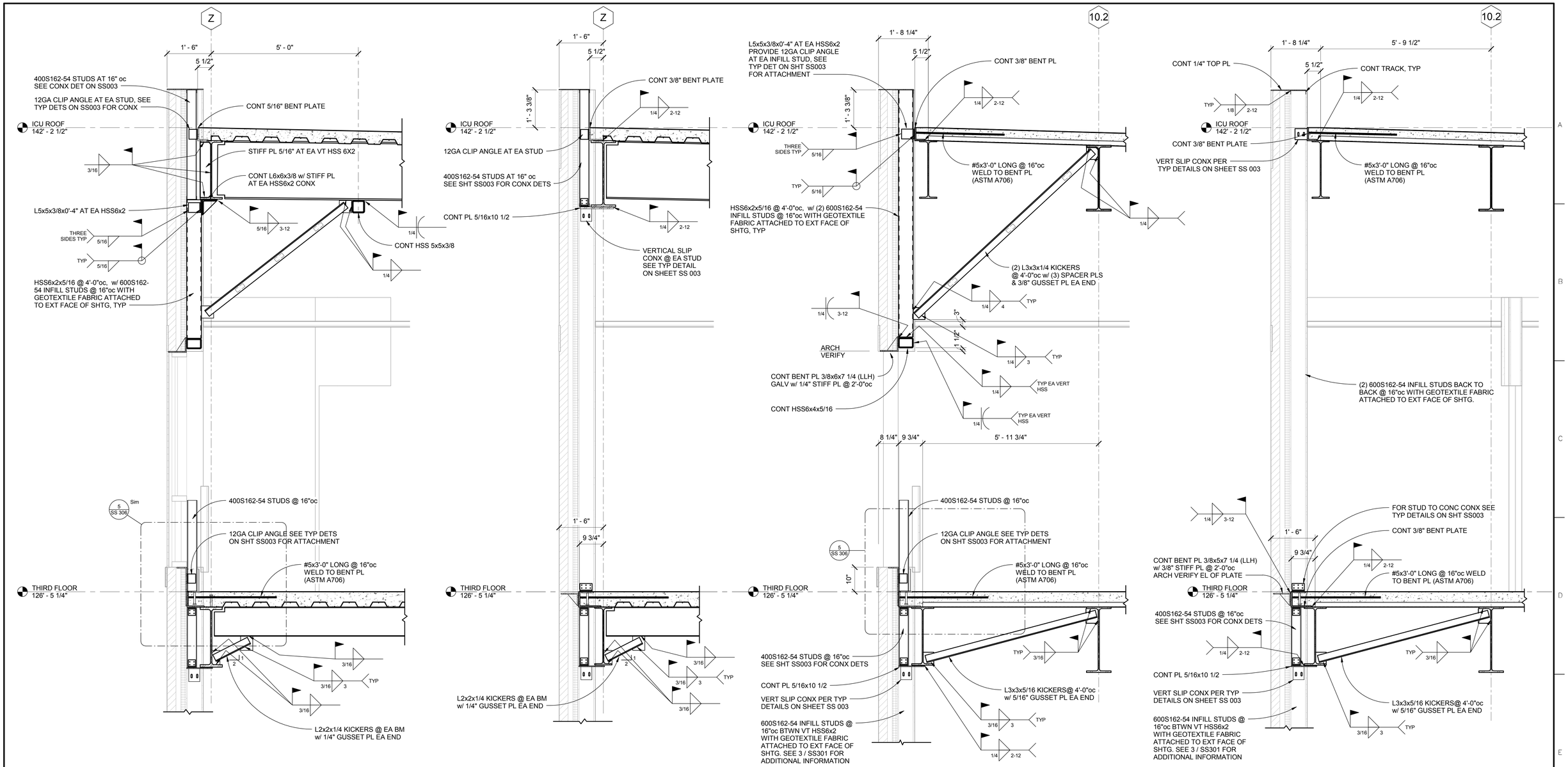

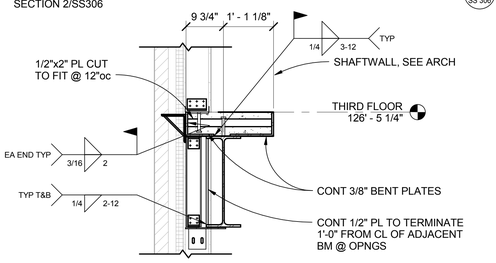

6 SS 306 SECTION 3/4" = 1'-0"

FOR BALANCE OF INFORMATION SEE SECTION 1/SS306

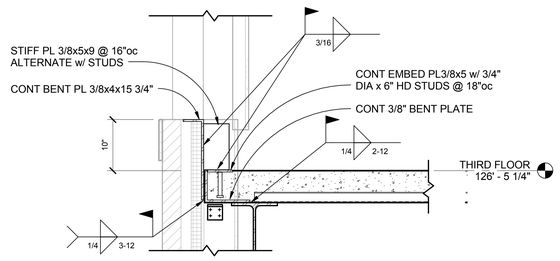

5 SS 306 PLATE DETAIL 1" = 1'-0"

FULLY SPRINKLERED
CONSTRUCTION DOCUMENTS

No.	Date	Revisions

CONSULTANTS:

MECHANICAL/ELECTRICAL:
KJWW ENGINEERING CONSULTANTS - ST. LOUIS
#15 SUNNEN DRIVE, SUITE 104
ST. LOUIS, MO 63141

PLUMBING:
303RD ENGINEERING GROUP, LLC
1935 ARSENAL STREET
ST. LOUIS, MO 63118

ESTIMATING:
KWAME BUILDING GROUP
1204 WASHINGTON AVE. SUITE 200
ST. LOUIS, MO 63103

LIFE SAFETY/FIRE PROTECTION:
CODE CONSULTANTS, INC.
2043 WOODLAND PARKWAY, SUITE 300
ST. LOUIS, MO 63146

ACOUSTICAL ENGINEERS:
ACOUSTICONTROL LLC
1709 WASHINGTON AVENUE, LOFT 300
ST. LOUIS, MO 63103

COMMISSIONING:
ZODIAC INTERNATIONAL
16100 CHESTERFIELD PARKWAY, SUITE 365
CHESTERFIELD, MO 63017

ENVIROMENTAL:
EVIRONMENTAL CONSULTANTS, LLC
#6 MEADOW HEIGHTS PROFESSIONAL PARK DR.
COLLINSVILLE, IL
62234

STRUCTURAL ENGINEER
kpff Consulting Engineers
1630 Des Peres Road, Suite 100
Saint Louis, MO 63131
(314) 835-0524 Fax (314) 835-0749
Mo. Certificate of Authority No. 2001010829

THIS MEDIA SHOULD NOT BE CONSIDERED A CERTIFIED DOCUMENT

ARCHITECT/ENGINEERS:

CHRISTNER
ARCHITECTS | DESIGNERS | PLANNERS | LANDSCAPE ARCHITECTS
168 N MERAMEC, SUITE 400 | ST. LOUIS, MISSOURI 63105
TEL 314 725 2927 | FAX 314 725 2928 | CHRISTNERINC.COM

The Professional Engineer whose personal seal and signature Appears on this page assumes responsibility only for what appears on this page and disclaims (pursuant to Section 327.411 RSMo) any responsibility for all other pages, plans, specifications, estimates, reports, or other documents or instruments not sealed by this Professional Engineer relating to, or intended to be used for, any part or parts of the engineering project to which this page refers.

DIRECTOR OF SPECIALTY CARE	INFECTION CONTROL PRACTITIONER	CHIEF ENGINEER	ASSISTANT DIRECTOR	ASSOCIATE DIRECTOR OF PATIENT SERVICES	CHIEF OF STAFF	ASSOCIATE DIRECTOR	MEDICAL CENTER DIRECTOR

Drawing Title: SECTIONS

Project Title: INTENSIVE CARE UNIT

Project Number: 110348.01

Building Number: #1

Location: HARRY S. TRUMAN VAMC

Drawing Number: SS 306

Dwg. 74 of 201

Date	Checked	Drawn	Approved
12/30/13	JM	AIS	LDS

Office of Construction and Facilities Management

Department of Veterans Affairs

VA FORM 08-6231 PRINTED ON ORIGINAL SIZE OF SHEET IS 30" X 42"

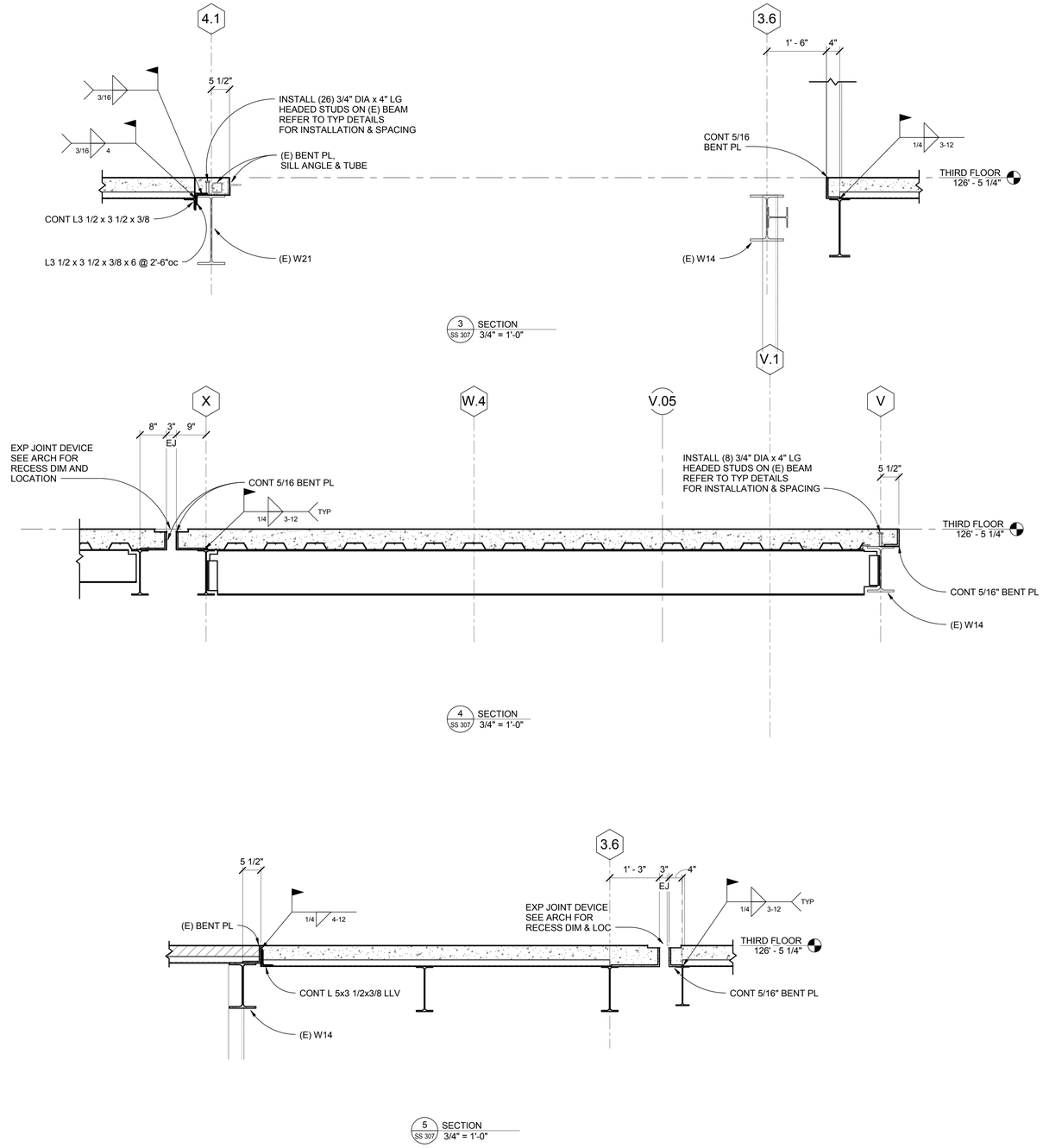

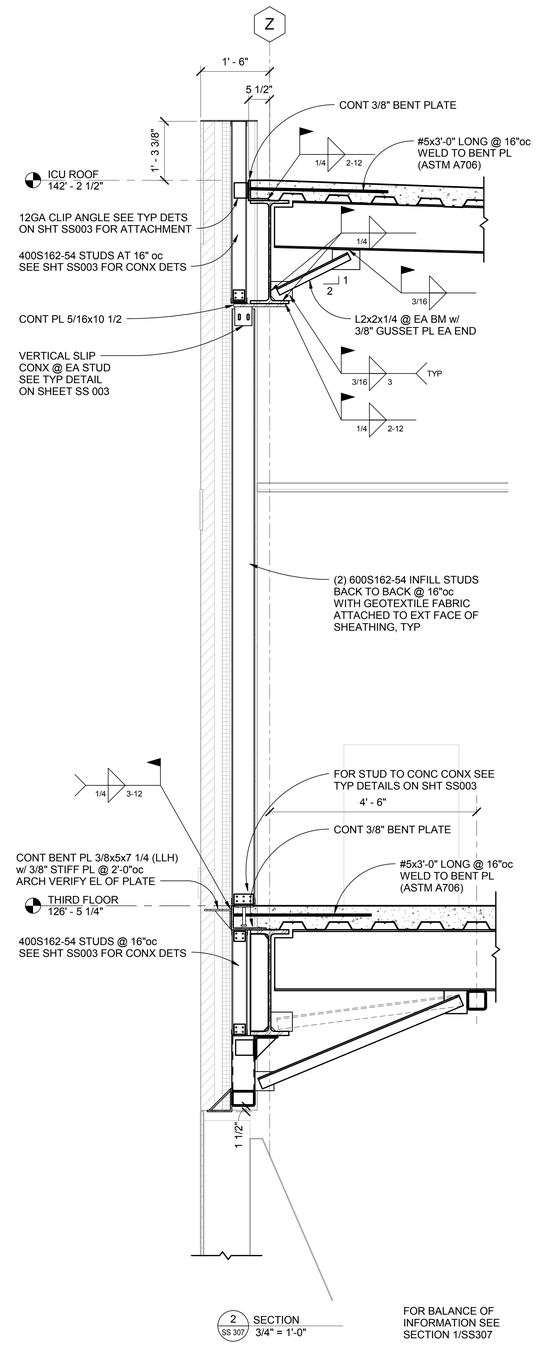

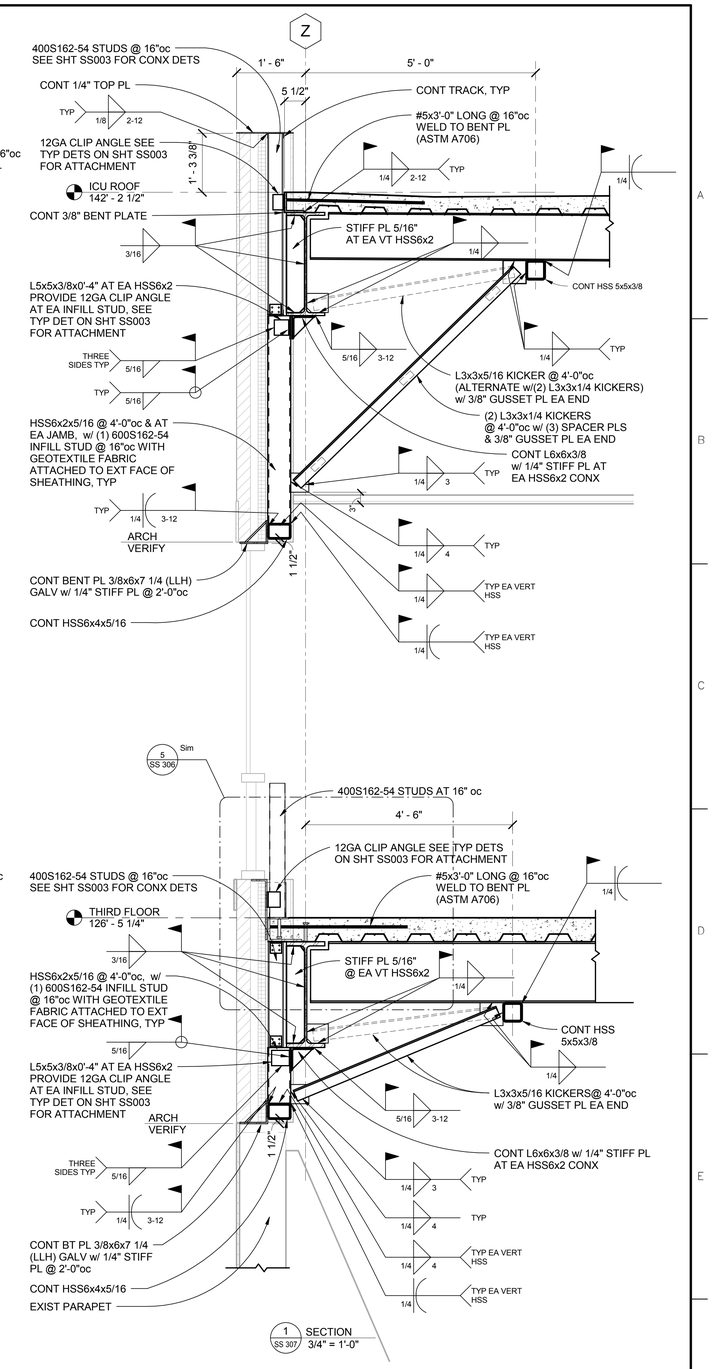

FOR BALANCE OF INFORMATION SEE SECTION 1/SS307

THE DIMENSIONS AND ELEVATIONS SHOWN FOR THE EXISTING CONSTRUCTION ARE ***NOT*** AS-BUILT DIMENSIONS BUT WERE OBTAINED FROM OTHER DRAWINGS AND DOCUMENTS. IT IS THE RESPONSIBILITY OF THE CONTRACTOR TO ***FIELD VERIFY*** ALL DIMENSIONS, ELEVATIONS, AND MEMBER SIZES AS REQUIRED PRIOR TO BEGINNING CONSTRUCTION, FABRICATION, ETC.

FULLY SPRINKLERED
CONSTRUCTION DOCUMENTS

No.	Date	Revisions

CONSULTANTS:

MECHANICAL/ELECTRICAL:
KJWW ENGINEERING CONSULTANTS - ST. LOUIS
#15 SUNNEN DRIVE, SUITE 104
ST. LOUIS, MO 63141

PLUMBING:
303RD ENGINEERING GROUP, LLC
1935 ARSENAL STREET
ST. LOUIS, MO 63118

ESTIMATING:
KWAME BUILDING GROUP
1204 WASHINGTON AVE. SUITE 200
ST. LOUIS, MO 63103

LIFE SAFETY/FIRE PROTECTION:
CODE CONSULTANTS, INC.
2043 WOODLAND PARKWAY, SUITE 300
ST. LOUIS, MO 63146

ACOUSTICAL ENGINEERS:
ACOUSTICONTROL LLC
1709 WASHINGTON AVENUE, LOFT 300
ST. LOUIS, MO 63103

COMMISSIONING:
ZODIAC INTERNATIONAL
16100 CHESTERFIELD PARKWAY, SUITE 365
CHESTERFIELD, MO 63017

ENVIROMENTAL:
EVIRONMENTAL CONSULTANTS, LLC
#6 MEADOW HEIGHTS PROFESSIONAL PARK DR.
COLLINSVILLE, IL
62234

STRUCTURAL ENGINEER
kpff Consulting Engineers
1630 Des Peres Road, Suite 100
Saint Louis, MO 63131
(314) 835-0524 Fax (314) 835-0749
Mo. Certificate of Authority No. 2001010829

THIS MEDIA SHOULD NOT BE CONSIDERED A CERTIFIED DOCUMENT

ARCHITECT/ENGINEERS:

CHRISTNER
ARCHITECTS | DESIGNERS | PLANNERS | LANDSCAPE ARCHITECTS
168 N MERAMEC, SUITE 400 | ST. LOUIS, MISSOURI 63105
TEL 314 725 2927 | FAX 314 725 2928 | CHRISTNERINC.COM

The Professional Engineer whose personal seal and signature Appears on this page assumes responsibility only for what appears on this page and disclaims (pursuant to Section 327.411 RSMo) any responsibility for all other pages, plans, specifications, estimates, reports, or other documents or instruments not sealed by this Professional Engineer relating to, or intended to be used for, any part or parts of the engineering project to which this page refers.

DIRECTOR OF SPECIALTY CARE	INFECTION CONTROL PRACITIONER	CHIEF ENGINEER	ASSISTANT DIRECTOR	ASSOCIATE DIRECTOR OF PATIENT SERVICES	CHIEF OF STAFF	ASSOCIATE DIRECTOR	MEDICAL CENTER DIRECTOR

Drawing Title: SECTIONS

Project Title: INTENSIVE CARE UNIT

Project Number: 110348.01

Building Number: #1

Location: HARRY S. TRUMAN VAMC

Date	Checked	Drawn	Approved
12/30/13	JM	AIS	LDS

Drawing Number: SS 307

Dwg. 75 of 201

Office of Construction and Facilities Management

Department of Veterans Affairs

VA FORM 08-6231 PRINTED ON ORIGINAL SIZE OF SHEET IS 30" X 42"

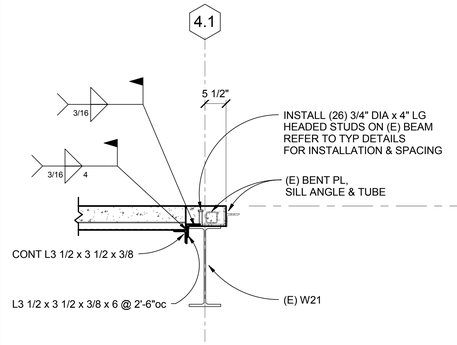

3 SS 307.4 SECTION 3/4" = 1'-0"

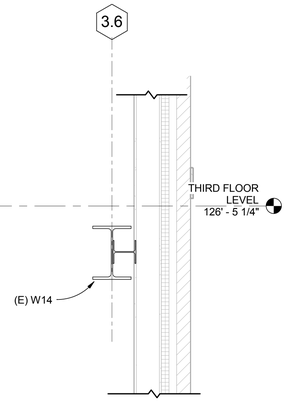

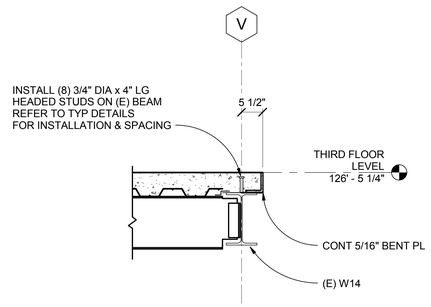

4 SS 307.4 SECTION 3/4" = 1'-0"

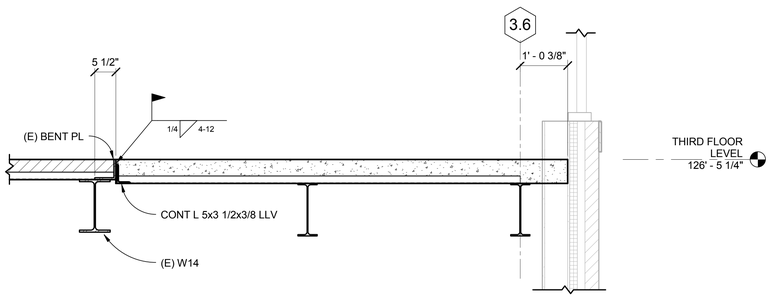

5 SS 307.4 SECTION 3/4" = 1'-0"

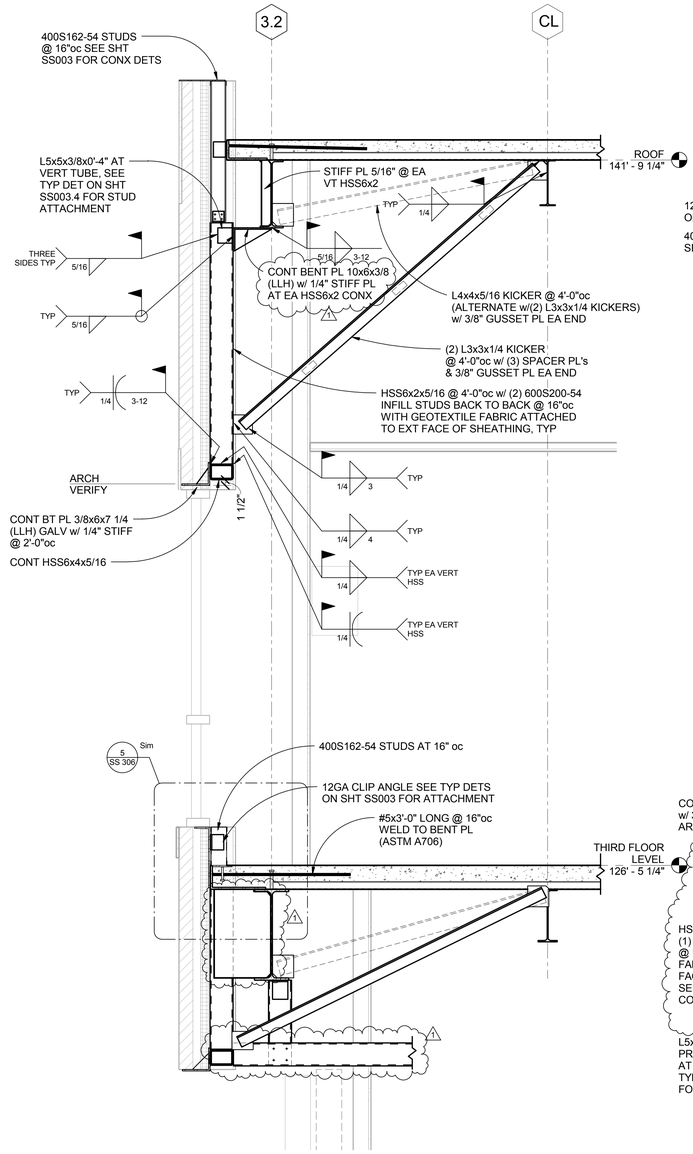

2 SS 307.4 SECTION 3/4" = 1'-0"

FOR BALANCE OF INFO
SEE SECTION 1 / SS 307.4

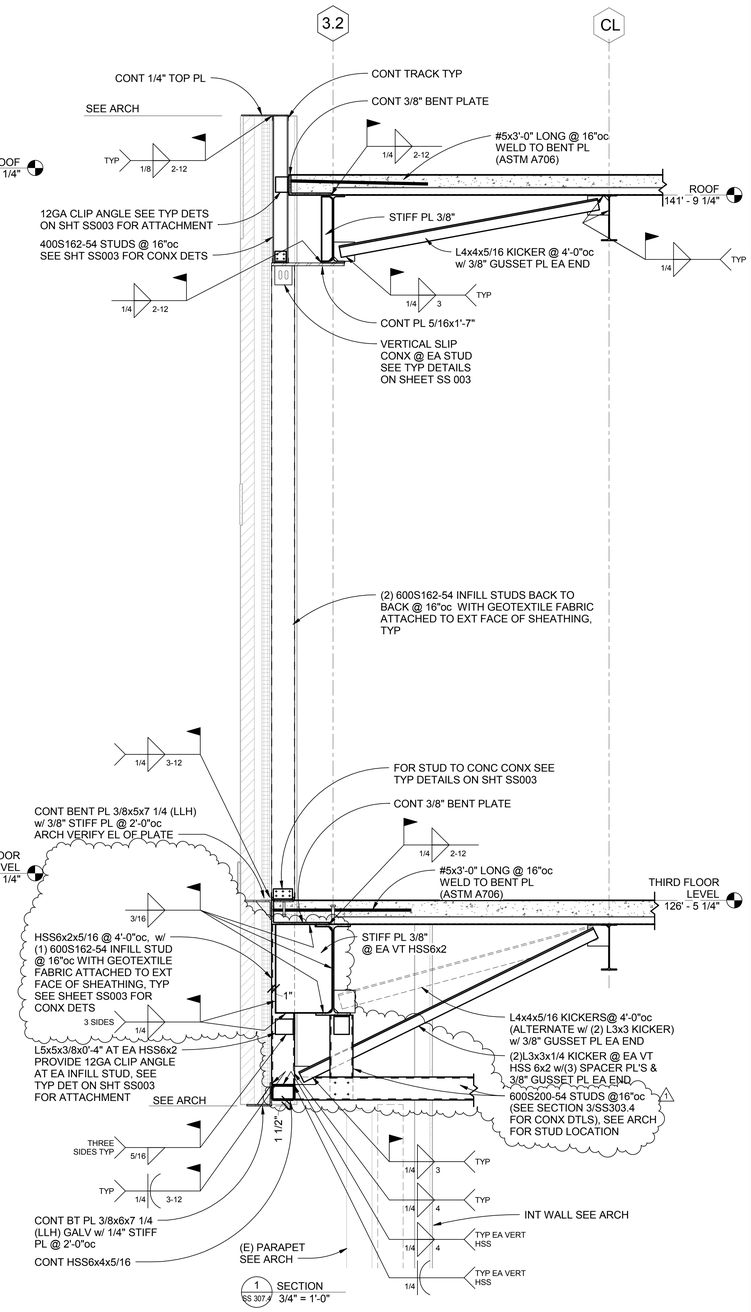

1 SS 307.4 SECTION 3/4" = 1'-0"

THE DIMENSIONS AND ELEVATIONS SHOWN FOR THE EXISTING CONSTRUCTION ARE ***NOT*** AS-BUILT DIMENSIONS BUT WERE OBTAINED FROM OTHER DRAWINGS AND DOCUMENTS. IT IS THE RESPONSIBILITY OF THE CONTRACTOR TO ***FIELD VERIFY*** ALL DIMENSIONS, ELEVATIONS, AND MEMBER SIZES AS REQUIRED PRIOR TO BEGINNING CONSTRUCTION, FABRICATION, ETC.

FULLY SPRINKLERED
CONSTRUCTION DOCUMENTS

No.	Date	Revisions
1	1/14/15	Amendment #4

CONSULTANTS:

MECHANICAL/ELECTRICAL:
KJWW ENGINEERING CONSULTANTS - ST. LOUIS
#15 SUNNEN DRIVE, SUITE 104
ST. LOUIS, MO 63141

PLUMBING:
303RD ENGINEERING GROUP, LLC
1935 ARSENAL STREET
ST. LOUIS, MO 63118

ESTIMATING:
KWAME BUILDING GROUP
1204 WASHINGTON AVE. SUITE 200
ST. LOUIS, MO 63103

LIFE SAFETY/FIRE PROTECTION:
CODE CONSULTANTS, INC.
2043 WOODLAND PARKWAY, SUITE 300
ST. LOUIS, MO 63146

ACOUSTICAL ENGINEERS:
ACOUSTICONTROL LLC
1709 WASHINGTON AVENUE, LOFT 300
ST. LOUIS, MO 63103

COMMISSIONING:
ZODIAC INTERNATIONAL
16100 CHESTERFIELD PARKWAY, SUITE 365
CHESTERFIELD, MO 63017

ENVIROMENTAL:
EVIRONMENTAL CONSULTANTS, LLC
#6 MEADOW HEIGHTS PROFESSIONAL PARK DR.
COLLINSVILLE, IL
62234

STRUCTURAL ENGINEER
kpff Consulting Engineers
1630 Des Peres Road, Suite 100
Saint Louis, MO 63131
(314) 835-0624 Fax (314) 835-0749
Mo. Certificate of Authority No. 2001010829

THIS MEDIA SHOULD NOT BE CONSIDERED A CERTIFIED DOCUMENT

ARCHITECT/ENGINEERS:

CHRISTNER
ARCHITECTS | DESIGNERS | PLANNERS | LANDSCAPE ARCHITECTS
168 N MERAMEC, SUITE 400 | ST. LOUIS, MISSOURI 63105
TEL 314 725 2927 | FAX 314 725 2928 | CHRISTNERINC.COM

The Professional Engineer whose personal seal and signature Appears on this page assumes responsibility only for what appears on this page and disclaims (pursuant to Section 327.411 RSMo) any responsibility for all other pages, plans, specifications, estimates, reports, or other documents or instruments not sealed by this Professional Engineer relating to, or intended to be used for, any part or parts of the engineering project to which this page refers.

Drawing Title: SECTIONS DEDUCT ALTERNATES 4,5

DIRECTOR OF SPECIALTY CARE | INFECTION CONTROL PRACTITIONER | CHIEF ENGINEER | ASSISTANT DIRECTOR | ASSOCIATE DIRECTOR OF PATIENT SERVICES | CHIEF OF STAFF | ASSOCIATE DIRECTOR | MEDICAL CENTER DIRECTOR

Project Title: INTENSIVE CARE UNIT

Project Number: 110348.01

Building Number: #1

Location: HARRY S. TRUMAN VAMC

Date	Checked	Drawn	Approved
9/4/14	JM	AIS	LDS

Drawing Number: SS 307.4

Dwg.110 of 201

Office of Construction and Facilities Management

Department of Veterans Affairs

VA FORM 08-6231 PRINTED ON ORIGINAL SIZE OF SHEET IS 30" X 42"

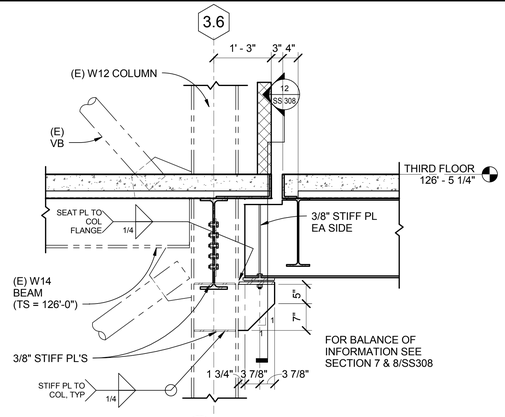

6 SS 308 SECTION 3/4" = 1'-0"

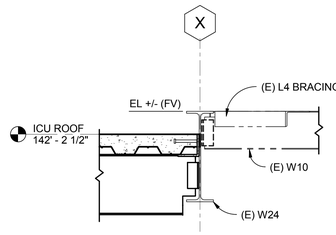

5 SS 308 SECTION 3/4" = 1'-0"

FOR BALANCE OF INFORMATION SEE SECTION 1/SS308

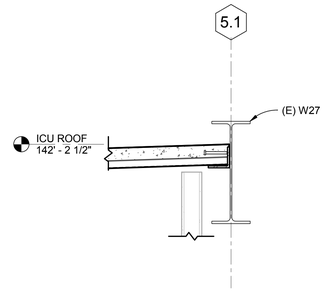

4 SS 308 SECTION 3/4" = 1'-0"

FOR BALANCE OF INFORMATION SEE SECTION 1/SS308

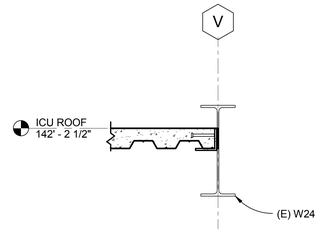

3 SS 308 SECTION 3/4" = 1'-0"

FOR BALANCE OF INFORMATION SEE SECTION 1/SS308

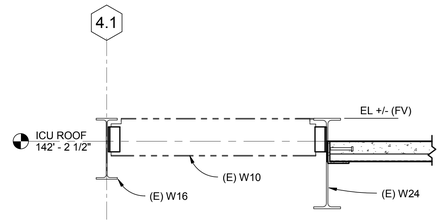

2 SS 308 SECTION 3/4" = 1'-0"

FOR BALANCE OF INFORMATION SEE SECTION 1/SS308

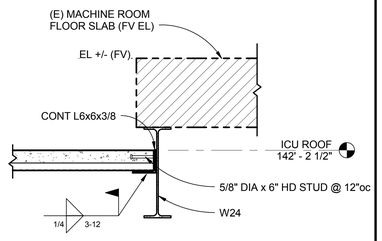

1 SS 308 SECTION 3/4" = 1'-0"

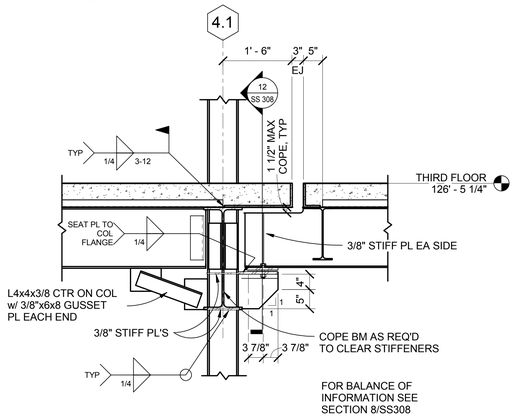

10 SS 308 SECTION 3/4" = 1'-0"

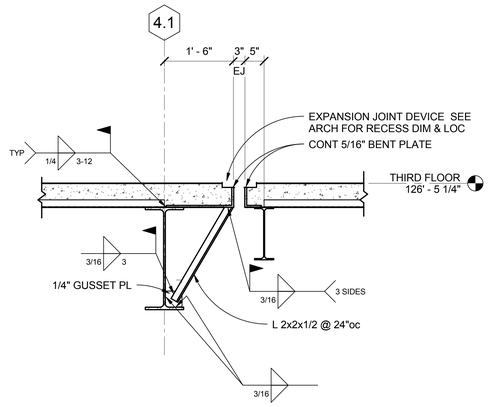

9 SS 308 SECTION 3/4" = 1'-0"

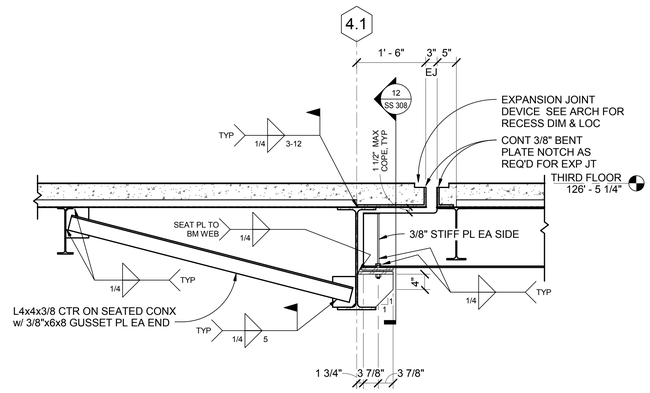

8 SS 308 SECTION 3/4" = 1'-0"

GRID LINE	BEARING PLATE	PTFE BEARING PAD	SEAT PLATE
Y	3/4 x 7 3/4 x 22	7 3/4 x 22	3/4 x 9 1/2 x 22
X.2	3/4 x 7 3/4 x 22	7 3/4 x 22	3/4 x 9 1/2 x 22
V	3/4 x 7 3/4 x 22 1/2	7 3/4 x 22 1/2	3/4 x 9 1/2 x 22 1/2
U	3/4 x 7 3/4 x 23	7 3/4 x 23	3/4 x 9 1/2 x 23
Z	3/4 x 7 3/4 x 22 1/2	7 3/4 x 22 1/2	3/4 x 9 1/2 x 22 1/2

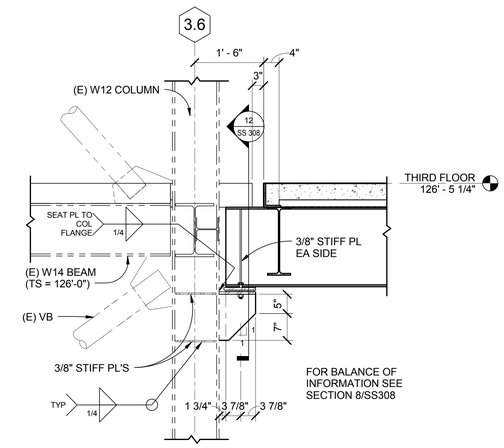

7 SS 308 SECTION 3/4" = 1'-0"

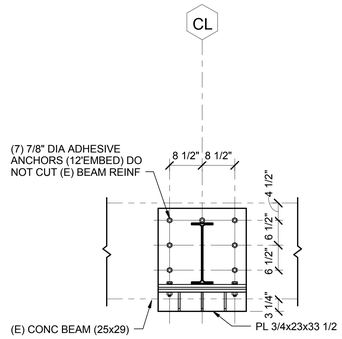

SECTION B-B

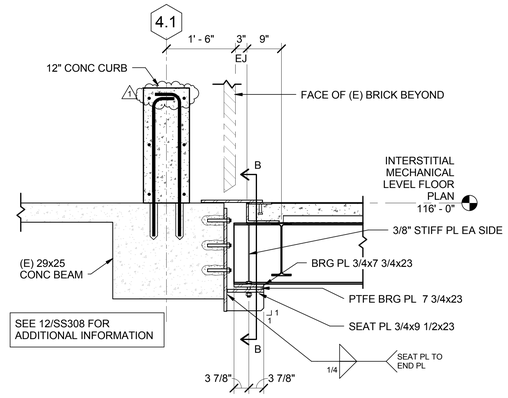

13 SS 308 SECTION 3/4" = 1'-0"

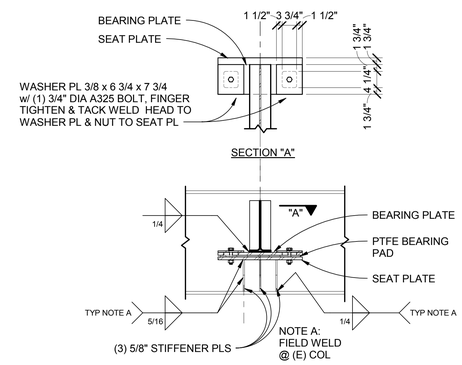

12 SS 308 EXPANSION JOINT FLOOR BEAM BEARING SEAT 3/4" = 1'-0"

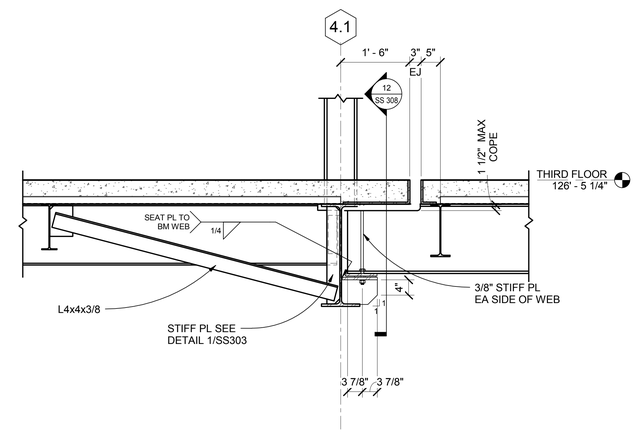

11 SS 308 SECTION 3/4" = 1'-0"

FOR BALANCE OF INFORMATION SEE SECTION 8/SS308

THE DIMENSIONS AND ELEVATIONS SHOWN FOR THE EXISTING CONSTRUCTION ARE ***NOT*** AS-BUILT DIMENSIONS BUT WERE OBTAINED FROM OTHER DRAWINGS AND DOCUMENTS. IT IS THE RESPONSIBILITY OF THE CONTRACTOR TO ***FIELD VERIFY*** ALL DIMENSIONS, ELEVATIONS, AND MEMBER SIZES AS REQUIRED PRIOR TO BEGINNING CONSTRUCTION, FABRICATION, ETC.

FULLY SPRINKLERED
CONSTRUCTION DOCUMENTS

No.	Date	Revisions
1	1/14/15	Amendment #4

CONSULTANTS:

MECHANICAL/ELECTRICAL:
KJWW ENGINEERING CONSULTANTS - ST. LOUIS
#15 SUNNEN DRIVE, SUITE 104
ST. LOUIS, MO 63141

PLUMBING:
303RD ENGINEERING GROUP, LLC
1935 ARSENAL STREET
ST. LOUIS, MO 63118

ESTIMATING:
KWAME BUILDING GROUP
1204 WASHINGTON AVE. SUITE 200
ST. LOUIS, MO 63103

LIFE SAFETY/FIRE PROTECTION:
CODE CONSULTANTS, INC.
2043 WOODLAND PARKWAY, SUITE 300
ST. LOUIS, MO 63146

ACOUSTICAL ENGINEERS:
ACOUSTICONTROL LLC
1709 WASHINGTON AVENUE, LOFT 300
ST. LOUIS, MO 63103

COMMISSIONING:
ZODIAC INTERNATIONAL
16100 CHESTERFIELD PARKWAY, SUITE 365
CHESTERFIELD, MO 63017

ENVIROMENTAL:
EVIRONMENTAL CONSULTANTS, LLC
#6 MEADOW HEIGHTS PROFESSIONAL PARK DR.
COLLINSVILLE, IL
62234

STRUCTURAL ENGINEER
kpff Consulting Engineers
1630 Des Peres Road, Suite 100
Saint Louis, MO 63131
(314) 835-0524 Fax (314) 835-0749
Mo. Certificate of Authority No. 2001010829

THIS MEDIA SHOULD NOT BE CONSIDERED A CERTIFIED DOCUMENT

ARCHITECT/ENGINEERS:

CHRISTNER
ARCHITECTS | DESIGNERS | PLANNERS | LANDSCAPE ARCHITECTS
168 N MERAMEC, SUITE 400 | ST. LOUIS, MISSOURI 63105
TEL 314 725 2927 | FAX 314 725 2928 | CHRISTNERINC.COM

The Professional Engineer whose personal seal and signature Appears on this page assumes responsibility only for what appears on this page and disclaims (pursuant to Section 327.411 RSMo) any responsibility for all other pages, plans, specifications, estimates, reports, or other documents or instruments not sealed by this Professional Engineer relating to, or intended to be used for, any part or parts of the engineering project to which this page refers.

Drawing Title: SECTIONS

DIRECTOR OF SPECIALTY CARE | INFECTION CONTROL PRACTITIONER | CHIEF ENGINEER | ASSISTANT DIRECTOR | ASSOCIATE DIRECTOR OF PATIENT SERVICES | CHIEF OF STAFF | ASSOCIATE DIRECTOR | MEDICAL CENTER DIRECTOR

Project Title: INTENSIVE CARE UNIT

Project Number: 110348.01

Building Number: #1

Location: HARRY S. TRUMAN VAMC

Date: 12/30/13 | Checked: JM | Drawn: AIS | Approved: LDS

Drawing Number: SS 308

Dwg. 76 of 201

Office of Construction and Facilities Management

Department of Veterans Affairs

VA FORM 08-6231 PRINTED ON ORIGINAL SIZE OF SHEET IS 30" X 42"

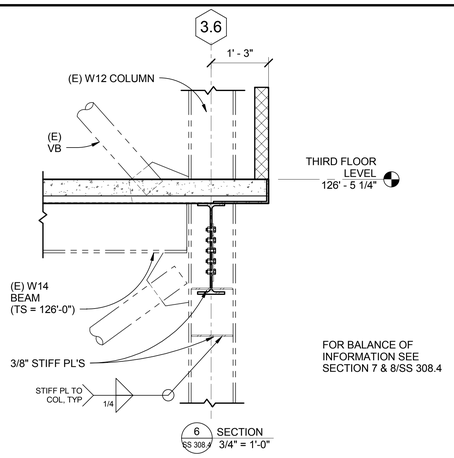

6 SS 308.4 SECTION 3/4" = 1'-0"

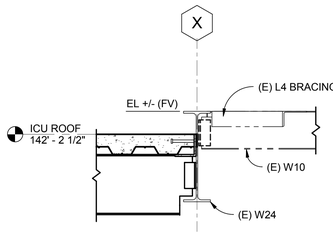

5 SS 308.4 SECTION 3/4" = 1'-0" FOR BALANCE OF INFORMATION SEE SECTION 1/SS 308.4

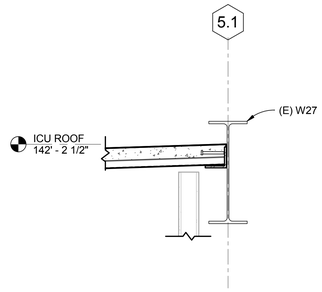

4 SS 308.4 SECTION 3/4" = 1'-0" FOR BALANCE OF INFORMATION SEE SECTION 1/SS 308.4

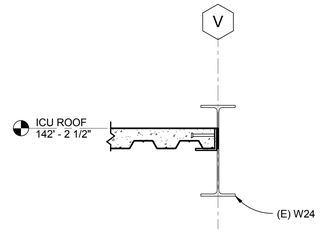

3 SS 308.4 SECTION 3/4" = 1'-0" FOR BALANCE OF INFORMATION SEE SECTION 1/SS 308.4

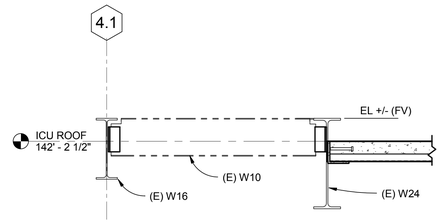

2 SS 308.4 SECTION 3/4" = 1'-0" FOR BALANCE OF INFORMATION SEE SECTION 1/SS 308.4

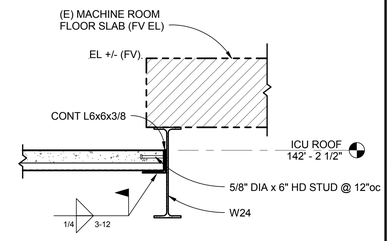

1 SS 308.4 SECTION 3/4" = 1'-0"

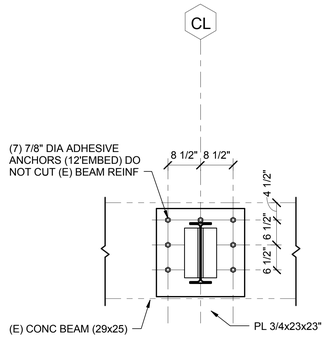

SECTION B-B

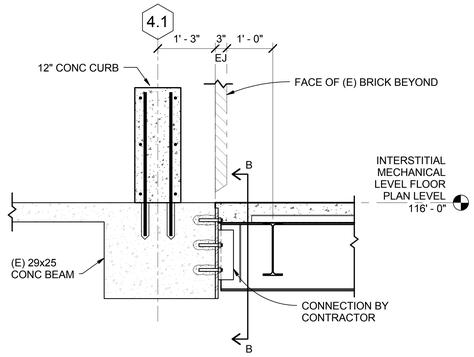

9 SS 308.4 SECTION 3/4" = 1'-0"

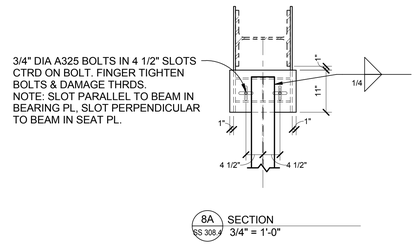

8A SS 308.4 SECTION 3/4" = 1'-0"

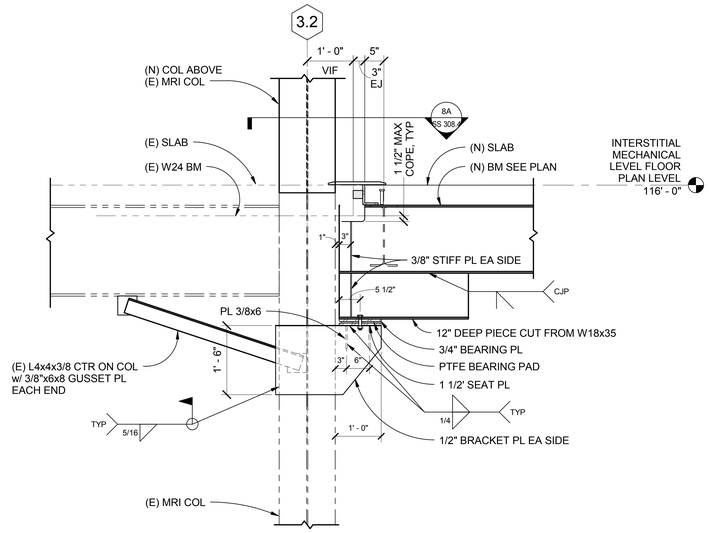

8 SS 308.4 SECTION 3/4" = 1'-0" FOR BALANCE OF INFORMATION SEE SECTION 8/SS 308.4

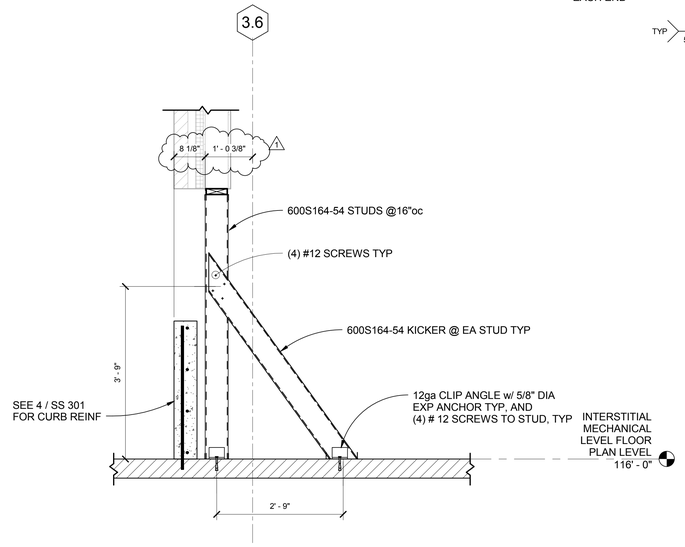

7 SS 308.4 SECTION 3/4" = 1'-0"

THE DIMENSIONS AND ELEVATIONS SHOWN FOR THE EXISTING CONSTRUCTION ARE ***NOT*** AS-BUILT DIMENSIONS BUT WERE OBTAINED FROM OTHER DRAWINGS AND DOCUMENTS. IT IS THE RESPONSIBILITY OF THE CONTRACTOR TO ***FIELD VERIFY*** ALL DIMENSIONS, ELEVATIONS, AND MEMBER SIZES AS REQUIRED PRIOR TO BEGINNING CONSTRUCTION, FABRICATION, ETC.

FULLY SPRINKLERED
CONSTRUCTION DOCUMENTS

No.	Date	Revisions
1	1/14/15	Amendment #4

CONSULTANTS:

MECHANICAL/ELECTRICAL:
KJWW ENGINEERING CONSULTANTS - ST. LOUIS
#15 SUNNEN DRIVE, SUITE 104
ST. LOUIS, MO 63141

PLUMBING:
303RD ENGINEERING GROUP, LLC
1935 ARSENAL STREET
ST. LOUIS, MO 63118

ESTIMATING:
KWAME BUILDING GROUP
1204 WASHINGTON AVE. SUITE 200
ST. LOUIS, MO 63103

LIFE SAFETY/FIRE PROTECTION:
CODE CONSULTANTS, INC.
2043 WOODLAND PARKWAY, SUITE 300
ST. LOUIS, MO 63146

ACOUSTICAL ENGINEERS:
ACOUSTICONTROL LLC
1709 WASHINGTON AVENUE, LOFT 300
ST. LOUIS, MO 63103

COMMISSIONING:
ZODIAC INTERNATIONAL
16100 CHESTERFIELD PARKWAY, SUITE 365
CHESTERFIELD, MO 63017

ENVIROMENTAL:
EVIRONMENTAL CONSULTANTS, LLC
#6 MEADOW HEIGHTS PROFESSIONAL PARK DR.
COLLINSVILLE, IL
62234

STRUCTURAL ENGINEER
kpff Consulting Engineers
1630 Des Peres Road, Suite 100
Saint Louis, MO 63131
(314) 835-0524 Fax (314) 835-0749
Mo. Certificate of Authority No. 2001010829

THIS MEDIA SHOULD NOT BE CONSIDERED A CERTIFIED DOCUMENT

ARCHITECT/ENGINEERS:

CHRISTNER
ARCHITECTS | DESIGNERS | PLANNERS | LANDSCAPE ARCHITECTS
168 N MERAMEC, SUITE 400 | ST. LOUIS, MISSOURI 63105
TEL 314 725 2927 | FAX 314 725 2928 | CHRISTNERINC.COM

The Professional Engineer whose personal seal and signature Appears on this page assumes responsibility only for what appears on this page and disclaims (pursuant to Section 327.411 RSMo) any responsibility for all other pages, plans, specifications, estimates, reports, or other documents or instruments not sealed by this Professional Engineer relating to, or intended to be used for, any part or parts of the engineering project to which this page refers.

DIRECTOR OF SPECIALTY CARE	INFECTION CONTROL PRACTITIONER	CHIEF ENGINEER	ASSISTANT DIRECTOR	ASSOCIATE DIRECTOR OF PATIENT SERVICES	CHIEF OF STAFF	ASSOCIATE DIRECTOR	MEDICAL CENTER DIRECTOR

Drawing Title: SECTIONS DEDUCT ALTERNATES 4,5

Project Title: INTENSIVE CARE UNIT

Location: HARRY S. TRUMAN VAMC

Date	Checked	Drawn	Approved
9/4/14	JM	AIS	LDS

Project Number: 110348.01

Building Number: #1

Drawing Number: SS 308.4

Dwg.111 of 201

Office of Construction and Facilities Management

Department of Veterans Affairs

VA FORM 08-6231 PRINTED ON ORIGINAL SIZE OF SHEET IS 30" X 42"

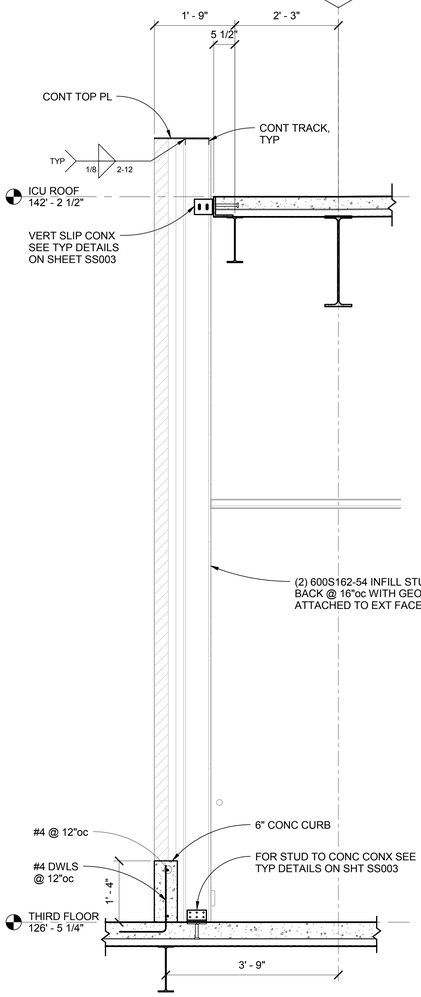

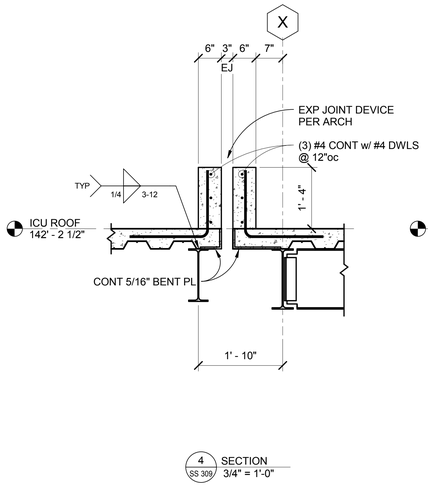

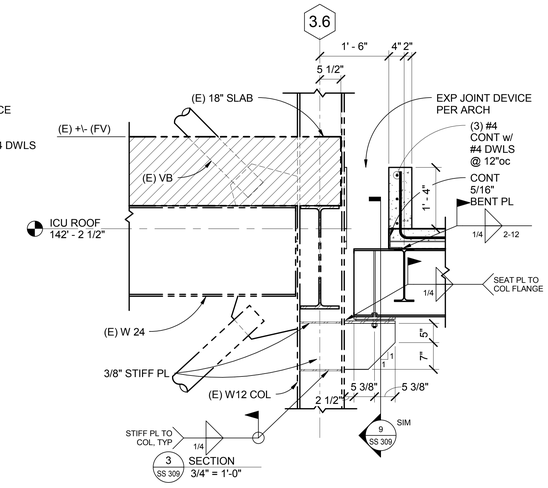

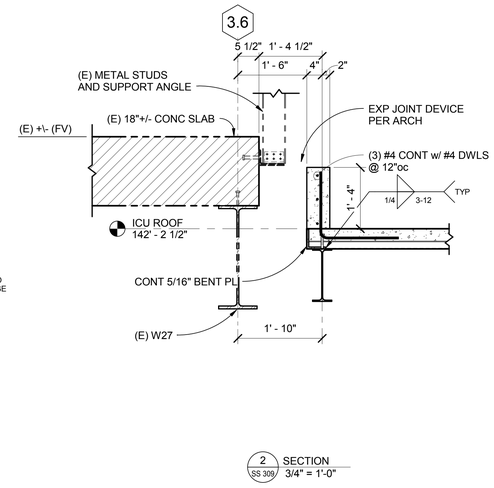

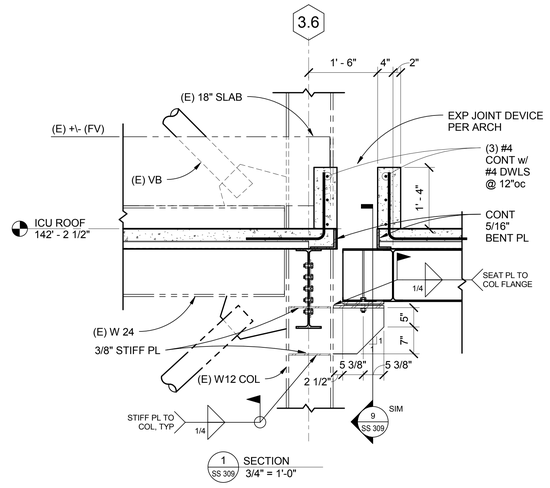

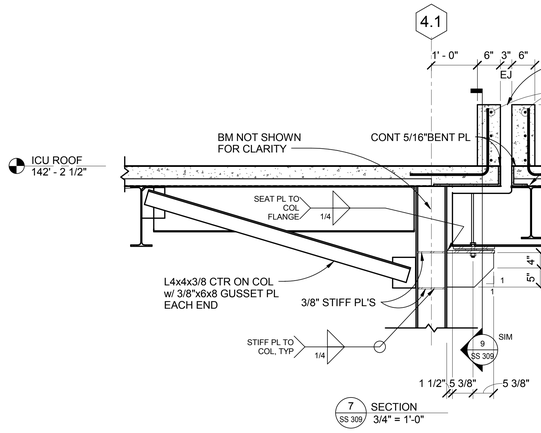

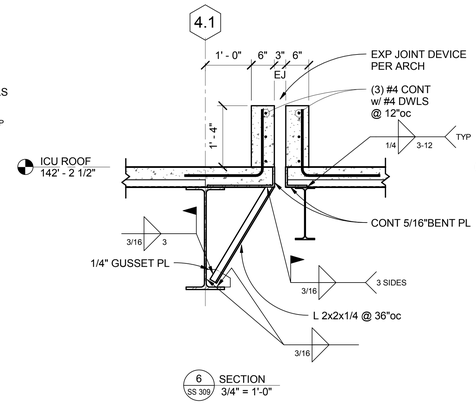

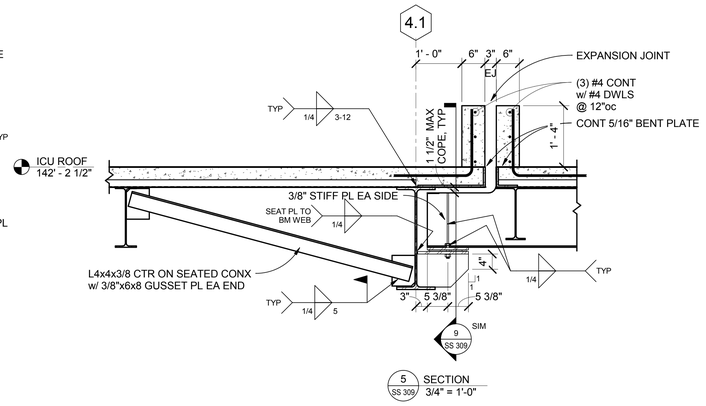

GRID LINE	BEARING PLATE	PTFE BEARING PAD	SEAT PLATE
Y	3/4 x 10 3/4 x 29 1/2	10 3/4 x 29 1/2	3/4 x 13 1/4 x 29 1/2
X.2	3/4 x 10 3/4 x 29	10 3/4 x 29	3/4 x 13 1/4 x 29
V	3/4 x 10 3/4 x 30	10 3/4 x 30	3/4 x 13 1/4 x 30
U	3/4 x 10 3/4 x 29	10 3/4 x 29	3/4 x 13 1/4 x 29

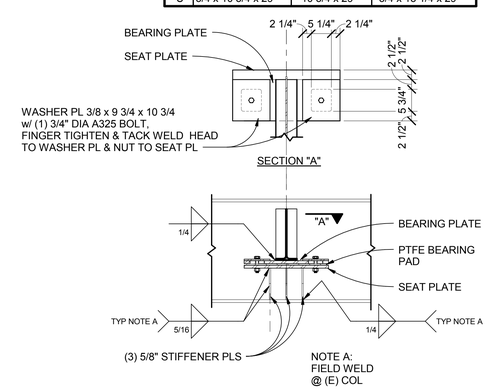

THE DIMENSIONS AND ELEVATIONS SHOWN FOR THE EXISTING CONSTRUCTION ARE ***NOT*** AS-BUILT DIMENSIONS BUT WERE OBTAINED FROM OTHER DRAWINGS AND DOCUMENTS. IT IS THE RESPONSIBILITY OF THE CONTRACTOR TO ***FIELD VERIFY*** ALL DIMENSIONS, ELEVATIONS, AND MEMBER SIZES AS REQUIRED PRIOR TO BEGINNING CONSTRUCTION, FABRICATION, ETC.

FULLY SPRINKLERED
CONSTRUCTION DOCUMENTS

No.	Date	Revisions

CONSULTANTS:

MECHANICAL/ELECTRICAL:
KJWW ENGINEERING CONSULTANTS - ST. LOUIS
#15 SUNNEN DRIVE, SUITE 104
ST. LOUIS, MO 63141

PLUMBING:
303RD ENGINEERING GROUP, LLC
1935 ARSENAL STREET
ST. LOUIS, MO 63118

ESTIMATING:
KWAME BUILDING GROUP
1204 WASHINGTON AVE. SUITE 200
ST. LOUIS, MO 63103

LIFE SAFETY/FIRE PROTECTION:
CODE CONSULTANTS, INC.
2043 WOODLAND PARKWAY, SUITE 300
ST. LOUIS, MO 63146

ACOUSTICAL ENGINEERS:
ACOUSTICONTROL LLC
1709 WASHINGTON AVENUE, LOFT 300
ST. LOUIS, MO 63103

COMMISSIONING:
ZODIAC INTERNATIONAL
16100 CHESTERFIELD PARKWAY, SUITE 365
CHESTERFIELD, MO 63017

ENVIROMENTAL:
EVIRONMENTAL CONSULTANTS, LLC
#6 MEADOW HEIGHTS PROFESSIONAL PARK DR.
COLLINSVILLE, IL
62234

STRUCTURAL ENGINEER
kpff Consulting Engineers
1630 Des Peres Road, Suite 100
Saint Louis, MO 63131
(314) 835-0524 Fax (314) 835-0749
Mo. Certificate of Authority No. 2001010829

THIS MEDIA SHOULD NOT BE CONSIDERED A CERTIFIED DOCUMENT

ARCHITECT/ENGINEERS:

CHRISTNER
ARCHITECTS | DESIGNERS | PLANNERS | LANDSCAPE ARCHITECTS
168 N MERAMEC, SUITE 400 | ST. LOUIS, MISSOURI 63105
TEL 314 725 2927 | FAX 314 725 2928 | CHRISTNERINC.COM

The Professional Engineer whose personal seal and signature Appears on this page assumes responsibility only for what appears on this page and disclaims (pursuant to Section 327.411 RSMo) any responsibility for all other pages, plans, specifications, estimates, reports, or other documents or instruments not sealed by this Professional Engineer relating to, or intended to be used for, any part or parts of the engineering project to which this page refers.

DIRECTOR OF SPECIALTY CARE | INFECTION CONTROL PRACTITIONER | CHIEF ENGINEER | ASSISTANT DIRECTOR | ASSOCIATE DIRECTOR OF PATIENT SERVICES | CHIEF OF STAFF | ASSOCIATE DIRECTOR | MEDICAL CENTER DIRECTOR

Drawing Title: SECTIONS

Project Title: INTENSIVE CARE UNIT

Project Number: 110348.01

Building Number: #1

Location: HARRY S. TRUMAN VAMC

Drawing Number: SS 309

Dwg. 77 of 201

Date	Checked	Drawn	Approved
12/30/13	SRH	AIS	LDS

Office of Construction and Facilities Management

Department of Veterans Affairs

VA FORM 08-6231 PRINTED ON ORIGINAL SIZE OF SHEET IS 30" X 42"

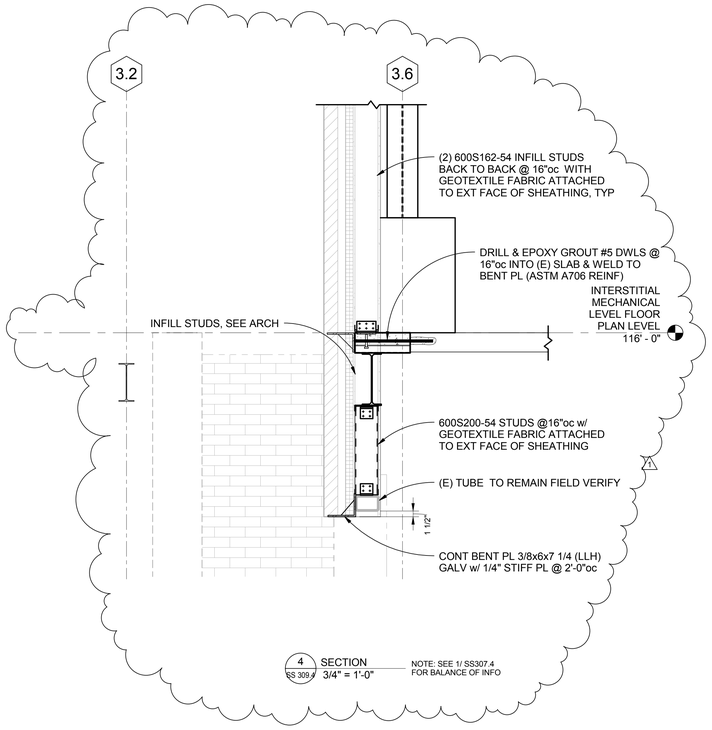

4 SECTION SS 309.4 3/4" = 1'-0"

NOTE: SEE 1/ SS307.4 FOR BALANCE OF INFO

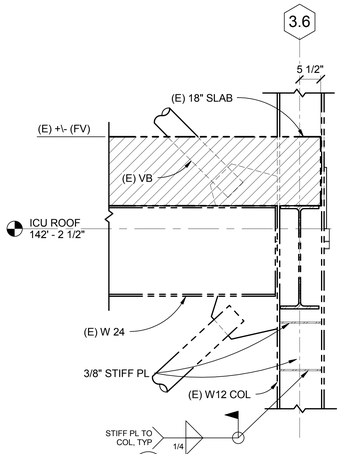

3 SECTION SS 309.4 3/4" = 1'-0"

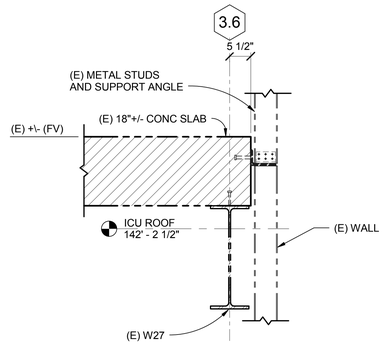

2 SECTION SS 309.4 3/4" = 1'-0"

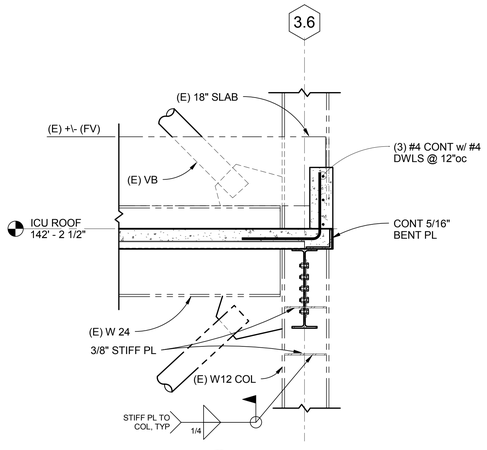

1 SECTION SS 309.4 3/4" = 1'-0"

THE DIMENSIONS AND ELEVATIONS SHOWN FOR THE EXISTING CONSTRUCTION ARE ***NOT*** AS-BUILT DIMENSIONS BUT WERE OBTAINED FROM OTHER DRAWINGS AND DOCUMENTS. IT IS THE RESPONSIBILITY OF THE CONTRACTOR TO ***FIELD VERIFY*** ALL DIMENSIONS, ELEVATIONS, AND MEMBER SIZES AS REQUIRED PRIOR TO BEGINNING CONSTRUCTION, FABRICATION, ETC.

FULLY SPRINKLERED
CONSTRUCTION DOCUMENTS

No.	Date	Revisions
1	1/14/15	Amendment #4

CONSULTANTS:

MECHANICAL/ELECTRICAL:
KJWW ENGINEERING CONSULTANTS - ST. LOUIS
#15 SUNNEN DRIVE, SUITE 104
ST. LOUIS, MO 63141

PLUMBING:
303RD ENGINEERING GROUP, LLC
1935 ARSENAL STREET
ST. LOUIS, MO 63118

ESTIMATING:
KWAME BUILDING GROUP
1204 WASHINGTON AVE. SUITE 200
ST. LOUIS, MO 63103

LIFE SAFETY/FIRE PROTECTION:
CODE CONSULTANTS, INC.
2043 WOODLAND PARKWAY, SUITE 300
ST. LOUIS, MO 63146

ACOUSTICAL ENGINEERS:
ACOUSTICONTROL LLC
1709 WASHINGTON AVENUE, LOFT 300
ST. LOUIS, MO 63103

COMMISSIONING:
ZODIAC INTERNATIONAL
16100 CHESTERFIELD PARKWAY, SUITE 365
CHESTERFIELD, MO 63017

ENVIROMENTAL:
EVIRONMENTAL CONSULTANTS, LLC
#6 MEADOW HEIGHTS PROFESSIONAL PARK DR.
COLLINSVILLE, IL
62234

STRUCTURAL ENGINEER
kpff Consulting Engineers
1630 Des Peres Road, Suite 100
Saint Louis, MO 63131
(314) 835-0524 Fax (314) 835-0749
Mo. Certificate of Authority No. 2001010829

THIS MEDIA SHOULD NOT BE CONSIDERED A CERTIFIED DOCUMENT

ARCHITECT/ENGINEERS:

CHRISTNER
ARCHITECTS | DESIGNERS | PLANNERS | LANDSCAPE ARCHITECTS
168 N MERAMEC, SUITE 400 | ST. LOUIS, MISSOURI 63105
TEL 314 725 2927 | FAX 314 725 2928 | CHRISTNERINC.COM

The Professional Engineer whose personal seal and signature Appears on this page assumes responsibility only for what appears on this page and disclaims (pursuant to Section 327.411 RSMo) any responsibility for all other pages, plans, specifications, estimates, reports, or other documents or instruments not sealed by this Professional Engineer relating to, or intended to be used for, any part or parts of the engineering project to which this page refers.

Drawing Title: SECTIONS DEDUCT ALTERNATES 4,5

DIRECTOR OF SPECIALTY CARE | INFECTION CONTROL PRACTITIONER | CHIEF ENGINEER | ASSISTANT DIRECTOR | ASSOCIATE DIRECTOR OF PATIENT SERVICES | CHIEF OF STAFF | ASSOCIATE DIRECTOR | MEDICAL CENTER DIRECTOR

Project Title: INTENSIVE CARE UNIT

Location: HARRY S. TRUMAN VAMC

Date	Checked	Drawn	Approved
9/4/14	SRH	AIS	LDS

Project Number: 110348.01

Building Number: #1

Drawing Number: SS 309.4

Dwg.112 of 201

Office of Construction and Facilities Management

Department of Veterans Affairs

VA FORM 08-6231 PRINTED ON ORIGINAL SIZE OF SHEET IS 30" X 42"

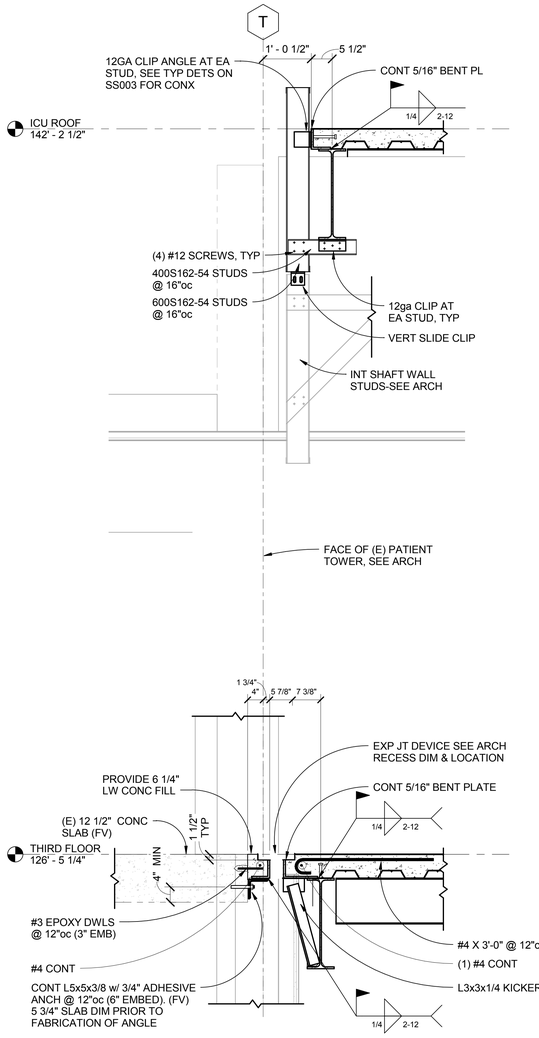

4 SS 310 SECTION 3/4" = 1'-0"

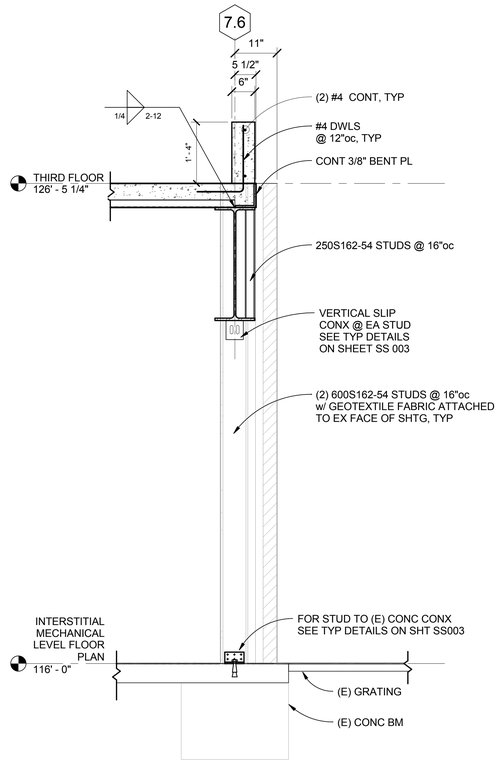

3 SS 310 SECTION 3/4" = 1'-0"

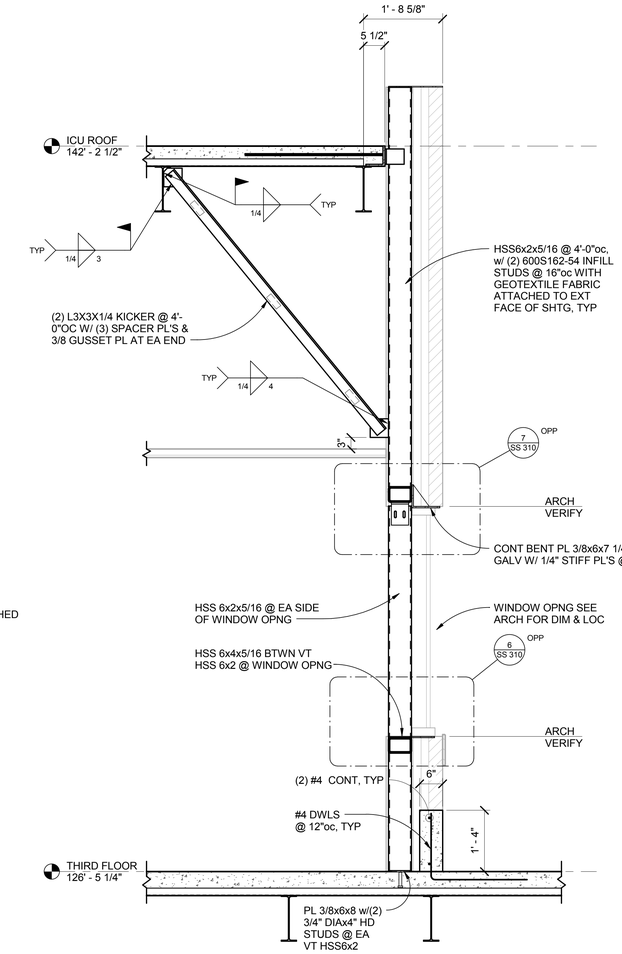

2 SS 310 SECTION 3/4" = 1'-0"

FOR BALANCE OF INFORMATION REF: SECTION 1/SS310

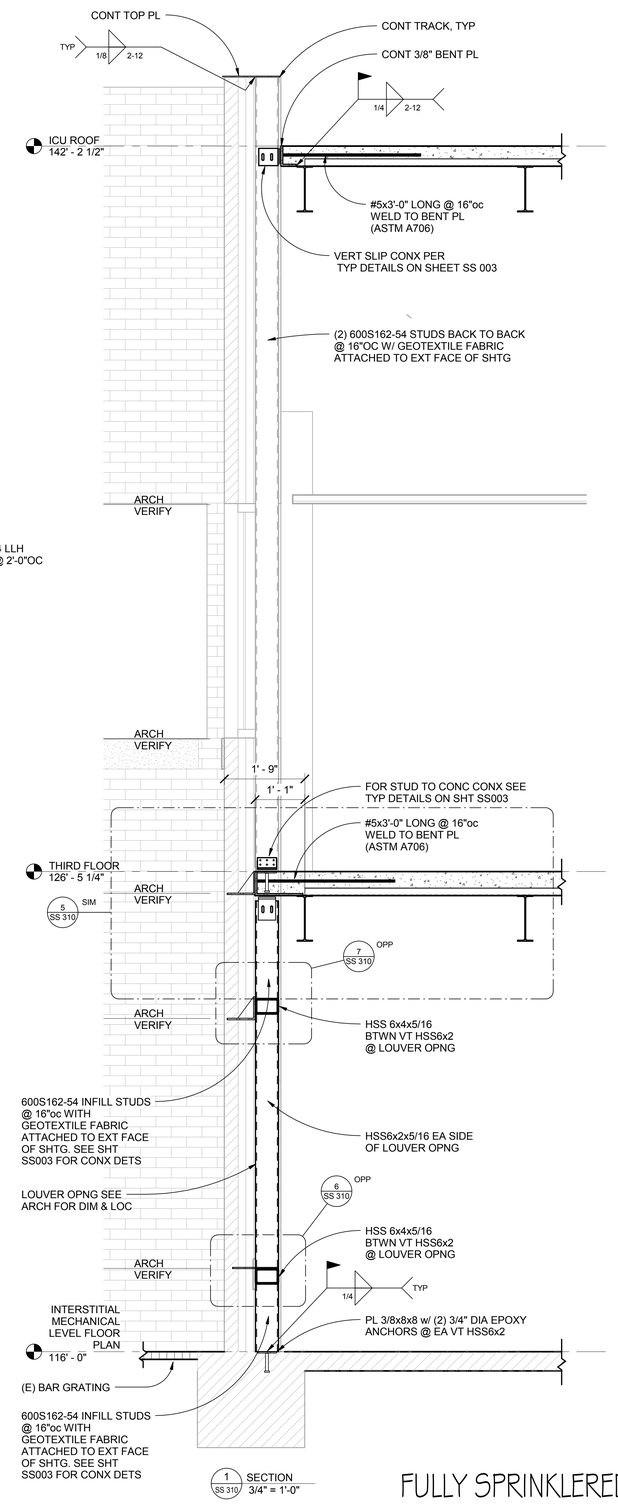

1 SS 310 SECTION 3/4" = 1'-0"

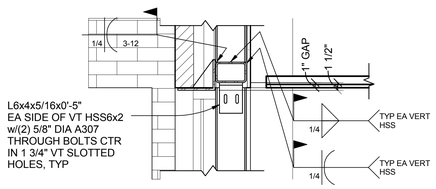

7 SS 310 DETAIL 1" = 1'-0"

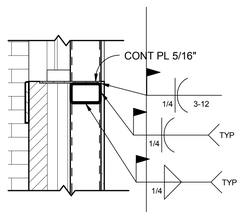

6 SS 310 DETAIL 1" = 1'-0"

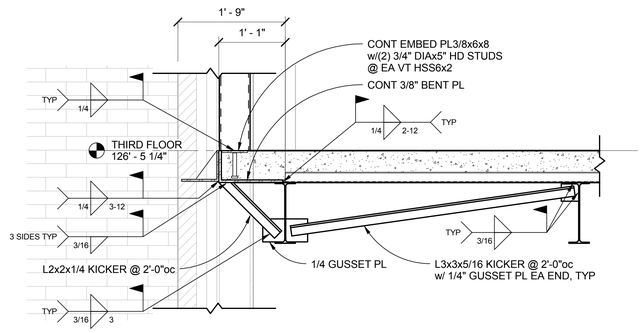

5 SS 310 DETAIL 1" = 1'-0"

FULLY SPRINKLERED
CONSTRUCTION DOCUMENTS

No.	Date	Revisions

CONSULTANTS:

MECHANICAL/ELECTRICAL:
KJWW ENGINEERING CONSULTANTS - ST. LOUIS
#15 SUNNEN DRIVE, SUITE 104
ST. LOUIS, MO 63141

PLUMBING:
303RD ENGINEERING GROUP, LLC
1935 ARSENAL STREET
ST. LOUIS, MO 63118

ESTIMATING:
KWAME BUILDING GROUP
1204 WASHINGTON AVE. SUITE 200
ST. LOUIS, MO 63103

LIFE SAFETY/FIRE PROTECTION:
CODE CONSULTANTS, INC.
2043 WOODLAND PARKWAY, SUITE 300
ST. LOUIS, MO 63146

ACOUSTICAL ENGINEERS:
ACOUSTICONTROL LLC
1709 WASHINGTON AVENUE, LOFT 300
ST. LOUIS, MO 63103

COMMISSIONING:
ZODIAC INTERNATIONAL
16100 CHESTERFIELD PARKWAY, SUITE 365
CHESTERFIELD, MO 63017

ENVIROMENTAL:
EVIRONMENTAL CONSULTANTS, LLC
#6 MEADOW HEIGHTS PROFESSIONAL PARK DR.
COLLINSVILLE, IL
62234

STRUCTURAL ENGINEER
kpff Consulting Engineers
1630 Des Peres Road, Suite 100
Saint Louis, MO 63131
(314) 835-0524 Fax (314) 835-0749
Mo. Certificate of Authority No. 2001010829

THIS MEDIA SHOULD NOT BE CONSIDERED A CERTIFIED DOCUMENT

ARCHITECT/ENGINEERS:

CHRISTNER
ARCHITECTS | DESIGNERS | PLANNERS | LANDSCAPE ARCHITECTS
168 N MERAMEC, SUITE 400 | ST. LOUIS, MISSOURI 63105
TEL 314 725 2927 | FAX 314 725 2928 | CHRISTNERINC.COM

The Professional Engineer whose personal seal and signature Appears on this page assumes responsibility only for what appears on this page and disclaims (pursuant to Section 327.411 RSMo) any responsibility for all other pages, plans, specifications, estimates, reports, or other documents or instruments not sealed by this Professional Engineer relating to, or intended to be used for, any part or parts of the engineering project to which this page refers.

Drawing Title: SECTIONS

DIRECTOR OF SPECIALTY CARE	INFECTION CONTROL PRACITIONER	CHIEF ENGINEER	ASSISTANT DIRECTOR	ASSOCIATE DIRECTOR OF PATIENT SERVICES	CHIEF OF STAFF	ASSOCIATE DIRECTOR	MEDICAL CENTER DIRECTOR

Project Title: INTENSIVE CARE UNIT

Location: HARRY S. TRUMAN VAMC

Date	Checked	Drawn	Approved
12/30/13	JM	JKE	LDS

Project Number: 110348.01

Building Number: #1

Drawing Number: SS 310

Dwg. 78 of 201

Office of Construction and Facilities Management

Department of Veterans Affairs

VA FORM 08-6231 PRINTED ON ORIGINAL SIZE OF SHEET IS 30" X 42"

STEEL COLUMN BASE PLATE AND ANCHOR BOLT SCHEDULE

Column Location Mark	SIZE	BASE PLATE	ANCHOR BOLTS	COMMENTS
T.5-1.6	W14X109			SEE DETAILS 8 & 9/SS003
T.5-1.66	W8x31	1x10x14	(4) 3/4" DIA	A325 BOLTS
T.5-2.7	W14X109			SEE DETAILS 8 & 9/SS003
U-0.5	W8x31	1x10x14	(4) 3/4" DIA	A325 BOLTS
U-0.9	W14X43			SEE DETAILS 8 & 9/SS003
U-5.1	W14X211 BOXED COLUMN	1x24x24	(4) 1" DIA	
U-6.3	W14X211 BOXED COLUMN	1x24x24	(4) 1" DIA	
U-7.6	W14X211 BOXED COLUMN	1x24x24	(4) 1" DIA	
U-8.9	W14X211 BOXED COLUMN	1x24x24	(4) 1" DIA	
U-10.2	W14X211 BOXED COLUMN	1x24x24	(4) 1" DIA	
U.2-0.5	W14X68			SEE DETAILS 8 & 9/SS003
U.2-1.6	W14X68			SEE DETAILS 8 & 9/SS003
U.2-2.7	W14X68			SEE DETAILS 8 & 9/SS003
U.8-1.66	W8x31	1x10x14	(4) 3/4" DIA	A325 BOLTS
V-0.5	W14X109			SEE DETAILS 8 & 9/SS003
V-1.6	W14X90			SEE DETAILS 8 & 9/SS003
V-2.7	W14X68			SEE DETAILS 8 & 9/SS003
V.1-2.7	W8x31	1x10x14	(4) 3/4" DIA	A325 BOLTS
V.05-0.5	W8x31	1x10x14	(4) 3/4" DIA	A325 BOLTS
W-6.3	W14X211 BOXED COLUMN	1x24x24	(4) 1" DIA	
W-7.6	W14X211 BOXED COLUMN	1x24x24	(4) 1" DIA	
W-8.9	W14X211 BOXED COLUMN	1x24x24	(4) 1" DIA	
W-10.2	W14X211 BOXED COLUMN	1x24x24	(4) 1" DIA	
W.4-3.6	W8x31	3/4x14x14	(4) 3/4" DIA	
X(-5' - 0")-3.2	W14X109			SEE DETAILS 8 & 9/SS003
X.2-0.5	W14X109			SEE DETAILS 8 & 9/SS003
X.3(6' - 10")-1.6	W14X90			SEE DETAILS 8 & 9/SS003
X.3-1.66	W8X48	1x10x14	(4) 3/4" DIA	A325 BOLTS
X.3-3.2	W8x31	1x10x14	(4) 3/4" DIA	A325 BOLTS
Y-4.1	W8x31	3/4x14x14	(4) 3/4" DIA	
Z(10' - 0")-5.1	W14X193	1x24x24	(4) 1" DIA	SEE SECTION 1/SS303
Z(10' - 0")-6.3	W14X211 BOXED COLUMN	1x24x24	(6) 1" DIA	SEE SECTION 2/SS303
Z(10' - 0")-7.6	W14X211 BOXED COLUMN	1x24x24	(6) 1" DIA	SEE SECTION 5/SS301
Z(10' - 0")-8.9	W14X211 BOXED COLUMN	1x24x24	(6) 1" DIA	SEE SECTION 2/SS302
Z(10' - 0")-10.2	W14X211 BOXED COLUMN	1x24x24	(6) 1" DIA	SEE SECTION 1/SS301
Z-0.5	W14X109			SEE DETAILS 8 & 9/SS003
Z-1.6	W14X109			SEE DETAILS 8 & 9/SS003
Z-3.2	W14X109			SEE DETAILS 8 & 9/SS003
Z-4.1	W8X48	3/4x14x14	(4) 3/4" DIA	
Z-5.1	W10X60	1x12x12	(4) 3/4" DIA	A325 BOLTS, SEE DETAIL 7/SS302
Z-6.1	W10X60	1x12x12	(4) 3/4" DIA	A325 BOLTS, SEE DETAIL 14/SS401
Z-7.6	W10X60	1x12x12	(4) 3/4" DIA	A325 BOLTS, SEE DETAIL 2/SS301
Z-9.2	W10X60	1x12x12	(4) 3/4" DIA	A325 BOLTS, SEE DETAIL 14/SS401
Z-10.2	W10X60	1x12x12	(4) 3/4" DIA	A325 BOLTS, SEE DETAIL 1/SS302

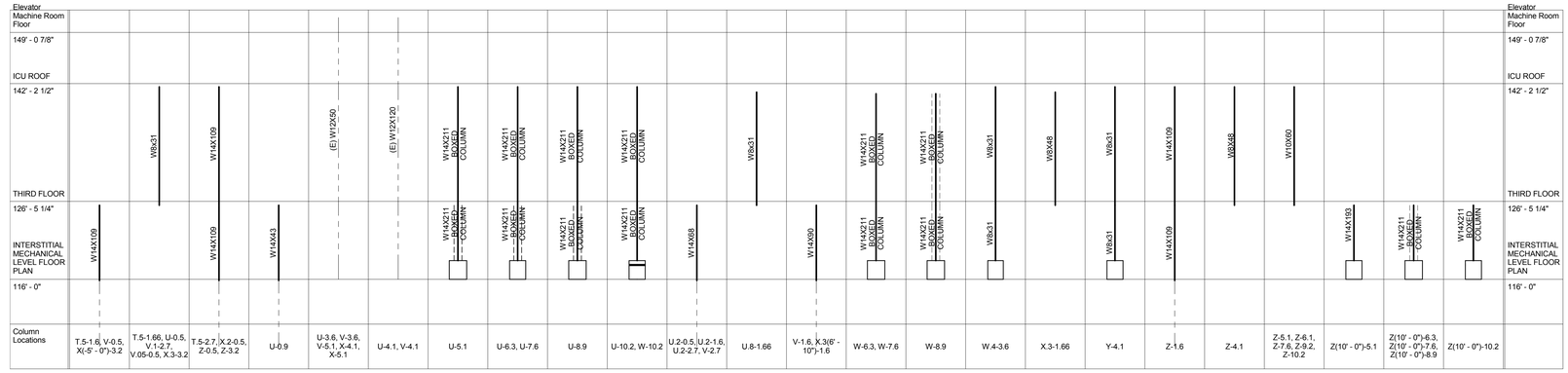

NOTE: SLOPING COLUMNS NOT SHOWN IN SCHEDULE. REF: PLANS AND DETAILS

COLUMN SCHEDULE
N.T.S

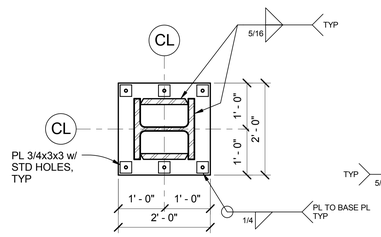

5 SS 401 TYPICAL BASE PLATE DETAIL AT BOXED COLS (UNO)
3/4" = 1'-0"

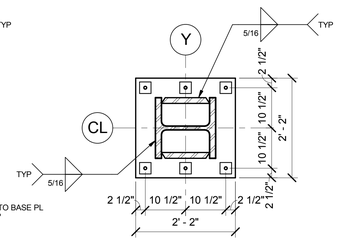

NOTE:
1. SEE DETAIL 2 & 3/SS 401 FOR BOXED COL ASSEMBLY

4 SS 401 BASE PLATE DETAIL AT BOXED COLS ON LINE "Y" (UNO)
3/4" = 1'-0"

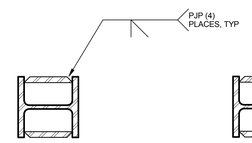

3 SS 401 SECTION
3/4" = 1'-0"

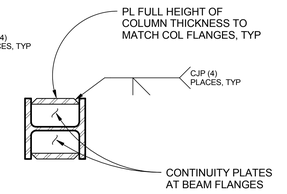

2 SS 401 SECTION
3/4" = 1'-0"

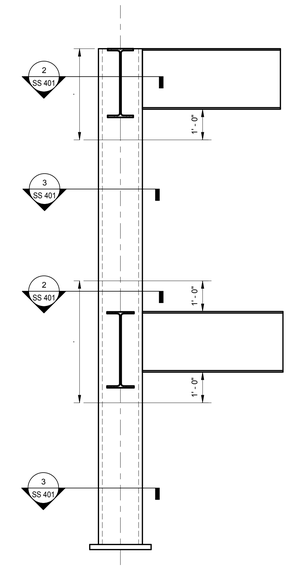

1 SS 401 TYPICAL BOXED COLUMN ELEVATION
1/2" = 1'-0"

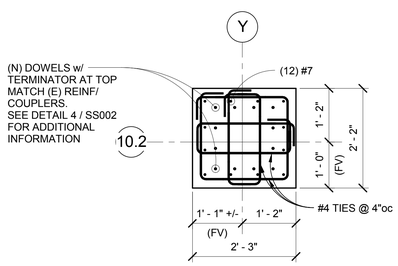

11 SS 401 DETAIL
3/4" = 1'-0"

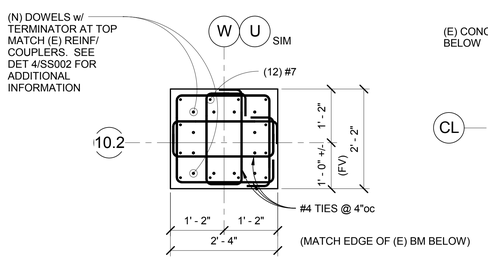

10 SS 401 DETAIL
3/4" = 1'-0"

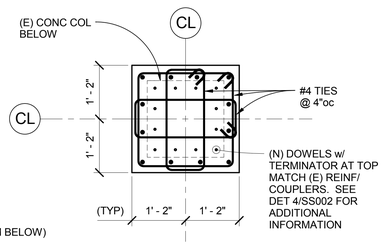

9 SS 401 TYPICAL PILASTER DETAIL
3/4" = 1'-0"

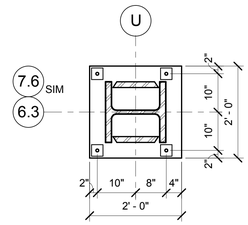

8 SS 401 SECTION
3/4" = 1'-0"

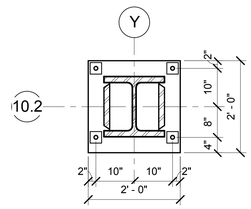

7 SS 401 SECTION
3/4" = 1'-0"

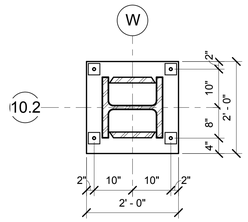

6 SS 401 SECTION
3/4" = 1'-0"

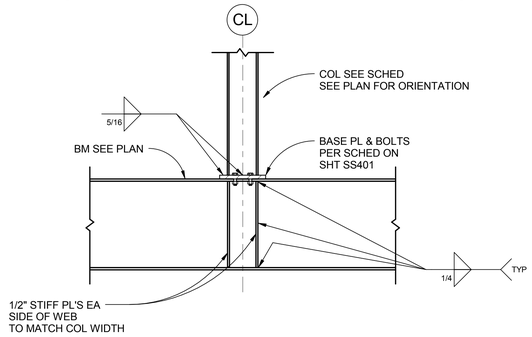

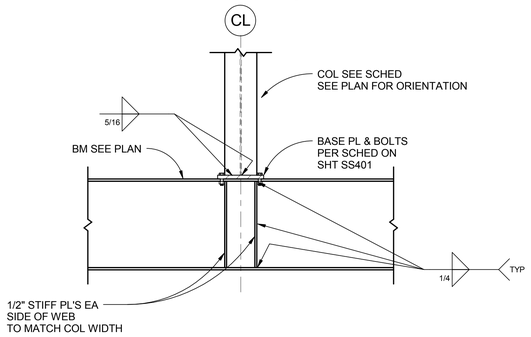

14 SS 401 TYP COL TO BM CONNECTION, UNO
3/4" = 1'-0"

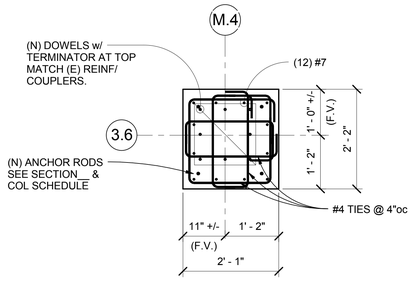

13 SS 401 DETAIL
3/4" = 1'-0"

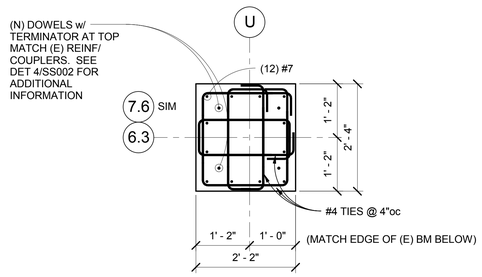

12 SS 401 DETAIL
3/4" = 1'-0"

FULLY SPRINKLERED
CONSTRUCTION DOCUMENTS

No.	Date	Revisions

CONSULTANTS:

MECHANICAL/ELECTRICAL:
KJWW ENGINEERING CONSULTANTS - ST. LOUIS
#15 SUNNEN DRIVE, SUITE 104
ST. LOUIS, MO 63141

PLUMBING:
303RD ENGINEERING GROUP, LLC
1935 ARSENAL STREET
ST. LOUIS, MO 63118

ESTIMATING:
KWAME BUILDING GROUP
1204 WASHINGTON AVE. SUITE 200
ST. LOUIS, MO 63103

LIFE SAFETY/FIRE PROTECTION:
CODE CONSULTANTS, INC.
2043 WOODLAND PARKWAY, SUITE 300
ST. LOUIS, MO 63146

ACOUSTICAL ENGINEERS:
ACOUSTICONTROL LLC
1709 WASHINGTON AVENUE, LOFT 300
ST. LOUIS, MO 63103

COMMISSIONING:
ZODIAC INTERNATIONAL
16100 CHESTERFIELD PARKWAY, SUITE 365
CHESTERFIELD, MO 63017

ENVIROMENTAL:
EVIRONMENTAL CONSULTANTS, LLC
#6 MEADOW HEIGHTS PROFESSIONAL PARK DR.
COLLINSVILLE, IL
62234

STRUCTURAL ENGINEER
kpff Consulting Engineers
1630 Des Peres Road, Suite 100
Saint Louis, MO 63131
(314) 835-0524 Fax (314) 835-0749
Mo. Certificate of Authority No. 2001010829

THIS MEDIA SHOULD NOT BE CONSIDERED A CERTIFIED DOCUMENT

ARCHITECT/ENGINEERS:

CHRISTNER
ARCHITECTS | DESIGNERS | PLANNERS | LANDSCAPE ARCHITECTS
168 N MERAMEC, SUITE 400 | ST. LOUIS, MISSOURI 63105
TEL 314 725 2927 | FAX 314 725 2928 | CHRISTNERINC.COM

The Professional Engineer whose personal seal and signature Appears on this page assumes responsibility only for what appears on this page and disclaims (pursuant to Section 327.411 RSMo) any responsibility for all other pages, plans, specifications, estimates, reports, or other documents or instruments not sealed by this Professional Engineer relating to, or intended to be used for, any part or parts of the engineering project to which this page refers.

Drawing Title: COLUMN SCHEDULE

Project Title: INTENSIVE CARE UNIT

Project Number: 110348.01
Building Number: #1

Location: HARRY S. TRUMAN VAMC

DIRECTOR OF SPECIALTY CARE	INFECTION CONTROL PRACTITIONER	CHIEF ENGINEER	ASSISTANT DIRECTOR	ASSOCIATE DIRECTOR OF PATIENT SERVICES	CHIEF OF STAFF	ASSOCIATE DIRECTOR	MEDICAL CENTER DIRECTOR

Date	Checked	Drawn	Approved
12/30/13	JM	TJR	LDS

Drawing Number: SS 401
Dwg. 79 of 201

Office of Construction and Facilities Management
Department of Veterans Affairs

VA FORM 08-6231 PRINTED ON ORIGINAL SIZE OF SHEET IS 30" X 42"

STEEL COLUMN BASE PLATE AND ANCHOR BOLT SCHEDULE

Column Location Mark	SIZE	BASE PLATE	ANCHOR BOLTS	COMMENTS
U-5.1	W14X211 BOXED COLUMN	1x24x24	(4) 1" DIA	
U-6.3	W14X211 BOXED COLUMN	1x24x24	(4) 1" DIA	
U-7.6	W14X211 BOXED COLUMN	1x24x24	(4) 1" DIA	
U-8.9	W14X211 BOXED COLUMN	1x24x24	(4) 1" DIA	
U-10.2	W14X211 BOXED COLUMN	1x24x24	(4) 1" DIA	
W-6.3	W14X211 BOXED COLUMN	1x24x24	(4) 1" DIA	
W-7.6	W14X211 BOXED COLUMN	1x24x24	(4) 1" DIA	
W-8.9	W14X211 BOXED COLUMN	1x24x24	(4) 1" DIA	
W-10.2	W14X211 BOXED COLUMN	1x24x24	(4) 1" DIA	
W.4-3.6	W8x31	3/4x14x14	(4) 3/4" DIA	
X.1-3.2	W8x31	3/4x9x10		A325 BOLTS, SEE DETAIL 14 / SS 401.4
X.2-3.2	W14X109			SEE DETAILS 8 & 9/SS003.4
X.3-3.2	W8x31	3/4x9x10	(4) 3/4" DIA	A325 BOLTS, SEE DETAIL 14 / SS 401.4
Y-4.1	W8x31	3/4x14x14	(4) 3/4" DIA	
Y-5.1	W14X193	1x24x24	(4) 1" DIA	SEE SECTION 1/SS303.4
Y-6.3	W14X211 BOXED COLUMN	1x24x24	(6) 1" DIA	SEE SECTION 2/SS303.4
Y-7.6	W14X211 BOXED COLUMN	1x24x24	(6) 1" DIA	SEE SECTION 5/SS301
Y-8.9	W14X211 BOXED COLUMN	1x24x24	(6) 1" DIA	SEE SECTION 2/SS302
Y-10.2	W14X211 BOXED COLUMN	1x24x24	(6) 1" DIA	SEE SECTION 1/SS301
Z-3.2	W14X109			SEE DETAILS 8 & 9/SS003.4
Z-4.1	W8X48	3/4x14x14	(4) 3/4" DIA	
Z-5.1	W10X60	1x12x12	(4) 3/4" DIA	A325 BOLTS, SEE DETAIL 7/SS302
Z-6.1	W10X60	1x12x12	(4) 3/4" DIA	A325 BOLTS, SEE DETAIL 14/SS401.4
Z-7.6	W10X60	1x12x12	(4) 3/4" DIA	A325 BOLTS, SEE DETAIL 2/SS301
Z-9.2	W10X60	1x12x12	(4) 3/4" DIA	A325 BOLTS, SEE DETAIL 14/SS401.4
Z-10.2	W10X60	1x12x12	(4) 3/4" DIA	A325 BOLTS, SEE DETAIL 1/SS302

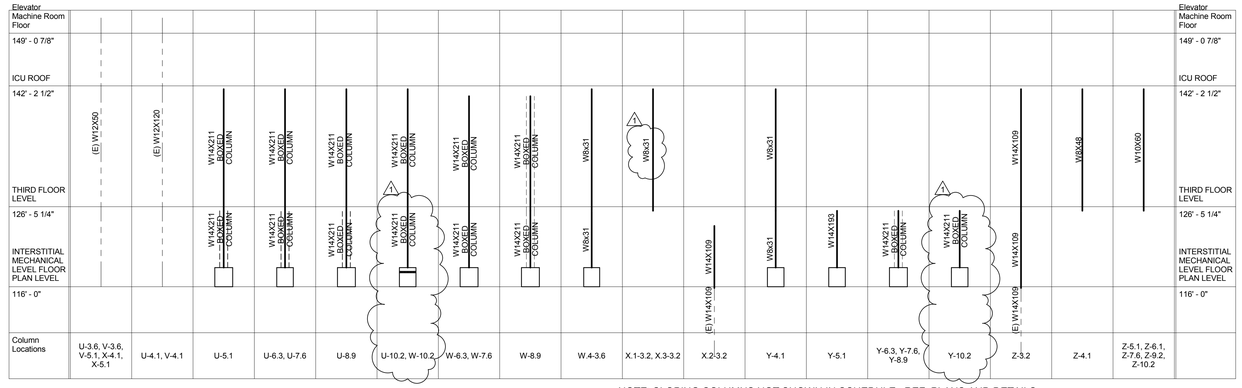

NOTE: SLOPING COLUMNS NOT SHOWN IN SCHEDULE. REF: PLANS AND DETAILS

COLUMN SCHEDULE
N.T.S

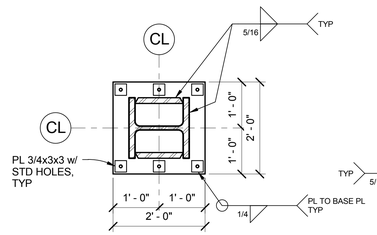

5 SS 401.4 TYPICAL BASE PLATE DETAIL AT BOXED COLS (UNO)
3/4" = 1'-0"

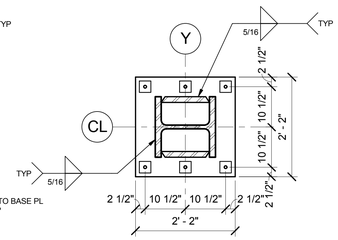

NOTE:
1. SEE DETAIL 2 & 3/SS 401 FOR BOXED COL ASSEMBLY

4 SS 401.4 BASE PLATE DETAIL AT BOXED COLS ON LINE "Y" (UNO)
3/4" = 1'-0"

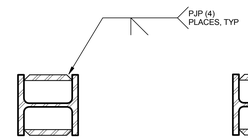

3 SS 401.4 SECTION
3/4" = 1'-0"

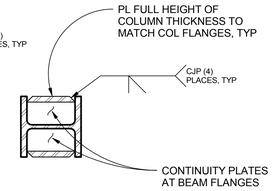

2 SS 401.4 SECTION
3/4" = 1'-0"

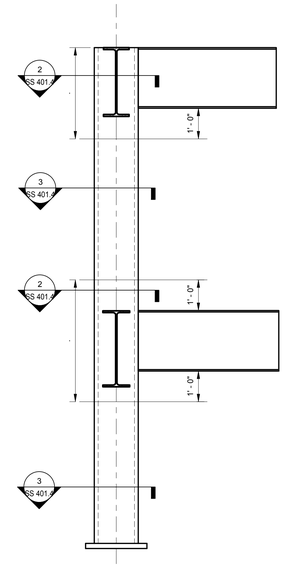

1 SS 401.4 TYPICAL BOXED COLUMN ELEVATION
1/2" = 1'-0"

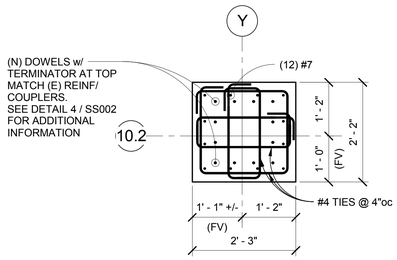

11 SS 401.4 DETAIL
3/4" = 1'-0"

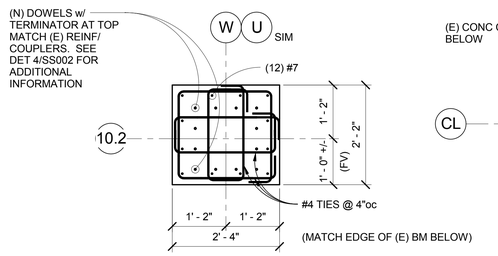

10 SS 401.4 DETAIL
3/4" = 1'-0"

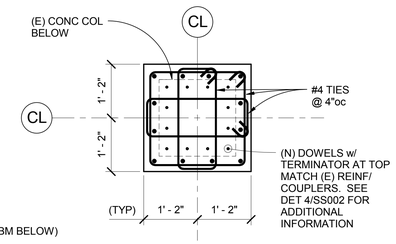

9 SS 401.4 TYPICAL PILASTER DETAIL
3/4" = 1'-0"

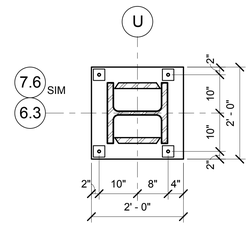

8 SS 401.4 SECTION
3/4" = 1'-0"

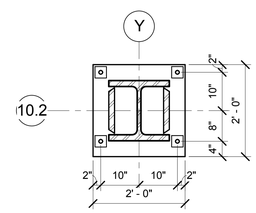

7 SS 401.4 SECTION
3/4" = 1'-0"

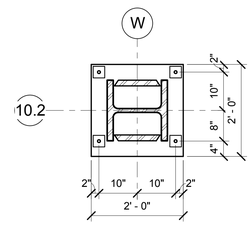

6 SS 401.4 SECTION
3/4" = 1'-0"

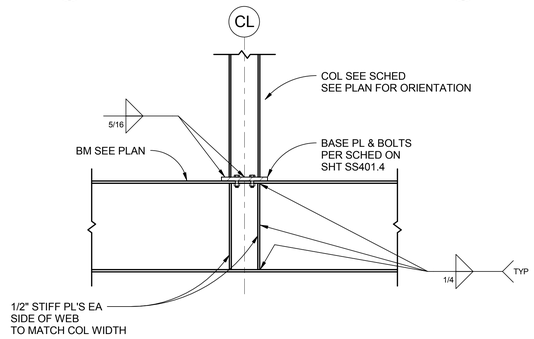

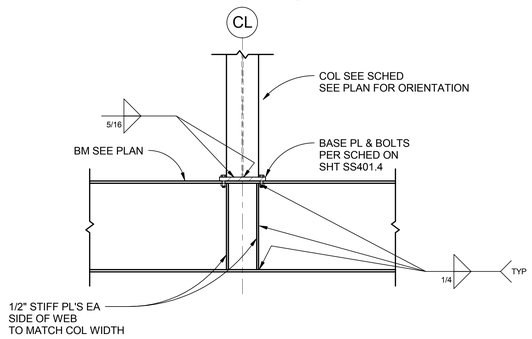

14 SS 401.4 TYP COL TO BM CONNECTION, UNO
3/4" = 1'-0"

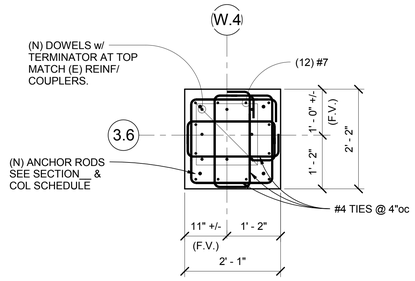

13 SS 401.4 DETAIL
3/4" = 1'-0"

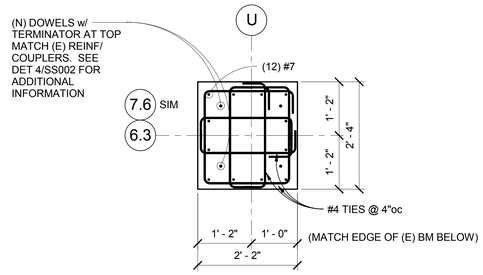

12 SS 401.4 DETAIL
3/4" = 1'-0"

FULLY SPRINKLERED
CONSTRUCTION DOCUMENTS

No.	Date	Revisions
1	1/14/15	Amendment #4

CONSULTANTS:

MECHANICAL/ELECTRICAL:
KJWW ENGINEERING CONSULTANTS - ST. LOUIS
#15 SUNNEN DRIVE, SUITE 104
ST. LOUIS, MO 63141

PLUMBING:
303RD ENGINEERING GROUP, LLC
1935 ARSENAL STREET
ST. LOUIS, MO 63118

ESTIMATING:
KWAME BUILDING GROUP
1204 WASHINGTON AVE. SUITE 200
ST. LOUIS, MO 63103

LIFE SAFETY/FIRE PROTECTION:
CODE CONSULTANTS, INC.
2043 WOODLAND PARKWAY, SUITE 300
ST. LOUIS, MO 63146

ACOUSTICAL ENGINEERS:
ACOUSTICONTROL LLC
1709 WASHINGTON AVENUE, LOFT 300
ST. LOUIS, MO 63103

COMMISSIONING:
ZODIAC INTERNATIONAL
16100 CHESTERFIELD PARKWAY, SUITE 365
CHESTERFIELD, MO 63017

ENVIROMENTAL:
EVIRONMENTAL CONSULTANTS, LLC
#6 MEADOW HEIGHTS PROFESSIONAL PARK DR.
COLLINSVILLE, IL
62234

STRUCTURAL ENGINEER
kpff Consulting Engineers
1630 Des Peres Road, Suite 100
Saint Louis, MO 63131
(314) 835-0524 Fax (314) 835-0749
Mo. Certificate of Authority No. 2001010829

THIS MEDIA SHOULD NOT BE CONSIDERED A CERTIFIED DOCUMENT

ARCHITECT/ENGINEERS:

CHRISTNER
ARCHITECTS | DESIGNERS | PLANNERS | LANDSCAPE ARCHITECTS
168 N MERAMEC, SUITE 400 | ST. LOUIS, MISSOURI 63105
TEL 314 725 2927 | FAX 314 725 2928 | CHRISTNERINC.COM

The Professional Engineer whose personal seal and signature Appears on this page assumes responsibility only for what appears on this page and disclaims (pursuant to Section 327.411 RSMo) any responsibility for all other pages, plans, specifications, estimates, reports, or other documents or instruments not sealed by this Professional Engineer relating to, or intended to be used for, any part or parts of the engineering project to which this page refers.

Drawing Title: COLUMN SCHEDULE DEDUCT ALTERNATES 4,5

Project Title: INTENSIVE CARE UNIT

Project Number: 110348.01

Building Number: #1

DIRECTOR OF SPECIALTY CARE | INFECTION CONTROL PRACTITIONER | CHIEF ENGINEER | ASSISTANT DIRECTOR | ASSOCIATE DIRECTOR OF PATIENT SERVICES | CHIEF OF STAFF | ASSOCIATE DIRECTOR | MEDICAL CENTER DIRECTOR

Location: HARRY S. TRUMAN VAMC

Date	Checked	Drawn	Approved
9/4/14	JM	TJR	LDS

Drawing Number: SS 401.4

Dwg.113 of 201

Office of Construction and Facilities Management

Department of Veterans Affairs

VA FORM 08-6231 PRINTED ON ORIGINAL SIZE OF SHEET IS 30" X 42"

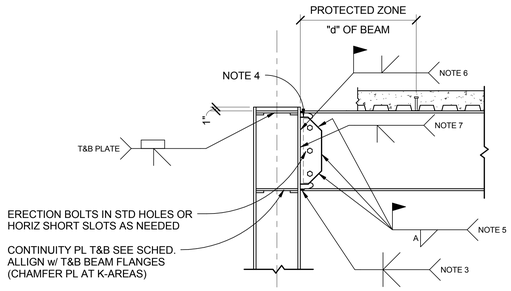

4 SS 402 SMF CONNECTION AT ROOF LEVEL
N.T.S.

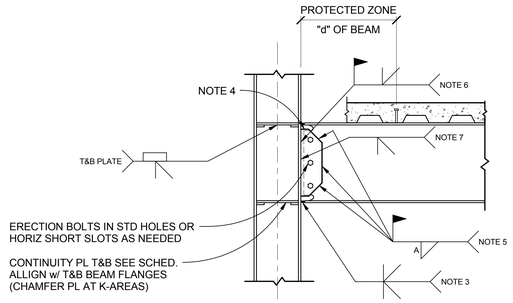

3 SS 402 SMF CONNECTION AT FLOOR LEVEL
N.T.S.

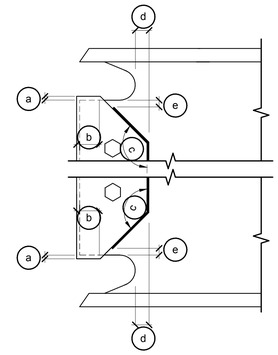

NOTES

a 1/4" MINIMUM, 1/2" MAXIMUM.
b 1" MINIMUM
c 30 DEGREES (+/- 10 DEGREES)
d 2" MINIMUM
e 1/2" MINIMUM DISTANCE, 1" MAXIMUM DISTANCE, FROM END OF FILLET WELD TO EDGE OF WELD ACCESS HOLE

NOTE:
TOLERANCES SHALL NOT ACCUMULATE TO THE EXTENT THAT THE ANGLE OF THE ACCESS HOLE CUT TO THE FLANGE SURFACE EXCEEDS 25 DEG.

2 SS 402 SMF CONNECTION SHEAR PLATE DETAIL
N.T.S.

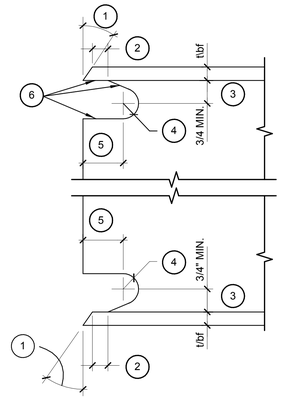

NOTES

1 BEVEL AS REQUIRED BY AWS D1.1 FOR SELECTED GROOVE WELD PROCEDURE.
2 LARGER OF t/bf OR 1/2". (PLUS 1/2 t/bf, OR MINUS 1/4 t/bf.)
3 3/4" t/bf TO t/bf, 3/4" MINIMUM (+/- 1/4").
4 3/8" MINIMUM RADIUS (PLUS NOT LIMITED, OR MINUS 0).
5 3 t/bf. (+/- 1/2").
6 SEE AISC 341-05, RECOMMENDED SPECIFICATIONS AND QUALITY ASSURANCE GUIDELINES FOR STEEL MOMENT-FRAME CONSTRUCTION FOR SEISMIC APPLICATIONS FOR FABRICATION DETAILS INCLUDING CUTTING METHODS AND SMOOTHNESS REQUIREMENTS.

NOTE:
TOLERANCES SHALL NOT ACCUMULATE TO THE EXTENT THAT THE ANGLE OF THE ACCESS HOLE CUT TO THE FLANGE SURFACE EXCEEDS 25 DEG.

1 SS 402 SMF CONNECTION WELD ACCESS HOLES DETAIL
N.T.S.

BEAM TO BEAM MOMENT CONNECTON SCHEDULE

BEAM SIZE	TYPE	TOP PLATE	BOTTOM PLATE	NOTE
W 14x22	A	PL 3/4 x 4 1/2 x 2'-3"	PL 3/4 x 5 1/2 x 9	
W 14x22	B	PL 3/4 x 4 1/2 x 2'-3"	PL 3/4 x 4 1/2 x 2'-3"	
W 16x31	B	PL 3/4 x 5 x 2'-7"	PL 3/4 x 6 1/2 x 2'-7"	
W 18x35	A	PL 3/4 x 5 1/2 x 2'-10"	PL 3/4 x 6 1/2 x 1'-2"	
W 21x44	B	PL 1 x 6 x 2'-10"	PL 1 x 7 x 2'-10"	
W 24x55	B	PL 1 x 6 1/2 x 4'-0"	PL 1 x 7 1/2 x 4'-0"	
W 24x76	B	PL 1 1/4 x 8 1/2 x 4'-8"	PL 1 1/4 x 9 1/2 x 4'-8"	5/16 WELD

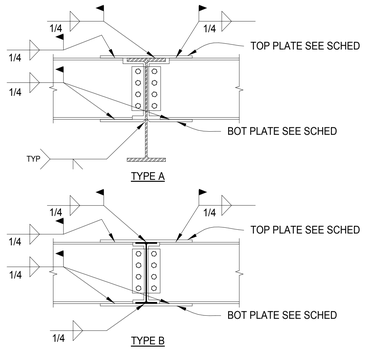

10 SS 402 TYPICAL BEAM TO BEAM MOMENT CONNECTION DETAIL
12" = 1'-0"

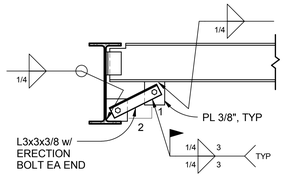

6 SS 402 TYPICAL MOMENT FRAME BOTTOM FLANGE BRACING
N.T.S.

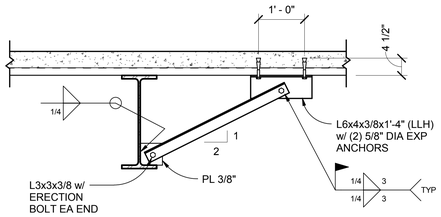

5 SS 402 TYPICAL MOMENT FRAME BOTTOM FLANGE BRACING AT SLAB
N.T.S.

GENERAL NOTES FOR SEISMIC FORCE RESISTING SYSTEM SMF:

1. CONNECTION DETAIL IS FOR A PREQUALIFIED WELDED UNREINFORCED FLANGE-WELDED WEB (WUF-W) MOMENT CONNECTION PER SUPPLEMENT NO. 1 TO ANSI/AISC 358-05 AND SHALL CONFORM TO THE REQUIREMENTS OF THAT STANDARD AS WELL AS ANSI/AISC 341-05 AS APPLICABLE.
2. THE PROTECTED ZONE SHALL CONFORM TO ALL OF THE REQUIREMENTS OF SECTION 7.4 OF ANSI/AISC 341-05. SPECIFICALLY NO SHEAR STUDS SHALL BE WELDED TO THE TOP OF THE FLANGE WITHIN THE PROTECTED ZONE.
3. BEAM FLANGES SHALL BE CONNECTED TO COLUMN FLANGES USING COMPLETE-JOINT-PENETRATION GROOVE WELDS CONFORMING TO THE REQUIREMENTS FOR DEMAND CRITICAL WELDS IN SECTION 7.3 AND APPENDIX W OF AISC 341-05.
4. WELD ACCESS HOLE GEOMETRY SHALL CONFORM TO THE REQUIREMENTS OF AWS D1.8 SECTION 6.9.1.2. WELD ACCESS HOLE REQUIREMENTS SHALL CONFORM OF THE REQUIREMENTS OF AWS D1.8 SECTION 6.9.2. SEE SMRF MOMENT CONNECTION WELD ACCESS HOLE DETAIL.
5. WELD OF THE SINGLE PLATE TO THE BEAM WEB SHALL EXTEND ALONG THE SLOPED TOP AND BOTTOM PORTIONS AS WELL AS THE FULL SINGLE PLATE HEIGHT. THE WELDS ON THE SLOPED TOP AND BOTTOM PORTIONS OF THE SINGLE PLATE SHALL BE TERMINATED AT LEAST 1/2", BUT NO MORE THAN 1" FROM THE EDGE OF THE WELD ACCESS HOLE.
6. CJP WELD OF THE BEAM WEB TO COLUMN FLANGE SHALL BE PROVIDED OVER THE FULL LENGTH OF THE WEB BETWEEN WELD ACCESS HOLES. THE WELD SHALL CONFORM TO THE REQUIREMENTS FOR DEMAND CRITICAL WELDS IN SECTION 7.3 AND APPENDIX W OF AISC 341-05. WELD TABS ARE NOT REQUIRED. IF WELD TABS ARE USED, THEY MUST BE REMOVED AFTER WELDING IN ACCORDANCE WITH SECTION 3.4 OF ANSI/AISC 358-05.
7. CJP WELD OF SINGLE PLATE TO COLUMN FLANGE. TERMINATE WELD AT LEAST 1/2" BUT NOT MORE THAN 1" FROM EDGE OF WELD ACCESS HOLE.

SMF CONNECTON SCHEDULE

BEAM SIZE	SINGLE PLATE THICKNESS	WELD SIZE "A"	CONTINUITY PLATE THICKNESS	BOTTOM FLANGE BRACE SPACING
W 24x55	1/2"	7/16"	5/8"	7'-0" o.c.
W 24x62	1/2"	7/16"	5/8"	7'-0" o.c.
W 24x68	1/2"	7/16"	5/8"	7'-0" o.c.
W 24x76	5/8"	9/16"	3/4"	7'-0" o.c.
W 27x84	5/8"	9/16"	3/4"	7'-0" o.c.
W 30x90	5/8"	9/16"	3/4"	7'-0" o.c.

FULLY SPRINKLERED
CONSTRUCTION DOCUMENTS

No.	Date	Revisions

CONSULTANTS:

MECHANICAL/ELECTRICAL:
KJWW ENGINEERING CONSULTANTS - ST. LOUIS
#15 SUNNEN DRIVE, SUITE 104
ST. LOUIS, MO 63141

PLUMBING:
303RD ENGINEERING GROUP, LLC
1935 ARSENAL STREET
ST. LOUIS, MO 63118

ESTIMATING:
KWAME BUILDING GROUP
1204 WASHINGTON AVE. SUITE 200
ST. LOUIS, MO 63103

LIFE SAFETY/FIRE PROTECTION:
CODE CONSULTANTS, INC.
2043 WOODLAND PARKWAY, SUITE 300
ST. LOUIS, MO 63146

ACOUSTICAL ENGINEERS:
ACOUSTICONTROL LLC
1709 WASHINGTON AVENUE, LOFT 300
ST. LOUIS, MO 63103

COMMISSIONING:
ZODIAC INTERNATIONAL
16100 CHESTERFIELD PARKWAY, SUITE 365
CHESTERFIELD, MO 63017

ENVIROMENTAL:
EVIRONMENTAL CONSULTANTS, LLC
#6 MEADOW HEIGHTS PROFESSIONAL PARK DR.
COLLINSVILLE, IL
62234

STRUCTURAL ENGINEER
kpff Consulting Engineers
1630 Des Peres Road, Suite 100
Saint Louis, MO 63131
(314) 835-0524 Fax (314) 835-0749
Mo. Certificate of Authority No. 2001010829

THIS MEDIA SHOULD NOT BE CONSIDERED A CERTIFIED DOCUMENT

ARCHITECT/ENGINEERS:

CHRISTNER
ARCHITECTS | DESIGNERS | PLANNERS | LANDSCAPE ARCHITECTS
168 N MERAMEC, SUITE 400 | ST. LOUIS, MISSOURI 63105
TEL 314 725 2927 | FAX 314 725 2928 | CHRISTNERINC.COM

The Professional Engineer whose personal seal and signature Appears on this page assumes responsibility only for what appears on this page and disclaims (pursuant to Section 327.411 RSMo) any responsibility for all other pages, plans, specifications, estimates, reports, or other documents or instruments not sealed by this Professional Engineer relating to, or intended to be used for, any part or parts of the engineering project to which this page refers.

DIRECTOR OF SPECIALTY CARE | DIRECTOR INFECTION CONTROL PRACTITIONER | CHIEF ENGINEER | ASSISTANT DIRECTOR | ASSOCIATE DIRECTOR OF PATIENT SERVICES | CHIEF OF STAFF | ASSOCIATE DIRECTOR | MEDICAL SERVICE DIRECTOR

Drawing Title: MOMENT CONNECTION DETAILS

Project Title: INTENSIVE CARE UNIT

Project Number: 110348.01

Building Number: #1

Location: HARRY S. TRUMAN VAMC

Date	Checked	Drawn	Approved
12/30/13	JM	TJR	LDS

Drawing Number: SS 402
Dwg. 80 of 201

Office of Construction and Facilities Management
Department of Veterans Affairs

VA FORM 08-6231 PRINTED ON ORIGINAL SIZE OF SHEET IS 30" X 42"

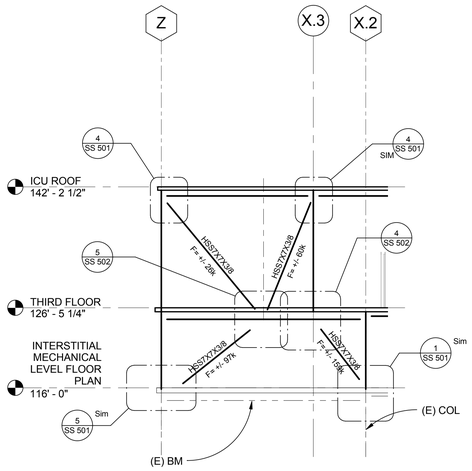

NOTE: DESIGN CONNECTIONS FOR FACTORED BRACE LOADS INDICATED

VB-4 / SS 501 VB-4 1/8" = 1'-0"

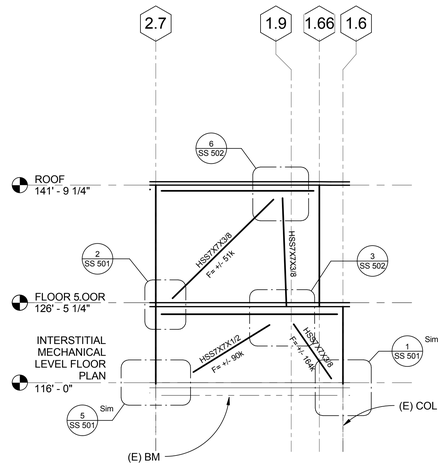

NOTE: DESIGN CONNECTIONS FOR FACTORED BRACE LOADS INDICATED

VB-3 / SS 501 VB-3 1/8" = 1'-0"

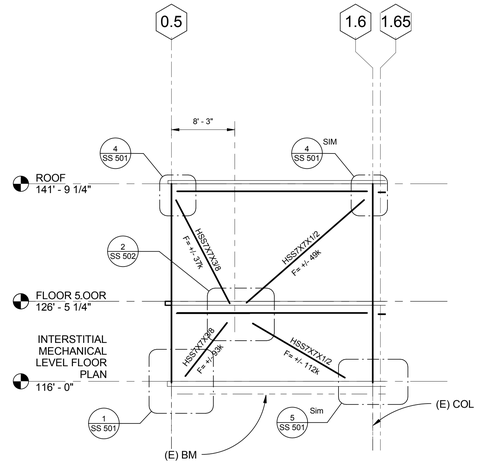

NOTE: DESIGN CONNECTIONS FOR FACTORED BRACE LOADS INDICATED

VB-2 / SS 501 VB-2 1/8" = 1'-0"

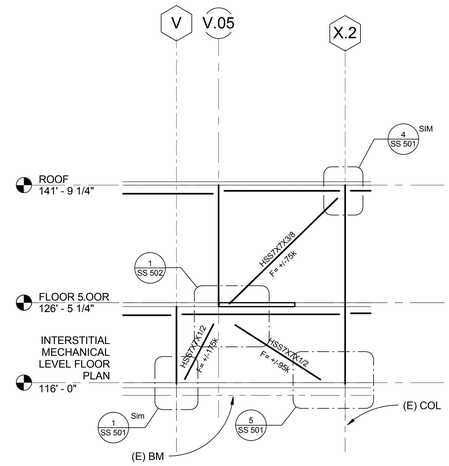

NOTE: DESIGN CONNECTIONS FOR FACTORED BRACE LOADS INDICATED

VB-1 / SS 501 VB-1 1/8" = 1'-0"

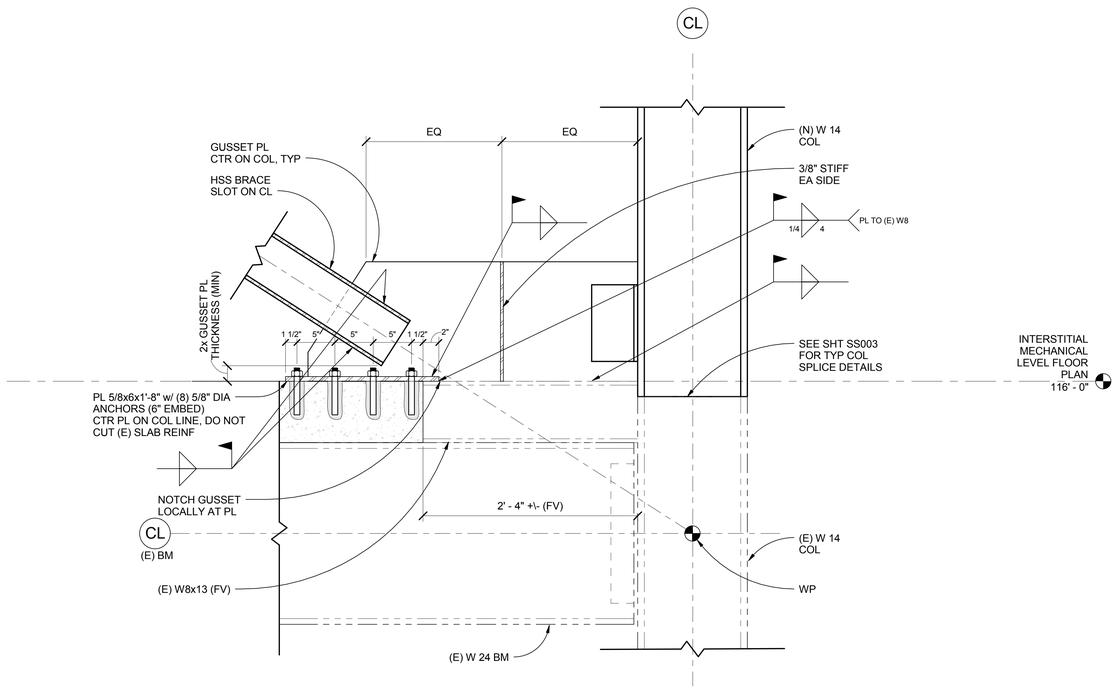

5 / SS 501 VERTICAL BRACE CONNECTION AT EXIST BM AND COLUMN DETAIL
1 1/2" = 1'-0"

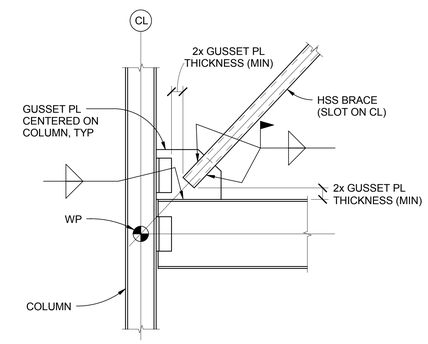

2 / SS 501 VERTICAL BRACE CONNECTION AT BEAM AND COLUMN DETAIL
3/4" = 1'-0"

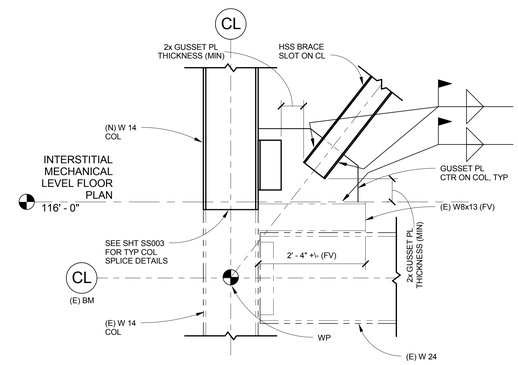

1 / SS 501 VERTICAL BRACE CONNECTION AT EXIST BM AND COLUMN DETAIL
3/4" = 1'-0"

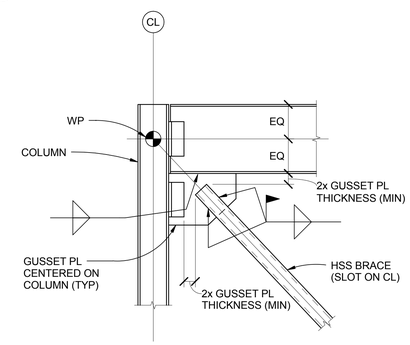

4 / SS 501 VERTICAL BRACE CONNECTION AT TOP OF COLUMN DETAIL
3/4" = 1'-0"

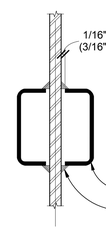

NOTE:
IF THE GAP BETWEEN THE GUSSET PL AND THE HSS BRACE EXCEEDS 1/16", THE REQD WELD SIZE MUST BE INCREASED BY 1/8"

3 / SS 501 TYPICAL HSS BRACE SLOT AT GUSSET PLATE
3/4" = 1'-0"

FULLY SPRINKLERED
CONSTRUCTION DOCUMENTS

No.	Date	Revisions

CONSULTANTS:

MECHANICAL/ELECTRICAL:
KJWW ENGINEERING CONSULTANTS - ST. LOUIS
#15 SUNNEN DRIVE, SUITE 104
ST. LOUIS, MO 63141

PLUMBING:
303RD ENGINEERING GROUP, LLC
1935 ARSENAL STREET
ST. LOUIS, MO 63118

ESTIMATING:
KWAME BUILDING GROUP
1204 WASHINGTON AVE. SUITE 200
ST. LOUIS, MO 63103

LIFE SAFETY/FIRE PROTECTION:
CODE CONSULTANTS, INC.
2043 WOODLAND PARKWAY, SUITE 300
ST. LOUIS, MO 63146

ACOUSTICAL ENGINEERS:
ACOUSTICONTROL LLC
1709 WASHINGTON AVENUE, LOFT 300
ST. LOUIS, MO 63103

COMMISSIONING:
ZODIAC INTERNATIONAL
16100 CHESTERFIELD PARKWAY, SUITE 365
CHESTERFIELD, MO 63017

ENVIROMENTAL:
EVIRONMENTAL CONSULTANTS, LLC
#6 MEADOW HEIGHTS PROFESSIONAL PARK DR.
COLLINSVILLE, IL
62234

STRUCTURAL ENGINEER
kpff Consulting Engineers
1630 Des Peres Road, Suite 100
Saint Louis, MO 63131
(314) 835-0524 Fax (314) 835-0749
Mo. Certificate of Authority No. 2001010829

THIS MEDIA SHOULD NOT BE CONSIDERED A CERTIFIED DOCUMENT

ARCHITECT/ENGINEERS:

CHRISTNER
ARCHITECTS | DESIGNERS | PLANNERS | LANDSCAPE ARCHITECTS
168 N MERAMEC, SUITE 400 | ST. LOUIS, MISSOURI 63105
TEL 314 725 2927 | FAX 314 725 2928 | CHRISTNERINC.COM

The Professional Engineer whose personal seal and signature Appears on this page assumes responsibility only for what appears on this page and disclaims (pursuant to Section 327.411 RSMo) any responsibility for all other pages, plans, specifications, estimates, reports, or other documents or instruments not sealed by this Professional Engineer relating to, or intended to be used for, any part or parts of the engineering project to which this page refers.

DIRECTOR OF SPECIALTY CARE	INFECTION CONTROL PRACTITIONER	CHIEF ENGINEER	ASSISTANT DIRECTOR	ASSOCIATE DIRECTOR OF PATIENT SERVICES	CHIEF OF STAFF	ASSOCIATE DIRECTOR	MEDICAL CENTER DIRECTOR

Drawing Title: VERTICAL BRACING ELEVATIONS

Project Title: INTENSIVE CARE UNIT

Project Number: 110348.01

Building Number: #1

Location: HARRY S. TRUMAN VAMC

Date	Checked	Drawn	Approved
12/30/13	SRH	TJR	LDS

Drawing Number: SS 501

Dwg. 81 of 201

Office of Construction and Facilities Management

Department of Veterans Affairs

VA FORM 08-6231 PRINTED ON ORIGINAL SIZE OF SHEET IS 30" X 42"

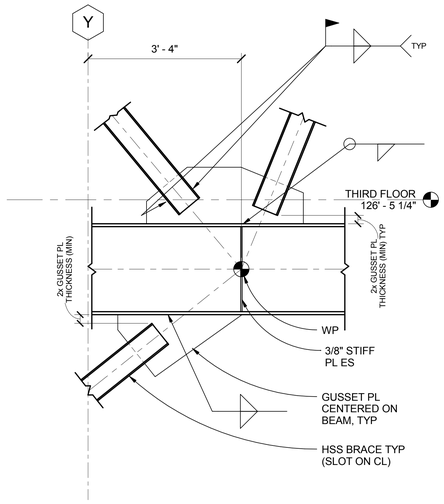

5 SS 502 VERTICAL BRACE DETAIL
3/4" = 1'-0"

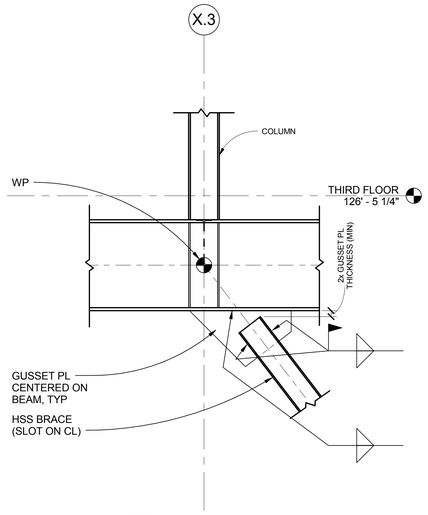

4 SS 502 VERTICAL BRACE DETAIL
3/4" = 1'-0"

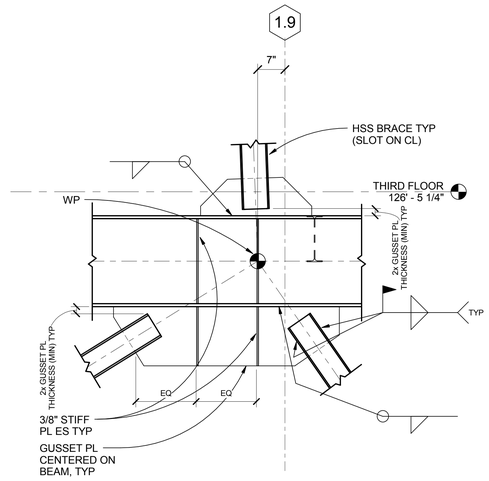

3 SS 502 VERTICAL BRACE DETAIL
3/4" = 1'-0"

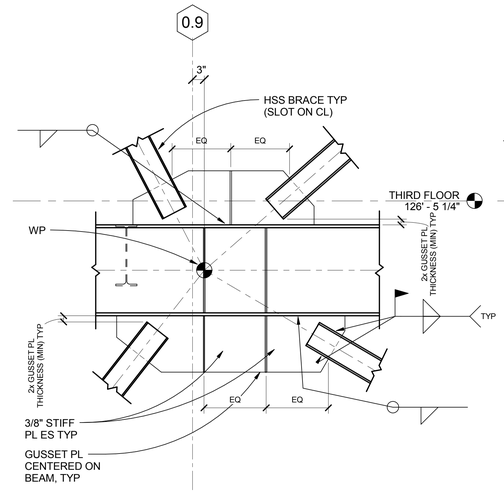

2 SS 502 VERTICAL BRACE DETAIL
3/4" = 1'-0"

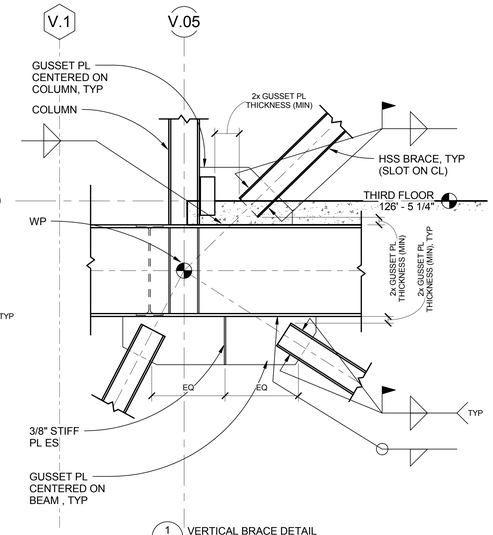

1 SS 502 VERTICAL BRACE DETAIL
3/4" = 1'-0"

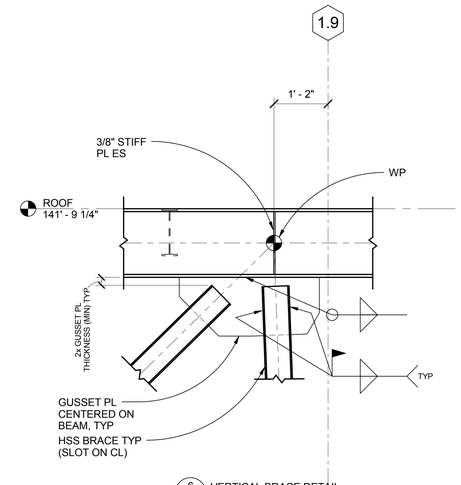

6 SS 502 VERTICAL BRACE DETAIL
3/4" = 1'-0"

FULLY SPRINKLERED
CONSTRUCTION DOCUMENTS

No.	Date	Revisions

CONSULTANTS:

MECHANICAL/ELECTRICAL:
KJWW ENGINEERING CONSULTANTS - ST. LOUIS
#15 SUNNEN DRIVE, SUITE 104
ST. LOUIS, MO 63141

PLUMBING:
303RD ENGINEERING GROUP, LLC
1935 ARSENAL STREET
ST. LOUIS, MO 63118

ESTIMATING:
KWAME BUILDING GROUP
1204 WASHINGTON AVE. SUITE 200
ST. LOUIS, MO 63103

LIFE SAFETY/FIRE PROTECTION:
CODE CONSULTANTS, INC.
2043 WOODLAND PARKWAY, SUITE 300
ST. LOUIS, MO 63146

ACOUSTICAL ENGINEERS:
ACOUSTICONTROL LLC
1709 WASHINGTON AVENUE, LOFT 300
ST. LOUIS, MO 63103

COMMISSIONING:
ZODIAC INTERNATIONAL
16100 CHESTERFIELD PARKWAY, SUITE 365
CHESTERFIELD, MO 63017

ENVIROMENTAL:
EVIRONMENTAL CONSULTANTS, LLC
#6 MEADOW HEIGHTS PROFESSIONAL PARK DR.
COLLINSVILLE, IL
62234

STRUCTURAL ENGINEER
kpff Consulting Engineers
1630 Des Peres Road, Suite 100
Saint Louis, MO 63131
(314) 835-0524 Fax (314) 835-0749
Mo. Certificate of Authority No. 2001010829

THIS MEDIA SHOULD NOT BE CONSIDERED A CERTIFIED DOCUMENT

ARCHITECT/ENGINEERS:

CHRISTNER
ARCHITECTS | DESIGNERS | PLANNERS | LANDSCAPE ARCHITECTS
168 N MERAMEC, SUITE 400 | ST. LOUIS, MISSOURI 63105
TEL 314 725 2927 | FAX 314 725 2928 | CHRISTNERINC.COM

The Professional Engineer whose personal seal and signature Appears on this page assumes responsibility only for what appears on this page and disclaims (pursuant to Section 327.411 RSMo) any responsibility for all other pages, plans, specifications, estimates, reports, or other documents or instruments not sealed by this Professional Engineer relating to, or intended to be used for, any part or parts of the engineering project to which this page refers.

Drawing Title
VERTICAL BRACING DETAILS

DIRECTOR OF SPECIALTY CARE	INFECTION CONTROL PRACTITIONER	CHIEF ENGINEER	ASSISTANT DIRECTOR	ASSOCIATE DIRECTOR OF PATIENT SERVICES	CHIEF OF STAFF	ASSOCIATE DIRECTOR	MEDICAL CENTER DIRECTOR

Project Title
INTENSIVE CARE UNIT

Location
HARRY S. TRUMAN VAMC

Date	Checked	Drawn	Approved
12/30/13	JM	AIS	LDS

Project Number
110348.01

Building Number
#1

Drawing Number
SS 502
Dwg. 82 of 201

Office of Construction and Facilities Management
Department of Veterans Affairs

VA FORM 08-6231 PRINTED ON ORIGINAL SIZE OF SHEET IS 30" X 42"

PLUMBING ABBREVIATIONS

AAP	AREA ALARM PANEL
A/E	ARCHITECT / ENGINEER
AD	AREA DRAIN
AF	ABOVE FINISH FLOOR
AF	ABOVE FINISH GRADE
AG	AIR GAP
AP	ACCESS PANEL
ASD	AUTOMATIC SPRINKLER DRAIN
ASHRAE	AMERICAN SOCIETY HEATING, REFRIGERATION, AIR CONDITIONING ENGINEERS
ASME	AMERICAN SOCIETY MECHANICAL ENGINEERS
ASPE	AMERICAN SOCIETY PLUMBING ENGINEERS
ASR	AUTOMATIC SPRINKLER RISER
BFP	REDUCED PRESSURE BACKFLOW PREVENTER
BHP	BREAK HORSEPOWER
BSP	BLACK STEEL PIPE
BTU	BRITISH THERMAL UNIT
BTUH	BRITISH THERMAL UNIT PER HOUR
C	CELSIUS
CGA	COMPRESSED GAS ASSOCIATION
CI	CAST IRON
CO	CLEANOUT
CS	CLINICAL SINK
CV	CONTROL VALVE
CW	COLD WATER
DA	DENTAL AIR
DV	DENTAL VACUUM
DAC	DENTAL AIR COMPRESSOR
DCW	DOMESTIC COLD WATER
DHW	DOMESTIC HOT WATER
DHWR	DOMESTIC HOT WATER RETURN
DHWR	DOMESTIC WATER RETURN
DHWS	DOMESTIC HOT WATER SUPPLY
DI	DEIONIZED WATER
DN	DOWN
DOE	DEPARTMENT OF ENERGY
DS	DOWNSPOUT
DW	DISHWASHER
DWG	DRAWING
DWH	DOMESTIC WATER HEATER
DWV	DRAIN WASTE VENT
EL	ELEVATION
EMCS	ENERGY MONOSERRAT AND CENTRAL SYSTEM
EPA	ENVIROMENTAL PROTECTION AGENCY
EPACT	ENERGY POLICY ACT
ESC	ESCUTCHEON
ESH	EMERGENCY SHOWER
ET	EXPANSION TANK
EWC	ELECTRIC WATER COOLER
EWH	ELECTRIC WATER HEATER
EWS	EYE WASH STATION
EX	EXISTING
F	FAHRENHEIT
FCO	FLOOR CLEANOUT
FCW	FILTERED COLD WATER
FD	FLOOR DRAIN
FDC	FIRE DEPARTMENT (HOSE) CONNECTION
FM	FLOW METER
FOP	FUEL OIL PUMP
FOR	FUEL OIL RETURN
FOS	FUEL OIL SUPPLY
FOV	FUEL OIL VENT
FS	FLOOR SINK
FS	FLOW SWITCH
FU	FIXTURE UNITS
GAL	GALLON
GCO	GRADE CLEANOUTS
GPD	GALLONS PER DAY
GPH	GALLONS PER HOUR
GPM	GALLONS PER MINUTE
GPR	GAS PRESSURE REGULATOR
GRS	GAS REGULATOR STATION
GT	GREASE TRAP
GVTR	GAS VENT THROUGH ROOF
GWH	GAS FIRED WATER HEATER
HW	HOT WATER
HWR	HOT WATER RETURN
HB	HOSE BIBB
HD	HUB DRAIN
HEX	HEAT EXCHANGER
HP	HORSEPOWER
HS	HAND SINK
HST	HOT WATER STORAGE TANK (DOMESTIC)
HWB	HOT WATER BOILER
HWCP	HOT WATER CIRCULATING PUMP
HWP	HOT WATER PUMP
HYD	HYDRANT
ICW	INDUSTRIAL COLD WATER
INV	INVERT
IPC	INTERNATIONAL PLUMBING CODE
IRW	IRRIGATION WATER
IW	INDIRECT WASTE
IWH	INSTANTANEOUS WATER HEATER
IWR	INDUSTRIAL WATER RETURN
IWS	INDUSTRIAL WATER SUPPLY
KW	KILOWATT
KWHR	KILOWATT-HOUR
L/S	LITER PER SECOND
LA	LABORATORY AIR
LAV	LAVATORY
LBS/HR	POUNDS PER HOUR
LCW	LABORATORY COLD WATER
LHW	LABORATORY HOT WATER
LNG	LIQUID NATURAL GAS
LOX	LIQUID OXYGEN
LV	LABORATORY VACUUM
LW	LOW WATER
M	METER
MA	MEDICAL AIR
MAV	MANUAL AIR VENT
MBH	1000 BTUH
MED	MEDICAL
MH	MANHOLE
MS	MOP SERVICE
MV	MEDICAL VACUUM
MGO	MEDICAL GAS OUTLET
N2	NITROGEN
N2O	NITROUS OXIDE
NC	NORMALLY CLOSED
NG	NATURAL GAS
NIC	NOT IN CONTRACT
NO	NORMALLY OPEN
NOM.	NOMINAL
NPW	NON-POTABLE WATER
NTS	NOT TO SCALE
O2	OXYGEN
OC	ON CENTER
OD	OUTSIDE DIAMETER
OFD	OVERFLOW DRAIN (ROOF)
OR	OPERATING ROOM
OVFL	OVERFLOW
PA	PASCAL
PD	PRESSURE DROP OR DIFFERENCE
PDI	PLUMBING AND DRAINAGE INSTITUTE
PG	PRESSURE GAGE
PP	PLUMBING PUMP
PPM	PARTS PER MILLION
PRS	PRESSURE REDUCING STATION
PRV	PRESSURE REDUCING VALVE
PSI	POUNDS PER SQUARE INCH
PSIA	POUNDS PER SQUARE INCH ATMOSPHERE
PSIG	POUNDS PER SQUARE INCH GAUGE
PTRV	PRESSURE TEMPERATURE RELIEF VALVE
PW	POTABLE WATER
RD	ROOF DRAIN
RDL	ROOF DRAIN LEADER
RL	ROOF LEADER
RO	REVERSE OSMOSIS WATER
1 RPBP	REDUCED PRESSURE BACKFLOW PREVENTOR
RWL	RAIN WATER LEADER
SAN	SANITARY SEWER
SD	STORM DRAIN
SSD	SECONDARY STORM DRAIN
SMACNA	SHEET METAL AND AIR CONDITIONING CONTRACTORS NATIONAL ASSOCIATION
SCFM	STANDARD CUBIC FOOT/MINUTE
SCW	SOFTENED COLD WATER
SDMH	STORM DRAIN MANHOLE
SK	SINK
SP	SUMP PUMP
SPR	SPRINKLER LINE
SQFT	SQUARE FEET
SS	STAINLESS STEEL
ST	STORAGE TANK
SW	STORM WATER
TCV	TEMPERATURE CONTROL VALVE
TD	TEMPERATURE DIFFERENCE
TD	TRENCH DRAIN
TDH	TOTAL DYNAMIC HEAD
TEMP	TEMPERATURE
TMV	THERMOSTATIC MIXING VALVE
TP	TRAP PRIMER
TSTAT	THERMOSTAT
TWR	TEMPERED WATER RETURN
TWS	TEMPERED WATER SUPPLY
TYP	TYPICAL
UPC	UNIFORM PLUMBING CODE
V	VENT
VAC	VACUUM
VB	VACUUM BREAKER
VCO	VACUUM CLEANER OUTLET
VP	VACUUM PUMP
VS	VENT STACK
VTR	VENT THROUGH ROOF
W	WASTE
WC	WATER CLOSET
WCO	WALL CLEANOUT
WG	WATER GAGE
WH	WALL HYDRANT
WH	WATER HEATER
WHA	WATER HAMMER ARRESTER
WL	WATER LINE
WM	WATER METER
WPD	WATER PRESSURE DROP
WS	WASTE STACK
YCO	YARD CLEANOUT
YH	YARD HYDRANT
ZVB	ZONE VALVE BOX (MEDICAL GAS SYSTEMS)

ALL WORK IN O.R. DEPARTMENT, MRI DEPARTMENT, OR EXISTING PORTIONS OF HOSPITAL TO BE COMPLETED ON NIGHTS AND WEEKENDS. CONTRACTOR SHALL COORDINATE WITH FACILITY MANAGER.

GENERAL PLUMBING SYMBOLS

- DIRECTION OF PIPE PITCH (DOWN)
- DIRECTION OF FLOW
- ANCHOR
- REDUCER OR INCREASER
- ECCENTRIC REDUCER
- TOP CONNECTION, 45° OR 90°
- BOTTOM CONNECTION, 45° OR 90°
- SIDE CONNECTION
- CAPPED OUTLET
- RISE OR DROP IN PIPE
- UNION
- PIPE UP
- PIPE DOWN
- POINT OF CONNECTION BETWEEN NEW AND EXISTING WORK
- LIMIT OF DEMOLITION
- STRAINER
- THERMOMETER
- PRESSURE GAGE
- FE — FLOW ELEMENT
- WATER HAMMER ARRESTOR

PLUMBING VALVE SYMBOLS

- SHUT-OFF VALVE
- GLOBE VALVE
- GATE VALVE WITH 3/4" HOSE ADAPTER
- CHECK VALVE
- ANGLE GLOBE VALVE
- BUTTERFLY VALVE
- BALL VALVE
- MODULATING CONTROL VALVE
- TWO POSITION CONTROL VALVE
- THREE-WAY MODULATING CONTROL VALVE
- THREE-WAY TWO POSITION CONTROL VALVE
- PRESSURE REGULATING VALVE
- AUTOMATIC FLOW CONTROL VALVE
- PRESSURE RELIEF VALVE
- MANUAL AIR VENT
- TEST PLUG (PRESSURE/TEMPERATURE)
- AV — AUTOMATIC AIR VENT

PLAN

FULLY SPRINKLERED
CONSTRUCTION DOCUMENTS

No.	Date	Revisions
1	01/14/2015	Amendment #4

CONSULTANTS:

STRUCTURAL ENGINEER:
KPFF CONSULTING ENGINEERS - ST. LOUIS
1630 DES PERES RD, SUITE 100
ST. LOUIS, MO 63131

MECHANICAL/ELECTRICAL:
KJWW ENGINEERING CONSULTANTS - ST. LOUIS
#15 SUNNEN DRIVE, SUITE 104
ST. LOUIS, MO 63141

PLUMBING/FIRE PROTECTION:
303RD ENGINEERING GROUP, LLC
1935 ARSENAL STREET
ST. LOUIS, MO 63118

ESTIMATING:
KWAME BUILDING GROUP
1204 WASHINGTON AVE. SUITE 200
ST. LOUIS, MO 63103

LIFE SAFETY:
CODE CONSULTANTS, INC.
2043 WOODLAND PARKWAY, SUITE 300
ST. LOUIS, MO 63146

ACOUSTICAL ENGINEERS:
ACOUSTICONTROL LLC
1709 WASHINGTON AVENUE, LOFT 300
ST. LOUIS, MO 63103

COMMISSIONING:
ZODIAC INTERNATIONAL
16100 CHESTERFIELD PARKWAY, SUITE 365
CHESTERFIELD, MO 63017

ENVIROMENTAL:
EVIRONMENTAL CONSULTANTS, LLC
#6 MEADOW HEIGHTS PROFESSIONAL PARK DR.
COLLINSVILLE, IL
62234

ARCHITECT/ENGINEERS:

CHRISTNER
ARCHITECTS | DESIGNERS | PLANNERS | LANDSCAPE ARCHITECTS
168 N MERAMEC, SUITE 400 | ST. LOUIS, MISSOURI 63105
TEL 314 725 2927 | FAX 314 725 2928 | CHRISTNERINC.COM

THE SEAL (S) AND SIGNATURE(S) APPLY ONLY TO THE DOCUMENT TO WHICH THEY ARE AFFIXED, AND WE EXPRESSLY DISCLAIM ANY RESPONSIBILITY FOR ALL OTHER PLANS, SPECIFICATIONS, ESTIMATES, REPORTS, OR OTHER DOCUMENTS OR INSTRUMENTS RELATING TO OR INTENDED TO BE USED FOR ANY PART OF PARTS OF THE PROJECT.
© COPYRIGHT 2012 CHRISTNER INC.

Drawing Title: LEGEND & NOTES
PLUMBING & MEDICAL GAS
BASE BID, DEDUCT ALTERNATES 1, 2, 3, 4, & 5

DIRECTOR OF SPECIALTY CARE | INFECTION CONTROL PRACTITIONER | CHIEF ENGINEER | ASSISTANT DIRECTOR | ASSOCIATE DIRECTOR OF PATIENT SERVICES | CHIEF OF STAFF | ASSOCIATE DIRECTOR | MEDICAL CENTER DIRECTOR

Project Title: INTENSIVE CARE UNIT
Project Number: 589-330
Building Number: 1
Location: HARRY S. TRUMAN VAMC
Drawing Number: P001.0
Date: 08/22/14 | Checked: CKF | Drawn: JGM | Approved:
Dwg. 114 of 296

Office of Construction and Facilities Management
Department of Veterans Affairs

VA FORM 08-6231 PRINTED ON: January 14, 2015 ORIGINAL SIZE OF SHEET IS 30" X 42"

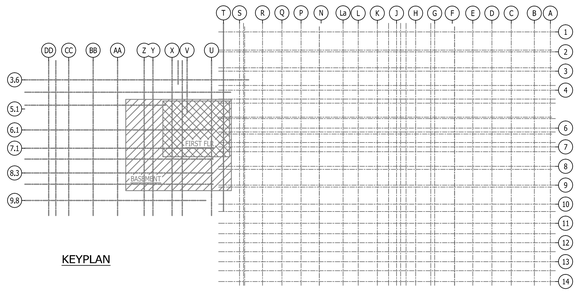

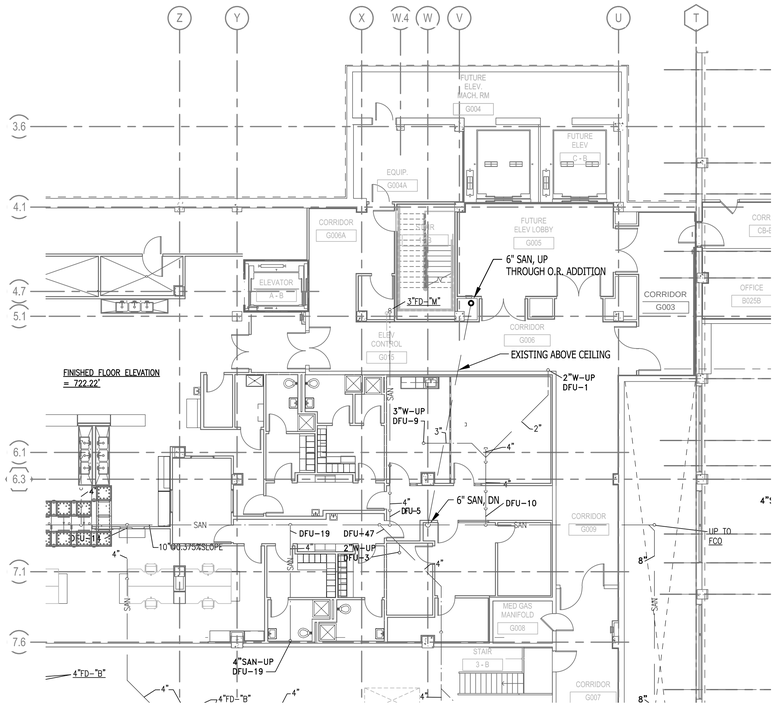

NORTH

BASEMENT FLOOR PLAN

SCALE: 3/32" = 1'-0"

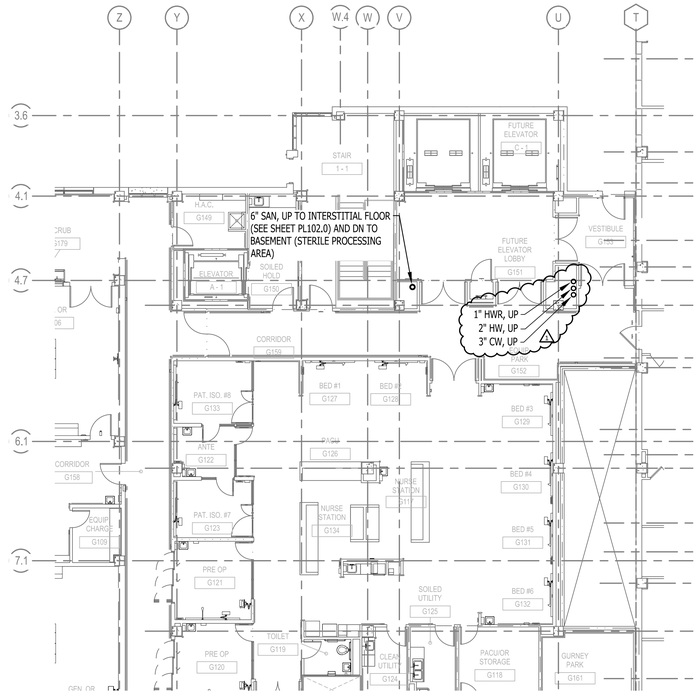

NORTH

FIRST FLOOR PLAN

SCALE: 3/32" = 1'-0"

PLAN

FULLY SPRINKLERED CONSTRUCTION DOCUMENTS

No.	Date	Revisions
1	01/14/2015	Amendment #4

CONSULTANTS:

STRUCTURAL ENGINEER:
KPFF CONSULTING ENGINEERS - ST. LOUIS
1630 DES PERES RD, SUITE 100
ST. LOUIS, MO 63131

MECHANICAL/ELECTRICAL:
KJWW ENGINEERING CONSULTANTS - ST. LOUIS
#15 SUNNEN DRIVE, SUITE 104
ST. LOUIS, MO 63141

PLUMBING/FIRE PROTECTION:
303RD ENGINEERING GROUP, LLC
1935 ARSENAL STREET
ST. LOUIS, MO 63118

ESTIMATING:
KWAME BUILDING GROUP
1204 WASHINGTON AVE. SUITE 200
ST. LOUIS, MO 63103

LIFE SAFETY:
CODE CONSULTANTS, INC.
2043 WOODLAND PARKWAY, SUITE 300
ST. LOUIS, MO 63146

ACOUSTICAL ENGINEERS:
ACOUSTICONTROL LLC
1709 WASHINGTON AVENUE, LOFT 300
ST. LOUIS, MO 63103

COMMISSIONING:
ZODIAC INTERNATIONAL
16100 CHESTERFIELD PARKWAY, SUITE 365
CHESTERFIELD, MO 63017

ENVIROMENTAL:
EVIRONMENTAL CONSULTANTS, LLC
#6 MEADOW HEIGHTS PROFESSIONAL PARK DR.
COLLINSVILLE, IL
62234

ARCHITECT/ENGINEERS:

CHRISTNER

ARCHITECTS | DESIGNERS | PLANNERS | LANDSCAPE ARCHITECTS

168 N MERAMEC, SUITE 400 | ST. LOUIS, MISSOURI 63105
TEL 314 725 2927 | FAX 314 725 2928 | CHRISTNERINC.COM

THE SEAL (S) AND SIGNATURE(S) APPLY ONLY TO THE DOCUMENT TO WHICH THEY ARE AFFIXED, AND WE EXPRESSLY DISCLAIM ANY RESPONSIBILITY FOR ALL OTHER PLANS, SPECIFICATIONS, ESTIMATES, REPORTS, OR OTHER DOCUMENTS OR INSTRUMENTS RELATING TO OR INTENDED TO BE USED FOR ANY PART OF PARTS OF THE PROJECT.
© COPYRIGHT 2012 CHRISTNER INC.

DIRECTOR OF SPECIALTY CARE	INFECTION CONTROL PRACTITIONER	CHIEF ENGINEER	ASSISTANT DIRECTOR	ASSOCIATE DIRECTOR OF PATIENT SERVICES	CHIEF OF STAFF	ASSOCIATE DIRECTOR	MEDICAL CENTER DIRECTOR

Drawing Title
EXISTING BASEMENT & FIRST FLOOR PLANS
PLUMBING
BASE BID, DEDUCT ALTERNATES 1 & 2

Project Title
INTENSIVE CARE UNIT

Project Number
589-330

Building Number
1

Location
HARRY S. TRUMAN VAMC

Date	Checked	Drawn	Approved
08/22/14	CKF	JGM	

Drawing Number
PL101.0

Dwg. 115 of 296

Office of Construction and Facilities Management

Department of Veterans Affairs

VA FORM 08-6231 PRINTED ON: January 14, 2015 ORIGINAL SIZE OF SHEET IS 30" X 42"

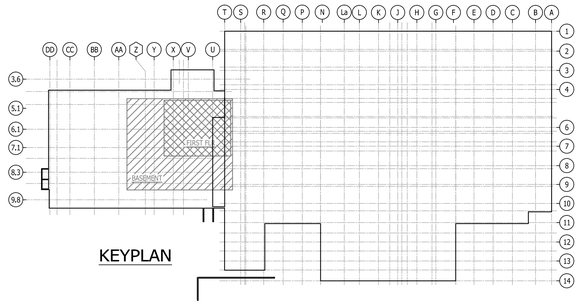

KEYPLAN

KEYED NOTES

1. NOT USED.
2. EXISTING SANITARY INSTALLED IN SPD PROJECT FOR ICU.
3. CONNECT NEW 3" CW PIPING TO NEAREST EXISTING COLD WATER SERVICE.
4. CONNECT NEW 2" HW PIPING TO OUTLET OF EXISTING WATER HEATER.
5. CONNECT NEW 1" HWR PIPING TO SUCTION SIDE OF EXISTING HOT WATER CIRCULATION PUMP. PROVIDE CIRCUIT SETTER AT CONNECTION AND SET AT 5 GPM.

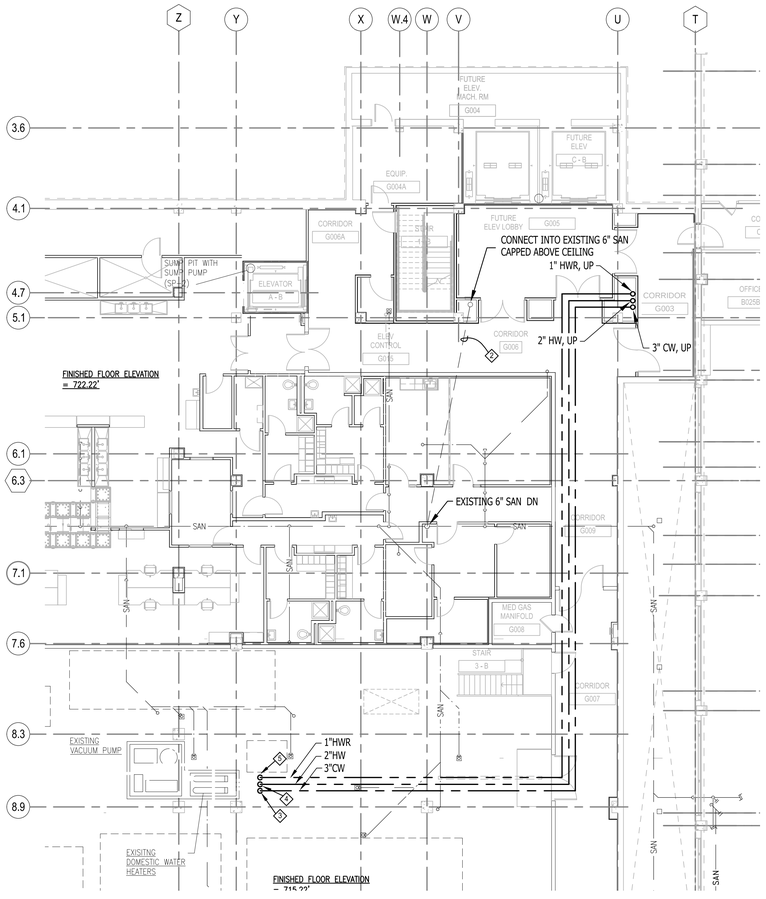

NORTH

EXISTING BASEMENT FLOOR PLAN

SCALE: 3/32" = 1'-0"

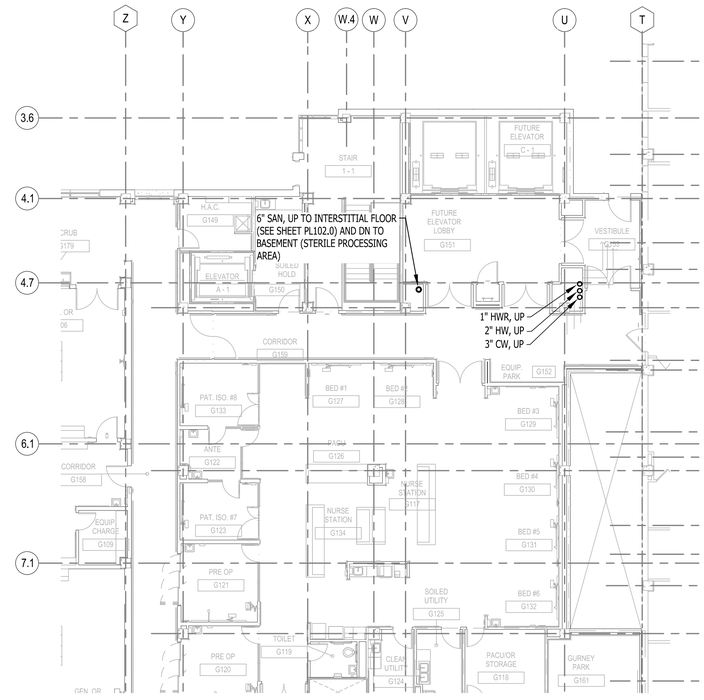

NORTH

EXISTING FIRST FLOOR PLAN

SCALE: 3/32" = 1'-0"

PLAN

FULLY SPRINKLERED CONSTRUCTION DOCUMENTS

No.	Date	Revisions

CONSULTANTS:

STRUCTURAL ENGINEER:
KPFF CONSULTING ENGINEERS - ST. LOUIS
1630 DES PERES RD, SUITE 100
ST. LOUIS, MO 63131

MECHANICAL/ELECTRICAL:
KJWW ENGINEERING CONSULTANTS - ST. LOUIS
#15 SUNNEN DRIVE, SUITE 104
ST. LOUIS, MO 63141

PLUMBING/FIRE PROTECTION:
303RD ENGINEERING GROUP, LLC
1935 ARSENAL STREET
ST. LOUIS, MO 63118

ESTIMATING:
KWAME BUILDING GROUP
1204 WASHINGTON AVE. SUITE 200
ST. LOUIS, MO 63103

LIFE SAFETY:
CODE CONSULTANTS, INC.
2043 WOODLAND PARKWAY, SUITE 300
ST. LOUIS, MO 63146

ACOUSTICAL ENGINEERS:
ACOUSTICONTROL LLC
1709 WASHINGTON AVENUE, LOFT 300
ST. LOUIS, MO 63103

COMMISSIONING:
ZODIAC INTERNATIONAL
16100 CHESTERFIELD PARKWAY, SUITE 365
CHESTERFIELD, MO 63017

ENVIROMENTAL:
EVIROMENTAL CONSULTANTS, LLC
#6 MEADOW HEIGHTS PROFESSIONAL PARK DR.
COLLINSVILLE, IL
62234

ARCHITECT/ENGINEERS:

CHRISTNER

ARCHITECTS | DESIGNERS | PLANNERS | LANDSCAPE ARCHITECTS

168 N MERAMEC, SUITE 400 | ST. LOUIS, MISSOURI 63105
TEL 314 725 2927 | FAX 314 725 2928 | CHRISTNERINC.COM

THE SEAL (S) AND SIGNATURE(S) APPLY ONLY TO THE DOCUMENT TO WHICH THEY ARE AFFIXED, AND WE EXPRESSLY DISCLAIM ANY RESPONSIBILITY FOR ALL OTHER PLANS, SPECIFICATIONS, ESTIMATES, REPORTS, OR OTHER DOCUMENTS OR INSTRUMENTS RELATING TO OR INTENDED TO BE USED FOR ANY PART OF PARTS OF THE PROJECT.
© COPYRIGHT 2012 CHRISTNER INC.

DIRECTOR OF SPECIALTY CARE	INFECTION CONTROL PRACTITIONER	CHIEF ENGINEER	ASSISTANT DIRECTOR	ASSOCIATE DIRECTOR OF PATIENT SERVICES	CHIEF OF STAFF	ASSOCIATE DIRECTOR	MEDICAL CENTER DIRECTOR

Drawing Title: EXISTING BASEMENT & FIRST FLOOR PLANS PLUMBING DEDUCT ALTERNATES 3, 4, & 5

Project Title: INTENSIVE CARE UNIT

Project Number: 589-330

Building Number: 1

Location: HARRY S. TRUMAN VAMC

Date	Checked	Drawn	Approved
08/22/14	CKF	JGM	

Drawing Number: PL101.3

Dwg. 116 of 296

Office of Construction and Facilities Management

Department of Veterans Affairs

VA FORM 08-6231 PRINTED ON: August 22, 2014 ORIGINAL SIZE OF SHEET IS 30" X 42"

KEYPLAN

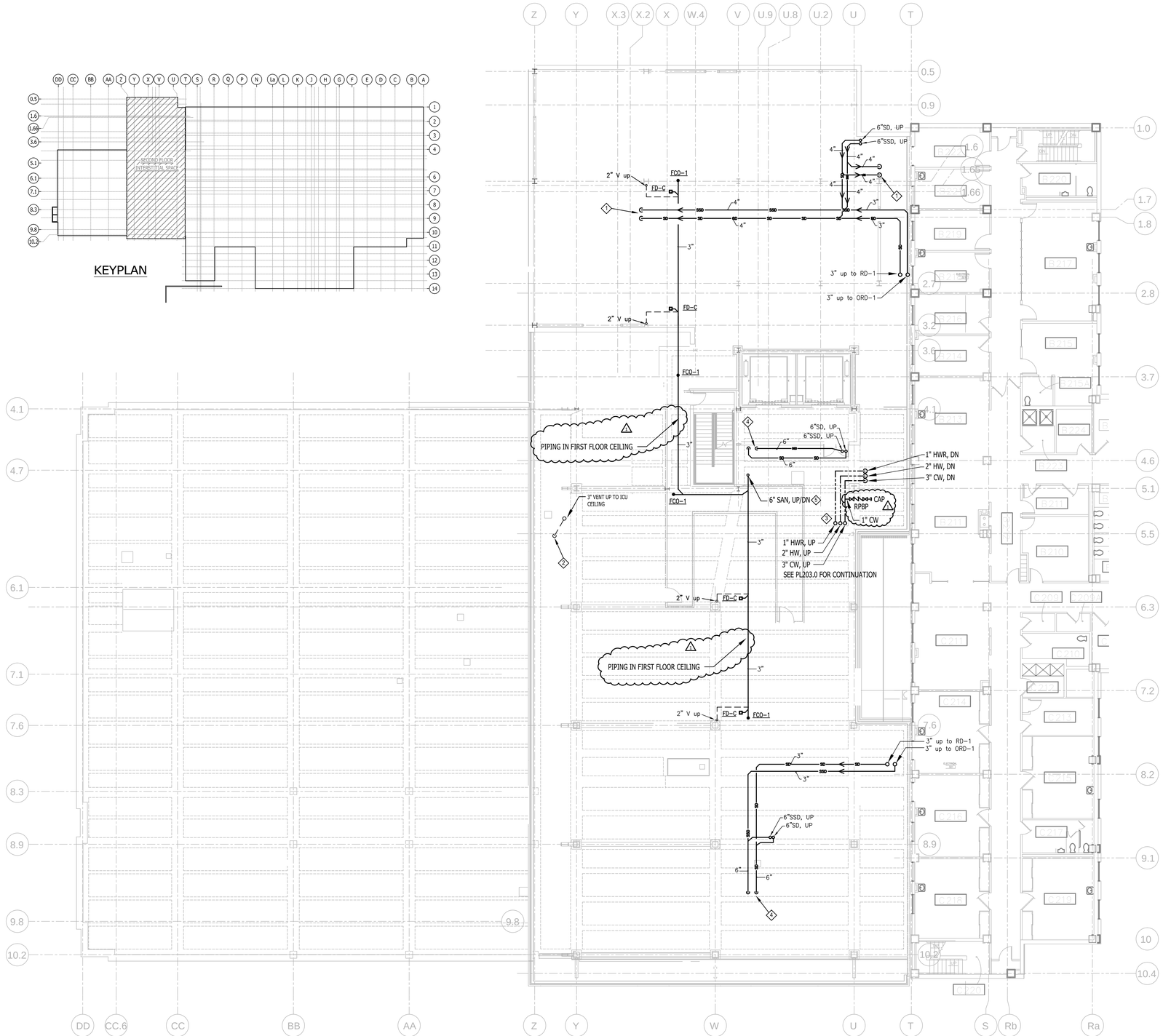

KEYED NOTES

1. REMOVE EXISTING ROOF AND OVERFLOW ROOF DRAIN BODIES AND CONNECT NEW 4" STORM DRAIN PIPING TO EXISTING 4" STORM DRAIN PIPING.
2. CONNECT EXISTING PLUMBING VENT PIPE TO 3" VENT STACK.
3. CONNECT TO EXISTING WATER RISERS IN FIRST FLOOR CEILING SPACE. SEE PL101.0.
4. REMOVE EXISTING ROOF AND OVERFLOW DRAIN BODIES AND CONNECT NEW 6" STORM DRAIN PIPING TO EXISTING 6" STORM DRAIN PIPING.
5. REMOVE EXISTING 6" SANITARY CAP FOR CONNECTION OF NEW 6" SANITARY DRAIN PIPING.

NORTH

INTERSTITIAL FLOOR PLAN - PLUMBING

SCALE: 3/32" = 1'-0"

PLAN

FULLY SPRINKLERED CONSTRUCTION DOCUMENTS

No.	Date	Revisions
1	01/14/2015	Amendment #4

CONSULTANTS:

STRUCTURAL ENGINEER:
KPFF CONSULTING ENGINEERS - ST. LOUIS
1630 DES PERES RD, SUITE 100
ST. LOUIS, MO 63131

MECHANICAL/ELECTRICAL:
KJWW ENGINEERING CONSULTANTS - ST. LOUIS
#15 SUNNEN DRIVE, SUITE 104
ST. LOUIS, MO 63141

PLUMBING/FIRE PROTECTION:
303RD ENGINEERING GROUP, LLC
1935 ARSENAL STREET
ST. LOUIS, MO 63118

ESTIMATING:
KWAME BUILDING GROUP
1204 WASHINGTON AVE. SUITE 200
ST. LOUIS, MO 63103

LIFE SAFETY:
CODE CONSULTANTS, INC.
2043 WOODLAND PARKWAY, SUITE 300
ST. LOUIS, MO 63146

ACOUSTICAL ENGINEERS:
ACOUSTICONTROL LLC
1709 WASHINGTON AVENUE, LOFT 300
ST. LOUIS, MO 63103

COMMISSIONING:
ZODIAC INTERNATIONAL
16100 CHESTERFIELD PARKWAY, SUITE 365
CHESTERFIELD, MO 63017

ENVIROMENTAL:
EVIROMENTAL CONSULTANTS, LLC
#6 MEADOW HEIGHTS PROFESSIONAL PARK DR.
COLLINSVILLE, IL
62234

ARCHITECT/ENGINEERS:

CHRISTNER

ARCHITECTS | DESIGNERS | PLANNERS | LANDSCAPE ARCHITECTS

168 N MERAMEC, SUITE 400 | ST. LOUIS, MISSOURI 63105
TEL 314 725 2927 | FAX 314 725 2928 | CHRISTNERINC.COM

THE SEAL (S) AND SIGNATURE(S) APPLY ONLY TO THE DOCUMENT TO WHICH THEY ARE AFFIXED, AND WE EXPRESSLY DISCLAIM ANY RESPONSIBILITY FOR ALL OTHER PLANS, SPECIFICATIONS, ESTIMATES, REPORTS, OR OTHER DOCUMENTS OR INSTRUMENTS RELATING TO OR INTENDED TO BE USED FOR ANY PART OF PARTS OF THE PROJECT.
© COPYRIGHT 2012 CHRISTNER INC.

DIRECTOR OF SPECIALTY CARE	INFECTION CONTROL PRACTITIONER	CHIEF ENGINEER	ASSISTANT DIRECTOR	ASSOCIATE DIRECTOR OF PATIENT SERVICES	CHIEF OF STAFF	ASSOCIATE DIRECTOR	MEDICAL CENTER DIRECTOR

Drawing Title: INTERSTITIAL SPACE SANITARY & STORM BASE BID, DEDUCT ALTERNATES 1, 2, & 3

Project Title: INTENSIVE CARE UNIT

Project Number: 589-330

Building Number: 1

Location: HARRY S. TRUMAN VAMC

Date	Checked	Drawn	Approved
08/22/14	CKF	JGM	

Drawing Number: PL102.0

Dwg. 117 of 296

Office of Construction and Facilities Management

Department of Veterans Affairs

VA FORM 08-6231 PRINTED ON: January 14, 2015 ORIGINAL SIZE OF SHEET IS 30" X 42"

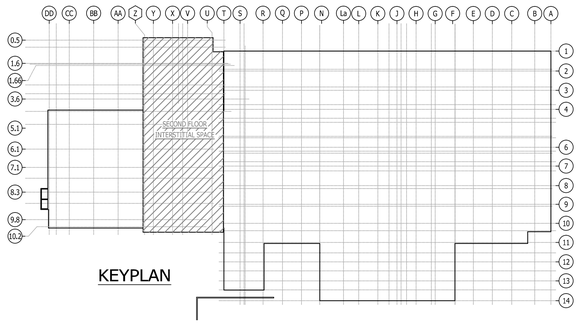

KEYPLAN

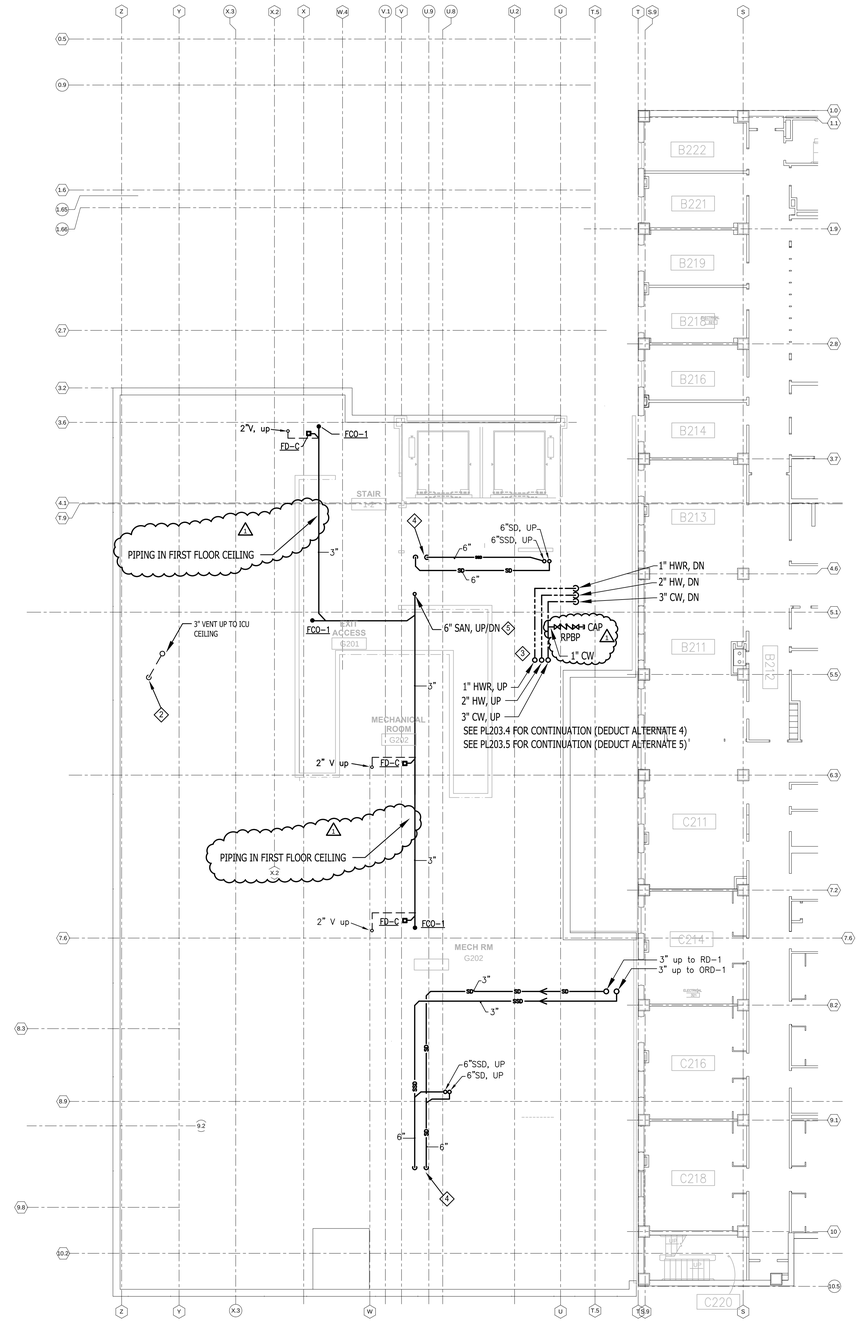

KEYED NOTES

1. NOT USED.
2. CONNECT EXISTING PLUMBING VENT PIPE TO 3" VENT STACK.
3. CONNECT TO EXISTING WATER RISERS IN FIRST FLOOR CEILING SPACE. SEE PL101.3.
4. REMOVE EXISTING ROOF AND OVERFLOW DRAIN BODIES AND CONNECT NEW 6" STORM DRAIN PIPING TO EXISTING 6" STORM DRAIN PIPING.
5. REMOVE EXISTING 6" SANITARY CAP FOR CONNECTION OF NEW 6" SANITARY DRAIN PIPING.

NORTH

INTERSTITIAL FLOOR PLAN - PLUMBING

SCALE: 3/32" = 1'-0"

PLAN

FULLY SPRINKLERED CONSTRUCTION DOCUMENTS

No.	Date	Revisions
1	01/14/2015	Amendment #4

CONSULTANTS:

STRUCTURAL ENGINEER:
KPFF CONSULTING ENGINEERS - ST. LOUIS
1630 DES PERES RD, SUITE 100
ST. LOUIS, MO 63131

MECHANICAL/ELECTRICAL:
KJWW ENGINEERING CONSULTANTS - ST. LOUIS
#15 SUNNEN DRIVE, SUITE 104
ST. LOUIS, MO 63141

PLUMBING/FIRE PROTECTION:
303RD ENGINEERING GROUP, LLC
1935 ARSENAL STREET
ST. LOUIS, MO 63118

ESTIMATING:
KWAME BUILDING GROUP
1204 WASHINGTON AVE, SUITE 200
ST. LOUIS, MO 63103

LIFE SAFETY:
CODE CONSULTANTS, INC.
2043 WOODLAND PARKWAY, SUITE 300
ST. LOUIS, MO 63146

ACOUSTICAL ENGINEERS:
ACOUSTICONTROL LLC
1709 WASHINGTON AVENUE, LOFT 300
ST. LOUIS, MO 63103

COMMISSIONING:
ZODIAC INTERNATIONAL
16100 CHESTERFIELD PARKWAY, SUITE 365
CHESTERFIELD, MO 63017

ENVIROMENTAL:
EVIRONMENTAL CONSULTANTS, LLC
#6 MEADOW HEIGHTS PROFESSIONAL PARK DR.
COLLINSVILLE, IL
62234

ARCHITECT/ENGINEERS:

CHRISTNER

ARCHITECTS | DESIGNERS | PLANNERS | LANDSCAPE ARCHITECTS

168 N MERAMEC, SUITE 400 | ST. LOUIS, MISSOURI 63105
TEL 314 725 2927 | FAX 314 725 2928 | CHRISTNERINC.COM

THE SEAL (S) AND SIGNATURE(S) APPLY ONLY TO THE DOCUMENT TO WHICH THEY ARE AFFIXED, AND WE EXPRESSLY DISCLAIM ANY RESPONSIBILITY FOR ALL OTHER PLANS, SPECIFICATIONS, ESTIMATES, REPORTS, OR OTHER DOCUMENTS OR INSTRUMENTS RELATING TO OR INTENDED TO BE USED FOR ANY PART OF PARTS OF THE PROJECT.
© COPYRIGHT 2012 CHRISTNER INC.

Drawing Title: INTERSTITIAL SPACE SANITARY & STORM DEDUCT ALTERNATES 4 & 5

DIRECTOR OF SPECIALTY CARE | INFECTION CONTROL PRACTITIONER | CHIEF ENGINEER | ASSISTANT DIRECTOR | ASSOCIATE DIRECTOR OF PATIENT SERVICES | CHIEF OF STAFF | ASSOCIATE DIRECTOR | MEDICAL CENTER DIRECTOR

Project Title: INTENSIVE CARE UNIT

Location: HARRY S. TRUMAN VAMC

Date: 08/22/14 | Checked: CKF | Drawn: JGM | Approved:

Project Number: 589-330

Building Number: 1

Drawing Number: PL102.4

Dwg. 118 of 296

Office of Construction and Facilities Management

Department of Veterans Affairs

VA FORM 08-6231 PRINTED ON: January 14, 2015 ORIGINAL SIZE OF SHEET IS 30" X 42"

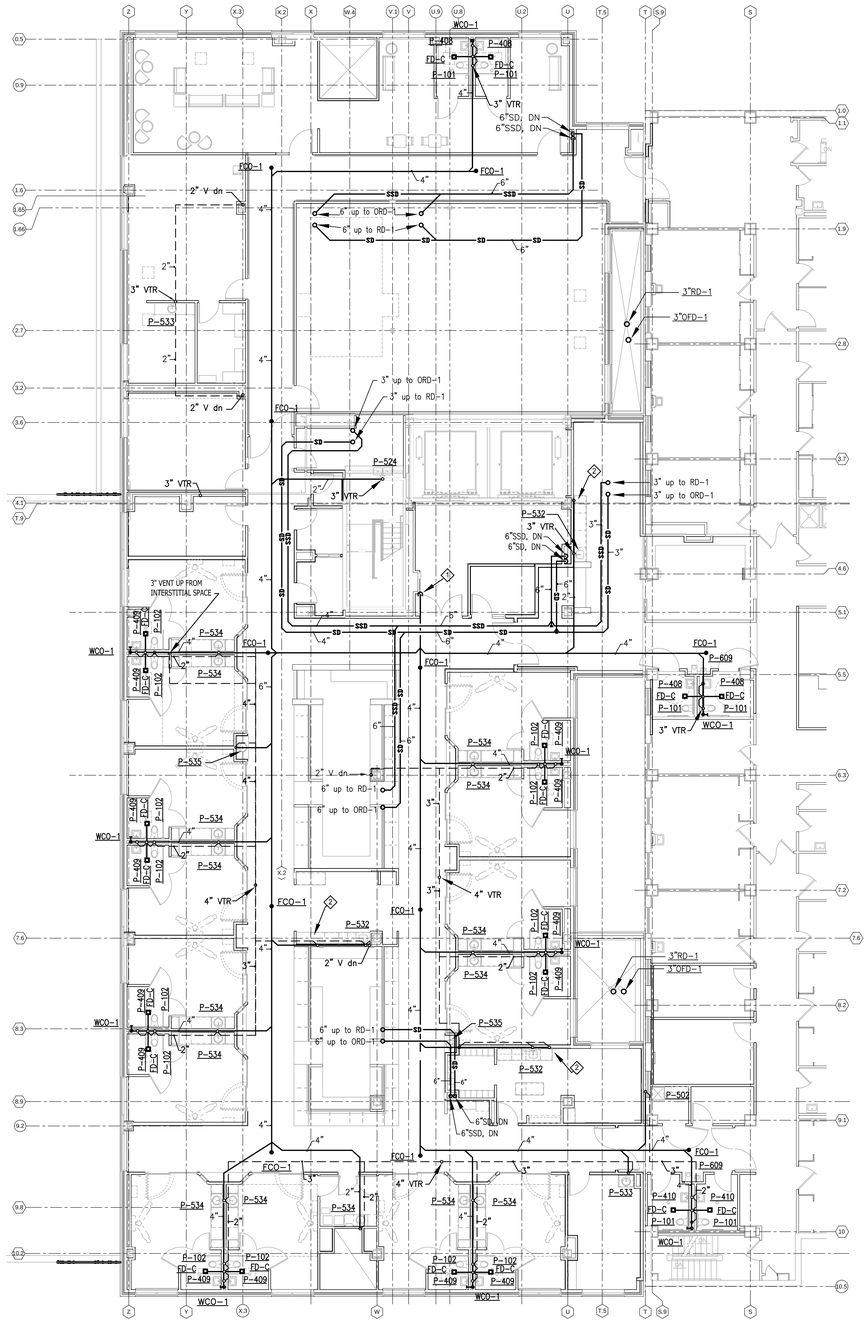

LEGEND

P-101 TOILET
P-102 TOILET AUTOMATIC FLUSH
P-408 WALL HUNG LAVATORY
P-410 INTEGRAL SINK
P-421 COUNTER MNT LAVATORY

SANITARY PIPING
VENT PIPING
COLD WATER PIPING
HOT WATER PIPING
HOT WATER CIRCULATION PIPING
STORM PIPING

KEYED NOTES

1. 6"" SANITARY LINE DOWN TO SPD AREA CONNECT TO EXISTING 6" SANITARY RISER.

NORTH

ICU FLOOR PLAN - SANITARY AND STORM

SCALE: 3/32" = 1'-0"

PLAN

FULLY SPRINKLERED
CONSTRUCTION DOCUMENTS

No.	Date	Revisions

CONSULTANTS:

STRUCTURAL ENGINEER:
KPFF CONSULTING ENGINEERS - ST. LOUIS
1630 DES PERES RD, SUITE 100
ST. LOUIS, MO 63131

MECHANICAL/ELECTRICAL:
KJWW ENGINEERING CONSULTANTS - ST. LOUIS
#15 SUNNEN DRIVE, SUITE 104
ST. LOUIS, MO 63141

PLUMBING/FIRE PROTECTION:
303RD ENGINEERING GROUP, LLC
1935 ARSENAL STREET
ST. LOUIS, MO 63118

ESTIMATING:
KWAME BUILDING GROUP
1204 WASHINGTON AVE. SUITE 200
ST. LOUIS, MO 63103

LIFE SAFETY:
CODE CONSULTANTS, INC.
2043 WOODLAND PARKWAY, SUITE 300
ST. LOUIS, MO 63146

ACOUSTICAL ENGINEERS:
ACOUSTICONTROL LLC
1709 WASHINGTON AVENUE, LOFT 300
ST. LOUIS, MO 63103

COMMISSIONING:
ZODIAC INTERNATIONAL
16100 CHESTERFIELD PARKWAY, SUITE 365
CHESTERFIELD, MO 63017

ENVIROMENTAL:
EVIRONMENTAL CONSULTANTS, LLC
#6 MEADOW HEIGHTS PROFESSIONAL PARK DR.
COLLINSVILLE, IL
62234

ARCHITECT/ENGINEERS:

CHRISTNER

ARCHITECTS | DESIGNERS | PLANNERS | LANDSCAPE ARCHITECTS

168 N MERAMEC, SUITE 400 | ST. LOUIS, MISSOURI 63105
TEL 314 725 2927 | FAX 314 725 2928 | CHRISTNERINC.COM

THE SEAL (S) AND SIGNATURE(S) APPLY ONLY TO THE DOCUMENT TO WHICH THEY ARE AFFIXED, AND WE EXPRESSLY DISCLAIM ANY RESPONSIBILITY FOR ALL OTHER PLANS, SPECIFICATIONS, ESTIMATES, REPORTS, OR OTHER DOCUMENTS OR INSTRUMENTS RELATING TO OR INTENDED TO BE USED FOR ANY PART OF PARTS OF THE PROJECT.
© COPYRIGHT 2012 CHRISTNER INC.

Drawing Title
ICU FLOOR PLAN
SANITARY AND STORM
BASE BID & DEDUCT ALTERNATE 1

DIRECTOR OF SPECIALTY CARE	INFECTION CONTROL PRACTITIONER	CHIEF ENGINEER	ASSISTANT DIRECTOR	ASSOCIATE DIRECTOR OF PATIENT SERVICES	CHIEF OF STAFF	ASSOCIATE DIRECTOR	MEDICAL CENTER DIRECTOR

Project Title
INTENSIVE CARE UNIT

Location
HARRY S. TRUMAN VAMC

Date	Checked	Drawn	Approved
08/22/14	CKF	JGM	

Project Number
589-330

Building Number
1

Drawing Number
PL103.0

Dwg. 119 of 296

Office of Construction and Facilities Management

Department of Veterans Affairs

VA FORM 08-6231 PRINTED ON: August 22, 2014 ORIGINAL SIZE OF SHEET IS 30" X 42"

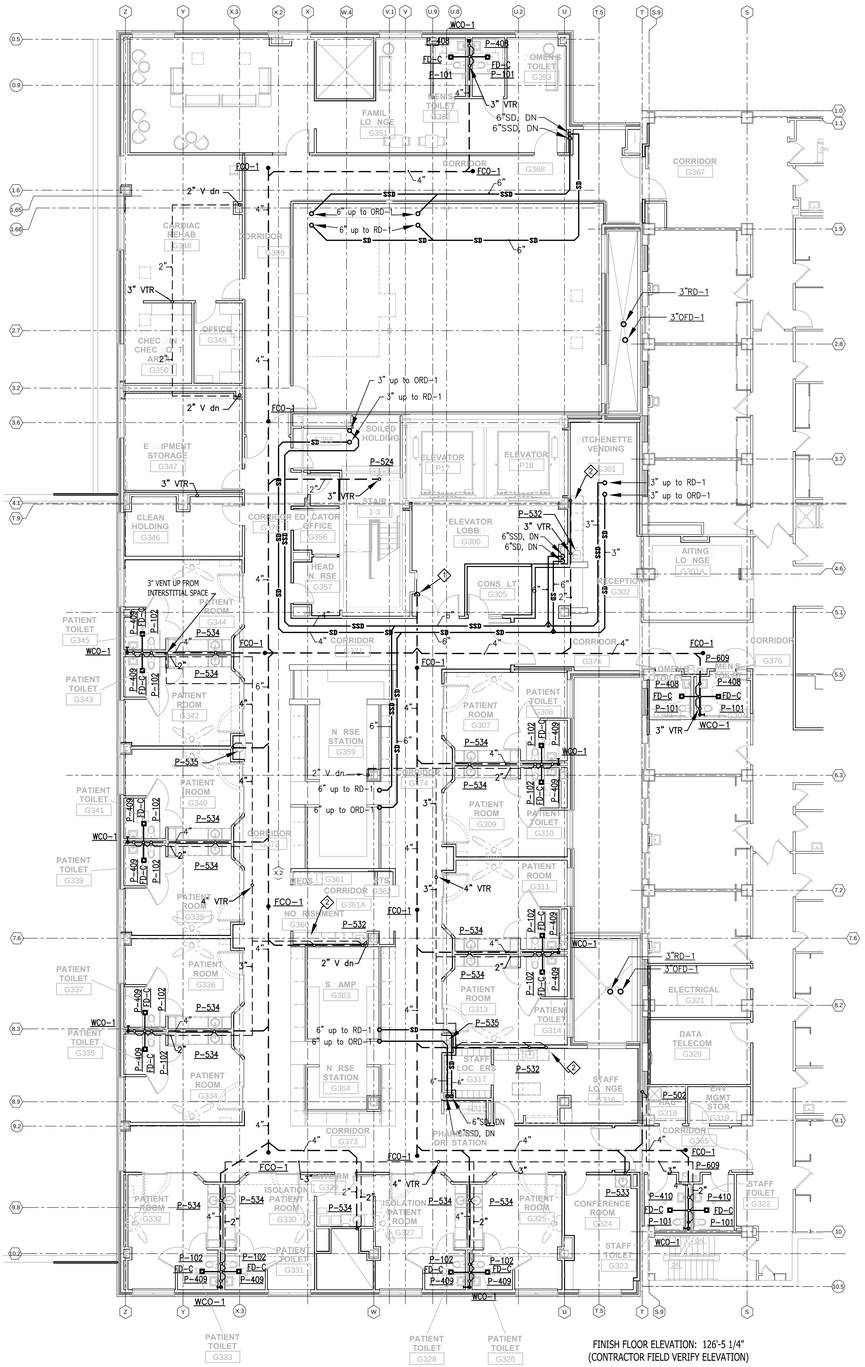

LEGEND

P-101	TOILET, SENSOR FLUSH
P-102	TOILET, ADA, MANUAL
P-116	BEDPAN WASHER
P-408	WALL HUNG LAVATORY
P-409	WALL HUNG LAVATORY, WRIST BLADE HANDLES
P-410	WALL HUNG LAVATORY, FOOT PEDALS
P-502	MOP SINK
P-524	INTEGRAL SS SINK, FOOT PEDALS
P-532	UNDERCOUNTER SS SINK, WRIST BLADE HANDLES
P-533	INTEGRAL SINK, WRIST BLADE HANDLES,
P-534	INTEGRAL SINK, FOOT PEDALS
P-535	INTEGRAL SINK, FOOT PEDALS, EMERGENCY EYE WASH
P-609	ELECTRIC WATER COOLER, DUAL HEIGHT

KEYED NOTES

1. 6" SANITARY LINE DOWN TO INTERSTITIAL SPACE CONNECT TO EXISTING 6" SANITARY RISER.
2. 2" SANITARY AND 1 1/2" VENT FOR ICE / WATER DISPENSER.

NORTH

ICU FLOOR PLAN - SANITARY & STORM

SCALE: 3/32" = 1'-0"

PLAN

FULLY SPRINKLERED
CONSTRUCTION DOCUMENTS

No.	Date	Revisions

CONSULTANTS:

STRUCTURAL ENGINEER:
KPFF CONSULTING ENGINEERS - ST. LOUIS
1630 DES PERES RD, SUITE 100
ST. LOUIS, MO 63131

MECHANICAL/ELECTRICAL:
KJWW ENGINEERING CONSULTANTS - ST. LOUIS
#15 SUNNEN DRIVE, SUITE 104
ST. LOUIS, MO 63141

PLUMBING/FIRE PROTECTION:
303RD ENGINEERING GROUP, LLC
1935 ARSENAL STREET
ST. LOUIS, MO 63118

ESTIMATING:
KWAME BUILDING GROUP
1204 WASHINGTON AVE, SUITE 200
ST. LOUIS, MO 63103

LIFE SAFETY:
CODE CONSULTANTS, INC.
2043 WOODLAND PARKWAY, SUITE 300
ST. LOUIS, MO 63146

ACOUSTICAL ENGINEERS:
ACOUSTICONTROL LLC
1709 WASHINGTON AVENUE, LOFT 300
ST. LOUIS, MO 63103

COMMISSIONING:
ZODIAC INTERNATIONAL
16100 CHESTERFIELD PARKWAY, SUITE 365
CHESTERFIELD, MO 63017

ENVIROMENTAL:
EVIRONMENTAL CONSULTANTS, LLC
#6 MEADOW HEIGHTS PROFESSIONAL PARK DR.
COLLINSVILLE, IL
62234

ARCHITECT/ENGINEERS:

CHRISTNER
ARCHITECTS | DESIGNERS | PLANNERS | LANDSCAPE ARCHITECTS
168 N MERAMEC, SUITE 400 | ST. LOUIS, MISSOURI 63105
TEL 314 725 2927 | FAX 314 725 2928 | CHRISTNERINC.COM

THE SEAL (S) AND SIGNATURE(S) APPLY ONLY TO THE DOCUMENT TO WHICH THEY ARE AFFIXED, AND WE EXPRESSLY DISCLAIM ANY RESPONSIBILITY FOR ALL OTHER PLANS, SPECIFICATIONS, ESTIMATES, REPORTS, OR OTHER DOCUMENTS OR INSTRUMENTS RELATING TO OR INTENDED TO BE USED FOR ANY PART OF PARTS OF THE PROJECT.
© COPYRIGHT 2012 CHRISTNER INC.

DIRECTOR OF SPECIALTY CARE	INFECTION CONTROL PRACTITIONER	CHIEF ENGINEER	ASSISTANT DIRECTOR	ASSOCIATE DIRECTOR OF PATIENT SERVICES	CHIEF OF STAFF	ASSOCIATE DIRECTOR	MEDICAL CENTER DIRECTOR

Drawing Title: ICU FLOOR PLAN SANITARY & STORM DEDUCT ALTERNATE 2

Project Title: INTENSIVE CARE UNIT

Project Number: 589-330

Building Number: 1

Location: HARRY S. TRUMAN VAMC

Date: 08/22/14 | Checked: CKF | Drawn: JGM | Approved:

Drawing Number: PL103.2

Dwg. 120 of 296

Office of Construction and Facilities Management

Department of Veterans Affairs

VA FORM 08-6231 PRINTED ON: August 22, 2014 ORIGINAL SIZE OF SHEET IS 30" X 42"

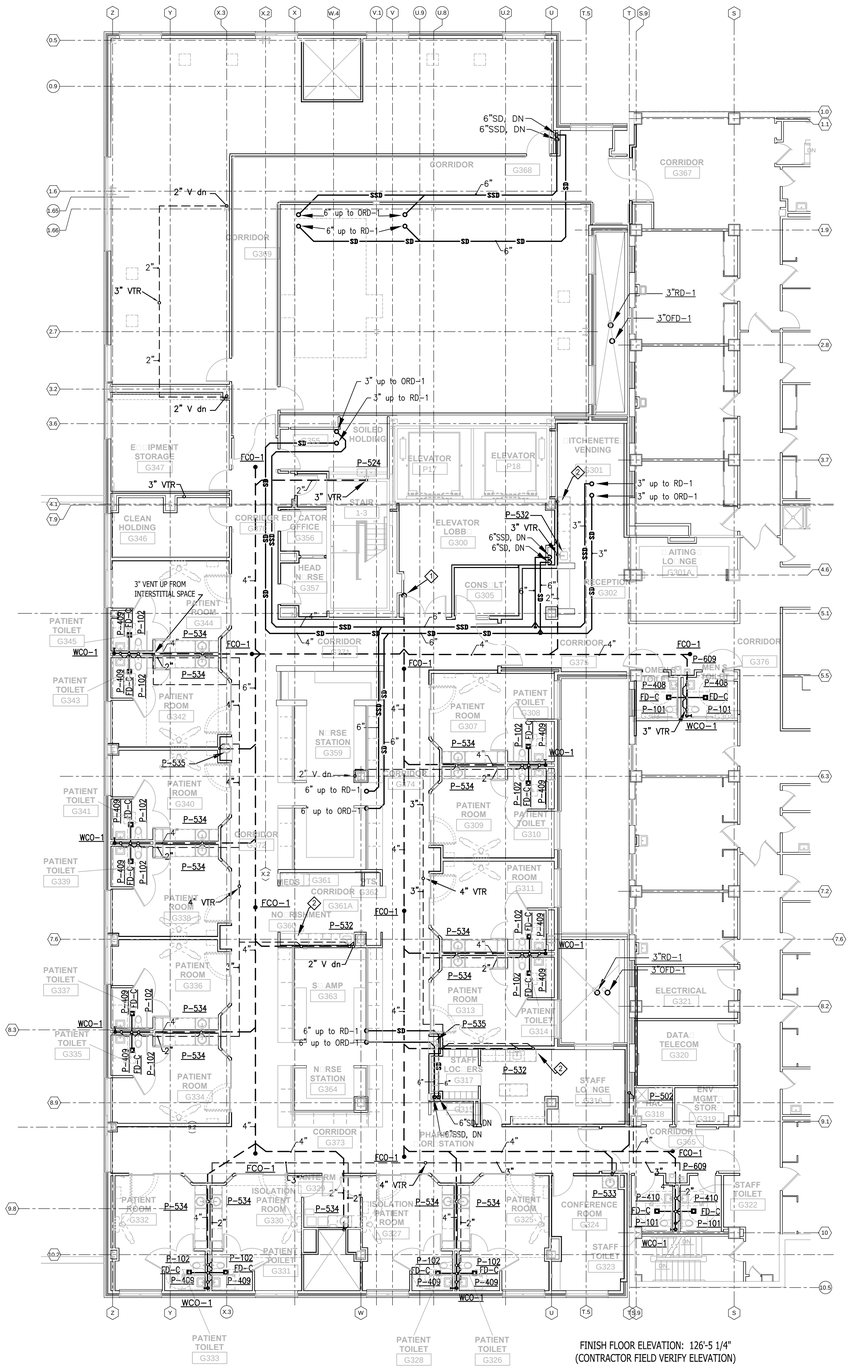

LEGEND

P-101	TOILET, SENSOR FLUSH
P-102	TOILET, ADA, MANUAL
P-116	BEDPAN WASHER
P-408	WALL HUNG LAVATORY
P-409	WALL HUNG LAVATORY, WRIST BLADE HANDLES
P-410	WALL HUNG LAVATORY, FOOT PEDALS
P-502	MOP SINK
P-524	INTEGRAL SS SINK, FOOT PEDALS
P-532	UNDERCOUNTER SS SINK, WRIST BLADE HANDLES
P-533	INTEGRAL SINK, WRIST BLADE HANDLES,
P-534	INTEGRAL SINK, FOOT PEDALS
P-535	INTEGRAL SINK, FOOT PEDALS, EMERGENCY EYE WASH
P-609	ELECTRIC WATER COOLER, DUAL HEIGHT

SANITARY PIPING
VENT PIPING
COLD WATER PIPING
HOT WATER PIPING
HOT WATER CIRCULATION PIPING
STORM PIPING
SECONDARY STORM PIPING

KEYED NOTES

1. 6" SANITARY LINE DOWN TO INTERSTITIAL SPACE CONNECT TO EXISTING 6" SANITARY RISER.
2. 2" SANITARY AND 1 1/2" VENT FOR ICE / WATER DISPENSER.

NORTH

ICU FLOOR PLAN - SANITARY & STORM

SCALE: 3/32" = 1'-0"

PLAN

FULLY SPRINKLERED
CONSTRUCTION DOCUMENTS

No.	Date	Revisions

CONSULTANTS:

STRUCTURAL ENGINEER:
KPFF CONSULTING ENGINEERS - ST. LOUIS
1630 DES PERES RD, SUITE 100
ST. LOUIS, MO 63131

MECHANICAL/ELECTRICAL:
KJWW ENGINEERING CONSULTANTS - ST. LOUIS
#15 SUNNEN DRIVE, SUITE 104
ST. LOUIS, MO 63141

PLUMBING/FIRE PROTECTION:
303RD ENGINEERING GROUP, LLC
1935 ARSENAL STREET
ST. LOUIS, MO 63118

ESTIMATING:
KWAME BUILDING GROUP
1204 WASHINGTON AVE, SUITE 200
ST. LOUIS, MO 63103

LIFE SAFETY:
CODE CONSULTANTS, INC.
2043 WOODLAND PARKWAY, SUITE 300
ST. LOUIS, MO 63146

ACOUSTICAL ENGINEERS:
ACOUSTICONTROL LLC
1709 WASHINGTON AVENUE, LOFT 300
ST. LOUIS, MO 63103

COMMISSIONING:
ZODIAC INTERNATIONAL
16100 CHESTERFIELD PARKWAY, SUITE 365
CHESTERFIELD, MO 63017

ENVIROMENTAL:
EVIRONMENTAL CONSULTANTS, LLC
#6 MEADOW HEIGHTS PROFESSIONAL PARK DR.
COLLINSVILLE, IL
62234

ARCHITECT/ENGINEERS:

CHRISTNER
ARCHITECTS | DESIGNERS | PLANNERS | LANDSCAPE ARCHITECTS
168 N MERAMEC, SUITE 400 | ST. LOUIS, MISSOURI 63105
TEL 314 725 2927 | FAX 314 725 2928 | CHRISTNERINC.COM

THE SEAL (S) AND SIGNATURE(S) APPLY ONLY TO THE DOCUMENT TO WHICH THEY ARE AFFIXED, AND WE EXPRESSLY DISCLAIM ANY RESPONSIBILITY FOR ALL OTHER PLANS, SPECIFICATIONS, ESTIMATES, REPORTS, OR OTHER DOCUMENTS OR INSTRUMENTS RELATING TO OR INTENDED TO BE USED FOR ANY PART OF PARTS OF THE PROJECT.
© COPYRIGHT 2012 CHRISTNER INC.

DIRECTOR OF SPECIALTY CARE	INFECTION CONTROL PRACTITIONER	CHIEF ENGINEER	ASSISTANT DIRECTOR	ASSOCIATE DIRECTOR OF PATIENT SERVICES	CHIEF OF STAFF	ASSOCIATE DIRECTOR	MEDICAL CENTER DIRECTOR

Drawing Title: ICU FLOOR PLAN SANITARY & STORM DEDUCT ALTERNATE 3

Project Title: INTENSIVE CARE UNIT

Location: HARRY S. TRUMAN VAMC

Date	Checked	Drawn	Approved
08/22/14	CKF	JGM	

Project Number: 589-330
Building Number: 1
Drawing Number: PL103.3
Dwg. 121 of 296

Office of Construction and Facilities Management
Department of Veterans Affairs

VA FORM 08-6231 PRINTED ON: August 22, 2014 ORIGINAL SIZE OF SHEET IS 30" X 42"

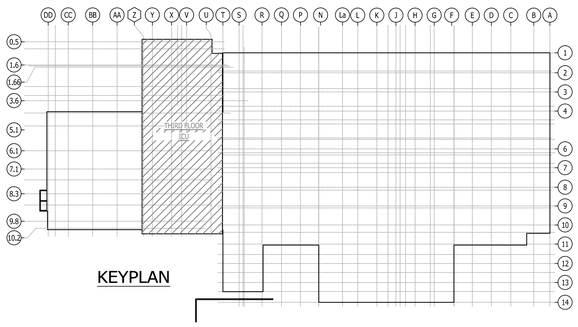

KEYPLAN

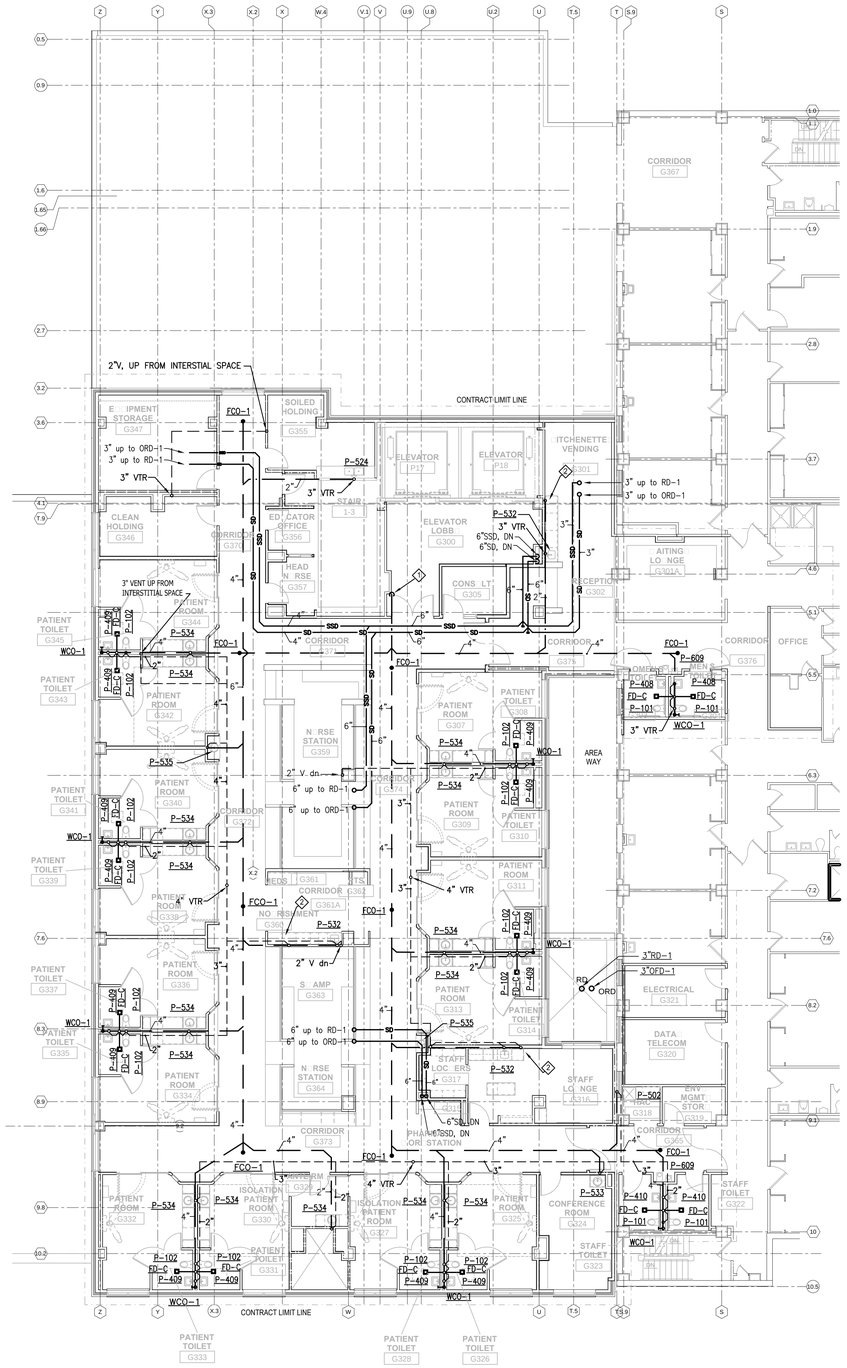

FINISH FLOOR ELEVATION: 126'-5 1/4"
(CONTRACTOR FIELD VERIFY ELEVATION)

LEGEND

P-101	TOILET, SENSOR FLUSH
P-102	TOILET, ADA, MANUAL
P-116	BEDPAN WASHER
P-408	WALL HUNG LAVATORY
P-409	WALL HUNG LAVATORY, WRIST BLADE HANDLES
P-410	WALL HUNG LAVATORY, FOOT PEDALS
P-502	MOP SINK
P-524	INTEGRAL SS SINK, FOOT PEDALS
P-532	UNDERCOUNTER SS SINK, WRIST BLADE HANDLES
P-533	INTEGRAL SINK, WRIST BLADE HANDLES,
P-534	INTEGRAL SINK, FOOT PEDALS
P-535	INTEGRAL SINK, FOOT PEDALS, EMERGENCY EYE WASH
P-609	ELECTRIC WATER COOLER, DUAL HEIGHT

SANITARY PIPING
VENT PIPING
COLD WATER PIPING
HOT WATER PIPING
HOT WATER CIRCULATION PIPING
SD — STORM PIPING
SSD — SECONDARY STORM PIPING

KEYED NOTES

1. 6" SANITARY LINE DOWN TO INTERSTITIAL SPACE CONNECT TO EXISTING 6" SANITARY RISER.
2. 2" SANITARY AND 1 1/2" VENT FOR ICE / WATER DISPENSER.

NORTH

ICU FLOOR PLAN - SANITARY & STORM

SCALE: 3/32" = 1'-0"

PLAN

FULLY SPRINKLERED
CONSTRUCTION DOCUMENTS

No.	Date	Revisions

CONSULTANTS:

STRUCTURAL ENGINEER:
KPFF CONSULTING ENGINEERS - ST. LOUIS
1630 DES PERES RD, SUITE 100
ST. LOUIS, MO 63131

MECHANICAL/ELECTRICAL:
KJWW ENGINEERING CONSULTANTS - ST. LOUIS
#15 SUNNEN DRIVE, SUITE 104
ST. LOUIS, MO 63141

PLUMBING/FIRE PROTECTION:
303RD ENGINEERING GROUP, LLC
1935 ARSENAL STREET
ST. LOUIS, MO 63118

ESTIMATING:
KWAME BUILDING GROUP
1204 WASHINGTON AVE. SUITE 200
ST. LOUIS, MO 63103

LIFE SAFETY:
CODE CONSULTANTS, INC.
2043 WOODLAND PARKWAY, SUITE 300
ST. LOUIS, MO 63146

ACOUSTICAL ENGINEERS:
ACOUSTICONTROL LLC
1709 WASHINGTON AVENUE, LOFT 300
ST. LOUIS, MO 63103

COMMISSIONING:
ZODIAC INTERNATIONAL
16100 CHESTERFIELD PARKWAY, SUITE 365
CHESTERFIELD, MO 63017

ENVIROMENTAL:
EVIROMENTAL CONSULTANTS, LLC
#6 MEADOW HEIGHTS PROFESSIONAL PARK DR.
COLLINSVILLE, IL
62234

ARCHITECT/ENGINEERS:

CHRISTNER
ARCHITECTS | DESIGNERS | PLANNERS | LANDSCAPE ARCHITECTS
168 N MERAMEC, SUITE 400 | ST. LOUIS, MISSOURI 63105
TEL 314 725 2927 | FAX 314 725 2928 | CHRISTNERINC.COM

THE SEAL (S) AND SIGNATURE(S) APPLY ONLY TO THE DOCUMENT TO WHICH THEY ARE AFFIXED, AND WE EXPRESSLY DISCLAIM ANY RESPONSIBILITY FOR ALL OTHER PLANS, SPECIFICATIONS, ESTIMATES, REPORTS, OR OTHER DOCUMENTS OR INSTRUMENTS RELATING TO OR INTENDED TO BE USED FOR ANY PART OF PARTS OF THE PROJECT.
© COPYRIGHT 2012 CHRISTNER INC.

DIRECTOR OF SPECIALTY CARE	INFECTION CONTROL PRACTITIONER	CHIEF ENGINEER	ASSISTANT DIRECTOR	ASSOCIATE DIRECTOR OF PATIENT SERVICES	CHIEF OF STAFF	ASSOCIATE DIRECTOR	MEDICAL CENTER DIRECTOR

Drawing Title: ICU FLOOR PLAN SANITARY & STORM DEDUCT ALTERNATE 4

Project Title: INTENSIVE CARE UNIT

Project Number: 589-330

Building Number: 1

Location: HARRY S. TRUMAN VAMC

Drawing Number: PL103.4

Dwg. 122 of 296

Date	Checked	Drawn	Approved
08/22/14	CKF	JGM	

Office of Construction and Facilities Management

Department of Veterans Affairs

VA FORM 08-6231 PRINTED ON: August 27, 2014 ORIGINAL SIZE OF SHEET IS 30" X 42"

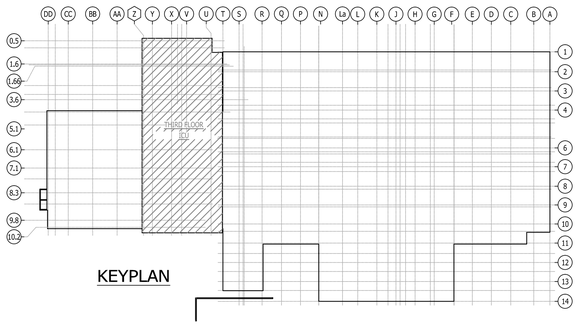

KEYPLAN

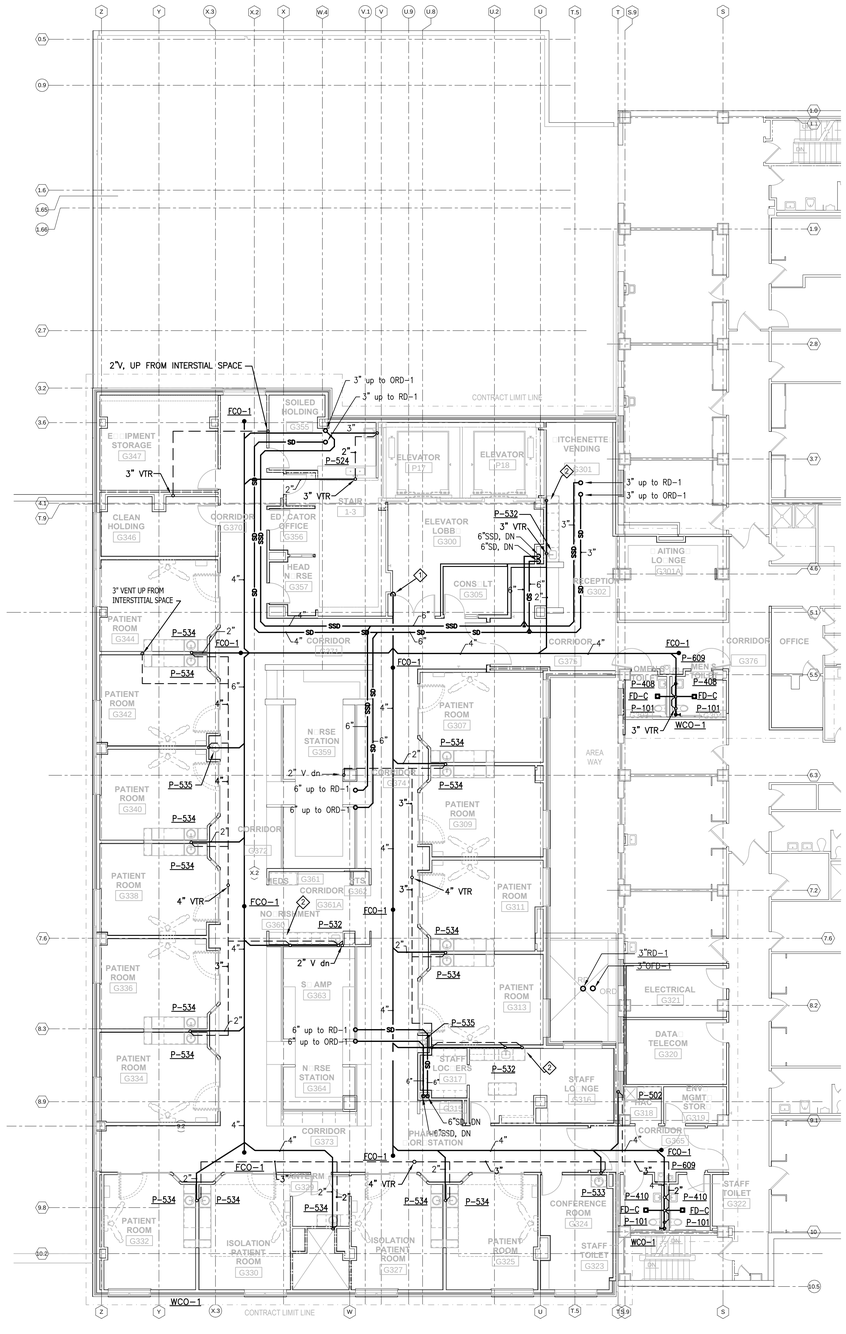

FINISH FLOOR ELEVATION: 126'-5 1/4"
(CONTRACTOR FIELD VERIFY ELEVATION)

LEGEND

P-101	TOILET, SENSOR FLUSH
P-102	TOILET, ADA, MANUAL
P-116	BEDPAN WASHER
P-408	WALL HUNG LAVATORY
P-409	WALL HUNG LAVATORY, WRIST BLADE HANDLES
P-410	WALL HUNG LAVATORY, FOOT PEDALS
P-502	MOP SINK
P-524	INTEGRAL SS SINK, FOOT PEDALS
P-532	UNDERCOUNTER SS SINK, WRIST BLADE HANDLES
P-533	INTEGRAL SINK, WRIST BLADE HANDLES,
P-534	INTEGRAL SINK, FOOT PEDALS
P-535	INTEGRAL SINK, FOOT PEDALS, EMERGENCY EYE WASH
P-609	ELECTRIC WATER COOLER, DUAL HEIGHT CLINIC SINK

SANITARY PIPING
VENT PIPING
COLD WATER PIPING
HOT WATER PIPING
HOT WATER CIRCULATION PIPING
SD — STORM PIPING
SSD — SECONDARY STORM PIPING

KEYED NOTES

1. 6" SANITARY LINE DOWN TO INTERSTITIAL SPACE CONNECT TO EXISTING 6" SANITARY RISER.
2. 2" SANITARY AND 1 1/2" VENT FOR ICE / WATER DISPENSER.

NORTH

ICU FLOOR PLAN - SANITARY & STORM

SCALE: 3/32" = 1'-0"

PLAN

FULLY SPRINKLERED
CONSTRUCTION DOCUMENTS

No.	Date	Revisions

CONSULTANTS:

STRUCTURAL ENGINEER:
KPFF CONSULTING ENGINEERS - ST. LOUIS
1630 DES PERES RD, SUITE 100
ST. LOUIS, MO 63131

MECHANICAL/ELECTRICAL:
KJWW ENGINEERING CONSULTANTS - ST. LOUIS
#15 SUNNEN DRIVE, SUITE 104
ST. LOUIS, MO 63141

PLUMBING/FIRE PROTECTION:
303RD ENGINEERING GROUP, LLC
1935 ARSENAL STREET
ST. LOUIS, MO 63118

ESTIMATING:
KWAME BUILDING GROUP
1204 WASHINGTON AVE. SUITE 200
ST. LOUIS, MO 63103

LIFE SAFETY:
CODE CONSULTANTS, INC.
2043 WOODLAND PARKWAY, SUITE 300
ST. LOUIS, MO 63146

ACOUSTICAL ENGINEERS:
ACOUSTICONTROL LLC
1709 WASHINGTON AVENUE, LOFT 300
ST. LOUIS, MO 63103

COMMISSIONING:
ZOOMC INTERNATIONAL
16100 CHESTERFIELD PARKWAY, SUITE 365
CHESTERFIELD, MO 63017

ENVIROMENTAL:
EVIRONMENTAL CONSULTANTS, LLC
#6 MEADOW HEIGHTS PROFESSIONAL PARK DR.
COLLINSVILLE, IL
62234

ARCHITECT/ENGINEERS:

CHRISTNER
ARCHITECTS | DESIGNERS | PLANNERS | LANDSCAPE ARCHITECTS
168 N MERAMEC, SUITE 400 | ST. LOUIS, MISSOURI 63105
TEL 314 725 2927 | FAX 314 725 2928 | CHRISTNERINC.COM

THE SEAL (S) AND SIGNATURE(S) APPLY ONLY TO THE DOCUMENT TO WHICH THEY ARE AFFIXED, AND WE EXPRESSLY DISCLAIM ANY RESPONSIBILITY FOR ALL OTHER PLANS, SPECIFICATIONS, ESTIMATES, REPORTS, OR OTHER DOCUMENTS OR INSTRUMENTS RELATING TO OR INTENDED TO BE USED FOR ANY PART OF PARTS OF THE PROJECT.
© COPYRIGHT 2012 CHRISTNER INC.

Drawing Title: ICU FLOOR PLAN SANITARY & STORM DEDUCT ALTERNATE 5

DIRECTOR OF SPECIALTY CARE	INFECTION CONTROL PRACTITIONER	CHIEF ENGINEER	ASSISTANT DIRECTOR	ASSOCIATE DIRECTOR OF PATIENT SERVICES	CHIEF OF STAFF	ASSOCIATE DIRECTOR	MEDICAL CENTER DIRECTOR

Project Title: INTENSIVE CARE UNIT

Project Number: 589-330

Building Number: 1

Location: HARRY S. TRUMAN VAMC

Date	Checked	Drawn	Approved
08/22/14	CKF	JGM	

Drawing Number: PL103.5

Dwg. 123 of 296

Office of Construction and Facilities Management

Department of Veterans Affairs

VA FORM 08-6231 PRINTED ON: August 22, 2014 ORIGINAL SIZE OF SHEET IS 30" X 42"

NORTH

ICU ROOF PLAN - SANITARY & STORM

SCALE: 3/32" = 1'-0"

PLAN

FULLY SPRINKLERED CONSTRUCTION DOCUMENTS

No.	Date	Revisions
1	01/14/2015	Amendment #4

CONSULTANTS:

STRUCTURAL ENGINEER:
KPFF CONSULTING ENGINEERS - ST. LOUIS
1630 DES PERES RD, SUITE 100
ST. LOUIS, MO 63131

MECHANICAL/ELECTRICAL:
KJWW ENGINEERING CONSULTANTS - ST. LOUIS
#15 SUNNEN DRIVE, SUITE 104
ST. LOUIS, MO 63141

PLUMBING/FIRE PROTECTION:
303RD ENGINEERING GROUP, LLC
1935 ARSENAL STREET
ST. LOUIS, MO 63118

ESTIMATING:
KWAME BUILDING GROUP
1204 WASHINGTON AVE, SUITE 200
ST. LOUIS, MO 63103

LIFE SAFETY:
CODE CONSULTANTS, INC.
2043 WOODLAND PARKWAY, SUITE 300
ST. LOUIS, MO 63146

ACOUSTICAL ENGINEERS:
ACOUSTICONTROL LLC
1709 WASHINGTON AVENUE, LOFT 300
ST. LOUIS, MO 63103

COMMISSIONING:
ZODIAC INTERNATIONAL
16100 CHESTERFIELD PARKWAY, SUITE 365
CHESTERFIELD, MO 63017

ENVIROMENTAL:
EVIRONMENTAL CONSULTANTS, LLC
#6 MEADOW HEIGHTS PROFESSIONAL PARK DR.
COLLINSVILLE, IL
62234

ARCHITECT/ENGINEERS:

CHRISTNER

ARCHITECTS | DESIGNERS | PLANNERS | LANDSCAPE ARCHITECTS

168 N MERAMEC, SUITE 400 | ST. LOUIS, MISSOURI 63105
TEL 314 725 2927 | FAX 314 725 2928 | CHRISTNERINC.COM

THE SEAL (S) AND SIGNATURE(S) APPLY ONLY TO THE DOCUMENT TO WHICH THEY ARE AFFIXED, AND WE EXPRESSLY DISCLAIM ANY RESPONSIBILITY FOR ALL OTHER PLANS, SPECIFICATIONS, ESTIMATES, REPORTS, OR OTHER DOCUMENTS OR INSTRUMENTS RELATING TO OR INTENDED TO BE USED FOR ANY PART OF PARTS OF THE PROJECT.
© COPYRIGHT 2012 CHRISTNER INC.

DIRECTOR OF SPECIALTY CARE	INFECTION CONTROL PRACTITIONER	CHIEF ENGINEER	ASSISTANT DIRECTOR	ASSOCIATE DIRECTOR OF PATIENT SERVICES	CHIEF OF STAFF	ASSOCIATE DIRECTOR	MEDICAL CENTER DIRECTOR

Drawing Title: ICU ROOF PLAN SANITARY & STORM BASE BID & DEDUCT ALTERNATE 1

Project Title: INTENSIVE CARE UNIT

Location: HARRY S. TRUMAN VAMC

Date	Checked	Drawn	Approved
08/22/14	CKF	JGM	

Project Number: 589-330

Building Number: 1

Drawing Number: PL104.0

Dwg. 124 of 296

Office of Construction and Facilities Management

Department of Veterans Affairs

VA FORM 08-6231 PRINTED ON: January 14, 2015 ORIGINAL SIZE OF SHEET IS 30" X 42"

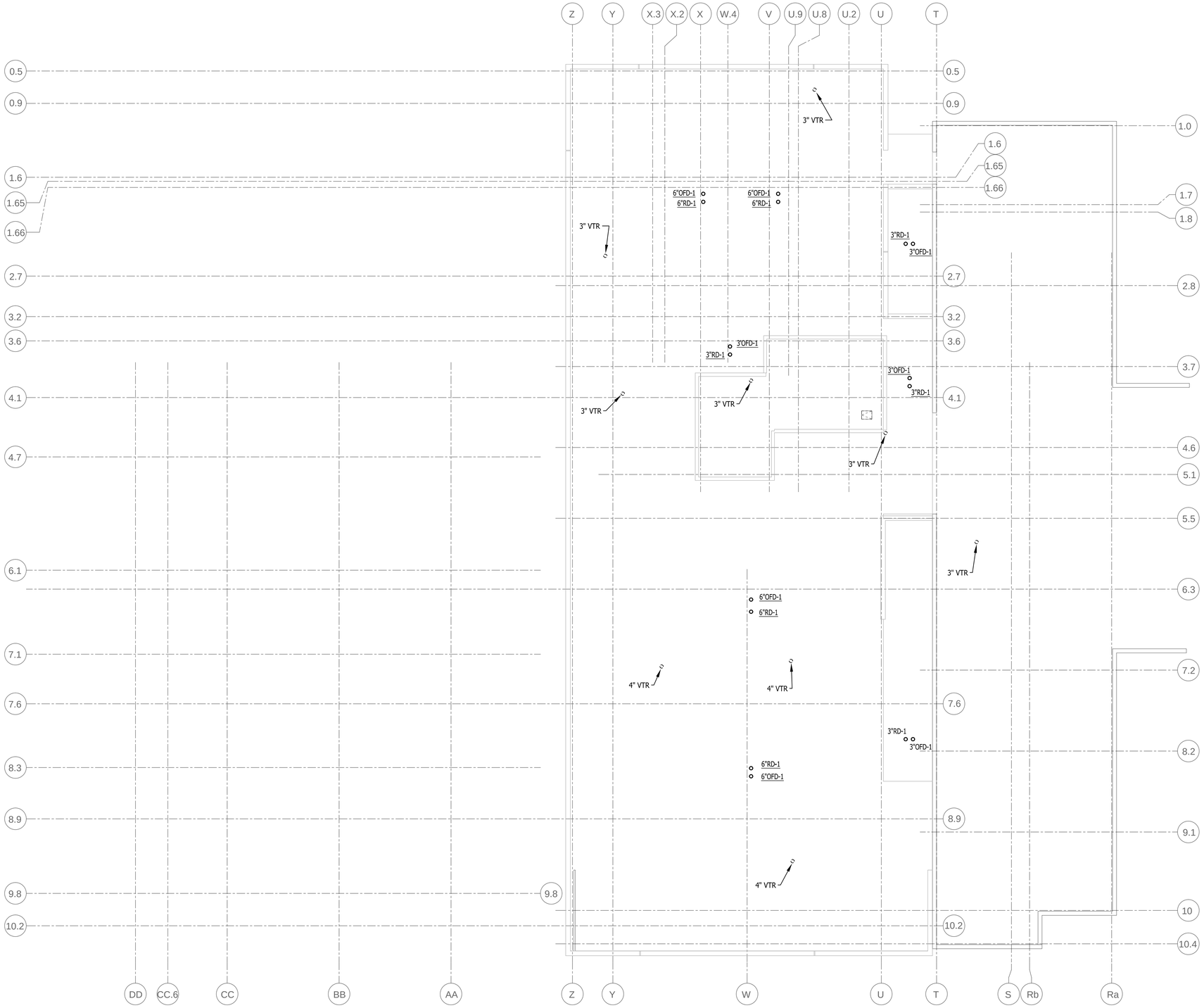

NORTH

ICU ROOF PLAN - SANITARY & STORM

SCALE: 3/32" = 1'-0"

PLAN

FULLY SPRINKLERED
CONSTRUCTION DOCUMENTS

No.	Date	Revisions

CONSULTANTS:

STRUCTURAL ENGINEER:
KPFF CONSULTING ENGINEERS - ST. LOUIS
1630 DES PERES RD, SUITE 100
ST. LOUIS, MO 63131

MECHANICAL/ELECTRICAL:
KJWW ENGINEERING CONSULTANTS - ST. LOUIS
#15 SUNNEN DRIVE, SUITE 104
ST. LOUIS, MO 63141

PLUMBING/FIRE PROTECTION:
303RD ENGINEERING GROUP, LLC
1935 ARSENAL STREET
ST. LOUIS, MO 63118

ESTIMATING:
KWAME BUILDING GROUP
1204 WASHINGTON AVE, SUITE 200
ST. LOUIS, MO 63103

LIFE SAFETY:
CODE CONSULTANTS, INC.
2043 WOODLAND PARKWAY, SUITE 300
ST. LOUIS, MO 63146

ACOUSTICAL ENGINEERS:
ACOUSTICONTROL LLC
1709 WASHINGTON AVENUE, LOFT 300
ST. LOUIS, MO 63103

COMMISSIONING:
ZODIAC INTERNATIONAL
16100 CHESTERFIELD PARKWAY, SUITE 365
CHESTERFIELD, MO 63017

ENVIROMENTAL:
EVIRONMENTAL CONSULTANTS, LLC
#6 MEADOW HEIGHTS PROFESSIONAL PARK DR.
COLLINSVILLE, IL
62234

ARCHITECT/ENGINEERS:

CHRISTNER

ARCHITECTS | DESIGNERS | PLANNERS | LANDSCAPE ARCHITECTS

168 N MERAMEC, SUITE 400 | ST. LOUIS, MISSOURI 63105
TEL 314 725 2927 | FAX 314 725 2928 | CHRISTNERINC.COM

THE SEAL (S) AND SIGNATURE(S) APPLY ONLY TO THE DOCUMENT TO WHICH THEY ARE AFFIXED, AND WE EXPRESSLY DISCLAIM ANY RESPONSIBILITY FOR ALL OTHER PLANS, SPECIFICATIONS, ESTIMATES, REPORTS, OR OTHER DOCUMENTS OR INSTRUMENTS RELATING TO OR INTENDED TO BE USED FOR ANY PART OF PARTS OF THE PROJECT.
© COPYRIGHT 2012 CHRISTNER INC.

DIRECTOR OF SPECIALTY CARE	INFECTION CONTROL PRACTITIONER	CHIEF ENGINEER	ASSISTANT DIRECTOR	ASSOCIATE DIRECTOR OF PATIENT SERVICES	CHIEF OF STAFF	ASSOCIATE DIRECTOR	MEDICAL CENTER DIRECTOR

Drawing Title: ICU ROOF PLAN SANITARY & STORM DEDUCT ALTERNATE 2

Project Title: INTENSIVE CARE UNIT

Project Number: 589-330

Building Number: 1

Location: HARRY S. TRUMAN VAMC

Drawing Number: PL104.2

Date	Checked	Drawn	Approved
08/22/14	CKF	JGM	

Dwg. 125 of 296

Office of Construction and Facilities Management

Department of Veterans Affairs

VA FORM 08-6231 PRINTED ON: August 22, 2014 ORIGINAL SIZE OF SHEET IS 30" X 42"

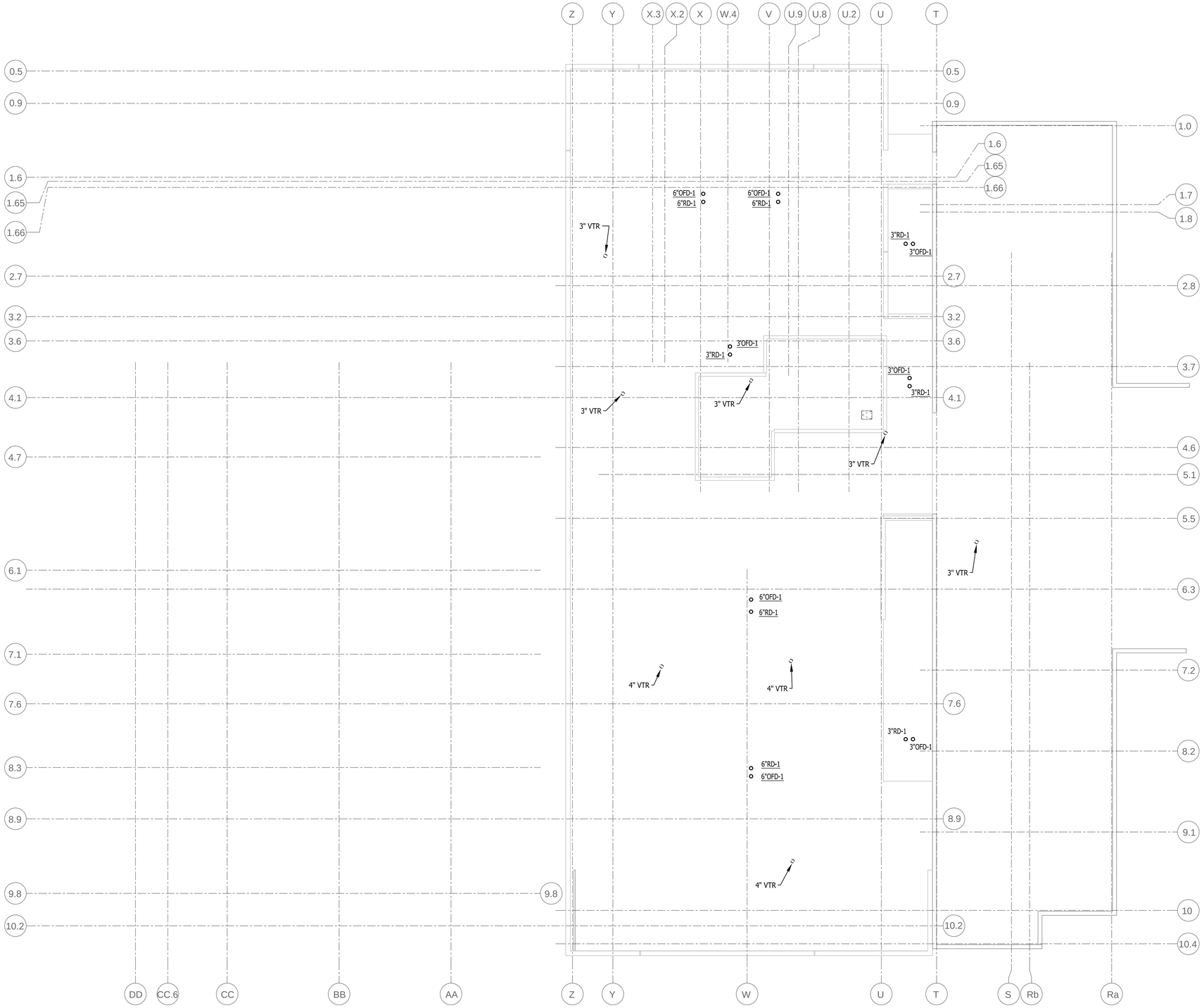

NORTH

ICU ROOF PLAN - SANITARY & STORM

SCALE: 3/32" = 1'-0"

PLAN

FULLY SPRINKLERED CONSTRUCTION DOCUMENTS

No.	Date	Revisions

CONSULTANTS:

STRUCTURAL ENGINEER:
KPFF CONSULTING ENGINEERS - ST. LOUIS
1630 DES PERES RD, SUITE 100
ST. LOUIS, MO 63131

MECHANICAL/ELECTRICAL:
KJWW ENGINEERING CONSULTANTS - ST. LOUIS
#15 SUNNEN DRIVE, SUITE 104
ST. LOUIS, MO 63141

PLUMBING/FIRE PROTECTION:
303RD ENGINEERING GROUP, LLC
1935 ARSENAL STREET
ST. LOUIS, MO 63118

ESTIMATING:
KWAME BUILDING GROUP
1204 WASHINGTON AVE, SUITE 200
ST. LOUIS, MO 63103

LIFE SAFETY:
CODE CONSULTANTS, INC.
2043 WOODLAND PARKWAY, SUITE 300
ST. LOUIS, MO 63146

ACOUSTICAL ENGINEERS:
ACOUSTICONTROL LLC
1709 WASHINGTON AVENUE, LOFT 300
ST. LOUIS, MO 63103

COMMISSIONING:
ZODIAC INTERNATIONAL
16100 CHESTERFIELD PARKWAY, SUITE 365
CHESTERFIELD, MO 63017

ENVIROMENTAL:
EVIRONMENTAL CONSULTANTS, LLC
#6 MEADOW HEIGHTS PROFESSIONAL PARK DR.
COLLINSVILLE, IL
62234

ARCHITECT/ENGINEERS:

CHRISTNER

ARCHITECTS | DESIGNERS | PLANNERS | LANDSCAPE ARCHITECTS

168 N MERAMEC, SUITE 400 | ST. LOUIS, MISSOURI 63105
TEL 314 725 2927 | FAX 314 725 2928 | CHRISTNERINC.COM

THE SEAL (S) AND SIGNATURE(S) APPLY ONLY TO THE DOCUMENT TO WHICH THEY ARE AFFIXED, AND WE EXPRESSLY DISCLAIM ANY RESPONSIBILITY FOR ALL OTHER PLANS, SPECIFICATIONS, ESTIMATES, REPORTS, OR OTHER DOCUMENTS OR INSTRUMENTS RELATING TO OR INTENDED TO BE USED FOR ANY PART OF PARTS OF THE PROJECT.
© COPYRIGHT 2012 CHRISTNER INC.

DIRECTOR OF SPECIALTY CARE	INFECTION CONTROL PRACTITIONER	CHIEF ENGINEER	ASSISTANT DIRECTOR	ASSOCIATE DIRECTOR OF PATIENT SERVICES	CHIEF OF STAFF	ASSOCIATE DIRECTOR	MEDICAL CENTER DIRECTOR

Drawing Title: ICU ROOF PLAN SANITARY & STORM DEDUCT ALTERNATE 3

Project Title: INTENSIVE CARE UNIT

Project Number: 589-330

Building Number: 1

Location: HARRY S. TRUMAN VAMC

Drawing Number: PL104.3

Date	Checked	Drawn	Approved
08/22/14	CKF	JGM	

Dwg. 126 of 296

Office of Construction and Facilities Management

Department of Veterans Affairs

VA FORM 08-6231 PRINTED ON: August 22, 2014 ORIGINAL SIZE OF SHEET IS 30" X 42"

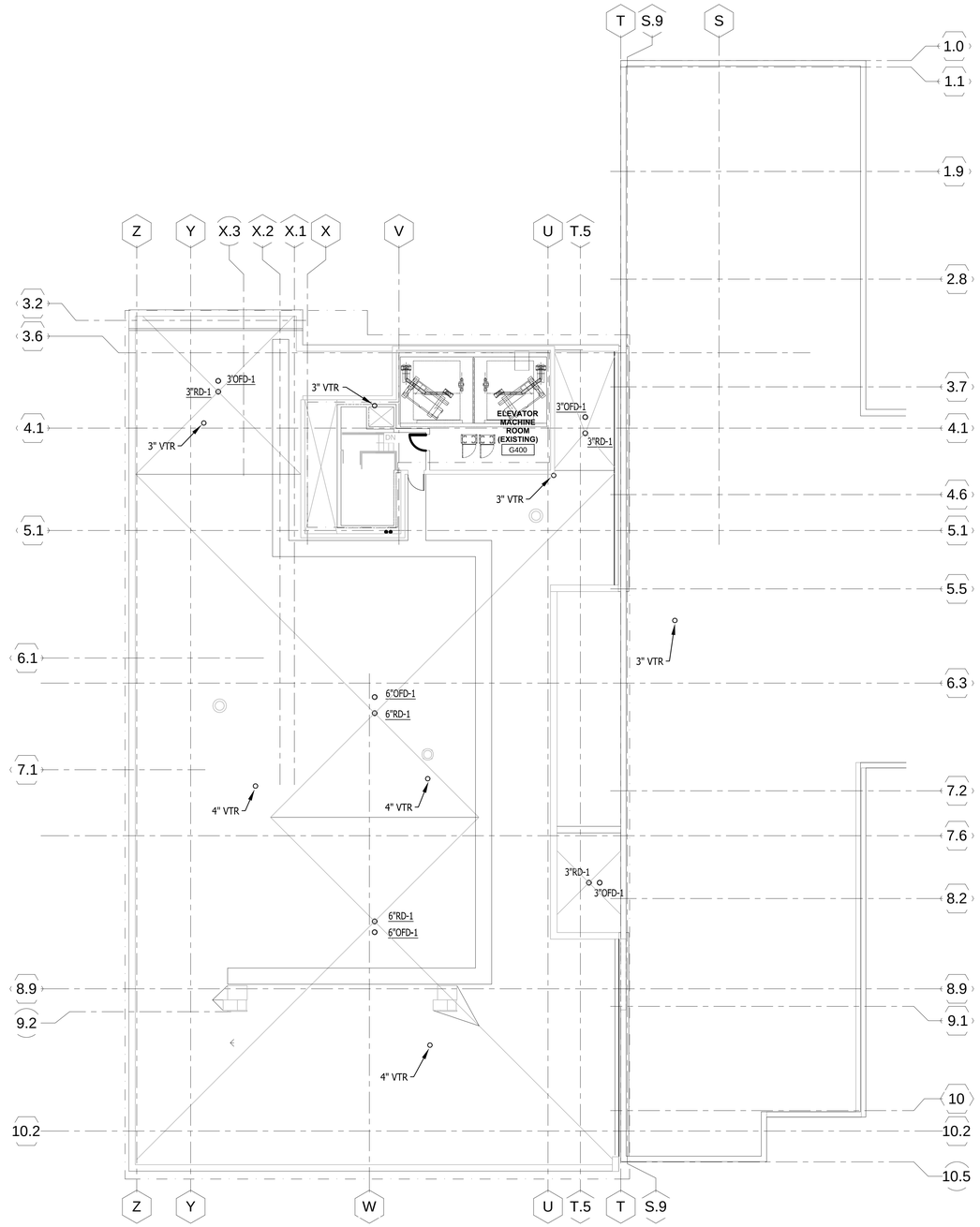

NORTH

ICU ROOF PLAN - SANITARY & STORM

SCALE: 3/32" = 1'-0"

PLAN

FULLY SPRINKLERED
CONSTRUCTION DOCUMENTS

No.	Date	Revisions

CONSULTANTS:

STRUCTURAL ENGINEER:
KPFF CONSULTING ENGINEERS - ST. LOUIS
1630 DES PERES RD, SUITE 100
ST. LOUIS, MO 63131

MECHANICAL/ELECTRICAL:
KJWW ENGINEERING CONSULTANTS - ST. LOUIS
#15 SUNNEN DRIVE, SUITE 104
ST. LOUIS, MO 63141

PLUMBING/FIRE PROTECTION:
303RD ENGINEERING GROUP, LLC
1935 ARSENAL STREET
ST. LOUIS, MO 63118

ESTIMATING:
KWAME BUILDING GROUP
1204 WASHINGTON AVE, SUITE 200
ST. LOUIS, MO 63103

LIFE SAFETY:
CODE CONSULTANTS, INC.
2043 WOODLAND PARKWAY, SUITE 300
ST. LOUIS, MO 63146

ACOUSTICAL ENGINEERS:
ACOUSTICONTROL LLC
1709 WASHINGTON AVENUE, LOFT 300
ST. LOUIS, MO 63103

COMMISSIONING:
ZODIAC INTERNATIONAL
16100 CHESTERFIELD PARKWAY, SUITE 365
CHESTERFIELD, MO 63017

ENVIROMENTAL:
EVIRONMENTAL CONSULTANTS, LLC
#6 MEADOW HEIGHTS PROFESSIONAL PARK DR.
COLLINSVILLE, IL
62234

ARCHITECT/ENGINEERS:

CHRISTNER

ARCHITECTS | DESIGNERS | PLANNERS | LANDSCAPE ARCHITECTS

168 N MERAMEC, SUITE 400 | ST. LOUIS, MISSOURI 63105
TEL 314 725 2927 | FAX 314 725 2928 | CHRISTNERINC.COM

THE SEAL (S) AND SIGNATURE(S) APPLY ONLY TO THE DOCUMENT TO WHICH THEY ARE AFFIXED, AND WE EXPRESSLY DISCLAIM ANY RESPONSIBILITY FOR ALL OTHER PLANS, SPECIFICATIONS, ESTIMATES, REPORTS, OR OTHER DOCUMENTS OR INSTRUMENTS RELATING TO OR INTENDED TO BE USED FOR ANY PART OF PARTS OF THE PROJECT.
© COPYRIGHT 2012 CHRISTNER INC.

DIRECTOR OF SPECIALTY CARE	INFECTION CONTROL PRACTITIONER	CHIEF ENGINEER	ASSISTANT DIRECTOR	ASSOCIATE DIRECTOR OF PATIENT SERVICES	CHIEF OF STAFF	ASSOCIATE DIRECTOR	MEDICAL CENTER DIRECTOR

Drawing Title
ICU ROOF PLAN
SANITARY & STORM
DEDUCT ALTERNATES 4 & 5

Project Title
INTENSIVE CARE UNIT

Project Number
589-330

Building Number
1

Location
HARRY S. TRUMAN VAMC

Date	Checked	Drawn	Approved
08/22/14	CKF	JGM	

Drawing Number
PL104.4

Dwg. 127 of 296

Office of Construction and Facilities Management

Department of Veterans Affairs

VA FORM 08-6231 PRINTED ON: August 27, 2014 ORIGINAL SIZE OF SHEET IS 30" X 42"