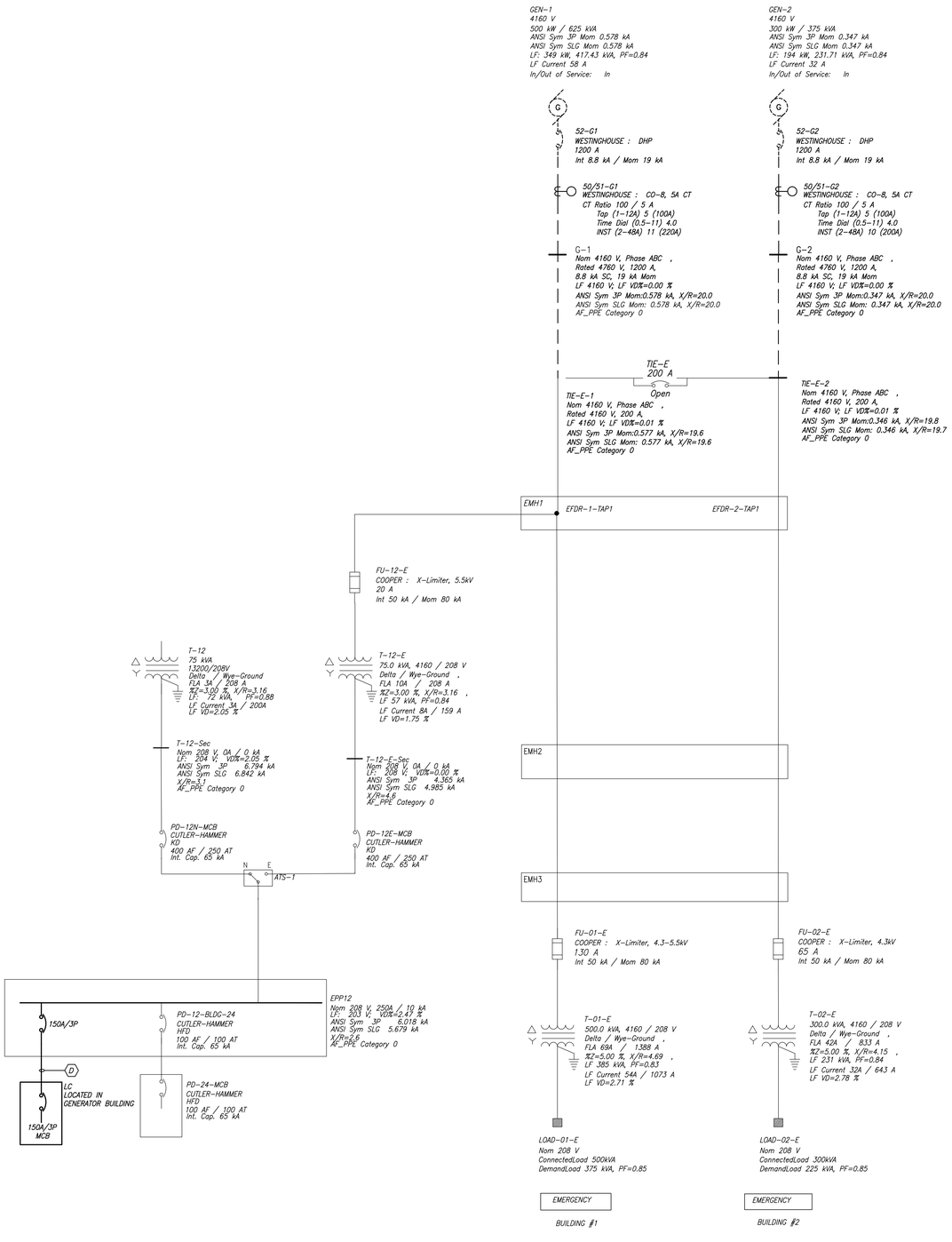

1 E301 ONE-LINE DIAGRAM – REMOVAL

SCALE: NONE

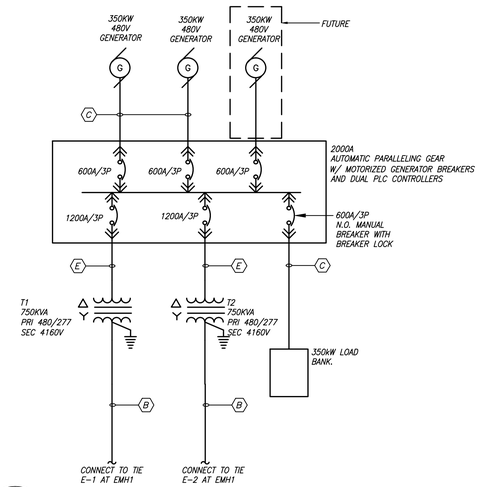

2 E301 ONE-LINE DIAGRAM

SCALE: NONE

FEEDER SCHEDULE WIRE SIZE IN AWG

NO.	AMPACITY	PHASE	NEUTRAL	GROUND	CONDUIT
B	150A/3P	3-#1/0 15KV CABLE	1-#1/0 15KV CABLE	1-#6 15KV CABLE	4"C
C	600A/3P	2 SETS OF 3-#350KCM	2 SETS OF 1-#350KCM	2 SETS OF 1-#1	(2) 4"
D	150A/3P	3-#1/0	1-#1/0	1-#6	2 1/2"
E	1200A/3P	4 SETS OF 3-#350KCM	–	4 SETS OF 1-#3/0	(4) 4"

GENERAL NOTES:

A. EXTEND ALL EXISTING ATS WIRING TO NEW GENERATOR PARALLELING GEAR. LOSS OF POWER OF NORMAL ON ANY ONE TRANSFER SWITCH SHALL START ALL THREE GENERATORS. GENERATORS SHALL LOAD SHARE ONCE SYSTEM IS ON LINE.

Revisions	Date
100% SUBMISSION	02-06-14

VA WESTERN NEW YORK HEALTHCARE SYSTEM
222 RICHMOND AVENUE
BATAVIA, NEW YORK 14020

ECAB engineering, p.c.
15 Schoen Place
Suite 300
Pittsford, NY 14534
Phone: (585) 641-7121
Fax: (585) 362-4175
www.ecab.com

Consultant

stamp

Architect / Engineer

CARDIOLOGY MANAGER	DATE	ENGINEERING MANAGER	DATE
INFECTION CONTROL	DATE	CARELINE MANAGER	DATE
SAFETY OFFICER	DATE	CHIEF OF STAFF	DATE

MEDICAL CENTER DIRECTOR DATE

ASSOCIATE MEDICAL CENTER DIRECTOR DATE

Drawing Title: ELECTRICAL ONE-LINE

Project Title: VA BATAVIA EMERGENCY POWER UPGRADES

Building Number: 1

Checked: EJS

Drawn: RS

Location: V.A.M.C. BATAVIA, NEW YORK

Date: June 6, 2014

Station No.: 528-13-201

13-201-E301

Office of Facilities

Department of Veterans Affairs