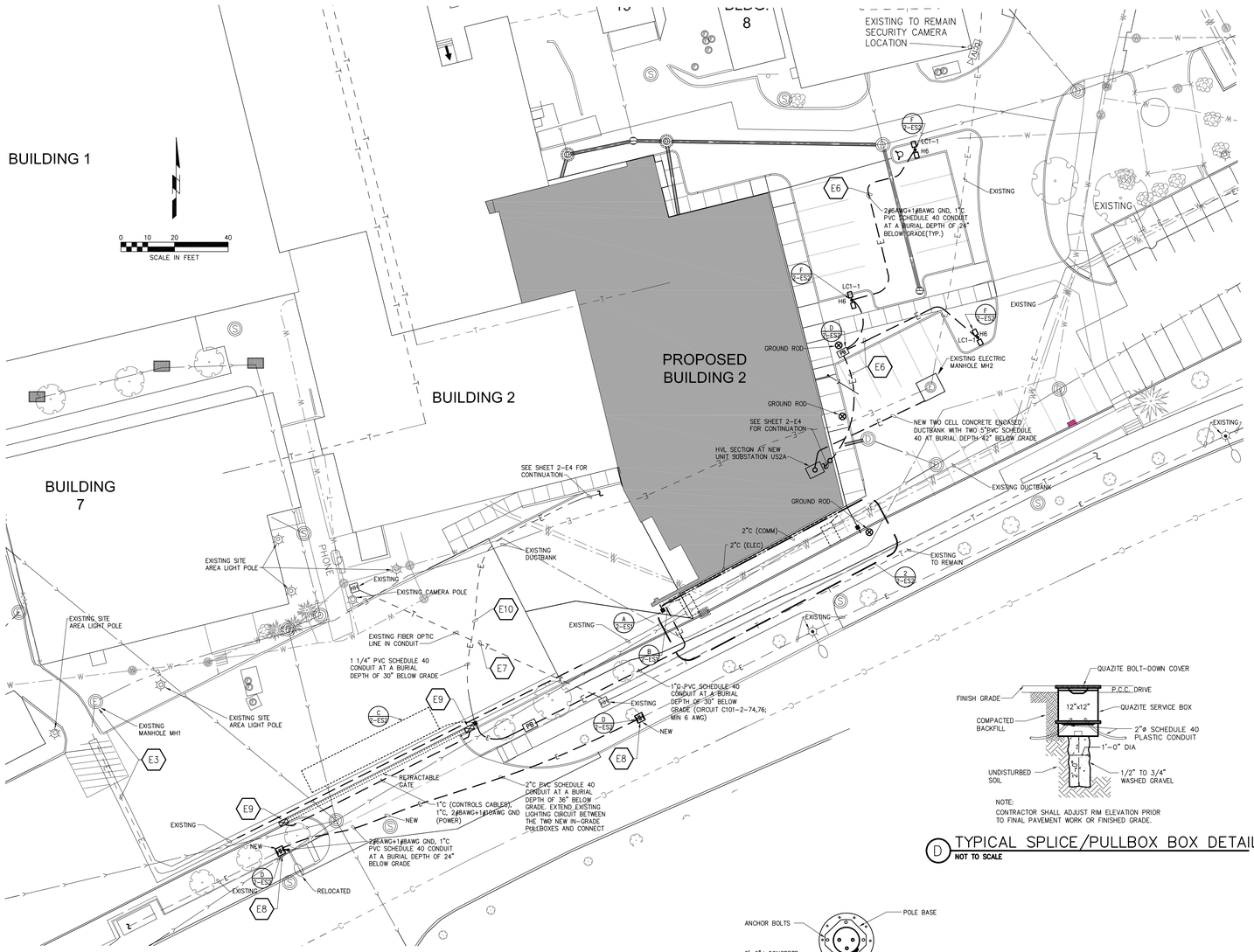

1 SITE PLAN – ELECTRICAL
1" = 20'-0"

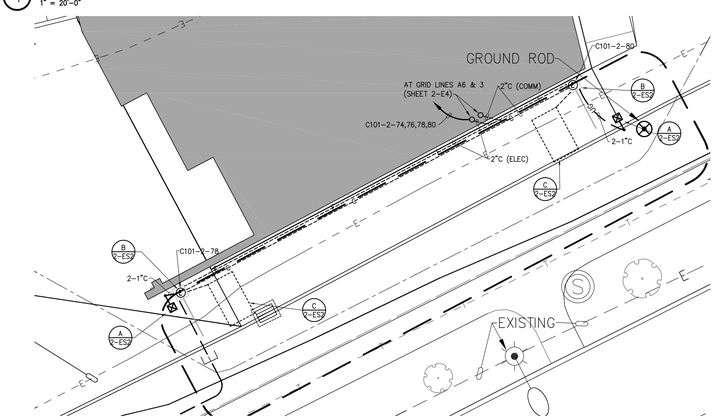

2 SITE GATE ACCESS PLAN – ELECTRICAL
1" = 10'-0"

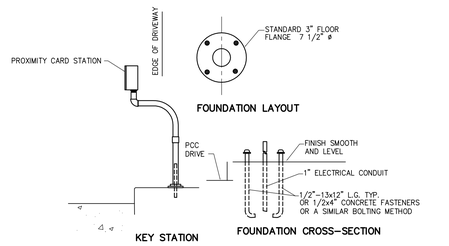

A CONTROL STATION DETAILS
1/2"=1'-0"

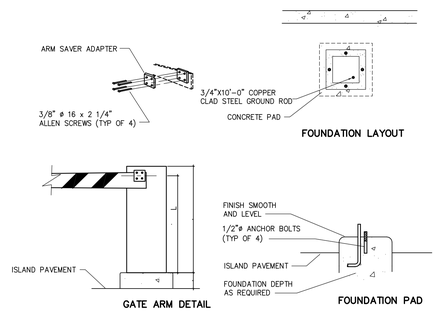

B G-90 GATE DETAILS
1/2"=1'-0"

D TYPICAL SPLICE/PULLBOX BOX DETAIL
NOT TO SCALE

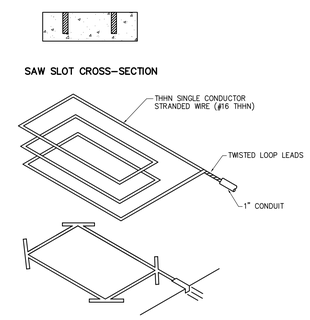

C DETECTOR LOOP DETAIL
1/4"=1'-0"

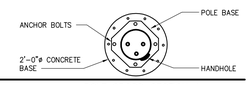

POLE CROSS-SECTION A

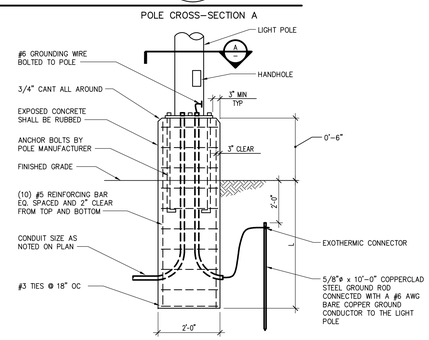

TABLE "L"

POLE HEIGHT	DEPTH "L"
25	7'-6"

NOTES:
1. USE 4000 PSI 28 DAY STRENGTH CONCRETE FOR POLE BASE.
2. PLACE CONCRETE THE SAME DAY BASE IS DRILLED.
3. VARIFY ANCHOR BOLT LOCATIONS WITH MANFACTURER'S TEMPLATE PRIOR TO BASE CONSTRUCTION.

F LIGHT POLE BASE DETAIL
NOT TO SCALE

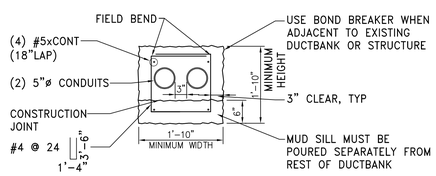

E 2-CELL 15kV ELECTRIC DUCTBANK – STANDARD CONFIGURATION
NOT TO SCALE

1. CONTRACTOR SHALL VERIFY ALL DIMENSIONS PRIOR TO BIDDING OR PURCHASING MATERIALS DUE TO VARYING CONDUIT SIZES AND SPACING.
2. CONDUIT SHALL BE PVC, EXCEPT AT TERMINATIONS, SWEEPS AND CONSTRUCTION JOINTS, WHERE IT SHALL BE RIGID STEEL.
3. CONCRETE FOR ELECTRIC DUCTBANKS SHALL BE DYED RED. MUD SILL NOT REQUIRED TO BE DYED RED.
4. ALL REINFORCING SHALL BE EPOXY-COATED.
5. CONTRACTOR TO VERIFY ALL REINFORCING STEEL DIMENSIONS PRIOR TO FABRICATION.
6. ELECTRIC DUCTBANK CABLING INSTALLATION BY ELECTRICAL CONTRACTOR. CONTRACTOR TO PROVIDE ALL PATHWAYS AS SHOWN TO FACILITATE INSTALLATION OF CABLING. ALL CONDUITS SHALL BE MANDREL TESTED BY CONTRACTOR AND WITNESSED BY OWNER.
7. PROVIDE 6" MINIMUM THICK MUD SLAB. PROVIDE GREATER THICKNESS IF MUD SLAB IS USED TO LEVEL GRADE.
8. VAULT PENETRATIONS TO BE COORDINATED WITH VA ELECTRICAL DISTRIBUTION STAFF. CONTRACTOR SHALL VERIFY FINAL CONNECTION LOCATIONS WITH VA ELECTRICAL DISTRIBUTION STAFF PRIOR TO CORE-DRILLING OPENINGS IN VAULT.

GENERAL ELECTRICAL NOTES:

1. REFER TO ARCHITECTURAL DRAWING AND ELEVATIONS FOR FINAL LOCATIONS OF ALL DEVICES MOUNTED ABOVE COUNTER.
2. REFER TO ARCHITECTURAL DRAWINGS AND ELEVATIONS FOR STANDARD MOUNTING HEIGHTS, EQUIPMENT DESCRIPTIONS AND EQUIPMENT FINAL LOCATIONS.
3. PROVIDE A GREEN INSULATED GROUNDING CONDUCTOR FOR ALL EQUIPMENT, LIGHT FIXTURES AND RECEPTACLES.

REFERENCED ELECTRICAL NOTES:

E1 NOT USED.

E2 NOT USED.

E3 PROVIDE A SPLICE IN EXISTING MANHOLE MH1 AND PROVIDE NEW 15kV CONDUCTORS PER THE ONE-LINE FROM MANHOLE MH1 TO MANHOLE MH3.

E4 RESEARCH BUILDINGS SHALL RESUME ON GENERATOR POWER AND 15kV CIRCUIT HV1 SHALL BE DISCONNECTED FROM MANHOLE MH3. NEW 15kV CONDUCTORS OF CIRCUIT HV2 SHALL BE RECONNECTED TO THE RESEARCH BUILDINGS.

E5 NOT USED.

E6 FURNISH AND INSTALL ONE(1) 2#6AWG+1#8AWG GND, 1"PVC SCHEDULE 40 CONDUIT AT A BURIAL DEPTH OF 30" BELOW GRADE. SEE DETAIL 2, SHEET 2-E8.

E7 THE EXISTING FIBER OPTIC LINE SHALL BE LOCATED AND PROTECTED DURING CONSTRUCTION.

E8 CONTRACTOR SHALL LOCATE EXISTING ROADWAY LIGHTING CIRCUIT CONDUIT AND LOCATE THE INDICATED PULLBOX.

E9 ROLLING GATE POWER ENCLOSURE WITH 1/2 HP MOTOR. CONNECT CIRCUIT C101-2-74 TO ONE POWER ENCLOSURE AND CONNECT CIRCUIT C101-2-76 TO THE SECOND POWER ENCLOSURE.

E10 FURNISH AND INSTALL ONE CONTROL STATION WITHIN THE DOCK AREA AS SHOWN ON SHEET 2-E4 TO OPERATE THE ROLLING GATE. PROVIDE CONTROL WIRING IN THE INDICATED CONDUIT.

Revisions	Date

SHIVEHATTERY
ARCHITECTURE + ENGINEERING
2834 Northgate Drive | Iowa City, Iowa 52245
319.354.3040 | fax: 319.354.6921 | shive-hattery.com
Iowa | Illinois | Missouri

Drawing Title: ELECTRICAL SITE PLAN
Project Title: RENOVATE AND EXPAND SPACE FOR PATIENT SUPPORT AREAS
Date: 12-05-2014 CONSTRUCTION DOCUMENTS
Project No. DVA#636-311 S-H#110240-0
Approved: Division Chief
Building Number: 2
Checked: JJH
Drawn: DMM
DRAWING NO. 2-ES2
Approved: Service Director
Location: IOWA CITY VA HEALTH CARE SYSTEM IOWA CITY, IOWA
Dwg. 2 Of 15
Veterans Administration