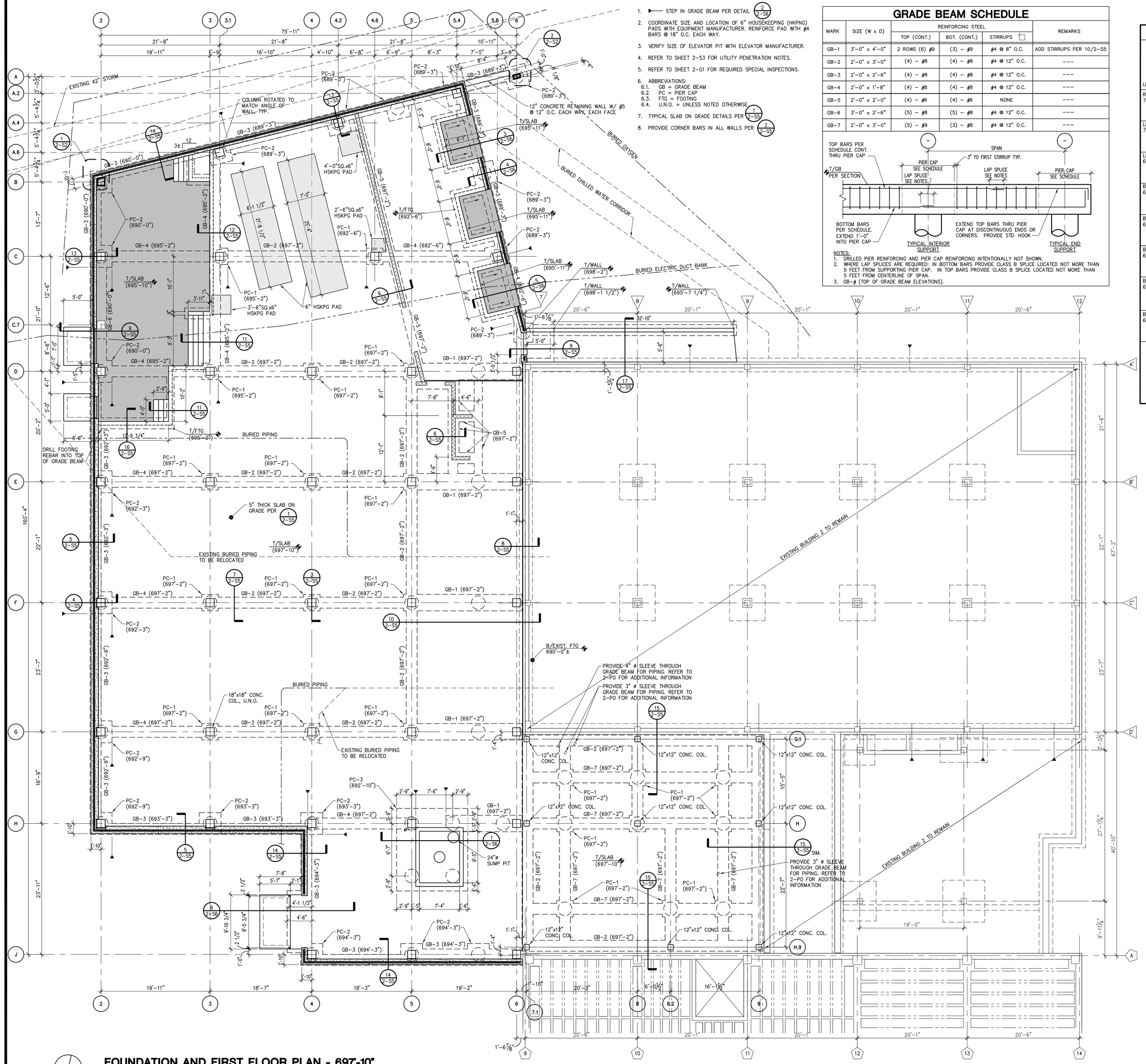

FOUNDATION AND FIRST FLOOR PLAN - 697'-10"

1/8"=1'-0"

GENERAL PLAN NOTES

1. STEP IN GRADE BEAM PER DETAIL 2/2-S5
2. COORDINATE SIZE AND LOCATION OF 6" HOUSEKEEPING (HKPNG) PADS WITH EQUIPMENT MANUFACTURER. REINFORCE PAD WITH #4 BARS @ 18" O.C. EACH WAY.
3. VERIFY SIZE OF ELEVATOR PIT WITH ELEVATOR MANUFACTURER.
4. REFER TO SHEET 2-S3 FOR UTILITY PENETRATION NOTES.
5. REFER TO SHEET 2-G1 FOR REQUIRED SPECIAL INSPECTIONS.
6. ABBREVIATIONS:
   6.1. GB = GRADE BEAM
   6.2. PC = PIER CAP
   6.3. FTG = FOOTING
   6.4. U.N.O. = UNLESS NOTED OTHERWISE
7. TYPICAL SLAB ON GRADE DETAILS PER 1/2-S5
8. PROVIDE CORNER BARS IN ALL WALLS PER 2/2-S5

GRADE BEAM SCHEDULE

MARK	SIZE (W x D)	REINFORCING STEEL TOP (CONT.)	BOT. (CONT.)	STIRRUPS	REMARKS
GB-1	3'-0" x 4'-0"	2 ROWS (6) #9	(3) – #9	#4 @ 8" O.C.	ADD STIRRUPS PER 10/2-S5
GB-2	2'-0" x 3'-0"	(4) – #8	(4) – #8	#4 @ 12" O.C.	---
GB-3	2'-0" x 2'-6"	(4) – #8	(4) – #8	#4 @ 12" O.C.	---
GB-4	2'-0" x 1'-8"	(4) – #8	(4) – #8	#4 @ 12" O.C.	---
GB-5	2'-0" x 2'-0"	(4) – #6	(4) – #6	NONE	---
GB-6	3'-0" x 2'-6"	(5) – #8	(5) – #8	#4 @ 12" O.C.	---
GB-7	2'-0" x 3'-0"	(5) – #9	(3) – #8	#4 @ 12" O.C.	---

NOTES:
1. DRILLED PIER REINFORCING AND PIER CAP REINFORCING INTENTIONALLY NOT SHOWN.
2. WHERE LAP SPLICES ARE REQUIRED: IN BOTTOM BARS PROVIDE CLASS B SPLICE LOCATED NOT MORE THAN 5 FEET FROM SUPPORTING PIER CAP. IN TOP BARS PROVIDE CLASS B SPLICE LOCATED NOT MORE THAN 5 FEET FROM CENTERLINE OF SPAN.
3. GB-# (TOP OF GRADE BEAM ELEVATIONS).

CONCRETE COLUMN SCHEDULE

LEVEL	COLUMN LOCATIONS	A–6	B–2	A.2–5.4, A.4–4.2, A.6–3.1, C–2, C–5.8	C–3.1 C–4.6	C.7–2	D–2	G–2, H–2, H–3	D–3, D–4, D–5, D–6, E–3, E–4, E–5, E–6, F–3, F–4, F–5, F–6, G–3, G–4, G–5, G–6, H–4, H–5, H–6, J–4, J–5, J–6	E–2, F–2	G.1–7.1, G.1–8, G.1–9, H–7.1, H–8, H–9, H.9–7.1, H.9–8.2, H.9–9
ROOF 724'-11 3/4"	SIZE										
	VERT. REINF.										
	TIES										
LEVEL 2 711'-0"	SIZE										
	VERT. REINF.										
	TIES										
LEVEL 1 697'-10"	SIZE										
	VERT. REINF.										
	TIES										
B/COL 697'-2"	SIZE				18" x 18"				18" x 18"		12" x 12"
	VERT. REINF.				(8) #7				(8) #7		(4) #6
	TIES				#3 @ 8"O.C.				#3 @ 8"O.C.		#3 @ 12"O.C.
B/COL 695'-6"	SIZE							18" x 18"			
	VERT. REINF.							(8) #7			
	TIES							#3 @ 8"O.C.			
B/COL 694'-6"	SIZE									18" x 18"	
	VERT. REINF.									(8) #7	
	TIES									#3 @ 8"O.C.	
B/COL 693'-6"	SIZE					18" x 18"	18" x 18"				
	VERT. REINF.					(8) #7	(8) #7				
	TIES					#3 @ 8"O.C.	#3 @ 8"O.C.				
B/COL 692'-6"	SIZE	2/2–S2	1/2–S2	18" x 18"							
	VERT. REINF.	(6) #7	(6) #7	(8) #7							
	TIES	#3 @ 8"O.C.	#3 @ 8"O.C.	#3 @ 8"O.C.							

CONCRETE COLUMN SCHEDULE NOTES:
1. COLUMN CONCRETE STRENGTH F'c= 4000 PSI, TYP.
2. REFER TO FOUNDATION DETAILS FOR COLUMN FOUNDATION DOWEL REQUIREMENTS.
3. SEE DETAIL 3/2–S2 FOR COLUMN TIE REQUIREMENTS.
4. SEE DETAIL 4/2–S2 FOR COLUMN REINFORCING LAP SPLICE LENGTHS.
5. SEE DETAIL 1/2–S7 FOR TYPICAL COLUMN SPLICE AT FLOOR LINE.
6. SEE DETAIL 2/2–S7 FOR TYPICAL COLUMN TERMINATION AT ELEVATION 711'-0".
7. SEE DETAIL 13/2–S7 FOR TYPICAL COLUMN TERMINATION AT ELEVATION 724'-11¾".

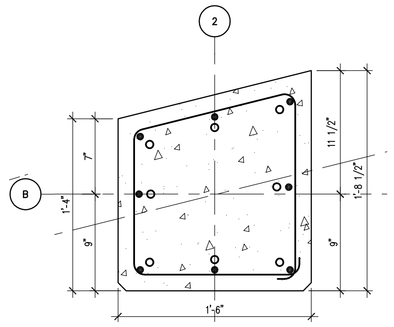

1 COLUMN B-2 DETAIL
1 1/2"=1'-0"

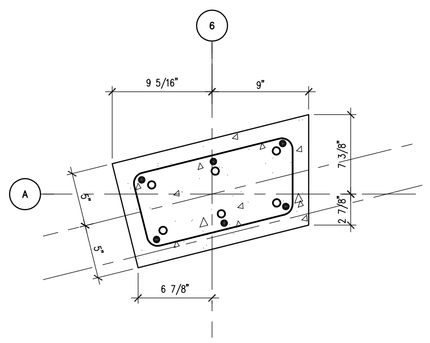

2 COLUMN A-6 DETAIL
1 1/2"=1'-0"

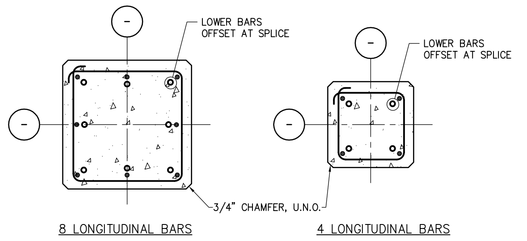

NOTES:
1. ALL HOOKS TO BE FABRICATED AS REQUIRED BY ACI.
2. CONCRETE COVER TO TIES SHALL BE 1 1/2".
3. ALTERNATE HOOKS IN PLACING SUCCESSIVE SETS OF TIES.

3 COLUMN TIE REQUIREMENTS
1"=1'-0"

COLUMN LAP SPLICE LENGTH

FOR GRADE 60 REINFORCING BARS (NORMAL WEIGHT CONCRETE)

BAR SIZE	F'c = 4000 PSI CLASS B (1.3 Ld)
#5	32
#6	38
#7	55
#8	63
#9	71

NOTES:
1. Ld = TENSION DEVELOPMENT LENGTH
2. ALL SPLICE LENGTH ARE IN INCHES.
3. WHEN LAP SPLICING BARS OF DIFFERENT SIZES, THE LAP LENGTH IS DETERMINED BY THE LARGER BAR.
4. LAP SPLICE LENGTH SHOWN IN THIS TABLE ARE VALID FOR COLUMNS ONLY AND SHALL NOT BE USED FOR OTHER STRUCTURAL ELEMENTS.

4 COLUMN LAP SPLICE LENGTH
1"=1'-0"

PIER CAP SCHEDULE

MARK	PIER DIA., TYP.	CAP SIZE	DEPTH	REINFORCING
PC–1	30"	3'–0" x 3'–0"	3'–0"	(4) #6 BARS EACH WAY, TOP AND BOTTOM
PC–2	30"	4'–0" x 4'–0"	2'–6"	(5) #6 BARS EACH WAY, TOP AND BOTTOM
PC–3	30"	13'–0" x 15'–2"	3'–0"	#6 BARS @ 12"O.C., EACH WAY, TOP AND BOTTOM

1. PIER CAPS ARE CENTERED OVER PIERS, U.N.O.
2. PC–# (TOP OF CAP ELEVATION)

5 PIER CAP SCHEDULE
1"=1'-0"

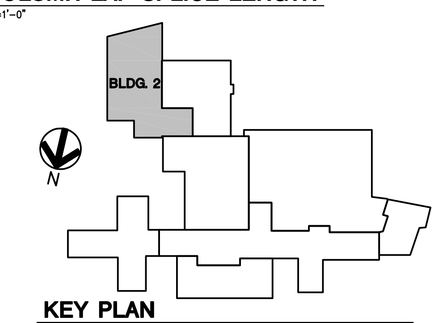

KEY PLAN
NOT TO SCALE

2-1

Revisions	Date

SHIVEHATTERY
ARCHITECTURE + ENGINEERING
2834 Northgate Drive | Iowa City, Iowa 52245
319.354.3040 | fax: 319.354.6921 | shive-hattery.com
Iowa | Illinois | Missouri

Drawing Title: FOUNDATION PLAN AND COLUMN SCHEDULE

Project Title: RENOVATE AND EXPAND SPACE FOR PATIENT SUPPORT AREAS

Date 12–05–2014 CONSTRUCTION DOCUMENTS

Project No. DVA#636–311 S–H#110240–0

Approved: Division Chief

Building Number 2 | Checked MM | Drawn KLH

Approved: Service Director

Location: IOWA CITY VA HEALTH CARE SYSTEM, IOWA CITY, IOWA

DRAWING NO. 2-S2

Dwg. 4 Of 16

Veterans Administration