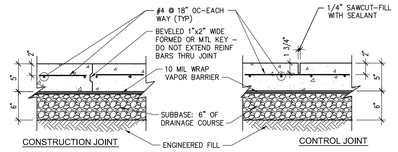

NOTE:
SLAB ON GRADE CONCRETE TO HAVE W/C RATIO OF 0.40 TO 0.45, MINIMUM CEMENTITIOUS MATERIAL OF 600 LB/CY. MAX. SLUMP TO BE 4". LOW AND MID RANGE WATER REDUCERS MAY BE SUBMITTED FOR APPROVAL AS POSSIBLE ADMIXTURES TO MEET CONSTRUCTABILITY REQUIREMENTS.

1 TYPICAL SLAB ON GRADE DETAILS
1"=1'-0"

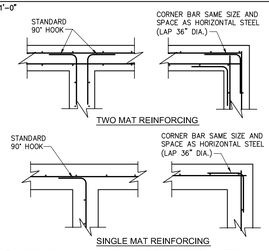

2 TYPICAL WALL CORNER DETAILS
NOT TO SCALE

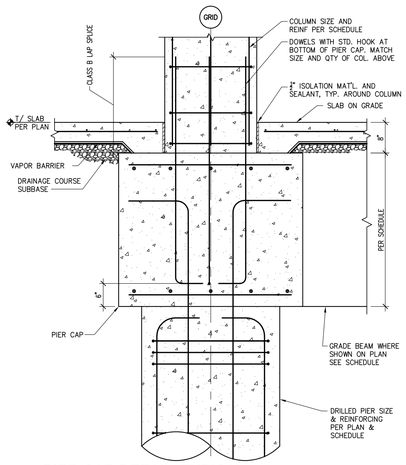

3 PIER CAP DETAIL, TYPICAL
3/4"=1'-0"

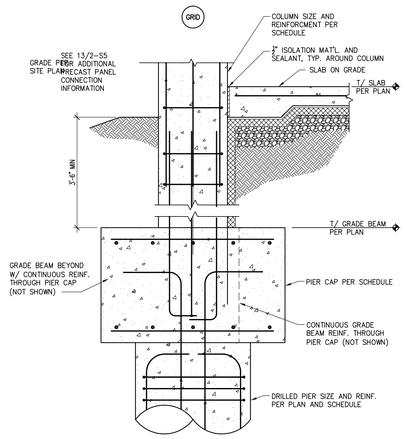

4 EXTERIOR GRADE BEAM AT COLUMN
3/4"=1'-0"

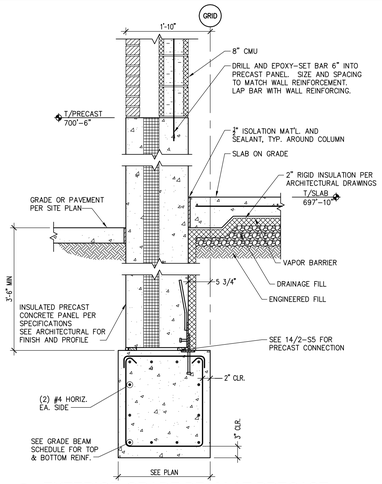

5 EXTERIOR GRADE BEAM AT PRECAST
3/4"=1'-0"

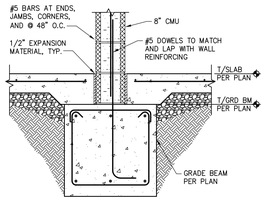

6 INTERIOR GRADE BEAM AT CMU
3/4"=1'-0"

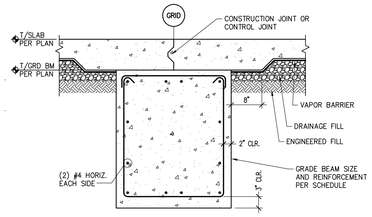

7 TYPICAL INTERIOR GRADE BEAM
3/4"=1'-0"

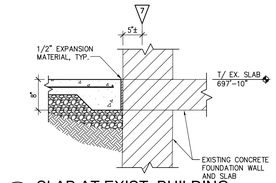

8 SLAB AT EXIST. BUILDING
3/4"=1'-0"

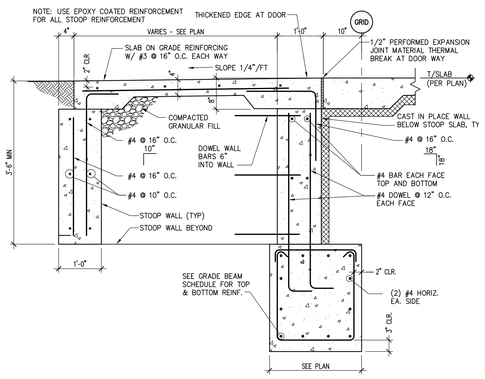

9 TYPICAL CONCRETE STOOP DETAIL
3/4"=1'-0"

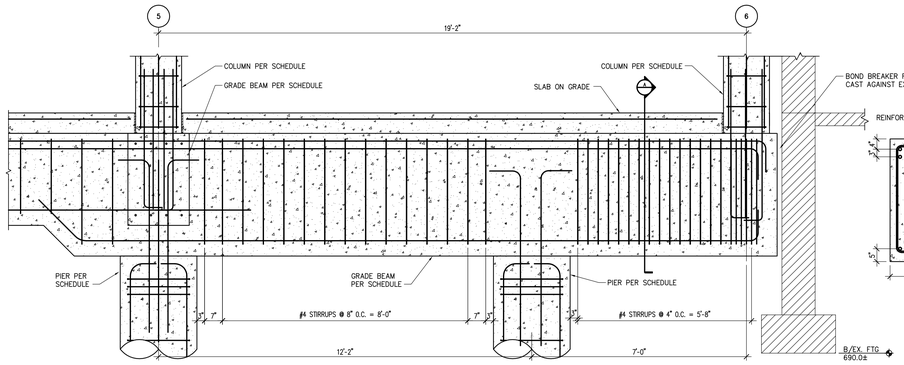

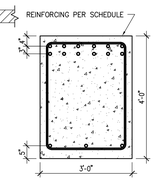

SECTION A

10 GRADE BEAM ELEVATION
1/2"=1'-0"

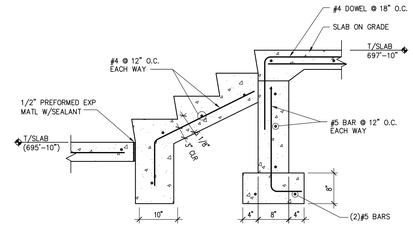

11 STAIR DETAIL
3/4" = 1'-0"

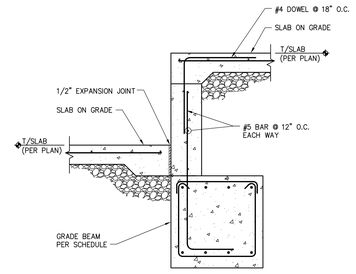

12 WALL SECTION
3/4" = 1'-0"

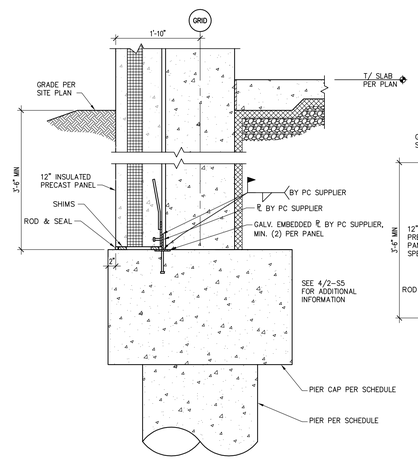

13 PRECAST AT COLUMN
3/4"=1'-0"

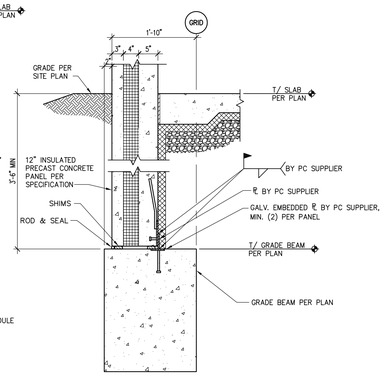

14 EXTERIOR GRADE BEAM AT PRECAST
3/4"=1'-0"

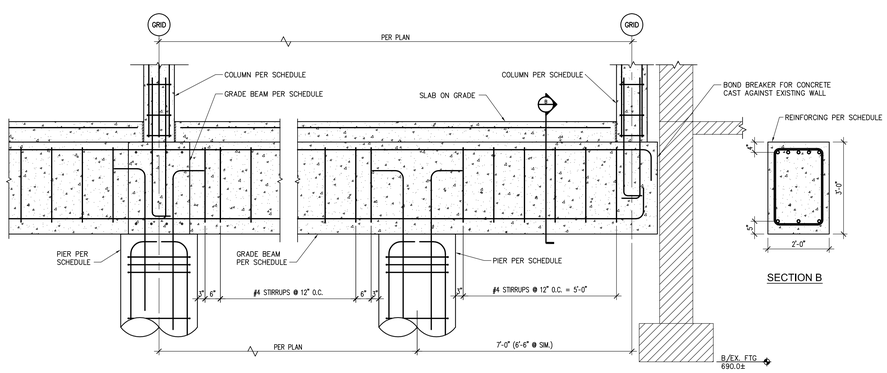

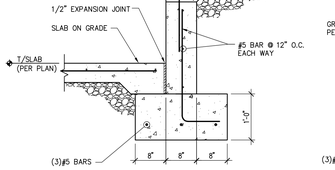

SECTION B

15 GRADE BEAM ELEVATION
1/2"=1'-0"

16 FOOTING DETAIL
3/4" = 1'-0"

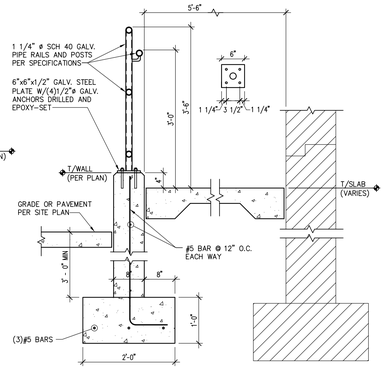

17 RETAINING WALL
3/4" = 1'-0"

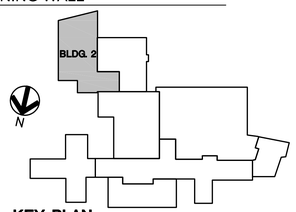

KEY PLAN
NOT TO SCALE

2-1

Revisions	Date

SHIVEHATTERY
ARCHITECTURE + ENGINEERING
2834 Northgate Drive | Iowa City, Iowa 52245
319.354.3040 | fax: 319.354.6921 | shive-hattery.com
Iowa | Illinois | Missouri

Drawing Title: STRUCTURAL DETAILS

Project Title: RENOVATE AND EXPAND SPACE FOR PATIENT SUPPORT AREAS

Date 12-05-2014
CONSTRUCTION DOCUMENTS

Project No. DVA#636-311 S-H#110240-0

Approved: Division Chief

Approved: Service Director

Building Number 2 | Checked MM | Drawn KLH

Location: IOWA CITY VA HEALTH CARE SYSTEM, IOWA CITY, IOWA

DRAWING NO. 2-S5
Dwg. 7 Of 16

Veterans Administration