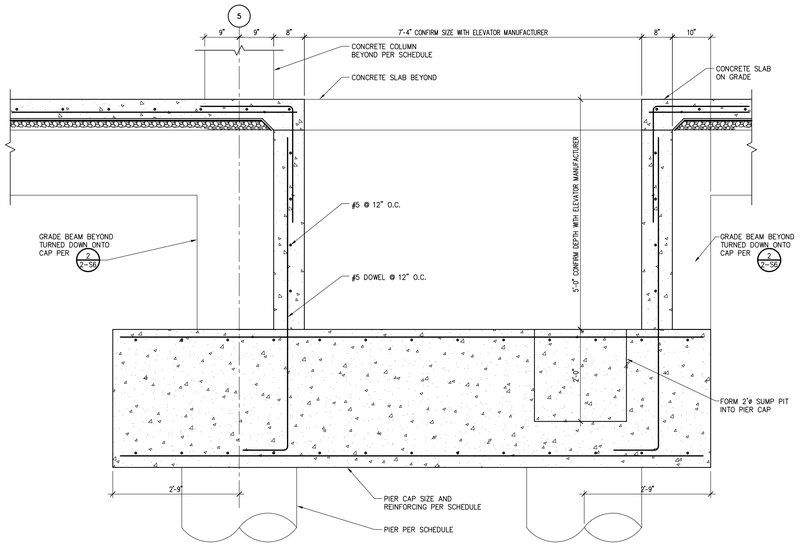

1 ELEVATOR PIT DETAIL
3/4"=1'-0"

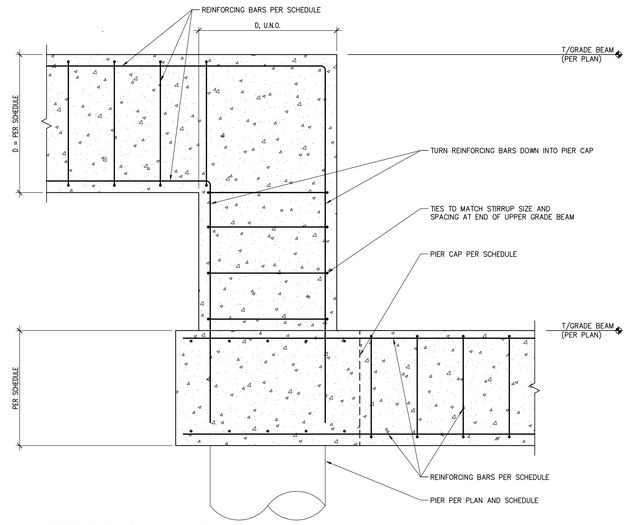

2 STEPPED GRADE BEAM
3/4"=1'-0"

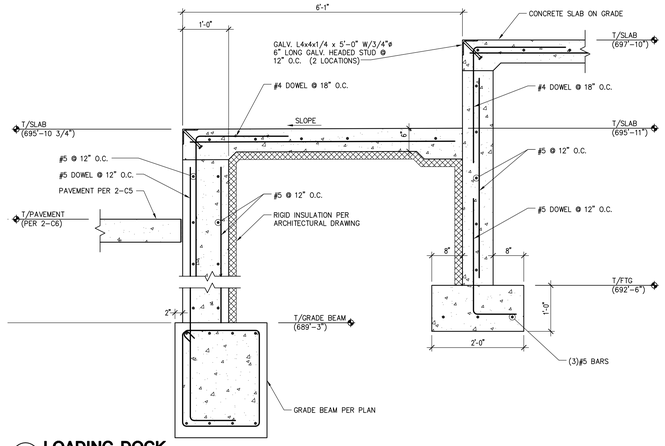

3 LOADING DOCK
3/4"=1'-0"

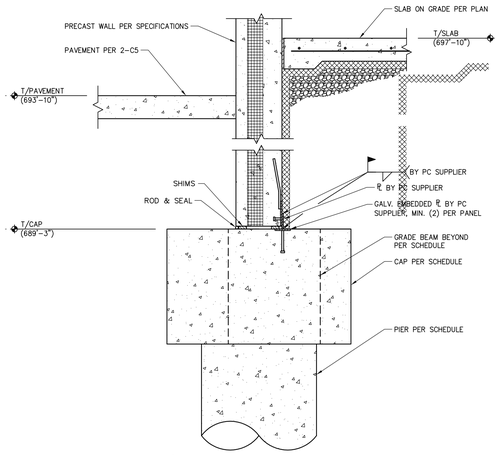

4 PIER AT EXTERIOR WALL
3/4"=1'-0"

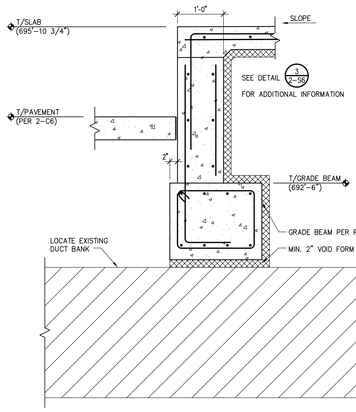

5 GRADE BEAM AT DUCT BANK
3/4"=1'-0"

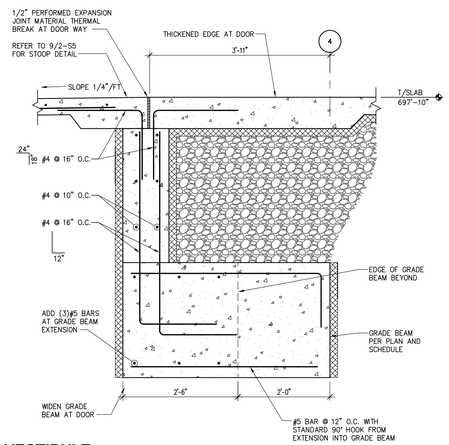

6 VESTIBULE
3/4"=1'-0"

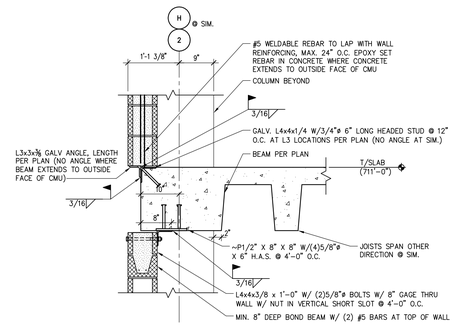

7 DETAIL AT FLOOR
3/4"=1'-0"

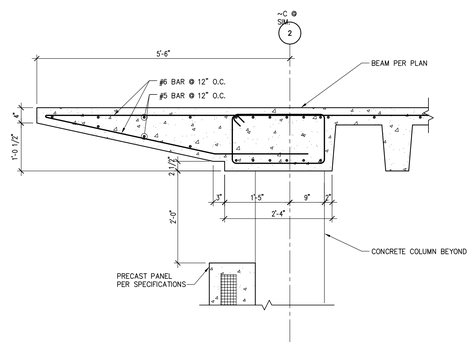

8 DETAIL AT ROOF
3/4"=1'-0"

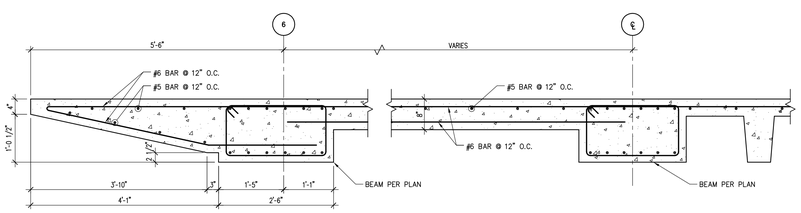

9 DETAIL AT ROOF
3/4"=1'-0"

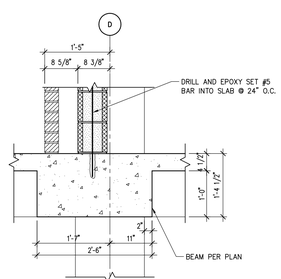

10 DETAIL AT FLOOR/ROOF
3/4"=1'-0"

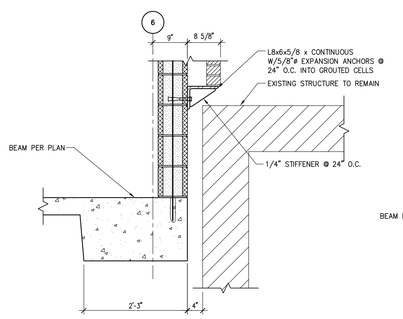

11 DETAIL AT EXISTING ROOF
3/4"=1'-0"

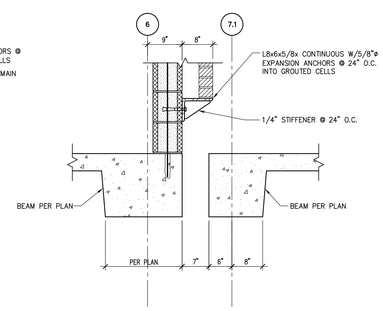

12 DETAIL @ FLOOR/ROOF
3/4"=1'-0"

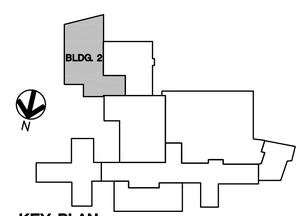

KEY PLAN
NOT TO SCALE

2-1

Revisions	Date

SHIVEHATTERY
ARCHITECTURE + ENGINEERING
2834 Northgate Drive | Iowa City, Iowa 52245
319.354.3040 | fax: 319.354.6921 | shive-hattery.com
Iowa | Illinois | Missouri

Drawing Title: STRUCTURAL DETAILS

Project Title: RENOVATE AND EXPAND SPACE FOR PATIENT SUPPORT AREAS

Date 12-05-2014
CONSTRUCTION DOCUMENTS

Project No. DVA#636-311
S-H#110240-0

Approved: Division Chief

Approved: Service Director

Building Number 2 | Checked MM | Drawn MPD

Location: IOWA CITY VA HEALTH CARE SYSTEM, IOWA CITY, IOWA

DRAWING NO. 2-S6
Dwg. 8 Of 16

Veterans Administration