DO NOT DISTURB EXISTING/RELOCTED OXYGEN PIPING BELOW GRADE. FIELD VERIFY EXACT LOCATION AS REQUIRED TO PERFORM WORK SHOWN ON PLANS. IF ACTUAL LOCATION INTERFERES WITH EXISTING CONSTRUCTION TO BE DEMOLISHED, NOTIFY ENGINEER OF RECORD FOR DIRECTION PRIOR TO COMMENCEMENT OF WORK.

DO NOT DISTURB EXISTING ELECTRICAL DUCT BANK BELOW GRADE. FIELD VERIFY EXACT LOCATION AS REQUIRED TO PERFORM WORK SHOWN ON PLANS. IF ACTUAL LOCATION INTERFERES WITH EXISTING CONSTRUCTION TO BE DEMOLISHED, NOTIFY ENGINEER OF RECORD FOR DIRECTION PRIOR TO COMMENCEMENT OF WORK.

BUILDING 15

BUILDING 38

BUILDING 2

DEMO WALLS AND FOOTINGS

REFEED POWER TO WAREHOUSE PRIOR TO DEMOLITION OF BUILDING 15. REFER TO ELECTRICAL DRAWINGS FOR ADDITIONAL INFORMATION.

DO NOT DISTURB EXISTING UNDERSLAB PIPING UNTIL NEW PIPING IS INSTALLED. REFER TO SHEETS 2-PD0 AND 2-P0 FOR ADDITIONAL INFORMATION

NEW UNDERSLAB PIPING TO BE INSTALLED AROUND NEW PIER LOCATIONS. REFER TO SHEET 2-P0 FOR ADDITIONAL INFORMATION

DEMO COLUMNS AND FOOTINGS

DEMO SLAB ON GRADE

EXISTING STRUCTURE TO REMAIN

DEMO STEEL FRAMING

DEMO LOADING DOCK WALLS AND FOOTINGS

COMPLETE DRAWINGS OF EXISTING BUILDING 2 TO BE DEMOLISHED TO BE USED FOR REFERENCE ONLY ARE AVAILABLE FROM THE OWNER UPON REQUEST. ACTUAL FIELD CONDITIONS MAY VARY FROM THOSE SHOWN ON THE DRAWINGS.

FOUNDATION DEMOLITION PLAN
1/8"=1'-0"

N

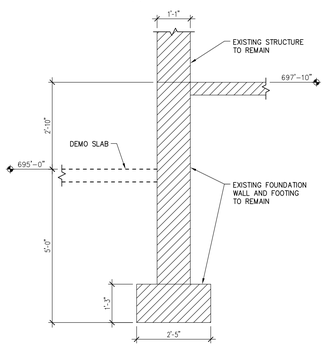

1 WALL SECTION
1/2"=1'-0"

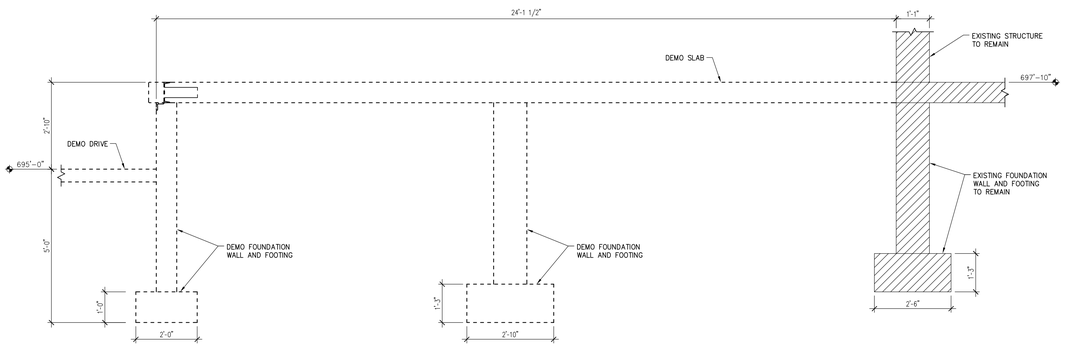

2 WALL SECTION
1/2"=1'-0"

KEY PLAN
NOT TO SCALE

2-1

Revisions	Date

SHIVEHATTERY
ARCHITECTURE + ENGINEERING
2834 Northgate Drive | Iowa City, Iowa 52245
319.354.3040 | fax: 319.354.6921 | shive-hattery.com
Iowa | Illinois | Missouri

Drawing Title: FOUNDATION DEMOLITION PLAN

Project Title: RENOVATE AND EXPAND SPACE FOR PATIENT SUPPORT AREAS

Date 12-05-2014 CONSTRUCTION DOCUMENTS

Project No. DVA#636-311 S-H#110240-0

Approved: Division Chief

Building Number 2 | Checked MM | Drawn KLH

DRAWING NO. 2-SD1

Dwg. 1 Of 16

Approved: Service Director

Location: IOWA CITY VA HEALTH CARE SYSTEM, IOWA CITY, IOWA

Veterans Administration