STRUCTURAL CALCULATIONS

FOR

VANCHCS – SACRAMENTO MEDICAL CENTER

MATHER, CA

October 20, 2014

Client:	Hilliard Architecture
B&B Principal in Charge:	John D.Harvey
B&B Project Engineer:	George A. McCluskey
B&B Job No.:	

TABLE OF CONTENTS

Project Description and Design Criteria *T1*

Structural Anchorage Calculations *SA1*

Structural Calculations *S1*

Appendix A: Reference Materials *A1*

REGISTERED PROFESSIONAL ENGINEER
JOHN D. HARVEY
No. 4660
STRUCTURAL
STATE OF CALIFORNIA

BUEHLER & BUEHLER, STRUCTURAL ENGINEERS, INC.

5 Third St., Suite 1125, San Francisco, CA 94103 • 415-495-1635 • 415-495-1639 (Fax)

Project Description:

The Veterans Affairs Northern California Healthcare System (VANCHS) will be installing a new high efficiency chiller in two existing buildings on their Sacramento VA Medical Center at Mather campus. The buildings in which the upgrades are taking place are buildings 701, 702, and 703. No structural work is being performed in building 703 though. The structural scope is as follows:

1. Anchorage design for one (N) chiller unit
2. Structural modifications of the (E) slab on grade as needed to support the (N) chiller
3. Anchorage designs for nine (N) pumps of which there are three distinct types
4. Structural modifications of the (E) slab on grade and/or roof structure
5. (N) roof and (N) wall penetrations as needed by the mechanical and electrical disciplines
6. Assistance in either marking-up pipe anchorage detail or provision of anchorage details

Existing Building 701 & 702

Building 701 & 702 are a one story masonry building. The exterior walls are made of 12" CMU blocks with a parapet at the roof level. The roof is 2" x 20ga metal deck with 3 ¼" LW concrete topping. The roof is supported by wide flange beams that span to the 12" exterior CMU walls along the perimeter and a single wide flange column in the center of the building. The exterior walls are supported by continuous footings and isolated pad footings. The slab on grade is 8" thick with reinforcement specified per plan.

Design Criteria:

Building Type: Risk Category: IV – Energy Centers for VA Medical Center

Design Codes: 2013 California Building Code (2012 IBC)
ASCE 7-10: Minimum Design Loads for Buildings and Other Structures, including *Supplement 1*
AISC 360-10: Specification for Structural Steel Buildings (14th Edition AISC)
AISC 341-10: Seismic Provisions for Structural Steel Buildings, including *Supplement 1*
ACI 318-11: Building Code Requirements for Structural Concrete
ASCE 05-11, ACI 530-11, TMS 402-11: Building Code Requirements and Specification for Masonry Structures
AF&PA NDS 2012 and SDPWS-08

Wind Criteria: V_{ULT} = 115 mph, Exposure C

GC_{pi} = ±0.18 (Enclosed Structure) or ±0.55 (Partially Enclosed Structure)

Seismic Criteria: Site Class: D $S_S = 0.548$ $S_1 = 0.261$ $S_{DS} = 0.498$ $S_{D1} = 0.327$

Seismic Design Category: D

Material Specifications:

Concrete: (Cement ASTM C-150)		W/C Ratio
Footings, pier caps:	f'_c = 4000 psi	0.52
Slab-on-grade:	f'_c = 3500 psi	0.45
Elevated Slabs & Bms:	f'_c = 5000 psi	0.45
Columns:	f'_c = 5000 psi	0.45
Shear Walls:	f'_c = 4000 psi	0.50

Masonry:

Concrete Masonry:	f'_m = 1500 psi
Clay Masonry:	f'_m = 2500 psi
Grout:	f'_m = 2000 psi
Mortar:	f'_m = 1800 psi

Structural Steel:

WF shapes:	ASTM A992 (50 ksi)
HSS (rectangular):	ASTM A500-B (46 ksi)
HSS (round):	ASTM A500-B (42 ksi)
Pipe:	ASTM A53 (35 ksi)
Channel & Angle:	ASTM A36 (36 ksi)
Plate:	ASTM A36 (36 ksi)
Anchor Rods (frames):	ASTM F1554 (gr. 36)

USGS Design Maps Summary Report

User–Specified Input

Report Title VANCHS - Sacramento VA Medical Center - Chiller Upgrade
Wed June 25, 2014 21:03:47 UTC

Building Code Reference Document ASCE 7-10 Standard
(which utilizes USGS hazard data available in 2008)

Site Coordinates 38.5729°N, 121.2963°W

Site Soil Classification Site Class D – "Stiff Soil"

Risk Category IV (e.g. essential facilities)

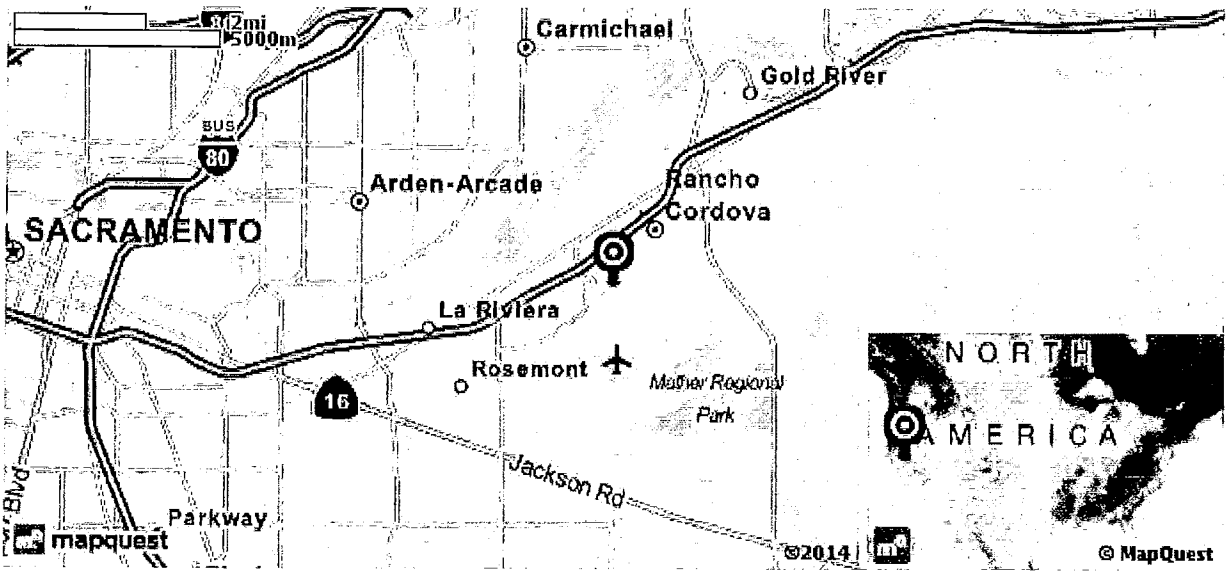

USGS–Provided Output

S_S =	0.548 g	S_{MS} =	0.746 g	S_{DS} =	0.498 g
S_1 =	0.261 g	S_{M1} =	0.490 g	S_{D1} =	0.327 g

For information on how the SS and S1 values above have been calculated from probabilistic (risk-targeted) and deterministic ground motions in the direction of maximum horizontal response, please return to the application and select the "2009 NEHRP" building code reference document.

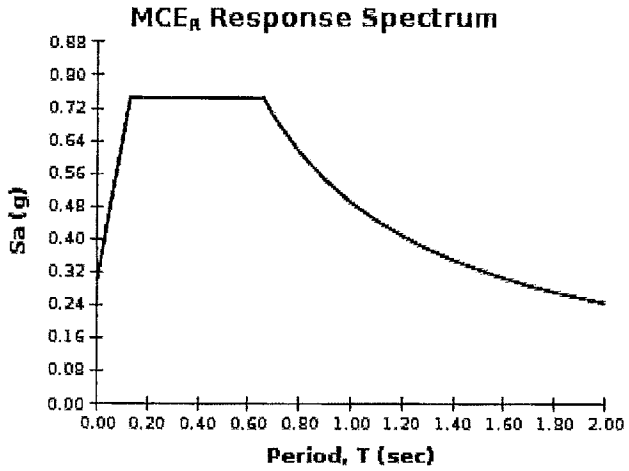

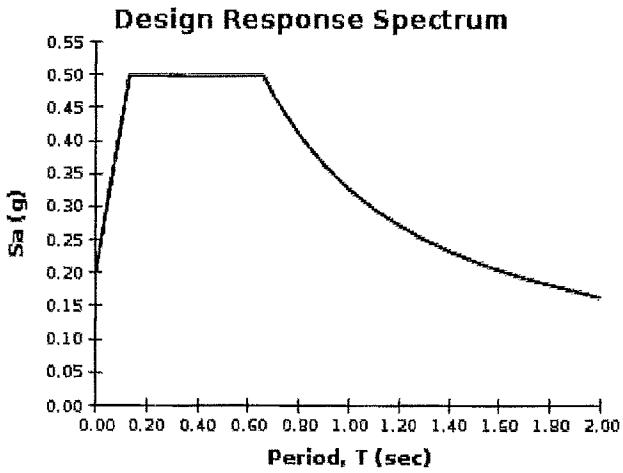

For PGA_M, T_L, C_{RS}, and C_{R1} values, please view the detailed report.

WINDSPEED BY LOCATION

Applied Technology Council

Search Results

Latitude: 38.5729
Longitude: -121.2963

ASCE 7-10 Wind Speeds (3-sec peak gust MPH*):

Risk Category I: 100
Risk Category II: 110
Risk Category III-IV: 115
MRI 10 Year:** 72
MRI 25 Year:** 79
MRI 50 Year:** 85
MRI 100 Year:** 91

ASCE 7-05: 85
ASCE 7-93: 72

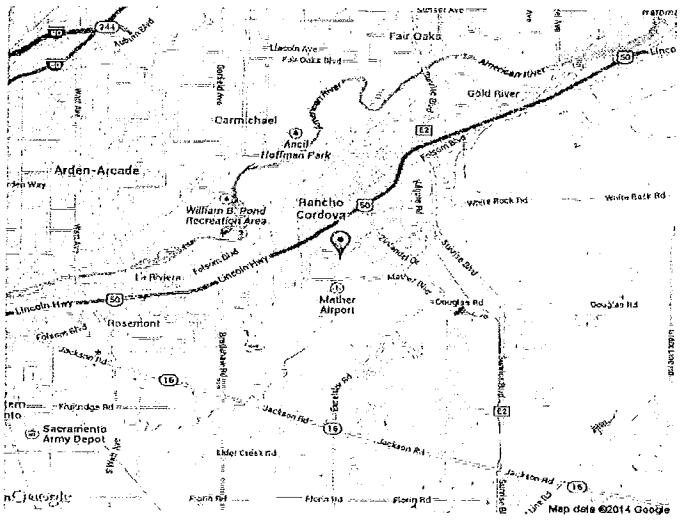

*MPH(Miles per hour)
**MRI Mean Recurrence Interval (years)
Users should consult with local building officials to determine if there are community-specific wind speed requirements that govern.

WIND SPEED WEB SITE DISCLAIMER:
While the information presented on this web site is believed to be correct, ATC assumes no responsibility or liability for its accuracy. The material presented in the wind speed report should not be used or relied upon for any specific application without competent examination and verification of its accuracy, suitability and applicability by engineers or other licensed professionals. ATC does not intend that the use of this information replace the sound judgment of such competent professionals, having experience and knowledge in the field of practice, nor to substitute for the standard of care required of such professionals in interpreting and applying the results of the wind speed report provided by this web site. Users of the information from this web site assume all liability arising from such use. Use of the output of this web site does not imply approval by the governing building code bodies responsible for building code approval and interpretation for the building site(s) described by latitude/longitude location in the wind speed report.

Sponsored by the ATC Endowment Fund Applied Technology Council 201 Redwood Shores Parkway, Suite 240 Redwood City, California 94065 (650) 595-1542

BUEHLER & BUEHLER ASSOCIATES
STRUCTURAL ENGINEERS. INC.
600 Q Street, Suite 200
SACRAMENTO, CALIFORNIA 95814

JOB	VA Mather - Chiller Upgrade		
JOB NO.		DATE	10/15/2014
CLIENT	Hilliard BY SMS	SHEET NO.	SA0

Equipment Schedule

Item Number	Designation	Equipment Description	Weight (lbs.) *	Mount **	Detail	Calculation Sheets	Equipment Cut Sheets
1	WCCH-1 & WCCH-2	(N) Centrifugal Water Chiller	23,275 lbs	F	1/S-501	SA1	A1
2	SCHP-1 thru SCHP-3	(N) Secondary Chilled Water Pumps	1170	F	2/S-501	SA2	A2
3	PCHP-1 thru PCHP-3	(N) Primary Chilled Water Pumps	1010	F	2/S-501	SA3	A3
4	CTP-1 thru CTP-3	(N) Cooling Tower Pumps	1170	R	3/S-501	SA4	A4
5	F-1	(N) Filter Unit	3000	R	4/S-501	SA5	A5
6							
7							
8							
9							
10							

* Per manufacturer's specs, attached.
** F = floor, W = wall, C = ceiling

BUEHLER & BUEHLER ASSOCIATES
STRUCTURAL ENGINEERS, INC.
600 Q Street, Suite 200
SACRAMENTO, CALIFORNIA 95814

JOB	VA Mather - Chiller Upgrade		
JOB NO		DATE	6/26/2014
CLIENT	NEWed BY BUS	SHEET NO	SA1

Mechanical Equipment Anchorage Calc - BASE MOUNTED

Unit Identification: (N) Chiller (WCCH)

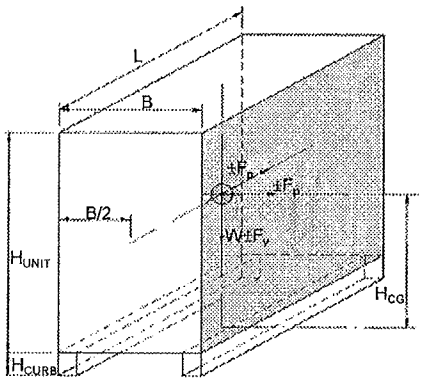

W_p =	23275 lbs	unit weight
B =	75.00 in	width
L =	145.44 in	length
H_{UNIT} =	104.80 in	unit height
H_{CG} =	41.00 in	center of gravity height
H_{CURB} =	0.00 in	curb height

Seismic Load (ASCE 7-10, Ch. 13)

a_p and R_p obtained from ASCE 7-10, Tables 13.5-1 and 13.6-1

a_p =	1.00	R_p =	2.50	I_p =	1.50	S_{DS} =	0.498
h =	18.00 ft	z =	0.00 ft			Apply $F_v = 0.2S_{DS}W_p$?	Yes
				Connection:	Steel	Ωo =	2.5

$F_p = (0.4[(a_p)(S_{DS})(I_p)(1+2(z/h)]/R_p) \times W_p$ = 0.120 Wp

$F_v = 0.2(S_{DS})W_p$ = 0.100 Wp

$F_{p\text{-}MIN} = 0.3(S_{DS})(I_p) \times W_p$ = 0.224 Wp

$F_{p\text{-}MAX} = 1.6(S_{DS})(I_p) \times (W_p)$ = 1.195 Wp

STRENGTH		SERVICE	
$F_p = V_h$ =	**5216 lbs**	$0.7F_p = V_h$ =	**3651 lbs**
$F_v = V_v$ =	**2318 lbs**	$0.7F_v = V_v$ =	**1623 lbs**

Use: **STRENGTH**

Unit Anchorage:

Load Combination: 0.9D ± 1.0E

Fp in Direction 1

$M_{OT} = 1.0V_h H_{CG} + 1.0V_V (B/2)$ = 25065 lb-ft

$M_R = 0.9\ W_p(B/2)$ = 65461 lb-ft ***No Uplift***

$T = (M_{OT} - M_R)/B$ = **0 lbs**

$C = M_{OT}/B + W_p/2$ = **14484 lbs** (Max Compression due to overturning effects of unit)

Fp in Direction 2

$M_{OT} = 1.0V_h H_{CG} + 1.0V_V (B/2)$ = 31869 lb-ft

$M_R = 0.9\ W_p(B/2)$ = 126942 lb-ft ***No Uplift***

$T = (M_{OT} - M_R)/B$ = **0 lbs**

$C = M_{OT}/B + W_p/2$ = **13103 lbs** (Max Compression due to overturning effects of unit)

100% Direction 1 + 30% Direction 2	**TENSION =**	**0 lbs**	**SHEAR =**	**16952 lbs**
100% Direction 2 + 30% Direction 1	**TENSION =**	**0 lbs**	**SHEAR =**	**16952 lbs**

Anchorage **Anchor capacity per Simpson Calcs**

ϕ = 1 ϕ = 0.7

Anchor capacity: ϕN_n = 6438 lbs ϕV_n = 9322 lbs

Failure Mechanism: Pullout Strength Steel Strength

There are the following effective anchors per side: n_{UPLIFT} = **4**

n_{SHEAR} = **8**

100% Direction 2 + 30% Direction 1 Controls

$N_{ua} = T/n_{UPLIFT}$ = **0 lbs** per anchor $N_{ua}/\phi N_n$ = 0.00

$V_{ua} = Vh/Nshear$ = **2119 lbs** per anchor $V_{ua}/\phi V_n$ = 0.23

Unity check = $(N_{ua}/\phi N_n) + (V_{ua}/\phi V_n)$ = 0.33 < 1.0, OK

Use 1" dia ASTM F1554 ATR with SET-XP Epoxy System with 8" min embed (8 Total Anchors)

SA-1A

SIMPSON Strong-Tie®

Anchor Designer™ Software
Version 2.0.5154.10

Company:		Date:	6/26/2014
Engineer:		Page:	1/5
Project:			
Address:			
Phone:			
E-mail:			

1.Project information

Customer company:
Customer contact name:
Customer e-mail:
Comment:

Project description:
Location:
Fastening description:

2. Input Data & Anchor Parameters

General
Design method:ACI 318-11
Units: Imperial units

Anchor Information:
Anchor type: Bonded anchor
Material: F1554 Grade 36
Diameter (inch): 1.000
Effective Embedment depth, h_{ef} (inch): 8.000
Code report: ICC-ES ESR-2508
Anchor category: -
Anchor ductility: Yes
h_{min} (inch): 13.00
c_{ac} (inch): 13.22
C_{min} (inch): 1.75
S_{min} (inch): 3.00

Base Material
Concrete: Normal-weight
Concrete thickness, h (inch): 16.00
State: Cracked
Compressive strength, f'_c (psi): 3000
$\Psi_{c,V}$: 1.0
Reinforcement condition: B tension, B shear
Supplemental reinforcement: Not applicable
Do not evaluate concrete breakout in tension: No
Do not evaluate concrete breakout in shear: No
Hole condition: Dry concrete
Inspection: Periodic
Temperature range: 1
Ignore 6do requirement: Not applicable
Build-up grout pad: No

Base Plate

Load and Geometry
Load factor source: ACI 318 Section 9.2
Load combination: not set
Seismic design: Yes
Anchors subjected to sustained tension: No
Ductility section for tension: D.3.3.4.2 not applicable
Ductility section for shear: D.3.3.5.2 not applicable
Ω_0 factor: not set
Apply entire shear load at front row: No
Anchors only resisting wind and/or seismic loads: Yes

<Figure 1>

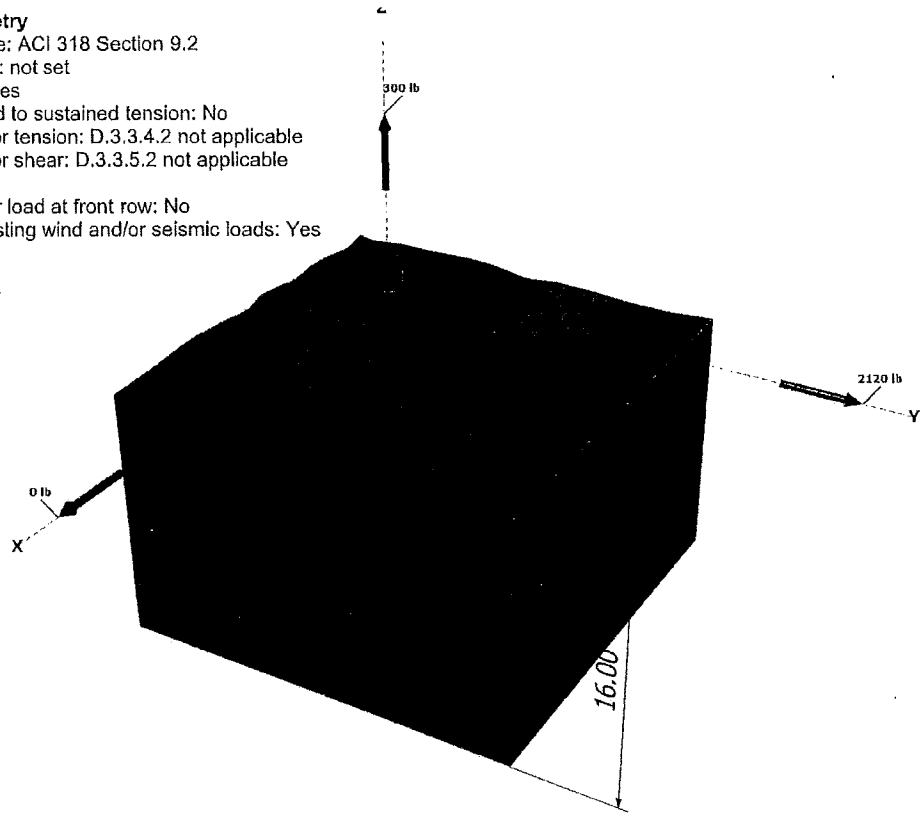

SA-1B

Company:		Date:	6/26/2014
Engineer:		Page:	2/5
Project:			
Address:			
Phone:			
E-mail:			

<Figure 2>

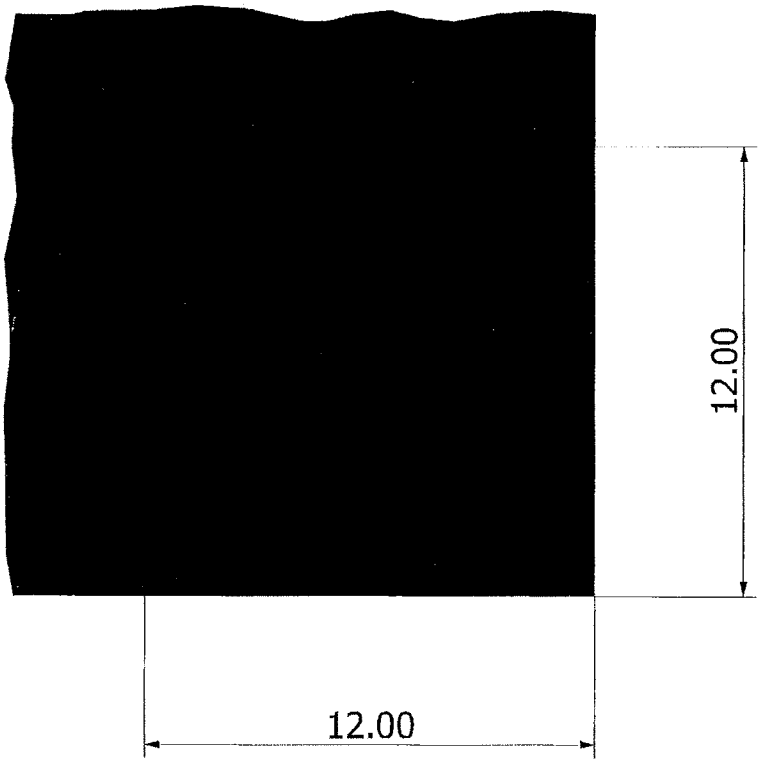

Recommended Anchor
Anchor Name: SET-XP® - SET-XP w/ 1"Ø F1554 Gr. 36
Code Report Listing: ICC-ES ESR-2508

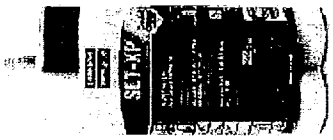

SA-1C

3. Resulting Anchor Forces

Anchor	Tension load, N_{ua} (lb)	Shear load x, V_{uax} (lb)	Shear load y, V_{uay} (lb)	Shear load combined, $\sqrt{(V_{uax})^2+(V_{uay})^2}$ (lb)
1	300.0	0.0	2120.0	2120.0
Sum	300.0	0.0	2120.0	2120.0

Maximum concrete compression strain (‰): 0.00
Maximum concrete compression stress (psi): 0
Resultant tension force (lb): 300
Resultant compression force (lb): 0
Eccentricity of resultant tension forces in x-axis, e'_{Nx} (inch): 0.00
Eccentricity of resultant tension forces in y-axis, e'_{Ny} (inch): 0.00
Eccentricity of resultant shear forces in x-axis, e'_{Vx} (inch): 0.00
Eccentricity of resultant shear forces in y-axis, e'_{Vy} (inch): 0.00

4. Steel Strength of Anchor in Tension(Sec. D.5.1)

N_{sa} (lb)	ϕ	ϕN_{sa} (lb)
35150	0.75	26363

5. Concrete Breakout Strength of Anchor in Tension (Sec. D.5.2)

$N_b = k_c \lambda_a \sqrt{f'_c} h_{ef}^{1.5}$ (Eq. D-6)

k_c	λ_a	f'_c (psi)	h_{ef} (in)	N_b (lb)
17.0	1.00	2500	8.000	19233

$0.75\phi N_{cb} = 0.75\phi\,(A_{Nc} / A_{Nco})\,\Psi_{ed,N}\,\Psi_{c,N}\,\Psi_{cp,N} N_b$ (Sec. D.4.1 & Eq. D-3)

A_{Nc} (in^2)	A_{Nco} (in^2	$\Psi_{ed,N}$	$\Psi_{c,N}$	$\Psi_{cp,N}$	N_b (lb)	ϕ	$0.75\phi N_{cb}$ (lb)
576.00	576.00	1.000	1.00	1.000	19233	0.65	9376

6. Adhesive Strength of Anchor in Tension (Sec. 5.5)

$\tau_{k,cr} = \tau_{k,cr} f_{short\text{-}term} K_{sat} \alpha_{N,seis}$

$\tau_{k,cr}$ (psi)	$f_{short\text{-}term}$	K_{sat}	$\alpha_{N,seis}$	$\tau_{k,cr}$ (psi)
675	1.00	1.00	0.92	621

$N_{ba} = \lambda_a \tau_{cr} \pi d_a h_{ef}$ (Eq. D-22)

λ_a	τ_{cr} (psi)	d_a (in)	h_{ef} (in)	N_{ba} (lb)
1.00	621	1.00	8.000	15607

$0.75\phi N_a = 0.75\phi\,(A_{Na} / A_{Na0})\,\Psi_{ed,Na}\,\Psi_{cp,Na} N_{ba}$ (Sec. D.4.1 & Eq. D-18)

A_{Na} (in^2)	A_{Na0} (in^2)	$\Psi_{ed,Na}$	$\Psi_{p,Na}$	N_{a0} (lb)	ϕ	$0.75\phi N_a$ (lb)
565.45	565.45	1.000	1.000	15607	0.55	6438

SIMPSON Strong-Tie®

Anchor Designer™ Software
Version 2.0.5154.10

Company:		Date:	6/26/2014
Engineer:		Page:	4/5
Project:			
Address:			
Phone:			
E-mail:			

8. Steel Strength of Anchor in Shear (Sec. D.6.1)

V_{sa} (lb)	ϕ_{grout}	ϕ	$\alpha_{V,seis}$	$\phi_{grout}\alpha_{V,seis}\phi V_{sa}$ (lb)
21090	1.0	0.65	0.68	9322

9. Concrete Breakout Strength of Anchor in Shear (Sec. D.6.2)

Shear perpendicular to edge in y-direction:

$V_{by} = \min|7(l_e / d_a)^{0.2}\sqrt{d_a}\lambda_a\sqrt{f'_c}c_{a1}^{1.5};\ 9\lambda_a\sqrt{f'_c}c_{a1}^{1.5}|$ (Eq. D-33 & Eq. D-34)

l_e (in)	d_a (in)	λ_a	f'_c (psi)	c_{a1} (in)	V_{by} (lb)
8.00	1.00	1.00	3000	12.00	20492

$\phi V_{cby} = \phi\ (A_{Vc} / A_{Vco})\Psi_{ed,V}\Psi_{c,V}\Psi_{h,V}V_{by}$ (Sec. D.4.1 & Eq. D-30)

A_{Vc} (in²)	A_{Vco} (in²)	$\Psi_{ed,V}$	$\Psi_{c,V}$	$\Psi_{h,V}$	V_{by} (lb)	ϕ	ϕV_{cby} (lb)
480.00	648.00	0.900	1.000	1.061	20492	0.70	10143

Shear parallel to edge in y-direction:

$V_{bx} = \min|7(l_e / d_a)^{0.2}\sqrt{d_a}\lambda_a\sqrt{f'_c}c_{a1}^{1.5};\ 9\lambda_a\sqrt{f'_c}c_{a1}^{1.5}|$ (Eq. D-33 & Eq. D-34)

l_e (in)	d_a (in)	λ_a	f'_c (psi)	c_{a1} (in)	V_{bx} (lb)
8.00	1.00	1.00	3000	12.00	20492

$\phi V_{cby} = \phi\ (2)(A_{Vc} / A_{Vco})\Psi_{ed,V}\Psi_{c,V}\Psi_{h,V}V_{bx}$ (Sec. D.4.1 & Eq. D-30)

A_{Vc} (in²)	A_{Vco} (in²)	$\Psi_{ed,V}$	$\Psi_{c,V}$	$\Psi_{h,V}$	V_{bx} (lb)	ϕ	ϕV_{cby} (lb)
480.00	648.00	1.000	1.000	1.061	20492	0.70	22540

10. Concrete Pryout Strength of Anchor in Shear (Sec. D.6.3)

$\phi V_{cp} = \phi \min|k_{cp}N_a;\ k_{cp}N_{cb}| = \phi \min|k_{cp}(A_{Na} / A_{Na0})\Psi_{ed,Na}\Psi_{cp,Na}N_{ba};\ k_{cp}(A_{Nc} / A_{Nco})\Psi_{ed,N}\Psi_{c,N}\Psi_{cp,N}N_b|$ (Eq. D-40)

k_{cp}	A_{Na} (in²)	A_{Na0} (in²)	$\Psi_{ed,Na}$	$\Psi_{cp,Na}$	N_{ba} (lb)	N_a (lb)
2.0	565.45	565.45	1.000	1.000	15607	15607

A_{Nc} (in²)	A_{Nco} (in²)	$\Psi_{ed,N}$	$\Psi_{c,N}$	$\Psi_{cp,N}$	N_b (lb)	N_{cb} (lb)	ϕ	ϕV_{cp} (lb)
576.00	576.00	1.000	1.000	1.000	19233	19233	0.70	21850

11. Interaction of Tensile and Shear Forces (Sec. D.7)

Tension	Factored Load, N_{ua} (lb)	Design Strength, ϕN_n (lb)	Ratio	Status
Steel	300	26363	0.01	Pass
Concrete breakout	300	9376	0.03	Pass
Adhesive	**300**	**6438**	**0.05**	**Pass (Governs)**

Shear	Factored Load, V_{ua} (lb)	Design Strength, ϕV_n (lb)	Ratio	Status
Steel	**2120**	**9322**	**0.23**	**Pass (Governs)**
T Concrete breakout y+	2120	10143	0.21	Pass
|| Concrete breakout x+	2120	22540	0.09	Pass
Pryout	2120	21850	0.10	Pass

Interaction check	$N_{ua}/\phi N_n$	$V_{ua}/\phi V_n$	Combined Ratio	Permissible	Status
Sec. D.7.2	0.00	0.23	22.7 %	1.0	Pass

SET-XP w/ 1"Ø F1554 Gr. 36 with hef = 8.000 inch meets the selected design criteria.

BUEHLER & BUEHLER ASSOCIATES
STRUCTURAL ENGINEERS, INC.
600 Q Street, Suite 200
SACRAMENTO, CALIFORNIA 95814

JOB	VA Mather - Chiller Upgrade		
JOB NO.		DATE	6/26/2014
CLIENT	Heard BY SMS	SHEET NO.	SA2

Mechanical Equipment Anchorage Calc - BASE MOUNTED

Unit Identification: **(N) Secondary Chiller Pump** (SCHP)

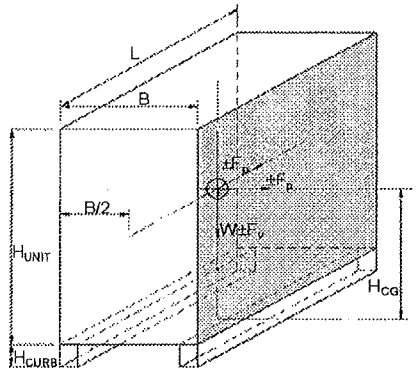

W_p =	1170 lbs	unit weight
B =	21.50 in	width
L =	44.00 in	length
H_{UNIT} =	27.50 in	unit height
H_{CG} =	18.38 in	center of gravity height
H_{CURB} =	0.00 in	curb height

Seismic Load (ASCE 7-10, Ch. 13)

a_p and R_p obtained from ASCE 7-10, Tables 13.5-1 and 13.6-1

a_p =	1.00	R_p =	2.50	I_p =	1.50	S_{DS} =	0.498
h =	18.00 ft	z =	0.00 ft			Apply $F_v = 0.2S_{DS}W_p$?	Yes
				Connection:	Steel	Ωo =	2.5

$F_p = (0.4[(a_p)(S_{DS})(I_p)(1+2(z/h)]/R_p) \times W_p$ = 0.120 Wp

$F_{p\text{-}MIN} = 0.3(S_{DS})(I_p) \times W_p$ = 0.224 Wp

$F_{p\text{-}MAX} = 1.6(S_{DS})(I_p) \times (W_p)$ = 1.195 Wp

$F_v = 0.2(S_{DS})W_p$ = 0.100 Wp

STRENGTH	
$F_p = V_h$ =	**262 lbs**
$F_v = V_v$ =	**117 lbs**

SERVICE	
$0.7F_p = V_h$ =	**184 lbs**
$0.7F_v = V_v$ =	**82 lbs**

Use: **STRENGTH**

Unit Anchorage:

Load Combination: 0.9D ± 1.0E

Fp in Direction 1

$M_{OT} = 1.0V_h H_{CG} + 1.0V_V (B/2)$ = 506 lb-ft

$M_R = 0.9\ W_p(B/2)$ = 943 lb-ft ***No Uplift***

$T = (M_{OT} - M_R)/B$ = **0 lbs**

$C = M_{OT}/B + W_p/2$ = **809 lbs** (Max Compression due to overturning effects of unit)

Fp in Direction 2

$M_{OT} = 1.0V_h H_{CG} + 1.0V_V (B/2)$ = 615 lb-ft

$M_R = 0.9\ W_p(B/2)$ = 1931 lb-ft ***No Uplift***

$T = (M_{OT} - M_R)/B$ = **0 lbs**

$C = M_{OT}/B + W_p/2$ = **694 lbs** (Max Compression due to overturning effects of unit)

100% Direction 1 + 30% Direction 2	**TENSION =**	**0 lbs**	**SHEAR =**	**852 lbs**
100% Direction 2 + 30% Direction 1	**TENSION =**	**0 lbs**	**SHEAR =**	**852 lbs**

Anchorage **Anchor capacity per Simpson Calcs**

	ϕ =	1	ϕ =	0.7
Anchor capacity:	ϕN_n =	3479 lbs	ϕV_n =	9012 lbs
Failure Mechanism:		Pullout Strength		Steel Strength

There are the following effective anchors per side: n_{UPLIFT} = **3**

n_{SHEAR} = **6**

100% Direction 2 + 30% Direction 1 Controls

$N_{ua} = T/n_{UPLIFT}$ = **0 lbs** per anchor $N_{ua}/\phi N_n$ = 0.00

V_{ua} = Vh/Nshear = **142 lbs** per anchor $V_{ua}/\phi V_n$ = 0.02

Unity check = $(N_{ua}/\phi N_n) + (V_{ua}/\phi V_n)$ = 0.04 < 1.0, OK

Use 3/4" dia Simpson SB2 with 4.5" embed
Use 1 1/2" x 3/16" PL washers with welds on 2 sides

BUEHLER & BUEHLER ASSOCIATES
STRUCTURAL ENGINEERS. INC.
600 Q Street, Suite 200
SACRAMENTO, CALIFORNIA 95814

JOB	VA Mather - Chiller Upgrade		
JOB NO		DATE	6/26/2014
CLIENT	Hillard BY SMS	SHEET NO.	SA3

Mechanical Equipment Anchorage Calc - BASE MOUNTED

Unit Identification: **(N) Primary Chiller Pump** (PCHP)

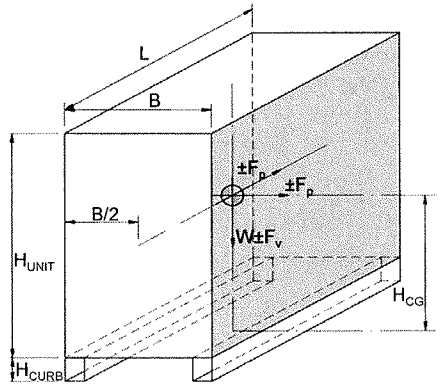

W_p =	1010 lbs	unit weight
B =	21.50 in	width
L =	44.00 in	length
H_{UNIT} =	27.50 in	unit height
H_{CG} =	18.38 in	center of gravity height
H_{CURB} =	0.00 in	curb height

Seismic Load (ASCE 7-10, Ch. 13)

a_p and R_p obtained from ASCE 7-10, Tables 13.5-1 and 13.6-1

a_p =	1.00	R_p =	2.50	I_p =	1.50	S_{DS} =	0.498
h =	18.00 ft	z =	0.00 ft			Apply $F_v = 0.2S_{DS}W_p$?	Yes
				Connection:	Steel	Ωo =	2.5

$F_p = (0.4[(a_p)(S_{DS})(I_p)(1+2(z/h)]/R_p) \times W_p$ = 0.120 Wp

$F_v = 0.2(S_{DS})W_p$ = 0.100 Wp

$F_{p\text{-}MIN} = 0.3(S_{DS})(I_p) \times W_p$ = 0.224 Wp

$F_{p\text{-}MAX} = 1.6(S_{DS})(I_p) \times (W_p)$ = 1.195 Wp

STRENGTH	
$F_p = V_h$ =	**226 lbs**
$F_v = V_v$ =	**101 lbs**

SERVICE	
$0.7F_p = V_h$=	**158 lbs**
$0.7F_v = V_v$ =	**70 lbs**

Use: **STRENGTH**

Unit Anchorage:

Load Combination: 0.9D ± 1.0E

Fp in Direction 1

$M_{OT} = 1.0V_h H_{CG} + 1.0V_V (B/2)$ = 437 lb-ft

$M_R = 0.9\ W_p(B/2)$ = 814 lb-ft ***No Uplift***

$T = (M_{OT} - M_R)/B$ = **0 lbs**

$C = M_{OT}/B + W_p/2$ = **698 lbs** (Max Compression due to overturning effects of unit)

Fp in Direction 2

$M_{OT} = 1.0V_h H_{CG} + 1.0V_V (B/2)$ = 531 lb-ft

$M_R = 0.9\ W_p(B/2)$ = 1667 lb-ft ***No Uplift***

$T = (M_{OT} - M_R)/B$ = **0 lbs**

$C = M_{OT}/B + W_p/2$ = **599 lbs** (Max Compression due to overturning effects of unit)

100% Direction 1 + 30% Direction 2	**TENSION =**	**0 lbs**	**SHEAR =**	**736 lbs**
100% Direction 2 + 30% Direction 1	**TENSION =**	**0 lbs**	**SHEAR =**	**736 lbs**

Anchorage **Anchor capacity per Simpson Calcs**

	ϕ =	1	ϕ =	0.7
Anchor capacity:	ϕN_n =	3479 lbs	ϕV_n =	9012 lbs
Failure Mechanism:		Pullout Strength		Steel Strength

There are the following effective anchors per side: n_{UPLIFT} = **3**

n_{SHEAR} = **6**

100% Direction 2 + 30% Direction 1 Controls

$N_{ua} = T/n_{UPLIFT}$ =	**0 lbs**	per anchor	$N_{ua}/\phi N_n$ = 0.00
V_{ua} = Vh/Nshear =	**123 lbs**	per anchor	$V_{ua}/\phi V_n$ = 0.01

Unity check = $(N_{ua}/\phi N_n) + (V_{ua}/\phi V_n)$ = 0.04 < 1.0, OK

Use 3/4" dia Simpson SB2 with 4.5" embed
Use 1 1/2" x 3/16" PL washers with welds on 2 sides

SA-3A

SIMPSON Strong-Tie®

Anchor Designer™ Software
Version 2.0.5154.11

Company:		Date:	6/26/2014
Engineer:		Page:	1/5
Project:			
Address:			
Phone:			
E-mail:			

1.Project Information

Customer company:
Customer contact name:
Customer e-mail:
Comment:

Project description:
Location:
Fastening description:

2. Input Data & Anchor Parameters

General
Design method:ACI 318-11
Units: Imperial units

Anchor Information:
Anchor type: Torque controlled expansion anchor
Material: Carbon Steel
Diameter (inch): 1.000
Nominal Embedment depth (inch): 5.250
Effective Embedment depth, h_{ef} (inch): 4.500
Code report: ICC-ES ESR-3037
Anchor category: 2
Anchor ductility: No
h_{min} (inch): 9.00
c_{ac} (inch): 18.00
C_{min} (inch): 8.00
S_{min} (inch): 8.00

Base Material
Concrete: Normal-weight
Concrete thickness, h (inch): 16.00
State: Cracked
Compressive strength, f'_c (psi): 3000
$\Psi_{c,V}$: 1.0
Reinforcement condition: B tension, B shear
Supplemental reinforcement: Not applicable
Do not evaluate concrete breakout in tension: No
Do not evaluate concrete breakout in shear: No
Ignore 6do requirement: Not applicable
Build-up grout pad: No

Base Plate

Load and Geometry
Load factor source: ACI 318 Section 9.2
Load combination: not set
Seismic design: Yes
Anchors subjected to sustained tension: Not applicable
Ductility section for tension: D.3.3.4.2 not applicable
Ductility section for shear: D.3.3.5.2 not applicable
Ω_0 factor: not set
Apply entire shear load at front row: No
Anchors only resisting wind and/or seismic loads: Yes

<Figure 1>

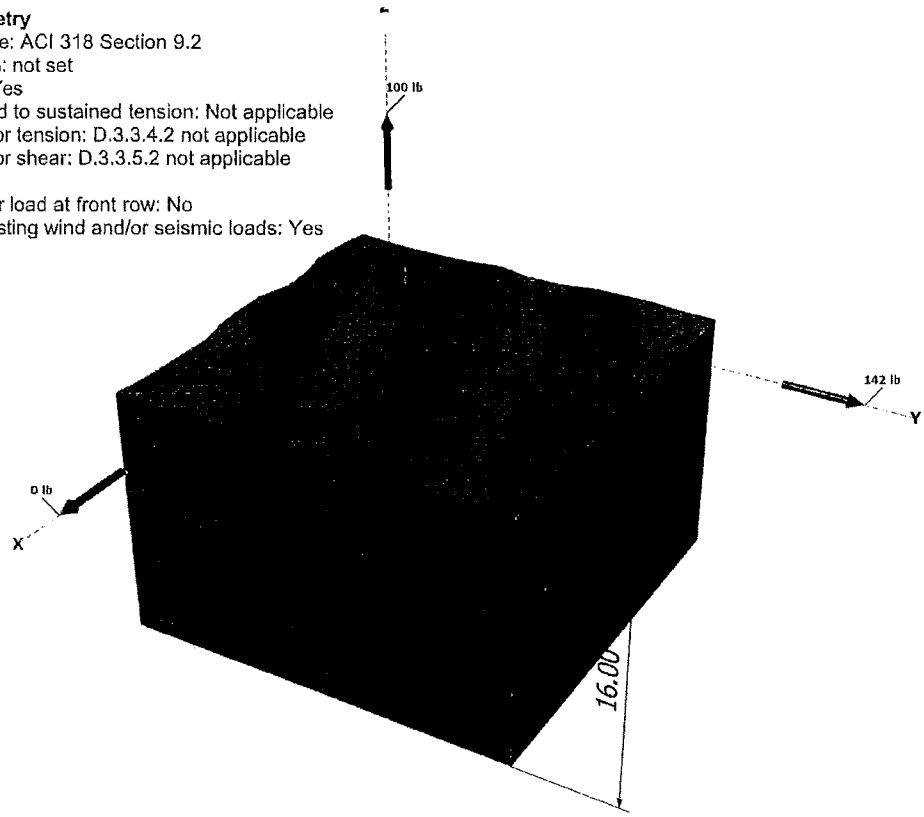

SA-3B

SIMPSON Strong-Tie®

Anchor Designer™ Software
Version 2.0.5154.11

Company:		Date:	6/26/2014
Engineer:		Page:	2/5
Project:			
Address:			
Phone:			
E-mail:			

<Figure 2>

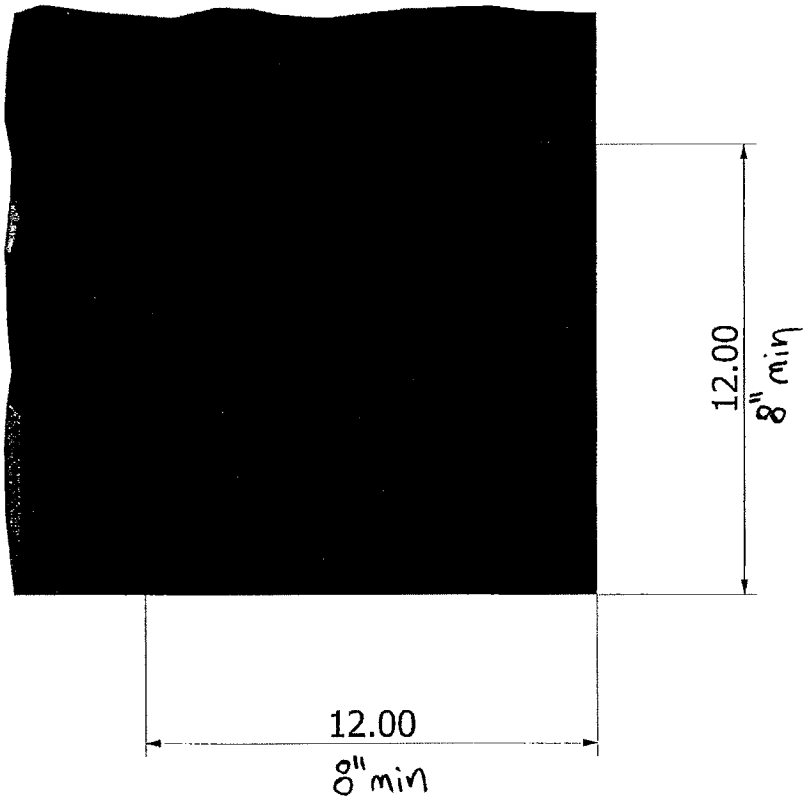

Recommended Anchor
Anchor Name: Strong-Bolt® 2 - 1"Ø CS Strong-Bolt 2, hnom:5.25" (133mm)
Code Report Listing: ICC-ES ESR-3037

SA-3C

3. Resulting Anchor Forces

Anchor	Tension load, N_{ua} (lb)	Shear load x, V_{uax} (lb)	Shear load y, V_{uay} (lb)	Shear load combined, $\sqrt{(V_{uax})^2+(V_{uay})^2}$ (lb)
1	100.0	0.0	142.0	142.0
Sum	100.0	0.0	142.0	142.0

Maximum concrete compression strain (‰): 0.00
Maximum concrete compression stress (psi): 0
Resultant tension force (lb): 100
Resultant compression force (lb): 0
Eccentricity of resultant tension forces in x-axis, e'_{Nx} (inch): 0.00
Eccentricity of resultant tension forces in y-axis, e'_{Ny} (inch): 0.00
Eccentricity of resultant shear forces in x-axis, e'_{Vx} (inch): 0.00
Eccentricity of resultant shear forces in y-axis, e'_{Vy} (inch): 0.00

4. Steel Strength of Anchor in Tension(Sec. D.5.1)

N_{sa} (lb)	ϕ	ϕN_{sa} (lb)
36815	0.65	23930

5. Concrete Breakout Strength of Anchor in Tension (Sec. D.5.2)

$N_b = k_c \lambda_a \sqrt{f'_c} h_{ef}^{1.5}$ (Eq. D-6)

k_c	λ_a	f'_c (psi)	h_{ef} (in)	N_b (lb)
17.0	1.00	3000	4.500	8888

$0.75\phi N_{cb} = 0.75\phi\,(A_{Nc}/A_{Nco})\,\Psi_{ed,N}\Psi_{c,N}\Psi_{cp,N}N_b$ (Sec. D.4.1 & Eq. D-3)

A_{Nc} (in^2)	A_{Nco} (in^2	$\Psi_{ed,N}$	$\Psi_{c,N}$	$\Psi_{cp,N}$	N_b (lb)	ϕ	$0.75\phi N_{cb}$ (lb)
182.25	182.25	1.000	1.00	1.000	8888	0.55	3667

6. Pullout Strength of Anchor in Tension (Sec. D.5.3)

$0.75\phi N_{pn} = 0.75\phi\Psi_{c,P}\lambda_a N_p(f'_c/2{,}500)^n$ (Sec. D.4.1, Eq. D-13 & Code Report)

$\Psi_{c,P}$	λ_a	N_p (lb)	f'_c (psi)	n	ϕ	$0.75\phi N_{pn}$ (lb)
1.0	1.00	7700	3000	0.50	0.55	3479

SA-3D

SIMPSON Strong-Tie®

Anchor Designer™ Software
Version 2.0.5154.11

Company:		Date:	6/26/2014
Engineer:		Page:	4/5
Project:			
Address:			
Phone:			
E-mail:			

8. Steel Strength of Anchor in Shear (Sec. D.6.1)

V_{sa} (lb)	ϕ_{grout}	ϕ	$\phi_{grout}\phi V_{sa}$ (lb)
15020	1.0	0.60	9012

9. Concrete Breakout Strength of Anchor in Shear (Sec. D.6.2)

Shear perpendicular to edge in y-direction:

$V_{by} = \min|7(l_e / d_a)^{0.2}\sqrt{d_a}\lambda_a\sqrt{f'_c}c_{a1}^{1.5};\ 9\lambda_a\sqrt{f'_c}c_{a1}^{1.5}|$ (Eq. D-33 & Eq. D-34)

l_e (in)	d_a (in)	λ_a	f'_c (psi)	c_{a1} (in)	V_{by} (lb)
4.50	1.00	1.00	3000	12.00	20492

$\phi V_{cby} = \phi\ (A_{Vc} / A_{Vco})\Psi_{ed,V}\Psi_{c,V}\Psi_{h,V}V_{by}$ (Sec. D.4.1 & Eq. D-30)

A_{Vc} (in²)	A_{Vco} (in²)	$\Psi_{ed,V}$	$\Psi_{c,V}$	$\Psi_{h,V}$	V_{by} (lb)	ϕ	ϕV_{cby} (lb)
480.00	648.00	0.900	1.000	1.061	20492	0.70	10143

Shear parallel to edge in y-direction:

$V_{bx} = \min|7(l_e / d_a)^{0.2}\sqrt{d_a}\lambda_a\sqrt{f'_c}c_{a1}^{1.5};\ 9\lambda_a\sqrt{f'_c}c_{a1}^{1.5}|$ (Eq. D-33 & Eq. D-34)

l_e (in)	d_a (in)	λ_a	f'_c (psi)	c_{a1} (in)	V_{bx} (lb)
4.50	1.00	1.00	3000	12.00	20492

$\phi V_{cby} = \phi\ (2)(A_{Vc} / A_{Vco})\Psi_{ed,V}\Psi_{c,V}\Psi_{h,V}V_{bx}$ (Sec. D.4.1 & Eq. D-30)

A_{Vc} (in²)	A_{Vco} (in²)	$\Psi_{ed,V}$	$\Psi_{c,V}$	$\Psi_{h,V}$	V_{bx} (lb)	ϕ	ϕV_{cby} (lb)
480.00	648.00	1.000	1.000	1.061	20492	0.70	22540

10. Concrete Pryout Strength of Anchor in Shear (Sec. D.6.3)

$\phi V_{cp} = \phi k_{cp}N_{cb} = \phi k_{cp}(A_{Nc} / A_{Nco})\Psi_{ed,N}\Psi_{c,N}\Psi_{cp,N}N_b$ (Eq. D-40)

k_{cp}	A_{Nc} (in²)	A_{Nco} (in²)	$\Psi_{ed,N}$	$\Psi_{c,N}$	$\Psi_{cp,N}$	N_b (lb)	ϕ	ϕV_{cp} (lb)
2.0	182.25	182.25	1.000	1.000	1.000	8888	0.70	12444

11. Interaction of Tensile and Shear Forces (Sec. D.7)

Tension	Factored Load, N_{ua} (lb)	Design Strength, ϕN_n (lb)	Ratio	Status
Steel	100	23930	0.00	Pass
Concrete breakout	100	3667	0.03	Pass
Pullout	**100**	**3479**	**0.03**	**Pass (Governs)**

Shear	Factored Load, V_{ua} (lb)	Design Strength, ϕV_n (lb)	Ratio	Status
Steel	**142**	**9012**	**0.02**	**Pass (Governs)**
T Concrete breakout y+	142	10143	0.01	Pass
|| Concrete breakout x+	142	22540	0.01	Pass
Pryout	142	12444	0.01	Pass

Interaction check	$N_{ua}/\phi N_n$	$V_{ua}/\phi V_n$	Combined Ratio	Permissible	Status
Sec. D.7.1	0.03	0.00	2.9 %	1.0	Pass

1"Ø CS Strong-Bolt 2, hnom:5.25" (133mm) meets the selected design criteria.

12. Warnings

BUEHLER & BUEHLER ASSOCIATES
STRUCTURAL ENGINEERS. INC.
600 Q Street, Suite 200
SACRAMENTO, CALIFORNIA 95814

JOB	VA Mather - Chiller Upgrade		
JOB NO		DATE	10/15/2014
CLIENT	Hillard BY SMS	SHEET NO	SA-4

Mechanical Equipment Anchorage Calc - BASE MOUNTED

Unit Identification: **(N) Cooling Tower Pump** (CTP)

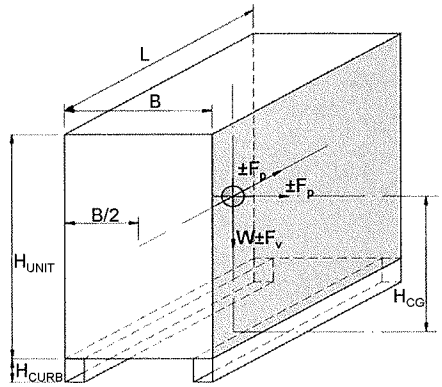

W_p =	1170 lbs	unit weight
B =	21.50 in	width
L =	44.00 in	length
H_{UNIT} =	27.50 in	unit height
H_{CG} =	18.38 in	center of gravity height
H_{CURB} =	0.00 in	curb height

Seismic Load (ASCE 7-10, Ch. 13)

a_p and R_p obtained from ASCE 7-10, Tables 13.5-1 and 13.6-1

a_p =	1.00	R_p =	2.50	I_p =	1.50	S_{DS} =	0.498
h =	18.00 ft	z =	18.00 ft			Apply $F_v = 0.2S_{DS}W_p$?	Yes
				Connection:	Steel	Ωo =	2.5

$F_p = (0.4[(a_p)(S_{DS})(I_p)(1+2(z/h)]/R_p) \times W_p$ = 0.359 Wp $F_v = 0.2(S_{DS})W_p$ = 0.100 Wp

$F_{p\text{-}MIN} = 0.3(S_{DS})(I_p) \times W_p$ = 0.224 Wp

$F_{p\text{-}MAX} = 1.6(S_{DS})(I_p) \times (W_p)$ = 1.195 Wp

STRENGTH		SERVICE	
$F_p = V_h$ =	**420 lbs**	$0.7F_p = V_h$=	**294 lbs**
$F_v = V_v$ =	**117 lbs**	$0.7F_v = V_v$ =	**82 lbs**

Use: **STRENGTH**

Unit Anchorage:

Load Combination: 0.9D ± 1.0E

Fp in Direction 1

$M_{OT} = 1.0V_h H_{CG} + 1.0V_V\,(B/2)$ = 747 lb-ft

$M_R = 0.9\ W_p(B/2)$ = 943 lb-ft ***No Uplift***

$T = (M_{OT} - M_R)/B$ = **0 lbs**

$C = M_{OT}/B + W_p/2$ = **943 lbs** (Max Compression due to overturning effects of unit)

Fp in Direction 2

$M_{OT} = 1.0V_h H_{CG} + 1.0V_V\,(B/2)$ = 856 lb-ft

$M_R = 0.9\ W_p(B/2)$ = 1931 lb-ft ***No Uplift***

$T = (M_{OT} - M_R)/B$ = **0 lbs**

$C = M_{OT}/B + W_p/2$ = **760 lbs** (Max Compression due to overturning effects of unit)

100% Direction 1 + 30% Direction 2	**TENSION =**	**0 lbs**	**SHEAR =**	**1363 lbs**
100% Direction 2 + 30% Direction 1	**TENSION =**	**0 lbs**	**SHEAR =**	**1363 lbs**

Anchorage **Anchor capacity per Simpson Calcs**

	ϕ =	1	ϕ =	0.7
Anchor capacity:	ϕN_n =	1845 lbs	ϕV_n =	3465 lbs
	Failure Mechanism:	Pullout Strength		Steel Strength

There are the following effective anchors per side: n_{UPLIFT} = **3**

n_{SHEAR} = **6**

100% Direction 2 + 30% Direction 1 Controls

$N_{ua} = T/n_{UPLIFT}$ = **0 lbs** per anchor $N_{ua}/\phi N_n$ = 0.00

V_{ua} = Vh/Nshear = **227 lbs** per anchor $V_{ua}/\phi V_n$ = 0.07

Unity check = $(N_{ua}/\phi N_n) + (V_{ua}/\phi V_n)$ = 0.12 < 1.0, OK

Use 1/2" dia Simpson SB2 with 4.5" embed
Use 1 1/2" x 3/16" PL washers with welds on 2 sides

SA-4A

SIMPSON Strong-Tie®

Anchor Designer™ Software
Version 2.0.5154.12

Company:		Date:	6/26/2014
Engineer:		Page:	1/4
Project:			
Address:			
Phone:			
E-mail:			

1.Project information

Customer company:
Customer contact name:
Customer e-mail:
Comment:

Project description:
Location:
Fastening description:

2. Input Data & Anchor Parameters

General
Design method:ACI 318-11
Units: Imperial units

Anchor Information:
Anchor type: Torque controlled expansion anchor
Material: Carbon Steel
Diameter (inch): 0.500
Nominal Embedment depth (inch): 2.750
Effective Embedment depth, h_{ef} (inch): 2.250
Code report: ICC-ES ESR-3037
Anchor category: 1
Anchor ductility: Yes
h_{min}: See Figure 1
C_{min} (inch): 4.50
S_{min} (inch): 6.75

Load and Geometry
Load factor source: ACI 318 Section 9.2
Load combination: not set
Seismic design: Yes
Ductility section for tension: D.3.3.4.2 not applicable
Ductility section for shear: D.3.3.5.2 not applicable
Ω_0 factor: not set

Base Material
Concrete: Upper flute, Soffit of sand-lightweight concrete over metal deck
State: Cracked
Compressive strength, f'_c (psi): 3000
$\Psi_{c,V}$: 1.0
Reinforcement condition: B tension, B shear
Supplemental reinforcement: Not applicable

SIMPSON Strong-Tie®

Anchor Designer™ Software
Version 2.0.5154.12

Company:		Date:	6/26/2014
Engineer:		Page:	2/4
Project:			
Address:			
Phone:			
E-mail:			

<Figure 1>

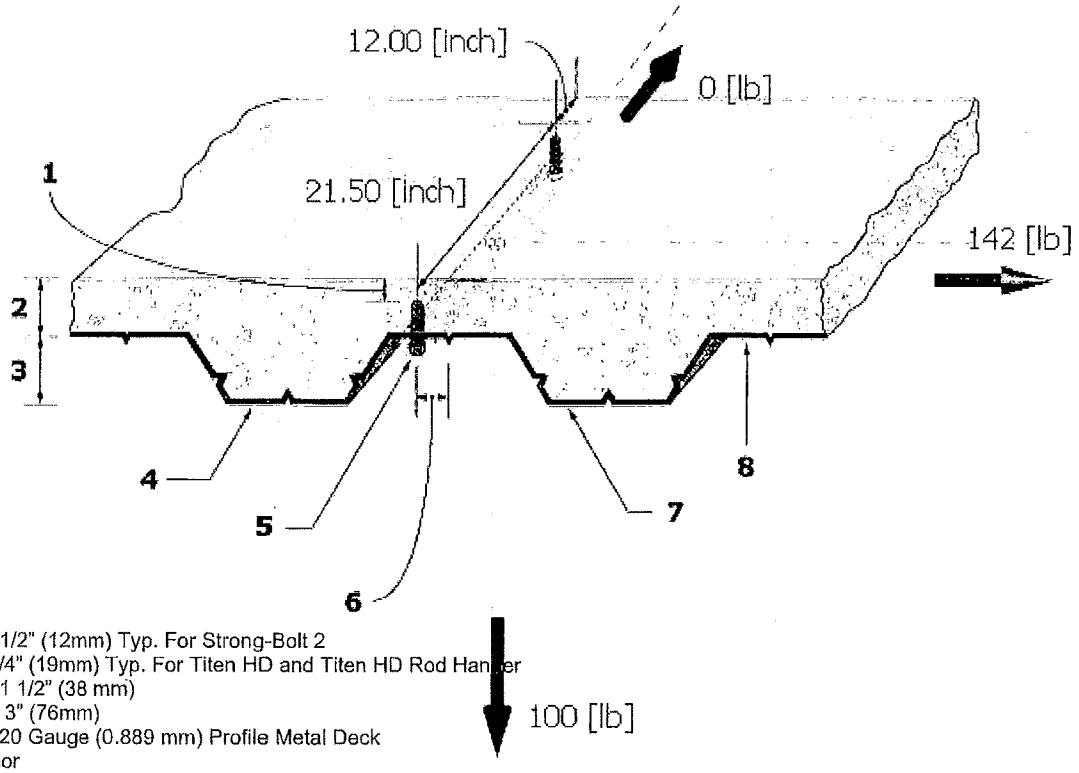

1 = Min. 1/2" (12mm) Typ. For Strong-Bolt 2
Min. 3/4" (19mm) Typ. For Titen HD and Titen HD Rod Hanger
2 = Min. 1 1/2" (38 mm)
3 = Max. 3" (76mm)
4 = Min. 20 Gauge (0.889 mm) Profile Metal Deck
5 = Anchor
6 = Max 1" (25mm) Offset, Typ.
7 = Lower Flute (Ridge)
8 = Upper Flute (Valley)

Recommended Anchor
Anchor Name: Strong-Bolt® 2 - 1/2"Ø CS Strong-Bolt 2, hnom:2.75" (70mm)
Code Report Listing: ICC-ES ESR-3037

SH-4C

SIMPSON Strong-Tie®

Anchor Designer™ Software
Version 2.0.5154.12

Company:		Date:	6/26/2014
Engineer:		Page:	3/4
Project:			
Address:			
Phone:			
E-mail:			

3. Resulting Anchor Forces

Anchor	Tension load, N_{ua} (lb)	Shear load x, V_{uax} (lb)	Shear load y, V_{uay} (lb)	Shear load combined, $\sqrt{(V_{uax})^2+(V_{uay})^2}$ (lb)
1	50.0	0.0	71.0	71.0
2	50.0	0.0	71.0	71.0
Sum	100.0	0.0	142.0	142.0

Maximum concrete compression strain (‰): 0.00
Maximum concrete compression stress (psi): 0
Resultant tension force (lb): 0
Resultant compression force (lb): 0
Eccentricity of resultant tension forces in x-axis, e'_{Nx} (inch): 0.00
Eccentricity of resultant tension forces in y-axis, e'_{Ny} (inch): 0.00
Eccentricity of resultant shear forces in x-axis, e'_{Vx} (inch): 0.00
Eccentricity of resultant shear forces in y-axis, e'_{Vy} (inch): 0.00

4. Steel Strength of Anchor in Tension(Sec. D.5.1)

N_{sa} (lb)	ϕ	ϕN_{sa} (lb)
12100	0.75	9075

6. Pullout Strength of Anchor in Tension (Sec. D.5.3)

$0.75\phi N_{pn} = 0.75\phi\Psi_{c,P}\lambda_a N_p(f'_c/2{,}500)^n$ (Sec. D.4.1, Eq. D-13 & Code Report)

$\Psi_{c,P}$	λ_a	N_p (lb)	f'_c (psi)	n	ϕ	$0.75\phi N_{pn}$ (lb)
1.0	1.00	3785	3000	0.50	0.65	1845

SIMPSON Strong-Tie®

Anchor Designer™ Software
Version 2.0.5154.12

Company:		Date:	6/26/2014
Engineer:		Page:	4/4
Project:			
Address:			
Phone:			
E-mail:			

8. Steel Strength of Anchor in Shear (Sec. D.6.1)

V_{sa} (lb)	ϕ_{grout}	ϕ	$\phi_{grout}\phi V_{sa}$ (lb)
5330	1.0	0.65	3465

11. Interaction of Tensile and Shear Forces (Sec. D.7)

Tension	Factored Load, N_{ua} (lb)	Design Strength, ϕN_n (lb)	Ratio	Status
Steel	50	9075	0.01	Pass
Pullout	**50**	**1845**	**0.03**	**Pass (Governs)**

Shear	Factored Load, V_{ua} (lb)	Design Strength, ϕV_n (lb)	Ratio	Status
Steel	**71**	**3465**	**0.02**	**Pass (Governs)**

Interaction check	$N_{ua}/\phi N_n$	$V_{ua}/\phi V_n$	Combined Ratio	Permissible	Status
Sec. D.7.1	0.03	0.00	2.7 %	1.0	Pass

1/2"Ø CS Strong-Bolt 2, hnom:2.75" (70mm) meets the selected design criteria.

12. Warnings

- Determination of concrete breakout strengths in tension and shear, side-face-blowout strength, and pryout strength is not required for anchors installed in the soffit of concrete over metal deck. Refer to ICC-ES ESR code report.

- Per designer input, the tensile component of the strength-level earthquake force applied to anchors does not exceed 20 percent of the total factored anchor tensile force associated with the same load combination. Therefore the ductility requirements of D.3.3.4.3 for tension need not be satisfied – designer to verify.

- Per designer input, the shear component of the strength-level earthquake force applied to anchors does not exceed 20 percent of the total factored anchor shear force associated with the same load combination. Therefore the ductility requirements of D.3.3.5.3 for shear need not be satisfied – designer to verify.

- Designer must exercise own judgement to determine if this design is suitable.

- Refer to manufacturer's product literature for hole cleaning and installation instructions.

Mechanical Equipment Anchorage Calc - BASE MOUNTED

Unit Identification: **(N) Filter Unit**

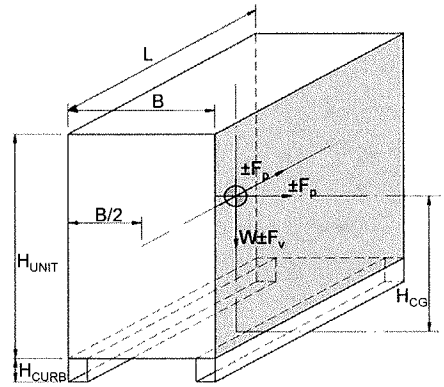

W_p =	3000 lbs	unit weight
B =	38.50 in	width
L =	58.50 in	length
H_{UNIT} =	85.00 in	unit height
H_{CG} =	34.33 in	center of gravity height
H_{CURB} =	6.00 in	curb height

Seismic Load (ASCE 7-10, Ch. 13)

a_p and R_p obtained from ASCE 7-10, Tables 13.5-1 and 13.6-1

a_p =	1.00	R_p =	2.50	I_p =	1.50	S_{DS} =	0.498
h =	18.00 ft	z =	18.00 ft			Apply $F_v = 0.2S_{DS}W_p$?	Yes
				Connection:	Steel	Ωo =	2.5

$F_p = (0.4[(a_p)(S_{DS})(I_p)(1+2(z/h)]/R_p) \times W_p$ = 0.359 Wp $F_v = 0.2(S_{DS})W_p$ = 0.100 Wp

$F_{p\text{-}MIN} = 0.3(S_{DS})(I_p) \times W_p$ = 0.224 Wp

$F_{p\text{-}MAX} = 1.6(S_{DS})(I_p) \times (W_p)$ = 1.195 Wp

STRENGTH		SERVICE	
$F_p = V_h$ =	**1076 lbs**	**$0.7F_p = V_h$=**	**753 lbs**
$F_v = V_v$ =	**299 lbs**	**$0.7F_v = V_v$ =**	**209 lbs**

Use: **STRENGTH**

Unit Anchorage:

Load Combination: 0.9D ± 1.0E

Fp in Direction 1

$M_{OT} = 1.0V_h H_{CG} + 1.0V_V\,(B/2)$ = 3019 lb-ft

$M_R = 0.9\ W_p(B/2)$ = 4331 lb-ft ***No Uplift***

$T = (M_{OT} - M_R)/B$ = **0 lbs**

$C = M_{OT}/B + W_p/2$ = **2291 lbs** (Max Compression due to overturning effects of unit)

Fp in Direction 2

$M_{OT} = 1.0V_h H_{CG} + 1.0V_V\,(B/2)$ = 3268 lb-ft

$M_R = 0.9\ W_p(B/2)$ = 6581 lb-ft ***No Uplift***

$T = (M_{OT} - M_R)/B$ = **0 lbs**

$C = M_{OT}/B + W_p/2$ = **2020 lbs** (Max Compression due to overturning effects of unit)

100% Direction 1 + 30% Direction 2	**TENSION =**	**0 lbs**	**SHEAR =**	**3496 lbs**
100% Direction 2 + 30% Direction 1	**TENSION =**	**0 lbs**	**SHEAR =**	**3496 lbs**

Anchorage

Anchor capacity per Simpson Calcs

ϕ = 1 ϕ = 0.7

Anchor capacity: ϕN_n = 1845 lbs ϕV_n = 3465 lbs

Failure Mechanism: Pullout Strength Steel Strength

There are the following effective anchors per side: n_{UPLIFT} = **3**

n_{SHEAR} = **6**

100% Direction 2 + 30% Direction 1 Controls

$N_{ua} = T/n_{UPLIFT}$ = **0 lbs** per anchor $N_{ua}/\phi N_n$ = 0.00

V_{ua} = Vh/Nshear = **583 lbs** per anchor $V_{ua}/\phi V_n$ = 0.17

Unity check = $(N_{ua}/\phi N_n) + (V_{ua}/\phi V_n)$ = 0.32 < 1.0, OK

Use 1/2" dia Simpson SB2 with 4.5" embed
Use 1 1/2" x 3/16" PL washers with welds on 2 sides

BUEHLER & BUEHLER
STRUCTURAL ENGINEERS, INC.

JOB _____
JOB NO. _____ DATE _____
CLIENT _____ BY _____ SHEET NO. S1

ROOF FRAMING EVALUATION

New mech'l unit added on roof of bldg 703 wt ≈ 3000 lbs

Check (e) W18x50 bms for add'l load.

↳ Based on previous structural work, DL = 80 PSF
LL = 20 PSF

Beam span = 30'

Cooling tower = 26000 lbs

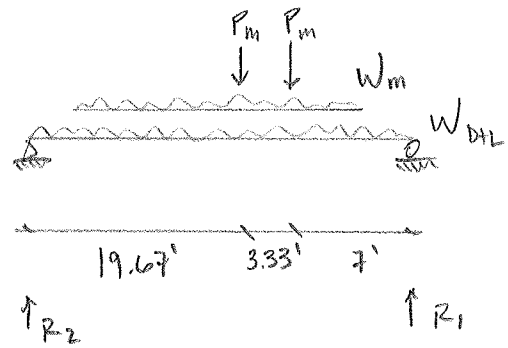

$W_D = 80\ PSF \times 7' = 560\ PLF$

$W_L = 20\ PSF \times 7' = 140\ PLF$

$W_m = 26000\ \#/250\ ft^2 = 104\ PSF \times 4.08'/2 = 212\ PLF$

$P_m = 3000\ \#/4 = 750\ \#$

* see spreadsheet for analysis *

⇒ W18x50 ok ✓

Check (e) W14x26 bm for add'l load

$W_D = 80\ PSF \times 5' = 400\ PLF$

$W_L = 20\ PSF \times 5' = 100\ PLF$

$P_m = 750\ \#$

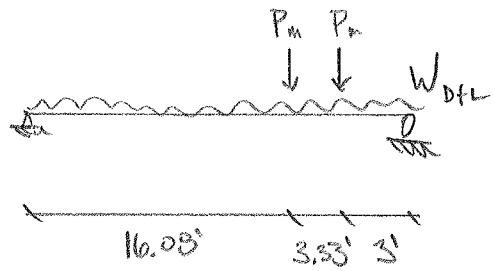

* see spreadsheet for analysis *

⇒ W14x26 ok ✓

BUEHLER & BUEHLER STRUCTURAL ENGINEERS, INC.

JOB	VA Chiller Replacement				
JOB NO.				DATE	10/17/2014
CLIENT	Hilliard	BY	GAM	SHEET NO.	52

Design of Composite Wide Flange Beam for Positive Bending Moments (AISC 13th Edition, Chapter I - ASD)

W14x26

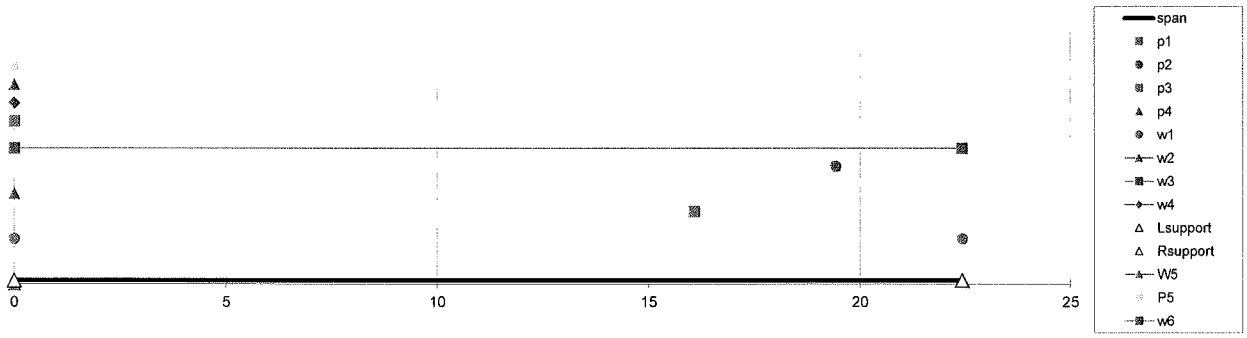

span	22.4ft							
Uniform Loads	$W_{dead\ Left}$	$W_{dead\ Right}$		$W_{live\ Left}$	$W_{live\ Right}$	Start	End	Pre-Composite or Post-Composite
w1	400plf	-		0plf	-	0.0ft	22.4ft	Pre-Composite
w2	0plf	-		0plf	-	0.0ft	0.0ft	NA
w3	0plf	-		100plf	-	0.0ft	22.4ft	Post-Composite
w4	0plf	-		0plf	-	0.0ft	0.0ft	NA
w5	0plf	0plf		0plf	0plf	0.00ft	0.00ft	NA
w6	0plf	0plf		0plf	0plf	0.00ft	0.0ft	NA
point load	P_{Dead}			P_{live}		location		
p1	750 lbs	-		0 lbs	-	16.08ft	-	Post-Composite
p2	750 lbs	-		0 lbs	-	19.42ft	-	Post-Composite
p3	0 lbs	-		0 lbs	-	0.00ft	-	NA
p4	0 lbs	-		0 lbs	-	0.00ft	-	NA
p5	0 lbs	-		0 lbs	-	0.00ft	-	NA

Dead Load	R_{left}=	4796 lbs	R_{right}=	5672 lbs
Live Load	R_{left}=	1121 lbs	R_{right}=	1121 lbs
Total Load	**R_{left}=**	**5917 lbs**	**R_{right}=**	**6793 lbs**
Dead Load	Max Shear=	5672 lb	Max Moment=	28755 ft lb
Live Load	Max Shear=	1121 lb	Max Moment=	6283 ft lb
Total Load	**Max Shear=**	**6793 lb**	**Max Moment=**	**35008 ft lb**

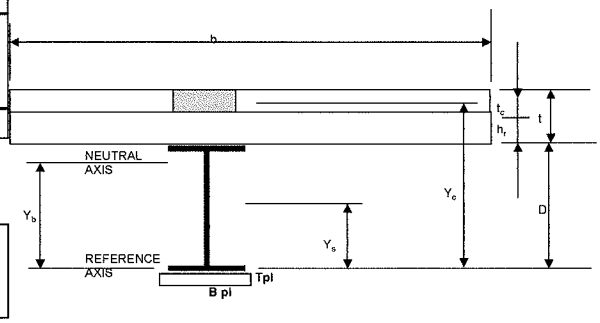

Beam size: **W14X26** $h/t_w = 51.2 < 3.76\sqrt{E/F_y} = 90.6$

OK-Plastic Stress Distribution

Steel Properties

Beam Depth, d =	13.90 in
Section Modulus, S_s =	35.30 in2
Beam/Deck Orientation =	perpendicular
Beam Span, L =	22.42 ft
Beam Spacing, S =	7.00 ft
Steel Modulus, E_s =	29000 ksi
Steel Strength, F_y =	50 ksi
b_f =	5.03 in
t_f =	0.420 in
t_w =	0.255 in
h =d-2tf =	13.06 in

Concrete Properties

Concrete Density, w =	145 pcf
Concrete Strength, f'_c =	3000 psi
Concrete Modulus, E_c =	3156 ksi
E Ratio, $n = E_s/E_c$ =	9.19

Deck Properties

Deck Type =	2W	Deck Depth h_r =	2.00 in	b = $b_L + b_R$ =	67.26 in
Slab Depth t =	5.50 in	Topping Depth t_c =	3.50 in	Ac=b x (tc + hr/2) =	235.41 in2
over ride stud length	4.80 in	Y2=	3.75 in	$A'_c = A_c / n$ =	25.62 in2
length used	4.75 in	t_{eff}=	3.50 in	$Y_s = D / 2$ =	6.95 in

Yo is from the lowest point on the beam assembly to the top of the element

Effective Slab Width

Left		Right	
$b_{L1} = L / 8$ =	33.63 in	$b_{R1} = L / 8$ =	33.63 in
$b_{L2} = S / 2$ =	42.00 in	$b_{R2} = S / 2$ =	42.00 in
b_{L3} =	0.00 in	b_{R3} =	0.00 in
b_L =	33.63 in	b_R =	33.63 in

Shear Studs

diameter =	0.75 in.	Total # of Studs Between point of Zero Moment and Maximum Moment =	8
A_{sc} =	0.44 in2		
# of studs per row =	1	F_u =	60 ksi
R_g =	1.00	Q_n =	15.9 k
R_p =	0.60	*See I3-2d for possible increased value to Rp*	

BUEHLER & BUEHLER STRUCTURAL ENGINEERS, INC.

JOB	VA Chiller Replacement		
JOB NO.		DATE	10/17/2014
CLIENT	Hilliard	BY GAM	SHEET NO. 53

Design of Composite Wide Flange Beam for Positive Bending Moments (AISC 13th Edition, Chapter I - ASD)

W14x26

Neutral Axis

Section	Area or (b_{PL} x t_{PL})		Yo	Y	A x Y	d	d bare steel	A x d^2	Io	I_s bare steel	Q
W beam	7.69 in2		13.90 in	6.95 in	53	-8.23	0.00 in	520.82 in4	245.00 in4	245.00 in	
Concrete	25.62 in2		19.40 in	17.65 in	452	2.47	na	156.34 in4	26.15 in4	na	
Plate 1				0.00 in	0	-15.18 in	-6.95 in	0.00 in4	0.00 in4	0.00 in	0
				0.00 in	0	-15.18 in	-6.95 in	0.00 in4	0.00 in4	0.00 in	0
				0.00 in	0	-15.18 in	-6.95 in	0.00 in4	0.00 in4	0.00 in	0
				0.00 in	0	-15.18 in	-6.95 in	0.00 in4	0.00 in4	0.00 in	
Σ composite		33.31 in2			506			677.16 in4	271.15 in4	na	
Σ bare steel		7.69 in2		6.95 in	53			I_{tr} =	**948.31 in4**	**245.00 in4**	

Y_b = ΣAY / ΣA = 15.18 in **NA in Concrete** Effective Concrete Area = 8.48 in2 Yconc = 15.14

PNA = 11.24 A x Y = 128

Shear Studs

$V'_{CONCRETE}$ =	600.3 k	V_n =	127.2 k	***33.1% Partially Composite***	0.33
$V'_{STEEL\ SECTION}$ =	384.5 k				
$\Sigma Q_n = V'_{SHEAR\ CONNECTORS}$ =	127.2 k	<--governs			

Deflection/Stiffness

$I_{tr} = \Sigma Ad^2 + \Sigma I_o$ = 948.31 in4

$$I_{eff} = I_s + \sqrt{(\Sigma Q_n / C_f)}(I_{tr} - I_s) = 649.6 \text{ in4}$$

$0.75I_{eff}$ = 487.2 in4 (See AISC 360 Ch. I Commentary, page 16.1-308)

$E(0.75I_{eff})$ = 1.41E+10

Pre-composite Checks

M_{DL} =	25.1 k-ft	Ω_b =	1.67	$\Delta_{DL\text{-}PRE}$ =	-0.31 in.	L / 869
M_{LL} =	0.0 k-ft	M_n =	420.8 k-ft	$\Delta_{LL\text{-}PRE}$ =	0.00 in.	
M_{TOTAL} =	25.1 k-ft	M_n / Ω_b =	252.0 k-ft	$\Delta_{TOTAL\text{-}PRE}$ =	-0.31 in.	L / 869
		D/C =	0.10 **OK**			

Post-composite Checks

M_{DL} =	28.8 k-ft	Ω_b =	1.67	$\Delta_{DL\text{-}POST}$ =	-0.02 in.	L / 11095	$\Delta_{DL\text{-}TOTAL}$ =	-0.33	L / 806 **OK**
M_{LL} =	6.3 k-ft	M_n =	284.8 k-ft	$\Delta_{LL\text{-}POST}$ =	-0.04 in.	L / 6909	$\Delta_{LL\text{-}TOTAL}$ =	-0.04	L / 6909 **OK**
M_{TOTAL} =	35.0 k-ft	M_n / Ω_b =	170.5 k-ft	$\Delta_{TOTAL\text{-}POST}$ =	-0.06 in.	L / 4275	Δ_{TOTAL} =	-0.37	L / 722 **OK**
		D/C =	0.21 **OK**						

SUMMARY

W14X26	
16 studs	
Plate 1	0.00 in x 0.00 in
Plate 2	0.00 in x 0.00 in
Plate 3	0.00 in x 0.00 in

BUEHLER & BUEHLER STRUCTURAL ENGINEERS, INC.

JOB	VA Chiller Replacement				
JOB NO.				DATE	10/17/2014
CLIENT	Hilliard	BY	GAM	SHEET NO.	S4

Design of Composite Wide Flange Beam for Positive Bending Moments (AISC 13th Edition, Chapter I - ASD)

W18x50

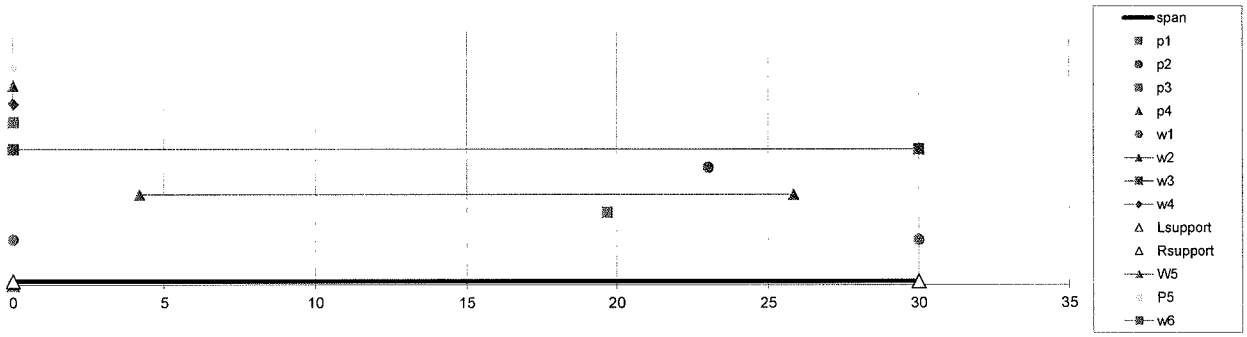

span	30.0ft							
Uniform Loads	$W_{dead\ Left}$	$W_{dead\ Right}$		$W_{live\ Left}$	$W_{live\ Right}$	Start	End	Pre-Composite or Post-Composite
w1	560plf	-		0plf	-	0.0ft	30.0ft	Pre-Composite
w2	212plf	-		0plf	-	4.2ft	25.8ft	Post-Composite
w3	0plf	-		140plf	-	0.0ft	30.0ft	Post-Composite
w4	0plf	-		0plf	-	0.0ft	0.0ft	NA
w5	0plf	0plf		0plf	0plf	0.00ft	0.00ft	NA
w6	0plf	0plf		0plf	0plf	0.00ft	0.0ft	NA
point load	P_{Dead}			P_{live}		location		
p1	750 lbs	-		0 lbs	-	19.67ft	-	Post-Composite
p2	750 lbs	-		0 lbs	-	23.00ft	-	Post-Composite
p3	0 lbs	-		0 lbs	-	0.00ft	-	NA
p4	0 lbs	-		0 lbs	-	0.00ft	-	NA
p5	0 lbs	-		0 lbs	-	0.00ft	-	NA

Dead Load	R_{left}=	11129 lbs	R_{right}=	11763 lbs
Live Load	R_{left}=	2100 lbs	R_{right}=	2100 lbs
Total Load	**R_{left}=**	**13229 lbs**	**R_{right}=**	**13863 lbs**
Dead Load	Max Shear=	11763 lb	Max Moment=	91627 ft lb
Live Load	Max Shear=	2100 lb	Max Moment=	15750 ft lb
Total Load	**Max Shear=**	**13863 lb**	**Max Moment=**	**107351 ft lb**

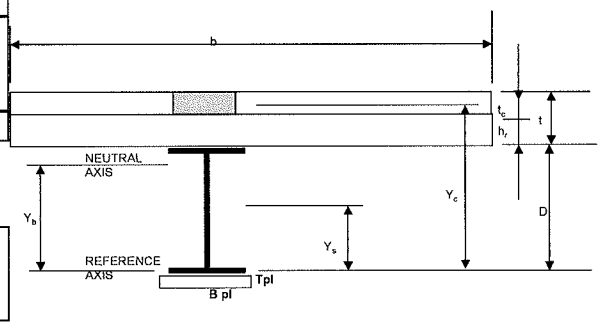

Beam size: **W18X50** $h/t_w = 47.5 < 3.76\sqrt{E/F_y} = 90.6$

OK-Plastic Stress Distribution

Steel Properties

Beam Depth, d =	18.00 in
Section Modulus, S_s =	88.90 in2
Beam/Deck Orientation =	perpendicular
Beam Span, L =	30.00 ft
Beam Spacing, S =	7.00 ft
Steel Modulus, E_s =	29000 ksi
Steel Strength, F_y =	50 ksi
b_f =	7.50 in
t_f =	0.570 in
t_w =	0.355 in
h =d-2tf =	16.86 in

Concrete Properties

Concrete Density, w =	145 pcf
Concrete Strength, f'_c =	3000 psi
Concrete Modulus, E_c =	3156 ksi
E Ratio, n = E_s/E_c =	9.19

Deck Properties

Deck Type =	2W	Deck Depth h_r =	2.00 in	b = $b_L + b_R$ =	84.00 in
Slab Depth t =	5.50 in	Topping Depth t_c =	3.50 in	Ac=b x (tc + hr/2) =	294.00 in2
over ride stud length	4.80 in	Y2=	3.75 in	$A'_c = A_c / n$ =	31.99 in2
length used	4.75 in	t_{eff}=	3.50 in	Y_s = D / 2 =	9.00 in

Yo is from the lowest point on the beam assembly to the top of the element

Effective Slab Width

Left		Right	
b_{L1} = L / 8 =	45.00 in	b_{R1} = L / 8 =	45.00 in
b_{L2} = S / 2 =	42.00 in	b_{R2} = S / 2 =	42.00 in
b_{L3} =	0.00 in	b_{R3} =	0.00 in
b_L =	42.00 in	b_R =	42.00 in

Shear Studs

diameter =	0.75 in.	Total # of Studs Between point of Zero Moment and Maximum Moment =	12
A_{sc} =	0.44 in2		
# of studs per row =	1	F_u =	60 ksi
R_g =	1.00	Q_n =	15.9 k
R_p =	0.60	*See I3-2d for possible increased value to Rp*	

BUEHLER & BUEHLER STRUCTURAL ENGINEERS, INC.

JOB	VA Chiller Replacement		
JOB NO.		DATE	10/17/2014
CLIENT	Hilliard BY GAM	SHEET NO.	55

Design of Composite Wide Flange Beam for Positive Bending Moments (AISC 13th Edition, Chapter I - ASD)

W18x50

Neutral Axis

Section	Area or (b_{PL} x t_{PL})		Yo	Y	A x Y	d	d bare steel	A x d^2	Io	I_s bare steel	Q
W beam	14.70 in2		18.00 in	9.00 in	132	-8.74	0.00 in	1121.91 in4	800.00 in4	800.00 in	
Concrete	31.99 in2		23.50 in	21.75 in	696	4.01	na	515.46 in4	32.66 in4	na	
Plate 1				0.00 in	0	-17.74 in	-9.00 in	0.00 in4	0.00 in4	0.00 in	0
				0.00 in	0	-17.74 in	-9.00 in	0.00 in4	0.00 in4	0.00 in	0
				0.00 in	0	-17.74 in	-9.00 in	0.00 in4	0.00 in4	0.00 in	0
				0.00 in	0	-17.74 in	-9.00 in	0.00 in4	0.00 in4	0.00 in	
Σ composite		46.69 in2			828			1637.37 in4	832.66 in4	na	
Σ bare steel		14.70 in2		9.00 in	132			I_{tr} =	**2470.03 in4**	**800.00 in4**	

Y_b = ΣAY / ΣA = 17.74 in **NA in Steel Top Flange** Effective Concrete Area = 8.31 in2 Yconc = 18.97

PNA = 12.60 A x Y = 158

Shear Studs

$V'_{CONCRETE}$ =	749.7 k	V_n =	190.9 k	***26% Partially Composite***	0.26
$V'_{STEEL\ SECTION}$ =	735.0 k				
$\Sigma Q_n = V'_{SHEAR\ CONNECTORS}$ =	190.9 k	<--governs			

Deflection/Stiffness

$I_{tr} = \Sigma Ad^2 + \Sigma I_o$ = 2470.03 in4 $I_{eff} = I_s + \sqrt{(\Sigma Q_n / C_f)}(I_{tr} - I_s)$ = 1651.0 in4

$0.75I_{eff}$ = 1238.3 in4 (See AISC 360 Ch. I Commentary, page 16.1-308)

$E(0.75I_{eff})$ = 3.59E+10

Pre-composite Checks

M_{DL} =	63.0 k-ft	Ω_b =	1.67	$\Delta_{DL\text{-}PRE}$ =	-0.43 in.	L / 846
M_{LL} =	0.0 k-ft	M_n =	420.8 k-ft	$\Delta_{LL\text{-}PRE}$ =	0.00 in.	
M_{TOTAL} =	63.0 k-ft	M_n / Ω_b =	252.0 k-ft	$\Delta_{TOTAL\text{-}PRE}$ =	-0.43 in.	L / 846
		D/C =	0.25 **OK**			

Post-composite Checks

M_{DL} =	91.6 k-ft	Ω_b =	1.67	$\Delta_{DL\text{-}POST}$ =	-0.12 in.	L / 2892	$\Delta_{DL\text{-}TOTAL}$ =	-0.55	L / 654	**OK**
M_{LL} =	15.8 k-ft	M_n =	593.8 k-ft	$\Delta_{LL\text{-}POST}$ =	-0.07 in.	L / 5236	$\Delta_{LL\text{-}TOTAL}$ =	-0.07	L / 5236	**OK**
M_{TOTAL} =	107.4 k-ft	M_n / Ω_b =	355.6 k-ft	$\Delta_{TOTAL\text{-}POST}$ =	-0.19 in.	L / 1863	Δ_{TOTAL} =	-0.62	L / 582	**OK**
		D/C =	0.30 **OK**							

SUMMARY

W18X50	
24 studs	
Plate 1	0.00 in x 0.00 in
Plate 2	0.00 in x 0.00 in
Plate 3	0.00 in x 0.00 in

SAP2000 Steel Design

Project
Job Number
Engineer SSA

AISC 360-10 STEEL SECTION CHECK (Summary for Combo and Station)
Units : Kip, ft, F

Frame : 1	X Mid: 0.000	Combo: COMB1	Design Type: Beam
Length: 30.000	Y Mid: 0.000	Shape: W18X50	Frame Type: SMF
Loc : 15.736	Z Mid: 0.000	Class: Compact	Princpl Rot: 0.000 degrees

Provision: LRFD	Analysis: Direct Analysis			
D/C Limit=0.950	2nd Order: General 2nd Order		Reduction: Tau-b Fixed	
AlphaPr/Py=0.000	AlphaPr/Pe=0.000	Tau_b=1.000	EA factor=0.800	EI factor=0.800
PhiB=0.900	PhiC=0.900	PhiTY=0.900	PhiTF=0.750	
PhiS=0.900	PhiS-RI=1.000	PhiST=0.900		
A=0.102	I33=0.039	r33=0.615	S33=0.051	Av3=0.049
J=5.980E-05	I22=0.002	r22=0.138	S22=0.006	Av2=0.044
E=4176000.000	fy=7200.000	Ry=1.100	z33=0.058	Cw=0.001
RLLF=1.000	Fu=9360.000		z22=0.010	

STRESS CHECK FORCES & MOMENTS (Combo COMB1)

Location	Pu	Mu33	Mu22	Vu2	Vu3	Tu
15.736	0.000	138.424	0.000	0.586	0.000	0.000

PMM DEMAND/CAPACITY RATIO (H1.3b,H1-2)

D/C Ratio: 0.687 = 0.000 + 0.687 + 0.000
= (Pr/Pc) + (Mr33/Mc33)^2 + (Mr22/Mc22)

AXIAL FORCE & BIAXIAL MOMENT DESIGN (H1.3b,H1-2)

Factor	L	K1	K2	B1	B2	Cm
Major Bending	1.000	1.000	1.000	1.000	1.000	1.000
Minor Bending	0.733	1.000	1.000	1.000	1.000	1.000

	Lltb	Kltb	Cb
LTB	0.733	1.000	1.068

	Pu Force	phi*Pnc Capacity	phi*Pnt Capacity
Axial	0.000	130.098	661.500

	Mu Moment	phi*Mn Capacity	phi*Mn No LTB
Major Moment	138.424	167.032	378.750
Minor Moment	0.000	62.250	

SHEAR CHECK

	Vu Force	phi*Vn Capacity	Stress Ratio	Status Check
Major Shear	0.586	191.700	0.003	OK
Minor Shear	0.000	230.850	0.000	OK

CONNECTION SHEAR FORCES FOR BEAMS

	VMajor Left	VMajor Right
Major (V2)	17.400	17.845

* Neglecting composite Action *

MECH'L UNIT SUPPORT

Use WF bms to support unit and distribute load to (e) bms

Span = 5FT

$W_{DL} = 3000\#/2 \times 5FT = 300$ PLF $\quad W_{LL} = 20PSF \times 2FT = 40PLF$

$W_u = 1.2(300PLF) + 1.6(40PLF) = 424$ PLF

$V_u = 424PLF \times 5'/2 = 1060\#$

$M_u = 424PLF \times 5'^2/8 = 1325\#'$

$Z_{req'd} = 1325\#'(12)/0.9 \times 50ksi = 0.353\ in^3$

$I_{req'd} = 450(340PLF)(5')^3/29000ksi = 0.659\ in^4$ → <u>use W6x12</u>

$Z = 0.3\ in^3$

$I = 22.1\ in^4$

Mechanical Equipment Anchorage Calc - BASE MOUNTED

Unit Identification: **(N) Filter Unit**

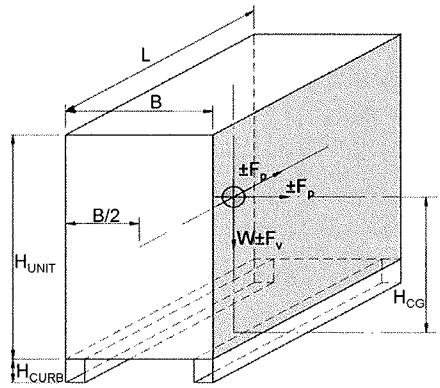

W_p =	3000 lbs	unit weight
B =	38.50 in	width
L =	58.50 in	length
H_{UNIT} =	85.00 in	unit height
H_{CG} =	27.25 in	center of gravity height
H_{CURB} =	6.00 in	curb height

Seismic Load (ASCE 7-10, Ch. 13)

a_p and R_p obtained from ASCE 7-10, Tables 13.5-1 and 13.6-1

a_p =	1.00	R_p =	2.50	I_p =	1.50	S_{DS} =	0.498
h =	18.00 ft	z =	18.00 ft			Apply $F_v = 0.2S_{DS}W_p$?	Yes
				Connection:	Steel	Ωo =	2.5

$F_p = (0.4[(a_p)(S_{DS})(I_p)(1+2(z/h)]/R_p) \times W_p$ = 0.359 Wp

$F_v = 0.2(S_{DS})W_p$ = 0.100 Wp

$F_{p\text{-}MIN} = 0.3(S_{DS})(I_p) \times W_p$ = 0.224 Wp

$F_{p\text{-}MAX} = 1.6(S_{DS})(I_p) \times (W_p)$ = 1.195 Wp

STRENGTH	
$F_p = V_h$ =	1076 lbs
$F_v = V_v$ =	299 lbs

SERVICE	
$0.7F_p = V_h$=	753 lbs
$0.7F_v = V_v$ =	209 lbs

Use: **STRENGTH**

Unit Anchorage:

Load Combination: 0.9D ± 1.0E

Fp in Direction 1

$M_{OT} = 1.0V_h H_{CG} + 1.0V_V ({}^{B}/_{2})$ = 2384 lb-ft

$M_R = 0.9\ W_p({}^{B}/_{2})$ = 4331 lb-ft ***No Uplift***

$T = (M_{OT} - M_R)/B$ = **0 lbs**

$C = {}^{M_{OT}}/_{B} + {}^{W_p}/_{2}$ = **2093 lbs** (Max Compression due to overturning effects of unit)

Fp in Direction 2

$M_{OT} = 1.0V_h H_{CG} + 1.0V_V ({}^{B}/_{2})$ = 2633 lb-ft

$M_R = 0.9\ W_p({}^{B}/_{2})$ = 6581 lb-ft ***No Uplift***

$T = (M_{OT} - M_R)/B$ = **0 lbs**

$C = {}^{M_{OT}}/_{B} + {}^{W_p}/_{2}$ = **1890 lbs** (Max Compression due to overturning effects of unit)

100% Direction 1 + 30% Direction 2	**TENSION =**	**0 lbs**	**SHEAR =**	**3496 lbs**
100% Direction 2 + 30% Direction 1	**TENSION =**	**0 lbs**	**SHEAR =**	**3496 lbs**

Anchorage **Anchor capacity per AISC**

	ϕ =	0.75	ϕ =	0.75
Anchor capacity:	ϕN_n =	3727 lbs	ϕV_n =	1988 lbs
Failure Mechanism:		Steel Strength		Steel Strength

There are the following effective anchors per side: n_{UPLIFT} = **2**

n_{SHEAR} = **4**

100% Direction 2 + 30% Direction 1 Controls

$N_{ua} = T/n_{UPLIFT}$ = **0 lbs** per anchor $N_{ua}/\phi N_n$ = 0.00

V_{ua} = Vh/Nshear = **874 lbs** per anchor $V_{ua}/\phi V_n$ = 0.44

Unity check = $(N_{ua}/\phi N_n) + (V_{ua}/\phi V_n)$ = 0.23 < 1.0, OK

Use 3/8" dia A307 thru bolts (4 total)

Pipe Joint Design

Bldg 702 ⇒ Ht = 21 ft

Bldg 703 ⇒ Ht = 17 ft

$\Delta_a = 0.020 h_{sx}$

↳ $\Delta_{a_{702}} = 0.020 (21' \times 12) = 5.04''$

$\Delta_{a_{703}} = 0.020 (17' \times 12) = 4.08''$

$\delta = (5.04^2 + 4.08^2)^{1/2} = 6.48''$ ≈ 6.5" max for seismic joint

Check Pipe Max Span

Span = 10 ft

2 - 6" ϕ pipes, 1 - 12" ϕ pipe

$W_6 = 31.7$ PLF (wet)

$W_{12} = 98.5$ PLF (wet)

6" pipe ⇒ $W_u = 1.2 \times 31.7$ PLF = 38 PLF

$V_u = 190$ #

$M_u = 475$ #'

$Z_{req'd} = 475\#'(12) / 0.9 \times 35$ ksi $= 0.174$ in³

$I_{req'd} = 450 (32 PLF)(10')^3 / 29000$ ksi $= 0.497$ in⁴ ⇒ 6" pipe ok ✓

Z = 10.6

I = 26.5

BUEHLER & BUEHLER
STRUCTURAL ENGINEERS, INC.

JOB _____
JOB NO. _____ DATE _____
CLIENT _____ BY _____ SHEET NO. 59

CHECK PIPE MAX SPAN

SPAN = 10 FT

12" pipe ⇒ W_u = 98.5 PLF × 1.2 = 118 PLF

V_u = 590 #

M_u = 1475 #'

$Z_{req'd}$ = 1475 #'(12)/0.9×35 ksi = 0.56 in³

$I_{req'd}$ = 450 (98.5 PLF) (10')³/29000 ksi = 1.53 in⁴ ⇒ 12" pipe ok

I = 362 in⁴

Z = 53.7 in³

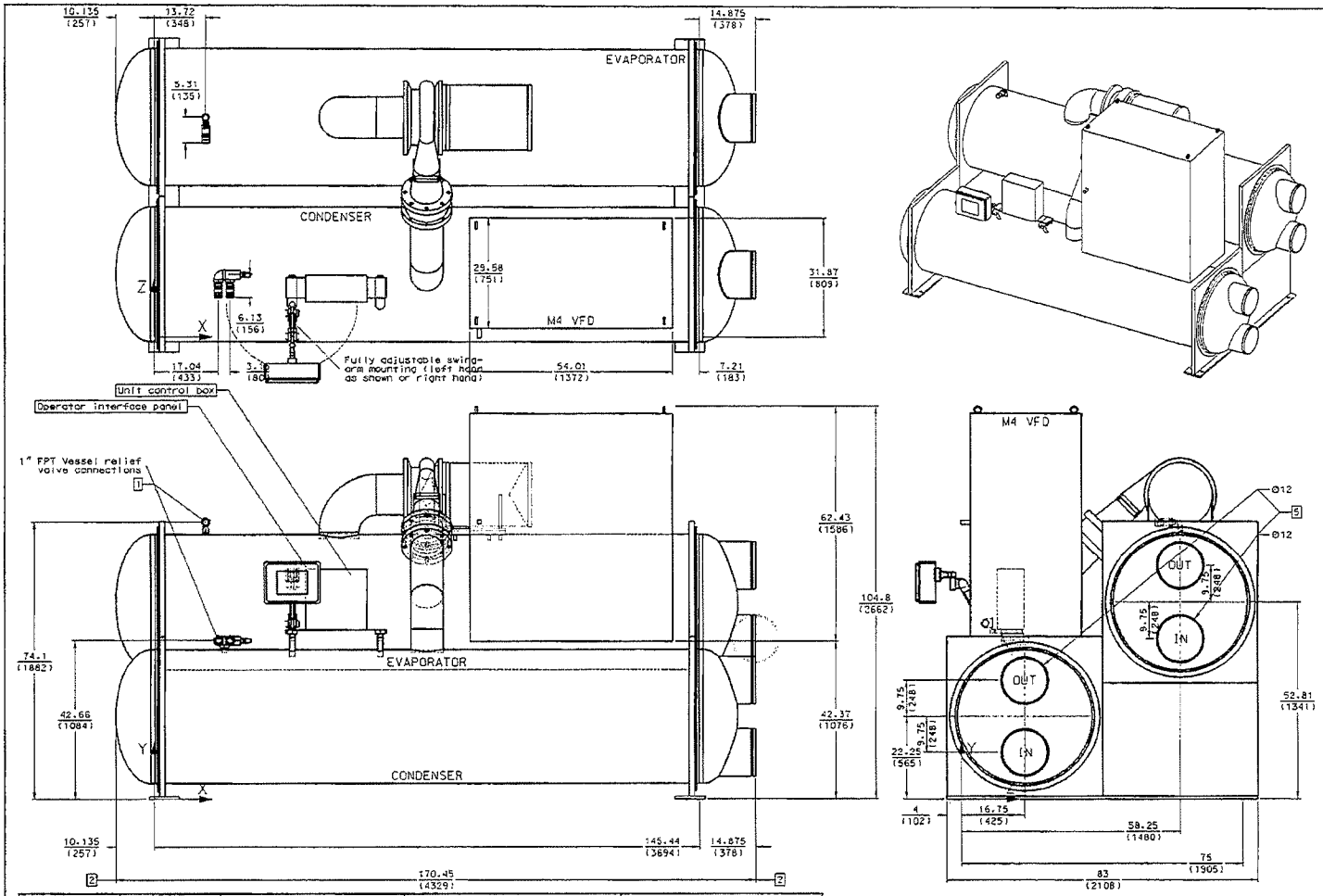

	Refrigerant lbs (kg)	Total Weight (inc. Refrigerant) lbs (kg)	Water Volume gal (l)		Center of Gravity ins (mm)		
			Evap	Cond	X	Y	Z
Operating	1730 (785)	23275 (10557)	188 (710)	285 (1080)	80 (2036)	41 (1052)	39 (982)
Shipping		19329 (8768)	- (-)	- (-)	81 (2062)	42 (1071)	39 (987)

1. 1 in. (25 mm) FPT evaporator and condenser relief valves must be piped per ANSI/ASHRAE 15.
2. At a minimum, length of tube sheet to tube sheet dimensions is required at either end for tube removal, 36 in. (914 mm) is required at other end and each side and top for service.
3. Final connections must allow for 0.5 in. (12.7 mm) manufacturing tolerance.
4. 2.5 in. (64 mm) diameter lifting holes are provided. See installation manual for lifting instructions.
5. All water connections are given in standard U.S. pipe sizes. Standard connections are suitable for welding or victaulic couplings.
6. Vibration isolator pads are provided for field installation (0.25 in (6 mm) thick when loaded).
7. If main power wiring is brought up through the floor, this wiring must be outside the envelope of the unit.
8. The shipping skid adds 4 in. (105 mm) to the overall unit height.
9. Dimensions shown are for units with standard 150 psi (1034 kPa) design water side pressure. Check factory for unit dimensions with higher pressures.
10. Overall height is shown from floor to VFD lifting eye bolt. Deduct 2" when lifting eye bolts are removed.

Product Drawing	Unit Tag: Option 2			Sales Office: Norman Wright (San Francisco)		DAIKIN
Product: Magnitude™ Chiller	Project Name: VA MATHER			Sales Engineer: Tom Lew		13600 Industrial Park Blvd. Minneapolis, MN5544
Model: WME0700S/E3612-2RA/C3612-2RA	Date: 13/05/2014	Ver/Rev:	Sheet: 1 of 5	Scale: NTS	Tolerance: +/- 1.0"	Dwg Units: in (mm) www.DaikinApplied.com

WME0700SSM4RSAACE3612JU2RAC40420CCYBC3612EAYY2RAC40943CCYBA134173E2YYEAYYYYYYYYYYYYYYYH2B15AYRY1BA0700UYYYJYY0AVFDM450DYYYYYYYRAAST05190000YYYYYYN1UMC208SYYYY03200000Y

No change to this drawing may be made unless approved in writing by Daikin Applied. Purchaser must determine that the equipment is fit and sufficient for the job specifications

A

A2

Series 1510 6E Centrifugal Pump Submittal

B-225.8E

5CHP

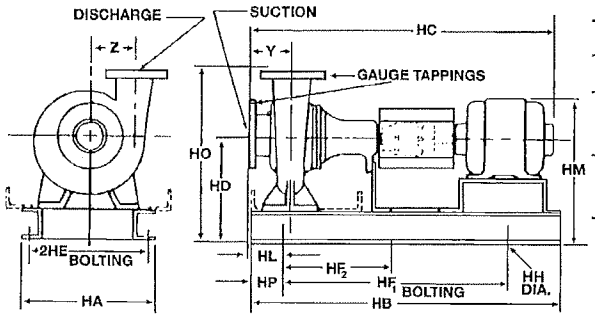

FLANGE DIMENSIONS IN INCHES (MM)			
	SIZE	THICKNESS	O.D.
Discharge	6" (152)	1-7/16" (37)	12-1/8" (308)
Suction	8" (203)	1-5/8" (41)	14-3/4" (375)

FLANGES ARE 125# ANSI - STANDARD
250# ANSI - AVAILABLE

DIMENSIONS - Inches (mm)

STANDARD SEAL 1510, 1510-F

MOTOR FRAME	HA	HB	HC MAX	HD	2HE	HF_1	HF_2	HH	HL	HM MAX	HO	HP	Y	Z
	"L" FRAME													
254T	24 (610)	56 (1422)	47-5/8 (1210)	16-1/2 (419)	21-1/2 (546)	44 (1118)	22 (559)	1 (25)	6 (152)	23-3/8 (594)	27-1/2 (698)	6 (152)	6-1/8 (156)	8-15/32 (215)
256T	24 (610)	56 (1422)	49-3/8 (1254)	16-1/2 (419)	21-1/2 (546)	44 (1118)	22 (559)	1 (25)	6 (152)	23-3/8 (594)	27-1/2 (698)	6 (152)	6-1/8 (156)	8-15/32 (215)
284T	24 (610)	56 (1422)	50-5/16 (1278)	16-1/2 (419)	21-1/2 (546)	44 (1118)	22 (559)	1 (25)	6 (152)	24-1/2 (622)	27-1/2 (698)	6 (152)	6-1/8 (156)	8-15/32 (215)
286T	24 (610)	56 (1422)	51-13/16 (1316)	16-1/2 (419)	21-1/2 (546)	44 (1118)	22 (559)	1 (25)	6 (152)	24-1/2 (622)	27-1/2 (698)	6 (152)	6-1/8 (156)	8-15/32 (215)
324T	24 (610)	56 (1422)	53-7/8 (1368)	16-1/2 (419)	21-1/2 (546)	44 (1118)	22 (559)	1 (25)	6 (152)	25-5/8 (651)	27-1/2 (698)	6 (152)	6-1/8 (156)	8-15/32 (215)
326T	24 (610)	56 (1422)	55-3/8 (1407)	16-1/2 (419)	21-1/2 (546)	44 (1118)	22 (559)	1 (25)	6 (152)	25-5/8 (651)	27-1/2 (698)	6 (152)	6-1/8 (156)	8-15/32 (215)
364T	24 (610)	56 (1422)	57-9/16 (1462)	16-1/2 (419)	21-1/2 (546)	44 (1118)	22 (559)	1 (25)	6 (152)	26-3/4 (679)	27-1/2 (698)	6 (152)	6-1/8 (156)	8-15/32 (215)

STUFFING BOX 1510-PF, 1510-S, 1510-D

MOTOR FRAME	HA	HB	HC MAX	HD	2HE	HF_1	HF_2	HH	HL	HM MAX	HO	HP	Y	Z
	"L" FRAME													
254T	24 (610)	56 (1422)	50 (1270)	16-1/2 (419)	21-1/2 (546)	44 (1118)	22 (559)	1 (25)	6 (152)	23-3/8 (594)	27-1/2 (698)	6 (152)	6-1/8 (155)	8-15/32 (215)
256T	24 (610)	56 (1422)	51-3/4 (1314)	16-1/2 (419)	21-1/2 (546)	44 (1118)	22 (559)	1 (25)	6 (152)	23-3/8 (594)	27-1/2 (698)	6 (152)	6-1/8 (155)	8-15/32 (215)
284T	24 (610)	56 (1422)	52-11/16 (1338)	16-1/2 (419)	21-1/2 (546)	44 (1118)	22 (559)	1 (25)	6 (152)	24-1/2 (622)	27-1/2 (698)	6 (152)	6-1/8 (155)	8-15/32 (215)
286T	24 (610)	56 (1422)	54-3/16 (1376)	16-1/2 (419)	21-1/2 (546)	44 (1118)	22 (559)	1 (25)	6 (152)	24-1/2 (622)	27-1/2 (698)	6 (152)	6-1/8 (155)	8-15/32 (215)
324T	24 (610)	56 (1422)	56-1/4 (1429)	16-1/2 (419)	21-1/2 (546)	44 (1118)	22 (559)	1 (25)	6 (152)	25-5/8 (651)	27-1/2 (698)	6 (152)	6-1/8 (155)	8-15/32 (215)
326T	24 (610)	56 (1422)	57-3/4 (1467)	16-1/2 (419)	21-1/2 (546)	44 (1118)	22 (559)	1 (25)	6 (152)	25-5/8 (651)	27-1/2 (698)	6 (152)	6-1/8 (155)	8-15/32 (215)
364T	24 (610)	56 (1422)	59-15/16 (1522)	16-1/2 (419)	21-1/2 (546)	44 (1118)	22 (559)	1 (25)	6 (152)	26-3/4 (679)	27-1/2 (698)	6 (152)	6-1/8 (155)	8-15/32 (215)

Dimensions are subject to change. Not to be used for construction purposes unless certified.

A3

Series 1510 6E Centrifugal Pump Submittal

B-225.8E

PCHP

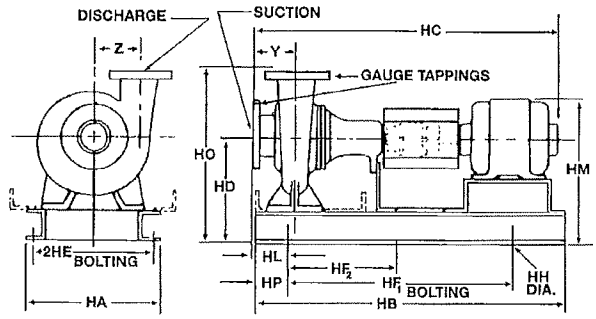

FLANGE DIMENSIONS IN INCHES (MM)			
	SIZE	THICKNESS	O.D.
Discharge	6" (152)	1-7/16" (37)	12-1/8" (308)
Suction	8" (203)	1-5/8" (41)	14-3/4" (375)

FLANGES ARE 125# ANSI - STANDARD
250# ANSI - AVAILABLE

DIMENSIONS - Inches (mm)

STANDARD SEAL 1510, 1510-F

MOTOR FRAME	HA	HB	HC MAX	HD	2HE	HF_1	HF_2	HH	HL	HM MAX	HO	HP	Y	Z
	"L" FRAME													
254T	24 (610)	56 (1422)	47-5/8 (1210)	16-1/2 (419)	21-1/2 (546)	44 (1118)	22 (559)	1 (25)	6 (152)	23-3/8 (594)	27-1/2 (698)	6 (152)	6-1/8 (156)	8-15/32 (215)
256T	24 (610)	56 (1422)	49-3/8 (1254)	16-1/2 (419)	21-1/2 (546)	44 (1118)	22 (559)	1 (25)	6 (152)	23-3/8 (594)	27-1/2 (698)	6 (152)	6-1/8 (156)	8-15/32 (215)
284T	24 (610)	56 (1422)	50-5/16 (1278)	16-1/2 (419)	21-1/2 (546)	44 (1118)	22 (559)	1 (25)	6 (152)	24-1/2 (622)	27-1/2 (698)	6 (152)	6-1/8 (156)	8-15/32 (215)
286T	24 (610)	56 (1422)	51-13/16 (1316)	16-1/2 (419)	21-1/2 (546)	44 (1118)	22 (559)	1 (25)	6 (152)	24-1/2 (622)	27-1/2 (698)	6 (152)	6-1/8 (156)	8-15/32 (215)
324T	24 (610)	56 (1422)	53-7/8 (1368)	16-1/2 (419)	21-1/2 (546)	44 (1118)	22 (559)	1 (25)	6 (152)	25-5/8 (651)	27-1/2 (698)	6 (152)	6-1/8 (156)	8-15/32 (215)
326T	24 (610)	56 (1422)	55-3/8 (1407)	16-1/2 (419)	21-1/2 (546)	44 (1118)	22 (559)	1 (25)	6 (152)	25-5/8 (651)	27-1/2 (698)	6 (152)	6-1/8 (156)	8-15/32 (215)
364T	24 (610)	56 (1422)	57-9/16 (1462)	16-1/2 (419)	21-1/2 (546)	44 (1118)	22 (559)	1 (25)	6 (152)	26-3/4 (679)	27-1/2 (698)	6 (152)	6-1/8 (156)	8-15/32 (215)

STUFFING BOX 1510-PF, 1510-S, 1510-D

MOTOR FRAME	HA	HB	HC MAX	HD	2HE	HF_1	HF_2	HH	HL	HM MAX	HO	HP	Y	Z
	"L" FRAME													
254T	24 (610)	56 (1422)	50 (1270)	16-1/2 (419)	21-1/2 (546)	44 (1118)	22 (559)	1 (25)	6 (152)	23-3/8 (594)	27-1/2 (698)	6 (152)	6-1/8 (155)	8-15/32 (215)
256T	24 (610)	56 (1422)	51-3/4 (1314)	16-1/2 (419)	21-1/2 (546)	44 (1118)	22 (559)	1 (25)	6 (152)	23-3/8 (594)	27-1/2 (698)	6 (152)	6-1/8 (155)	8-15/32 (215)
284T	24 (610)	56 (1422)	52-11/16 (1338)	16-1/2 (419)	21-1/2 (546)	44 (1118)	22 (559)	1 (25)	6 (152)	24-1/2 (622)	27-1/2 (698)	6 (152)	6-1/8 (155)	8-15/32 (215)
286T	24 (610)	56 (1422)	54-3/16 (1376)	16-1/2 (419)	21-1/2 (546)	44 (1118)	22 (559)	1 (25)	6 (152)	24-1/2 (622)	27-1/2 (698)	6 (152)	6-1/8 (155)	8-15/32 (215)
★ 324T	24 (610)	56 (1422)	56-1/4 (1429)	16-1/2 (419)	21-1/2 (546)	44 (1118)	22 (559)	1 (25)	6 (152)	25-5/8 (651)	27-1/2 (698)	6 (152)	6-1/8 (155)	8-15/32 (215)
326T	24 (610)	56 (1422)	57-3/4 (1467)	16-1/2 (419)	21-1/2 (546)	44 (1118)	22 (559)	1 (25)	6 (152)	25-5/8 (651)	27-1/2 (698)	6 (152)	6-1/8 (155)	8-15/32 (215)
364T	24 (610)	56 (1422)	59-15/16 (1522)	16-1/2 (419)	21-1/2 (546)	44 (1118)	22 (559)	1 (25)	6 (152)	26-3/4 (679)	27-1/2 (698)	6 (152)	6-1/8 (155)	8-15/32 (215)

Dimensions are subject to change. Not to be used for construction purposes unless certified.

A4

Series 1510 6E Centrifugal Pump Submittal

B-225.8E

CPT

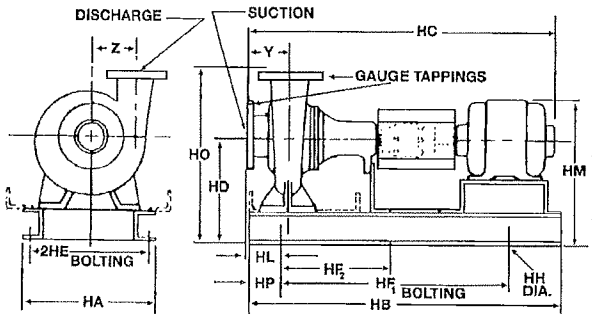

FLANGE DIMENSIONS IN INCHES (MM)			
	SIZE	THICKNESS	O.D.
Discharge	6" (152)	1-7/16" (37)	12-1/8" (308)
Suction	8" (203)	1-5/8" (41)	14-3/4" (375)

FLANGES ARE 125# ANSI - STANDARD
250# ANSI - AVAILABLE

DIMENSIONS - Inches (mm)

STANDARD SEAL 1510, 1510-F

MOTOR FRAME	HA	HB	HC MAX	HD	2HE	HF_1	HF_2	HH	HL	HM MAX	HO	HP	Y	Z
	"L" FRAME													
254T	24 (610)	56 (1422)	47-5/8 (1210)	16-1/2 (419)	21-1/2 (546)	44 (1118)	22 (559)	1 (25)	6 (152)	23-3/8 (594)	27-1/2 (698)	6 (152)	6-1/8 (156)	8-15/32 (215)
256T	24 (610)	56 (1422)	49-3/8 (1254)	16-1/2 (419)	21-1/2 (546)	44 (1118)	22 (559)	1 (25)	6 (152)	23-3/8 (594)	27-1/2 (698)	6 (152)	6-1/8 (156)	8-15/32 (215)
284T	24 (610)	56 (1422)	50-5/16 (1278)	16-1/2 (419)	21-1/2 (546)	44 (1118)	22 (559)	1 (25)	6 (152)	24-1/2 (622)	27-1/2 (698)	6 (152)	6-1/8 (156)	8-15/32 (215)
286T	24 (610)	56 (1422)	51-13/16 (1316)	16-1/2 (419)	21-1/2 (546)	44 (1118)	22 (559)	1 (25)	6 (152)	24-1/2 (622)	27-1/2 (698)	6 (152)	6-1/8 (156)	8-15/32 (215)
324T	24 (610)	56 (1422)	53-7/8 (1368)	16-1/2 (419)	21-1/2 (546)	44 (1118)	22 (559)	1 (25)	6 (152)	25-5/8 (651)	27-1/2 (698)	6 (152)	6-1/8 (156)	8-15/32 (215)
326T	24 (610)	56 (1422)	55-3/8 (1407)	16-1/2 (419)	21-1/2 (546)	44 (1118)	22 (559)	1 (25)	6 (152)	25-5/8 (651)	27-1/2 (698)	6 (152)	6-1/8 (156)	8-15/32 (215)
364T	24 (610)	56 (1422)	57-9/16 (1462)	16-1/2 (419)	21-1/2 (546)	44 (1118)	22 (559)	1 (25)	6 (152)	26-3/4 (679)	27-1/2 (698)	6 (152)	6-1/8 (156)	8-15/32 (215)

STUFFING BOX 1510-PF, 1510-S, 1510-D

MOTOR FRAME	HA	HB	HC MAX	HD	2HE	HF_1	HF_2	HH	HL	HM MAX	HO	HP	Y	Z
	"L" FRAME													
254T	24 (610)	56 (1422)	50 (1270)	16-1/2 (419)	21-1/2 (546)	44 (1118)	22 (559)	1 (25)	6 (152)	23-3/8 (594)	27-1/2 (698)	6 (152)	6-1/8 (155)	8-15/32 (215)
256T	24 (610)	56 (1422)	51-3/4 (1314)	16-1/2 (419)	21-1/2 (546)	44 (1118)	22 (559)	1 (25)	6 (152)	23-3/8 (594)	27-1/2 (698)	6 (152)	6-1/8 (155)	8-15/32 (215)
284T	24 (610)	56 (1422)	52-11/16 (1338)	16-1/2 (419)	21-1/2 (546)	44 (1118)	22 (559)	1 (25)	6 (152)	24-1/2 (622)	27-1/2 (698)	6 (152)	6-1/8 (155)	8-15/32 (215)
286T	24 (610)	56 (1422)	54-3/16 (1376)	16-1/2 (419)	21-1/2 (546)	44 (1118)	22 (559)	1 (25)	6 (152)	24-1/2 (622)	27-1/2 (698)	6 (152)	6-1/8 (155)	8-15/32 (215)
324T	24 (610)	56 (1422)	56-1/4 (1429)	16-1/2 (419)	21-1/2 (546)	44 (1118)	22 (559)	1 (25)	6 (152)	25-5/8 (651)	27-1/2 (698)	6 (152)	6-1/8 (155)	8-15/32 (215)
326T	24 (610)	56 (1422)	57-3/4 (1467)	16-1/2 (419)	21-1/2 (546)	44 (1118)	22 (559)	1 (25)	6 (152)	25-5/8 (651)	27-1/2 (698)	6 (152)	6-1/8 (155)	8-15/32 (215)
☆ 364T	24 (610)	56 (1422)	59-15/16 (1522)	16-1/2 (419)	21-1/2 (546)	44 (1118)	22 (559)	1 (25)	6 (152)	26-3/4 (679)	27-1/2 (698)	6 (152)	6-1/8 (155)	8-15/32 (215)

Dimensions are subject to change. Not to be used for construction purposes unless certified.

EXCEPT AS OTHERWISE PROVIDED BY CONTRACT THIS DRAWING AND SPECIFICATIONS SHALL NOT BE REPRODUCED, COPIED OR USED AS THE BASIS FOR MANUFACTURE OR SALE OF MATTER DEPICTED HEREIN WITHOUT THE EXPRESSED WRITTEN PERMISSION OF THE CLAUDE LAVAL CORPORATION, OR ITS ASSIGNEES.

THIS DRAWING HAS BEEN GENERATED AND IS MAINTAINED BY A CAD SYSTEM. CHANGES SHALL ONLY BE INCORPORATED AS DIRECTED BY AN APPROVED ENGINEERING CHANGE ORDER (ECO).
PAPER COPIES ARE UNCONTROLLED.

REVISIONS

ZONE	REV.	DESCRIPTION	DATE	APPROVED
-	A	MFG UPDATE	6/16/2006	RGM
-	B	LOWERED INLET/OUTLET	8/27/2007	DLW
-	C	REVISED MOTOR MOUNT & NEW STY STRANER	7/12/2012	SUB
-	D	REPLACE PUMP AND SKID	1/15/13	TRR

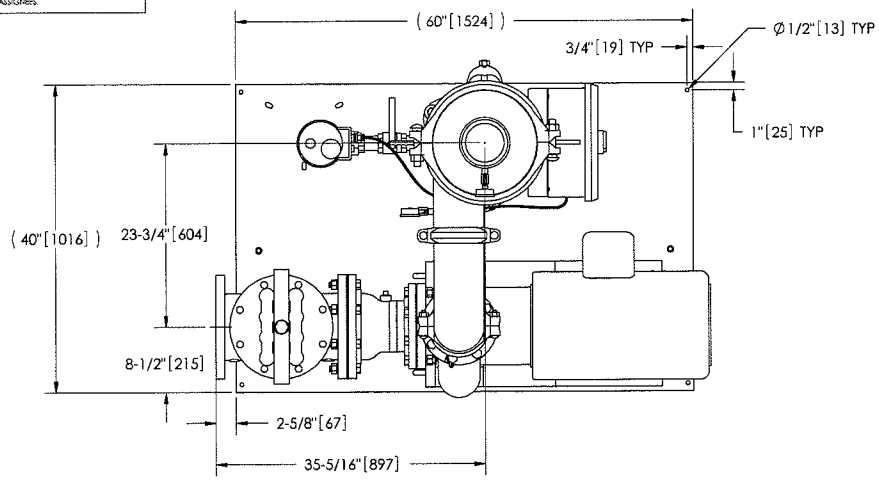

TOP VIEW

NOTES:

1. INLET IS 8" PIPE (125# ANSI FLANGED).
2. OUTLET IS 6" PIPE (GROOVED).
3. PURGE OUTLET IS 1-1/2" PIPE.
4. MAXIMUM PRESSURE: 150 psi (10.3 bar).
5. MAXIMUM TEMPERATURE: 100°F (37.8°C).
6. SPECIFIED FLOWRATE OF 825 gpm (187 m³/hr).
7. FINISH: AS ASSEMBLED.
8. POWER REQUIREMENT: 460V, 3PH, 60Hz.
9. NEMA 4X MOTOR STARTER ENCLOSURE WITH SAFETY DISCONNECT AND H.O.A. SWITCH.
10. APPROXIMATE DRY WEIGHT: 2528 lbs (1147 kg).
11. INLET/OUTLET VALVE KIT, MODEL TCV-0825 RECOMMENDED.
12. MINIMUM PIPE FROM TOWER BASIN TO TC SYSTEM IS 8" PIPE.
13. FLOODED SUCTION REQUIRED.

COMPONENT LIST:

1. ELECTRICAL CONTROL BOX 460V 60Hz W/120V TRANSFORMER.
2. SEPARATOR: HTX-0450-TC.
3. PUMP: 30 HP CENTRIFUGAL, 1800 rpm, 460V, 60Hz.
4. INLET/OUTLET PRESSURE GAUGES: 0-100 psi, GLYCERIN-FILLED.
5. PURGE EQUIPMENT: ABV-15-120V.
6. BASKET STRAINER.

SUBMITTAL DRAWING

This drawing is submitted for spatial consideration only. Do not pre-plumb to these dimensions.

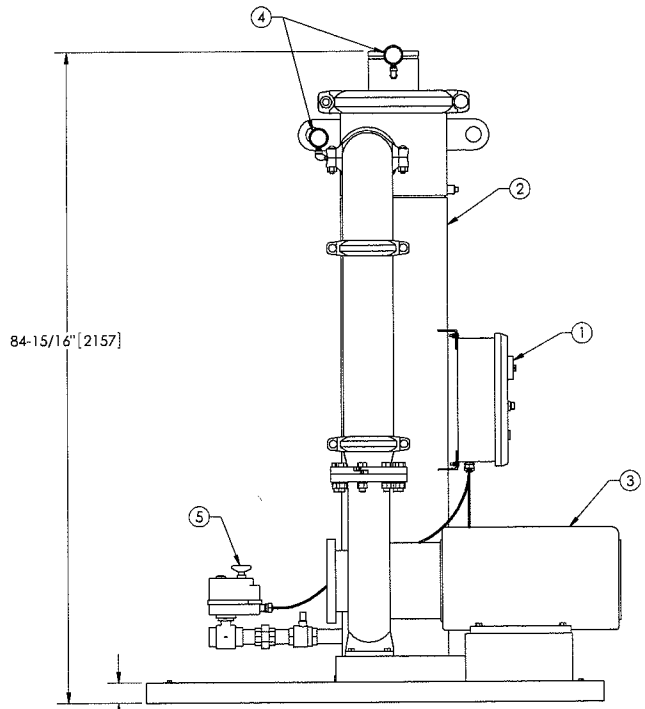

FRONT VIEW W/O STRAINER

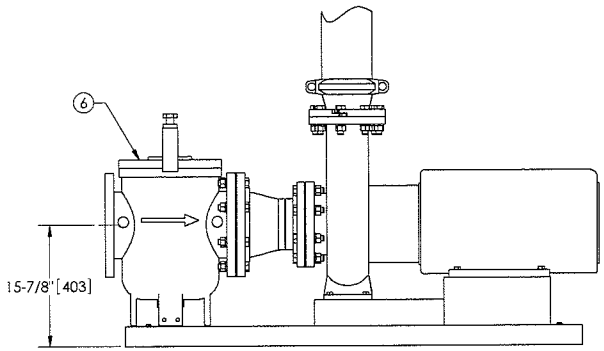

FRONT VIEW PUMP & STRAINER

UNLESS OTHERWISE SPECIFIED: DIMENSIONS ARE IN: INCHES [mm]
TOLERANCES ARE:
FRACTIONS ± 1/2" DECIMALS XX ± .01 XXX ± .005 XXXX ± .0005 ANGLES ± 1/4°
DO NOT SCALE DRAWING
MATERIAL: PER LAKOS SPEC
FINISH: AS ASSEMBLED

ENGINEERED FOR: STANDARD

APPROVALS		DATE
DRAWN	ADJ/DLW	5/5/05
ENGR	DLW	8/27/07
MFG	-	-
WORK ORDER		QTY

LAKOS. CLAUDE LAVAL CORP. FRESNO, CALIFORNIA 93727 WWW.LAKOS.COM — LAVAL UNDERGROUND SURVEYS

TITLE: TCX-0825-ABV, TC SYSTEM, SWEEPER HTX-0450, 460V 60HZ DELUXE

SIZE C | MODEL NO | DWG NO 122734 | REV D
SCALE 1:12 | EST WT 2528 lb | SHEET 1 OF 1

DWG NO. 122734 SH 1 REV D