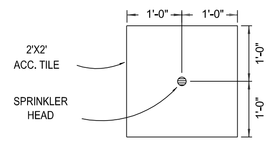

1 CENTER LINE OF TILE DETAIL
NOT TO SCALE

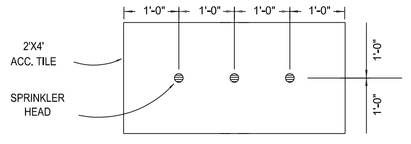

2 CENTER LINE OF TILE DETAIL
NOT TO SCALE

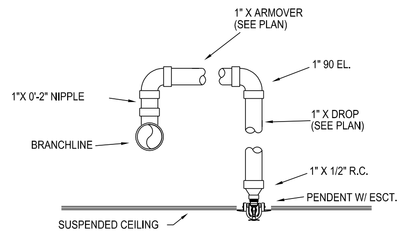

3 RETURN BEND DETAIL
NOT TO SCALE

FIRE PROTECTION NOTES:

1. ALL PIPE, DEVICES, AND INSTALLATION TO COMPLY WITH NFPA #13, UL & FM GLOBAL, THE DEPARTMENT OF VETERANS AFFAIRS AND ALL STATE & LOCAL APPROVING AUTHORITIES. USE ONLY USA DOMESTIC ORIGIN AND MANUFACTURED MATERIALS. NO FOREIGN MATERIALS ALLOWED.
2. REFER TO ARCHITECTURAL DRAWINGS FOR AREAS TO BE RENOVATED.
3. PROVIDE MODIFICATIONS TO THE EXISTING FIRE SPRINKLER SYSTEM TO ACCOMMODATE RENOVATIONS TO THE SPACE. PROVIDE NEW SPRINKLERS, PIPES, FITTINGS, HANGERS, ETC. AS REQUIRED. SPRINKLER COVERAGE NOT TO EXCEED 225 SQUARE FEET PER HEAD FOR LIGHT HAZARD, OR 130 SQUARE FEET PER HEAD FOR ORDINARY HAZARD, FOR ALL AREAS TO BE RENOVATED.
4. IT IS THE RESPONSIBILITY OF THE FIRE PROTECTION CONTRACTOR TO VERIFY EQUIPMENT SELECTIONS, PIPE ROUTING, ETC. FOR CODE COMPLIANCE, INSURER COMPLIANCE, AND ARCHITECTURAL/STRUCTURAL CONFORMITY. CONTRACTOR SHOULD THOROUGHLY SURVEY THE PROPERTY AND REVIEW ARCHITECTURAL, STRUCTURAL, MECHANICAL, PLUMBING AND ELECTRICAL CONDITIONS, EXISTING OR PLANNED, PRIOR TO BID. REFER TO PROJECT SPECIFICATIONS FOR ADDITIONAL REQUIREMENTS.
5. FIRE PROTECTION SYSTEM SHOP DRAWINGS SHALL INCLUDE COMPLETE REFLECTED CEILING PLANS INDICATING LOCATION OF EACH SPRINKLER HEAD, AS WELL AS PIPING LAYOUTS. PROVIDE ADDITIONAL SPRINKLER HEADS (OVER CODE MINIMUM QUANTITIES) IF REQUESTED BY ARCHITECT, TO OBTAIN SYMMETRICAL CEILING LAYOUTS.
6. SPECIAL CONSIDERATION SHALL BE GIVEN TO AREAS THROUGHOUT THE RENOVATED AREA SUCH AS DROPPED SOFFITS AND LIGHTING SOFFITS THAT NECESSITATE ADDITIONAL SPRINKLER HEADS. REFER TO ARCHITECTURAL DRAWINGS FOR BUILDING DETAILS.
7. THE GENERAL CONTRACTOR SHALL CONDUCT A COORDINATION MEETING WITH SUBCONTRACTORS TO ESTABLISH CLEARANCE REQUIREMENTS NEEDED FOR MECHANICAL, PLUMBING AND ELECTRICAL WORK PRIOR TO FABRICATION OF SPRINKLER SYSTEM. ANY RELOCATION OF FIRE SPRINKLER SYSTEM REQUIRED FOR PROPER INSTALLATION OF M.E.P. SYSTEMS SHALL BE AT THE FIRE SPRINKLER CONTRACTOR'S EXPENSE.
8. THE SPRINKLER CONTRACTOR SHALL BASE BID ON CAREFUL COORDINATION OF THE MECHANICAL, PIPING, ELECTRICAL AND STRUCTURAL SYSTEMS IN THE BUILDING.
9. ALL TRAPPED PIPING SECTIONS TO BE DRAINABLE. PIPING DRAINS TO BE IN COMPLIANCE WITH NFPA 13.
10. ALL NEW SPRINKLER BRANCH LINE PIPING OUTSIDE OF THE MRI ROOM SHALL BE BLACK SCHEDULE 40. ALL NEW SPRINKLER BRANCH LINE FITTINGS OUTSIDE OF THE MRI ROOM SHALL BE STANDARD "BLACK" GRADE CAST IRON. ALL NEW SPRINKLER BRANCH LINE PIPING AND FITTINGS WITHIN THE MRI SCANNING ROOM SHALL BE CPVC.
11. ALL NEW SPRINKLER MAIN PIPING OUTSIDE OF THE MRI ROOM SHALL BE SCHEDULE 10 WITH ROLL GROOVED AND WELDED OUTLETS WITH NEW STANDARD ROLL GROOVED FITTINGS AND COUPLINGS. ALL NEW SPRINKLER MAIN PIPING AND FITTINGS WITHIN THE MRI SCANNING ROOM SHALL BE CPVC.
12. ALL SPRINKLER PIPING WITHIN THE RF SHIELD SHALL BE CPVC WITH CEMENTED (GLUED) JOINTS. STEEL SPRINKLER PIPE IS ONLY ACCEPTABLE FOR OUTSIDE OF THE RF SHIELD.
13. ALL COMPONENTS (PIPING, SPRINKLER HEADS, HANGERS, CONNECTORS, DUCTWORK, DIFFUSERS, ETC.) WITHIN THE RF SHIELD SHALL BE NON-FERROUS (I.E., CPVC, BRASS, COPPER, ALUMINUM AND 304 STAINLESS STEEL). CARBON STEEL PIPE AND FITTING ARE NOT ACCEPTABLE MATERIALS FOR USE WITHIN THE RF SHIELD.
14. SPRINKLER HEADS INSIDE THE MRI ROOM SHALL BE NON-FERROUS PENDENTS WITH NON-FERROUS ESCUTCHEON PLATES.
15. THE SPRINKLER SYSTEM SHUT DOWN PROCEDURE, AS DIRECTED BY THE OWNER, SHALL BE FOLLOWED. IN NO CASE SHALL THE SPRINKLER SYSTEM BE TURNED OFF DURING THE OVERNIGHT HOURS.
16. THE RE-USE OF EXISTING SPRINKLER SYSTEM COMPONENTS IS ACCEPTABLE, WITH THE EXCEPTION OF SPRINKLER HEADS.
17. EXISTING PIPE SIZES (AS PER NUMBER OF SPRINKLERS SUPPLIED PER PIPE SIZE) SHALL NOT BE EXCEEDED. NO MORE THAN ONE SPRINKLER SHALL BE SUPPLIED FROM AN EXISTING ½" SPRINKLER OUTLET. NO MORE THAN TWO SPRINKLERS SHALL BE SUPPLIED FROM AN EXISTING 1" SPRINKLER OUTLET.
18. IF NEW WALL LOCATIONS CREATE A SITUATION OF OVER SPACING FOR THE ADJACENT EXISTING NON-RENOVATED AREAS, REWORK EXISTING SPRINKLER COVERAGE IN NON-RENOVATED AREAS TO BRING THESE AREAS INTO COMPLIANCE WITH NFPA SPACING RULES FOR THE GIVEN OCCUPANCY HAZARDS.

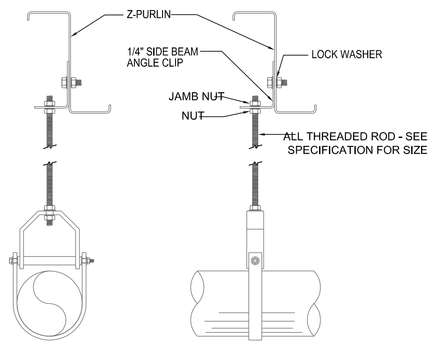

4 Z-PURLIN HANGER DETAIL
NOT TO SCALE

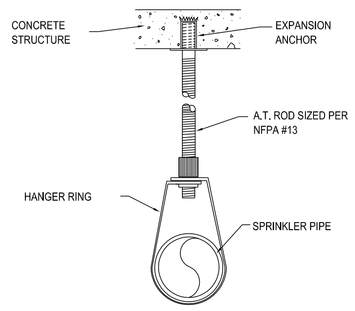

5 CONCRETE HANGER DETAIL
NOT TO SCALE

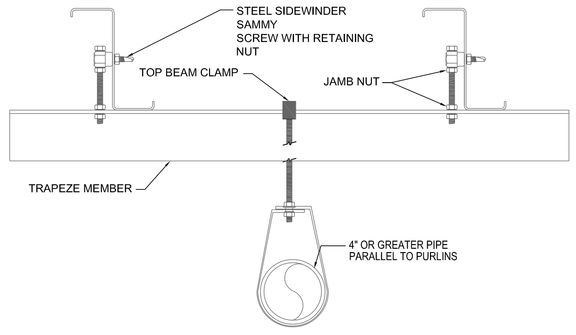

6 TRAPEZE HANGER DETAIL
NOT TO SCALE

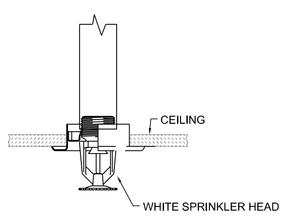

7 RECESSED SPRINKLER HEAD DETAIL
NOT TO SCALE

Progress Set	05/05/11
50% Schematic Design	01/24/11
Revisions:	Date

CONSULTANTS:

Structural Engineer:
Bob D. Campbell & Co.
4338 Belleview
Kansas City, MO 64111

MEP Engineer:
TME, Inc.
2039 N. Green Acres Road
Fayetteville, AR 72703

Associate Architect:
SPUR Design
One Santa Fe Plaza, Suite 101
Oklahoma City, OK 73102

Cost Estimating:
CMR
5201 Johnson Dr., Suite 330
Mission, KS 66205

ARCHITECT:

RAD RADIOLOGY PLANNING
RAD-Planning
802 Broadway 5th Floor
Kansas City, MO 64105
www.RAD-Planning.com 816.472.7722

TME, INC. No. 178 CORPORATE REGISTRATION ARKANSAS ENGINEER

Drawing Title: Fire Protection Notes and Details

Approved: Project Director

Project Title: SITE PREP FOR MAGNETIC RESONANCE IMAGING EQUIPMENT

Location: VETERANS HEALTHCARE SYSTEM OF THE OZARKS
1100 N. COLLEGE AVE, FAYETTEVILLE, AR 72703

Date: August 10, 2011 | Checked: H.H. | Drawn: G.S.

Project Number: 564-10-101

Building Number: 2

Drawing Number: F201

Office of Facilities Management

Department of Veterans Affairs

VA FORM 08-6231

Date: Fri, Apr 22, 2011
Time: 2:04:51 PM
File name: 10106 110422VAMC FAYETTEVILLE MRI.vwx