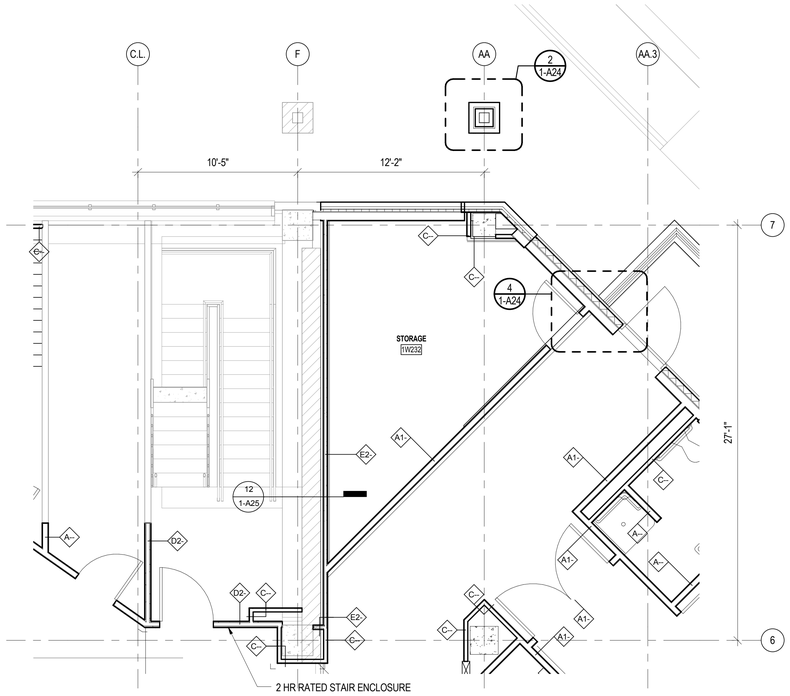

1 SOUTH ENTRANCE CONDITION
1/4" = 1'-0"

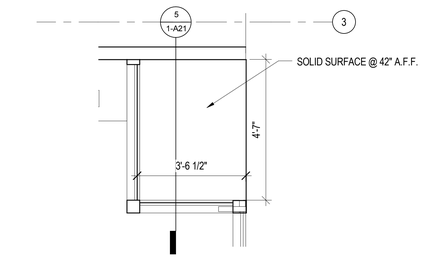

2 CR. CART ALCOVE CONDITION
1/2" = 1'-0"

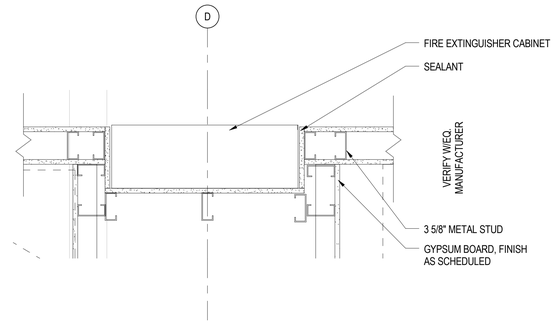

3 FIRE EXTINGUISHER RECESS PLAN
1 1/2" = 1'-0"

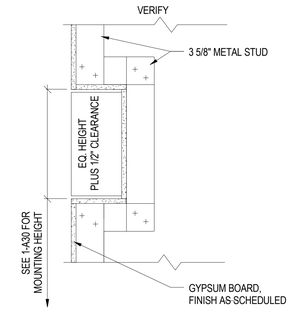

4 FIRE EXTINGUISHER RECESS SECTION
1 1/2" = 1'-0"

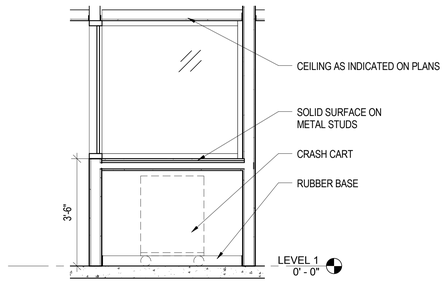

5 SECTION THROUGH CRASH CART ALCOVE
1/2" = 1'-0"

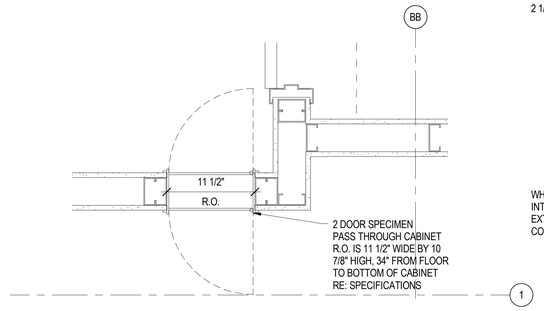

6 SPECIMEN PASS THROUGH DETAIL
1 1/2" = 1'-0"

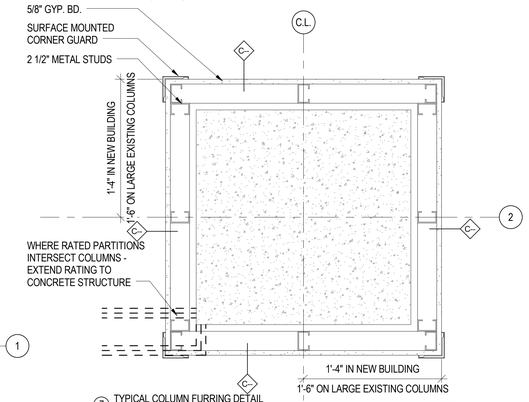

7 TYPICAL COLUMN FURRING DETAIL
1 1/2" = 1'-0"

Revisions	Date	Revisions	Date	Revisions	Date

HEERY design

Heery International Inc.
125 South Dubuque Street,
Suite 500,
Iowa City, IA 52240-4003
319.354.4700

project number
11-25503

Drawing Title
ENLARGED PLANS AND INTERIOR DETAILS

CONSTRUCTION DOCUMENTS

Project Title
EXPAND BLDG. 1 FOR PACT AMBULATORY CARE, RADIOLOGY

Building No. BLDG 1
Checked NWV
Drawn RD
Location ICVA HEALTH CARE SYSTEM

Date 12/15/2014
Project No. 636-201
DRAWING NO. 1-A21

Office of Facilities
Department of Veterans Affairs

VA FORM 08-6231, FEB. 1983