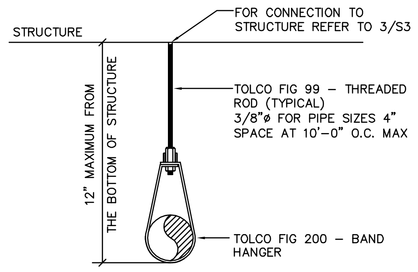

PIPE HANGER DETAIL

NOT TO SCALE | 10

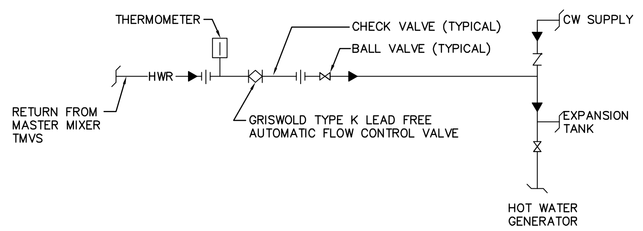

HWR FLOW CONTROL VALVE ASSEMBLY

NOT TO SCALE | 11

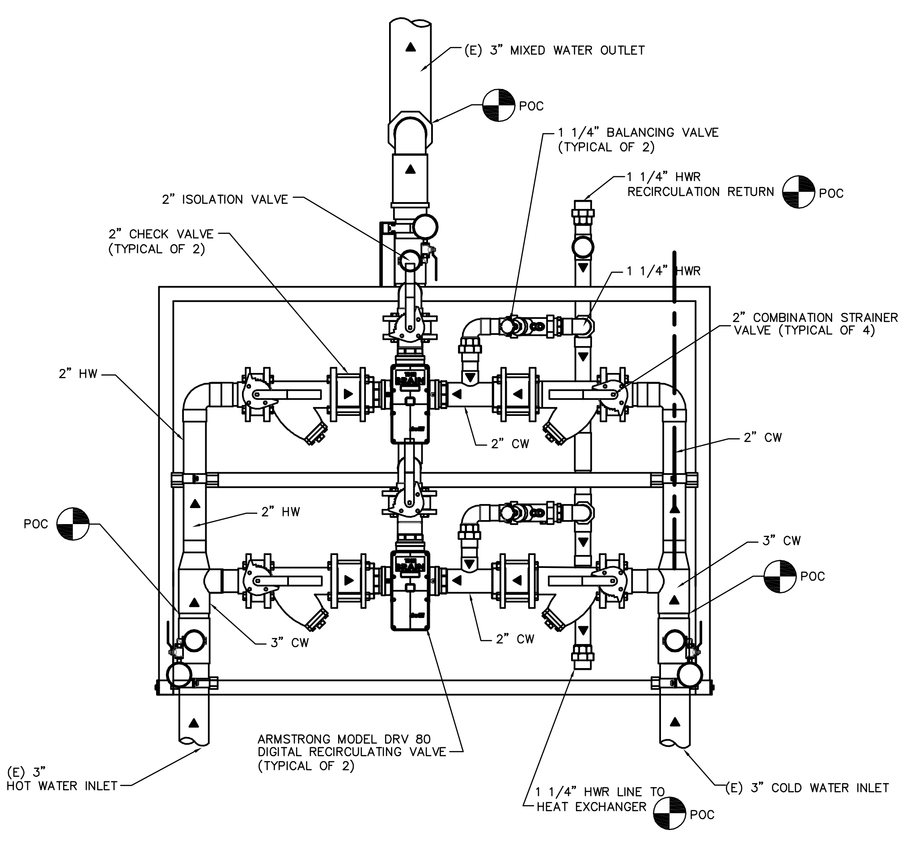

NOTES:

1) CONNECT DRV 80 TO BRAIN SCAN CONTROL MODULE AND DIRECT ONWARD CONNECTION TO BUILDING AUTOMATION SYSTEM.

2) CONTRACTOR TO VERIFY THE SIZE (INLET AND OUTLET) OF THE DRV BEFORE START OF INSTALLATION WORK. MAKE NECESSARY ADJUSTMENT AS REQUIRED.

DIGITAL RECIRCULATING VALVE DETAIL

NOT TO SCALE | 12

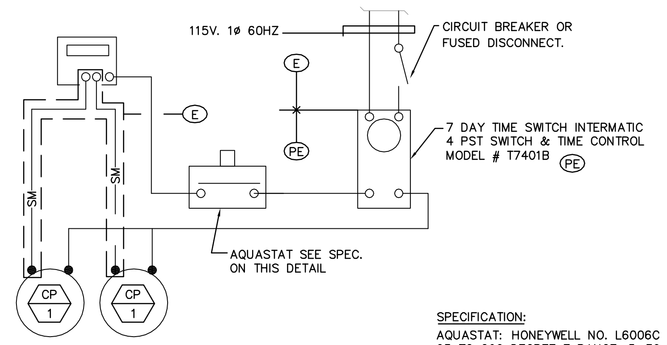

SPECIFICATION:

AQUASTAT: HONEYWELL NO. L6006C 65 TO 200 DEGREE F RANGE, 5–30 DEGREE F ADJUSTABLE DIFFERENTIAL

(P) FURNISHED BY PLUMBER INSTALLED BY PLUMBER

(E) FURNISHED AND INTALLED BY ELECTRICAL CONTRACTOR.

PUMP START/STOP AQUASTAT SETTINGS (DEGREE F):

PUMP #:	START	STOP
(2) CP–1	105	110

CLINICAL USE CP-1 WIRING DIAGRAM (TMVS 1 + 2)

NOT TO SCALE | 7

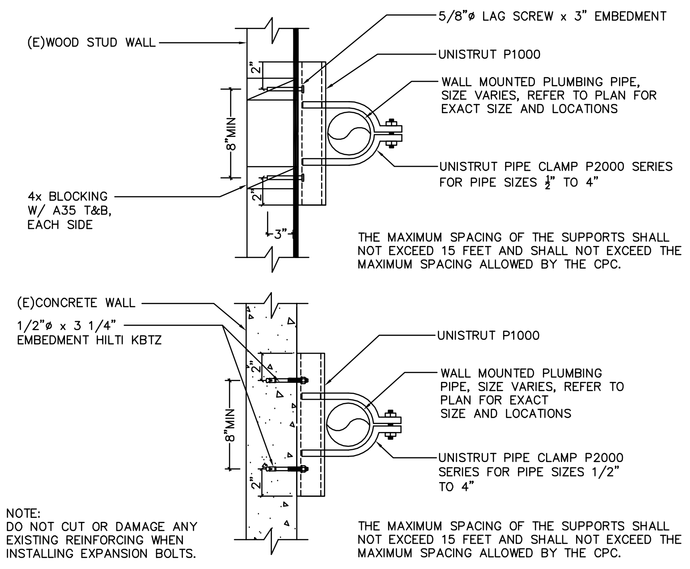

PIPE WALL SUPPORT - CONCRETE OR WOOD

NOT TO SCALE | 8

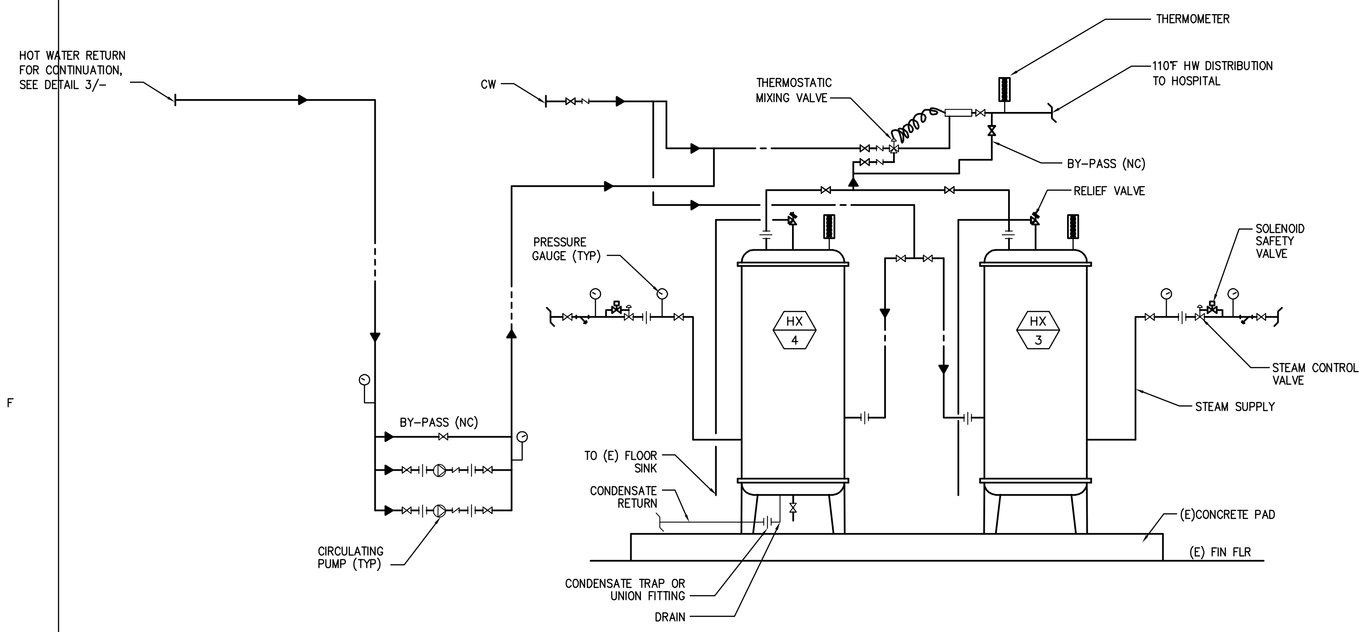

HEAT EXCHANGER DETAIL - BLDG 126

NOT TO SCALE | 1

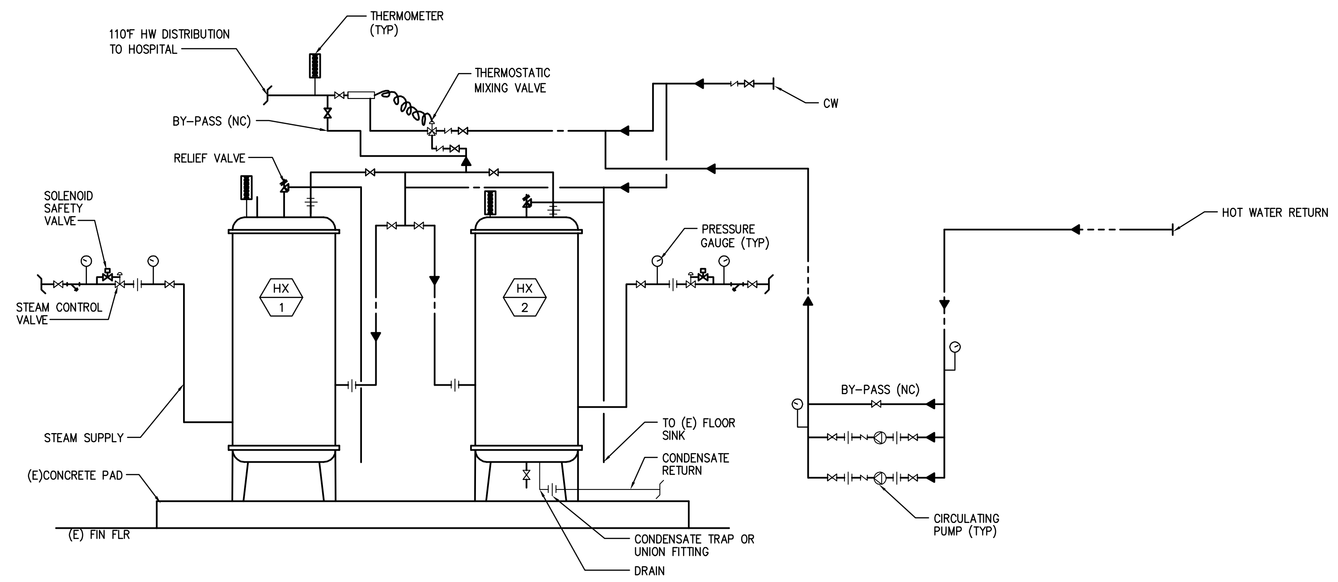

HEAT EXCHANGER DETAIL - BLDG 150

NOT TO SCALE | 2

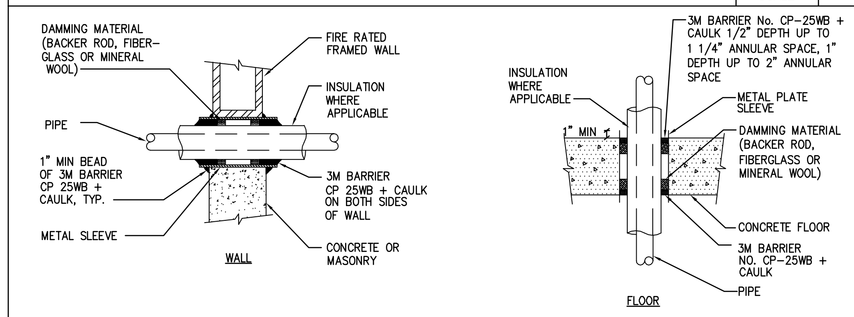

SPECIFICATIONS:

PENETRATIONS IN FIRE RESTRICTIVE WALLS, PARTITIONS AND FLOORS WHERE PROTECTED OPENINGS ARE REQUIRED SHALL BE FIRE STOPPED USING APPROVED MATERIALS, SECURELY INSTALLED AND CAPABLE OF MAINTAINING THIER INTEGRITY AND PREVENTING THE MOVEMENT OF FLAMES AND/OR GASES THROUGH THE VOID SPACES BETWEEN PENETRATING MATERIALS AND WALLS, PARTITIONS AND FLOORS WHEN TESTED IN ACCORDANCE WITH ASTM STANDARD E–814 OR UL STANDARD 1479 (CBC SECTIONS 709.6, 709.7 & 714).

PROVIDE DESIGN DETAILS ON DRAWINGS DEPICTING APPROVED (LISTED) METHODS AND MATERIALS USED TO PROTECT PENETRATIONS WALLS, PARTITIONS AND FLOORS.

DESIGNS ARE LISTED BY UNDERWRITER'S LABORATORIES (FIRE RESISTANCE DIRECTORY) AND THE CALIFORNIA STATE FIRE MARSHAL (BUILDING MATERIAL LISTINGS). SPECIFIC DESIGN INFORMATION IS AVAILABLE FROM U.L OR THE PRODUCT MANUFACTURER.

NOTES:

PENETRATIONS SHALL HAVE A T & F RATING IF LOCATED IN OPEN FLOOR AREA, "F"ONLY REQUIRED IF CONTAINED WITHIN A WALL ASSEMBLY, CBC SEC. 710.2.3

3M FIRE BARRIER PRODUCTS: CALIFORNIA STATE FIRE MARSHAL LISTING No. 4485–941:100

UNINSULATED PIPE:
U.L. DESIGN No. CAJI001(CONC. WALL OR FLOOR)
U.L. DESIGN No. WL1001 (STUD WALL)

INSULATED PIPE:
U.L. DESIGN No. CAJI5000(CONC. WALL OR FLOOR)
U.L. DESIGN No. WL5001 (STUD WALL)

FIRESTOP ASSEMBLY FOR PIPE PENETRATIONS
(BOTH INSULATED & UN–INSULATED) (GENERAL F & T TO FIT RATING)

PIPE PENETRATION DETAIL

NOT TO SCALE | 9

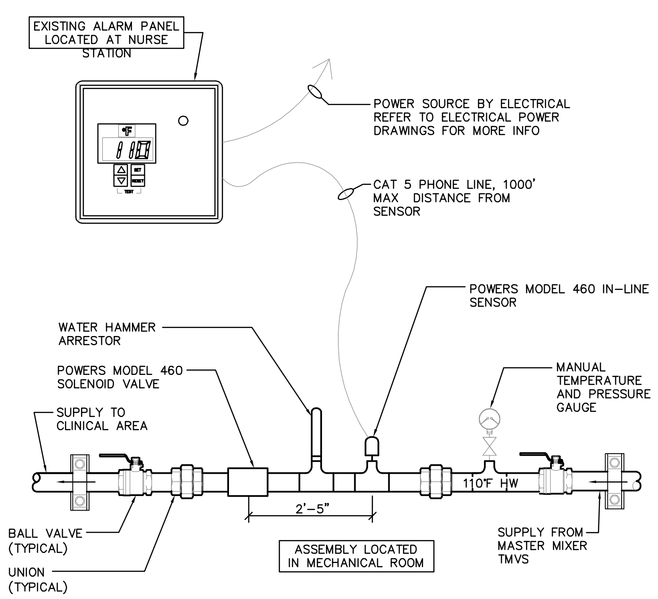

HW ALARM PANEL AND AUTO SHUT DOWN

NOT TO SCALE | 6

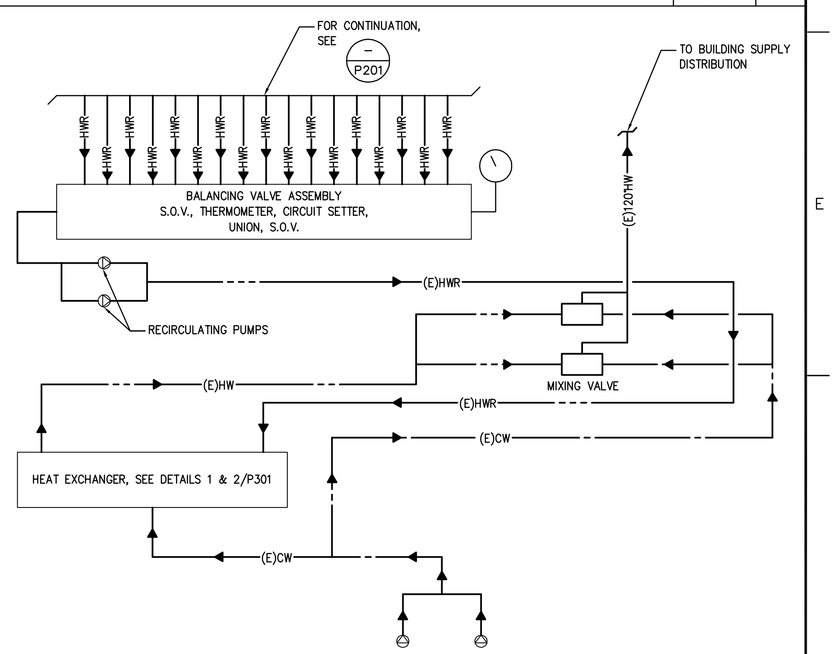

BALANCING VALVE ASSEMBLY

NOT TO SCALE | 3

Revisions	Date

ARCHITECT/ENGINEERS

Schwab Engineering & Management
A Certified SB/DVBE Firm
1000 E. Walnut Street, Suite 227, Pasadena, CA 91106
t: 888.900.3823 f: 626.463.2739 www.schwabeng.com
Project No.: 0213.034.00

REGISTERED PROFESSIONAL ENGINEER MANOJ P. SHAH No. M25602 Exp. 9/30/16 MECHANICAL STATE OF CALIFORNIA

	DATE		DATE		DATE
DIRECTOR		CHIEF OF STAFF		CHIEF ENGINEER	
ASSOCIATE DIRECTOR		CHIEF, RESEARCH		ASSISTANT CHIEF ENGINEER	
ASSOCIATE DIRECTOR PCS/NE		SECURITY SURVEILLANCE COMMUNITY		SAFETY MANAGER	

Drawing Title: PLUMBING DETAILS

Approved Project Director

Project Title: BUILDING 126/150 REPLACE HOT WATER SYSTEM

Project Number: 600-13-101

Building Number: 126 / 150

Location: 5901 EAST SEVENTH ST. LONG BEACH, CA 90822

Date: JUNE 24, 2014 | Checked: TS | Drawn: HS

Drawing Number: P301

Dwg. 37 of 37

Office of Facilities Management

Department of Veterans Affairs

100% CONSTRUCTION DOCUMENTS

VA FORM 08–6231, OCT 1978