KEYED NOTES

1. 2x2 PANEL CEILING. SEE SPECIFICATIONS.
2. GYPSUM BOARD CEILING.
3. GYPSUM BOARD SOFFIT.
4. BOX AROUND WINDOW FOR LOWER CEILING. REFER TO DETAIL A/A-1.4.
5. CEILING MOUNT CURTAIN TRACK. REFER TO DETAIL G/A-1.4
6. BUILDING EXP. JOINT. SEE DETAILS ON SHEET A-2.1.
7. PATIENT LIFT PROVIDED BY VA AND INSTALLED BY CONTRACTOR. TOP OF TRACK FOR LIFT TO BE AT 7'-8" A.F.F.. SUPPORTED BY HANGERS.
8. PATIENT LIFT PROVIDED BY VA AND INSTALLED BY CONTRACTOR.

KEYED NOTES

9. MOUNT TELEMETRY MONITORS TO SIDE OF SOFFIT.
10. CONTROL JOINT USG #093 (2)

GENERAL NOTES

REFER TO MEP DRAWINGS FOR LIGHT FIXTURE DESIGNATIONS, DUCT WORK, GRILLS AND OTHER RELATED INFORMATION.

SEE ROOM FINISH SCHEDULE FOR SCHEDULED CEILING FINISH MATERIAL.

PROVIDE ACCESS PANELS IN ALL DRYWALL CEILINGS AS REQUIRED. PROVIDE FIRE RATING AS REQUIRED.

ALL SMOKE DETECTORS SHALL BE BAGGED WITHIN THE CONSTRUCTION AREA. THE BAGS SHALL BE REMOVED AT THE END OF EACH WORK DAY.

THE EXISTING EXIT SIGNS, NURSE CALL DOME LIGHTS, SECURITY CAMERAS, SECURITY SYSTEM AND FIRE ALARM SYSTEM SHALL BE MAINTAINED ON ACTIVE STATUS DURING CONSTRUCTION PERIOD.

REFER TO DETAIL B/A1.4 FOR BULKHEAD ABOVE WALL CABINETS. TYPICAL AT ALL LOCATIONS.

BOTTOM OF ALL SOFFITS ARE 8'-0" A.F.F. UNLESS OTHERWISE NOTED.

CEILING LEGEND

- AREA OF WORK
- ⅝" TYPE 'X' GYPSUM BOARD.
- EXPOSED UNDERSIDE OF EXIST'G CONC. DECK.
- 2 x 2 ACOUSTIC PANEL CEILING
- CEILING ACCESS PANELS – COORDINATE W/ ELECTRICAL & MECHANICAL CONTRACTORS.

FIRE AND SMOKE WALL LEGEND

- FIRE WALL-1HR
- FIRE WALL-2HR
- SMOKE WALL-1HR

REFERENCED

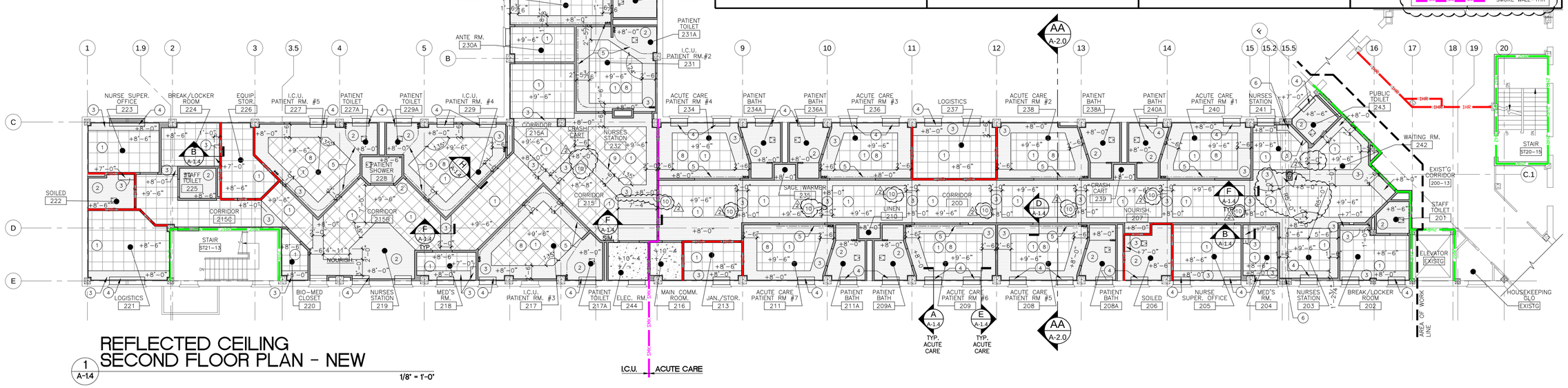

REFLECTED CEILING SECOND FLOOR PLAN - NEW

1 / A-1.4 — 1/8" = 1'-0"

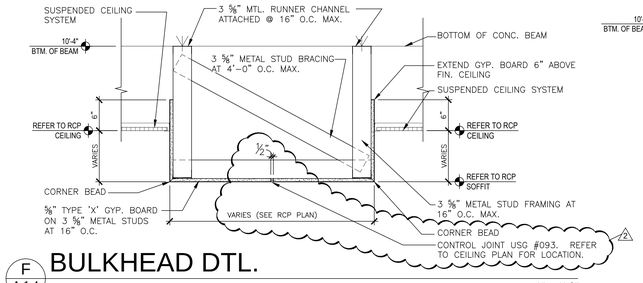

F / A-1.4 BULKHEAD DTL. — 1" = 1'-0"

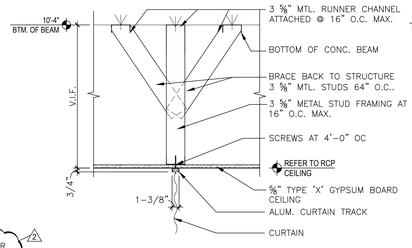

G / A-1.4 CURTAIN TRACK DTL. — 1" = 1'-0"

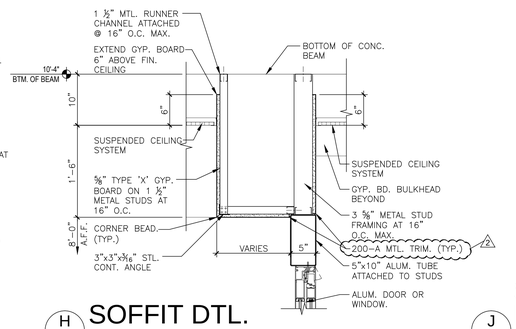

H / A-1.4 SOFFIT DTL. — 1" = 1'-0"

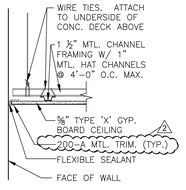

J / A-1.4 SUSP. GYP. BD. CLG. DTL. — 1" = 1'-0"

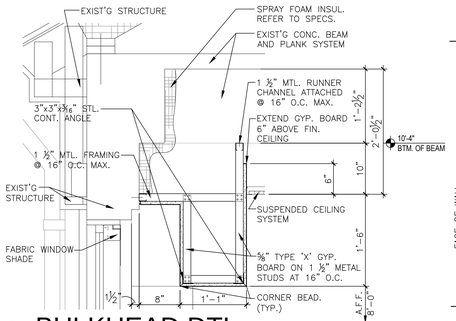

A / A-1.4 BULKHEAD DTL. — 1" = 1'-0"

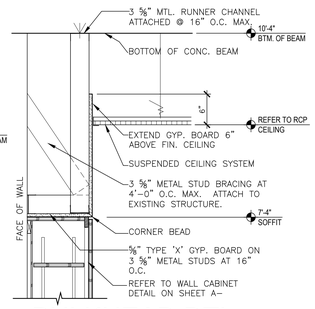

B / A-1.4 BULKHEAD DTL. — 1" = 1'-0"

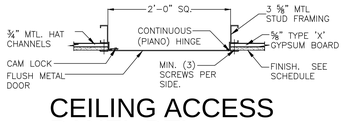

C / A-1.4 CEILING ACCESS PANEL DTL. — 1" = 1'-0"

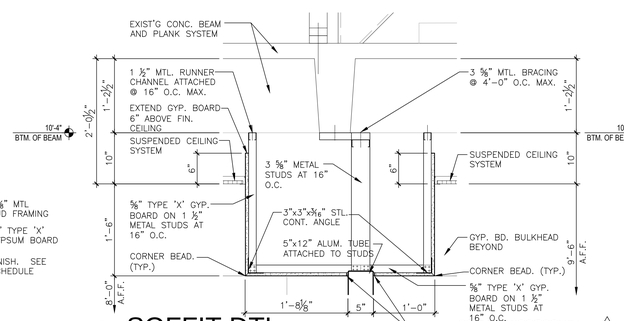

D / A-1.4 SOFFIT DTL. — 1" = 1'-0"

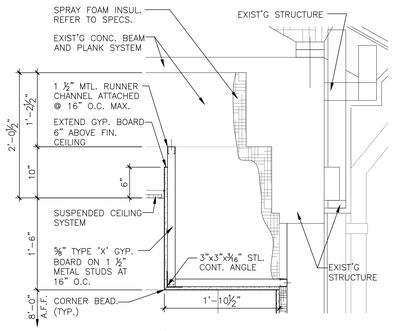

E / A-1.4 SOFFIT DTL. — 1" = 1'-0"

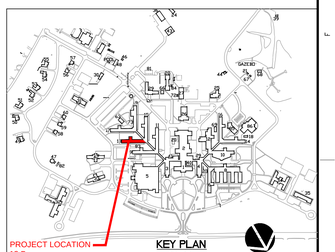

KEY PLAN N.T.S.

REFERENCED

CONSTRUCTION DOCUMENTS - 100% SUBMISSION

Revisions	Date
1 REVIEW REVISIONS	02/25/15
2 ADDENDUM ISSUE	03/19/15

ARCHITECT AND CONSULTANTS:

DEANE + STROLLO, LLC
718 Virginia Drive
Orlando, FL. 32803
T: (407) 423-5355 F: (407) 422-5994

MOSES & ASSOCIATES
2209 NW 40th Ter. Ste. A
Gainesville, FL. 32605
T: (352) 372-1911 F: (352) 372-0186

DEPARTMENT OF VETERAN AFFAIRS
ENGINEERING SERVICE
ENGINEERING PLANNING AND ANALYSIS

Approved:
- Engineering Asst. Chief
- Engineering Maint. And Oper.
- Engineering Equipment Manager
- Engineering Health & Safety
- Engineering Planning & Analysis
- C.O.R.

Drawing Title	SECOND FLOOR PLAN - REFLECTED CEILING
Project Title	RENOVATE 13B FOR ACUTE CARE AND INTENSIVE CARE UNIT
Approved: Chief, Engineering Service	–
Approved: Service Director	–
Building Number	13B
Checked	JS,KS
Drawn	GC
Location	1826 VETERANS BLVD. - DUBLIN, GA 31021
Date	JANUARY 30, 2015
Project No.	557-14-105
DRAWING NO.	A-1.4R
Dwg. 9 of 60	

Engineering Service

VA U.S. Department of Veterans Affairs

VA FORM 08-6231, DEC 1989