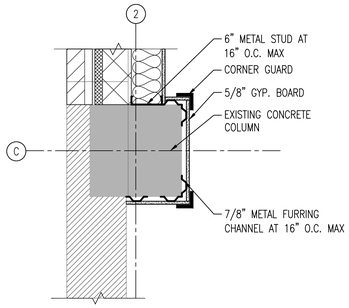

1 A506 COLUMN DETAIL AT 2 AND C
1" = 1'-0"

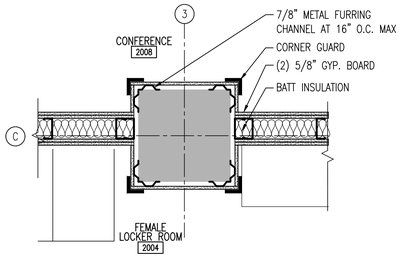

2 A506 COLUMN DETAIL AT 3 AND C
1" = 1'-0"

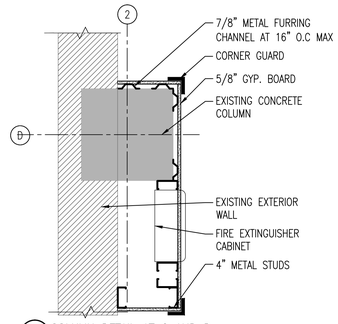

3 A506 COLUMN DETAIL AT 2 AND D
1" = 1'-0"

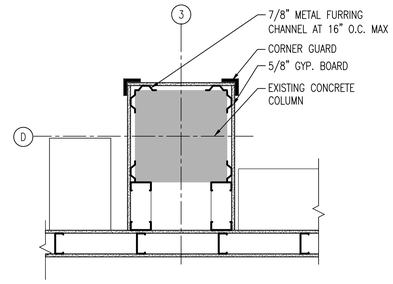

4 A506 COLUMN DETAIL AT 3 AND D
1" = 1'-0"

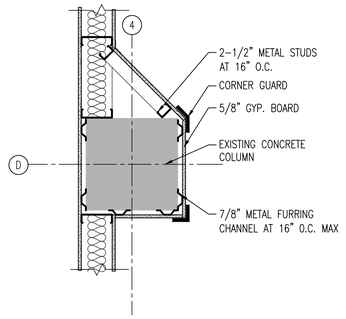

5 A506 COLUMN DETAIL AT 4 AND D
1" = 1'-0"

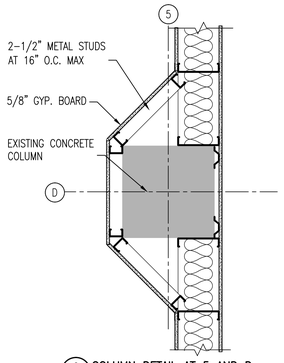

6 A506 COLUMN DETAIL AT 5 AND D
1" = 1'-0"

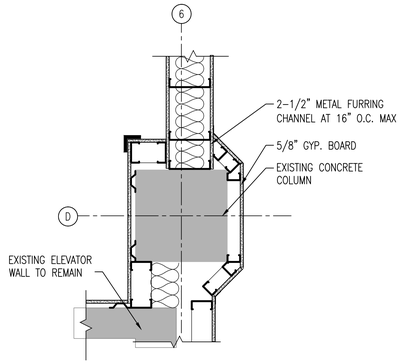

7 A506 COLUMN DETAIL AT 6 AND D
1" = 1'-0"

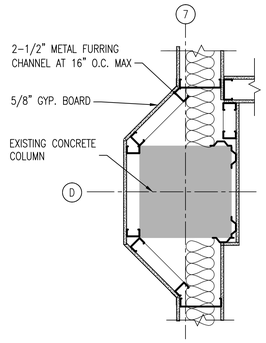

8 A506 COLUMN DETAIL AT 7 AND D
1" = 1'-0"

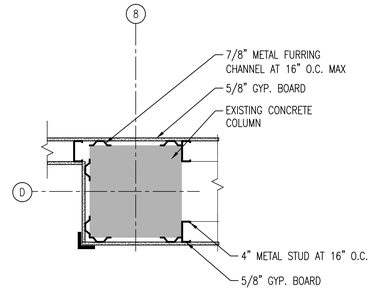

9 A506 COLUMN DETAIL AT 8 AND D
1" = 1'-0"

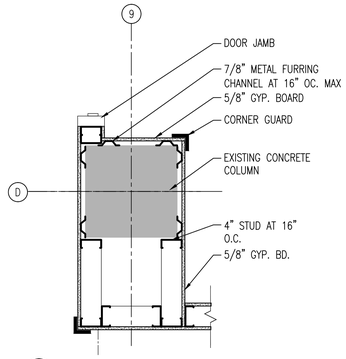

10 A506 COLUMN DETAIL AT 9 AND D
1" = 1'-0"

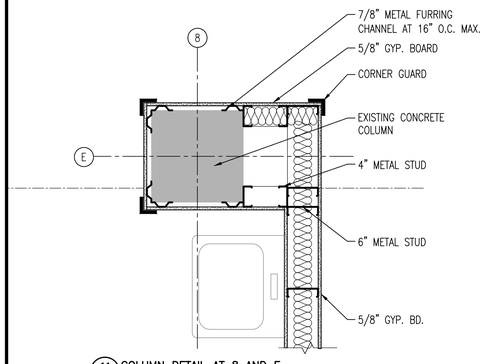

11 A506 COLUMN DETAIL AT 8 AND E
1" = 1'-0"

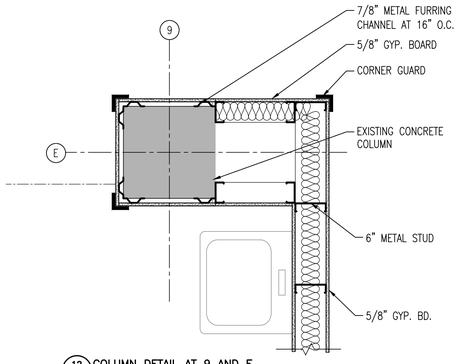

12 A506 COLUMN DETAIL AT 9 AND E
1" = 1'-0"

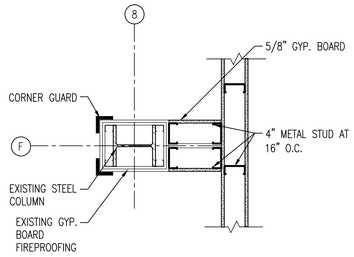

NOTE:
REPAIR SURFACE WHERE EXISTING PARTITION IS REMOVED

13 A506 COLUMN DETAIL AT 8 AND F
1" = 1'-0"

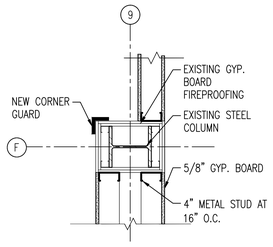

NOTE:
REPAIR SURFACE WHERE EXISTING PARTITION IS REMOVED

14 A506 COLUMN DETAIL AT 9 AND F
1" = 1'-0"

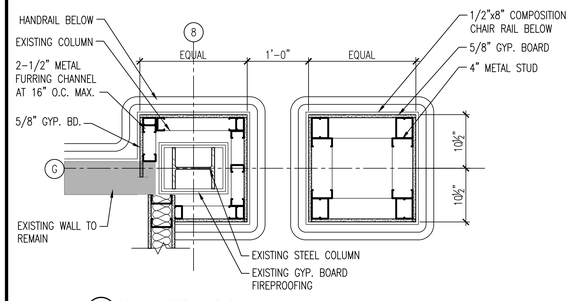

15 A506 COLUMN DETAIL AT 8 AND G
1" = 1'-0"

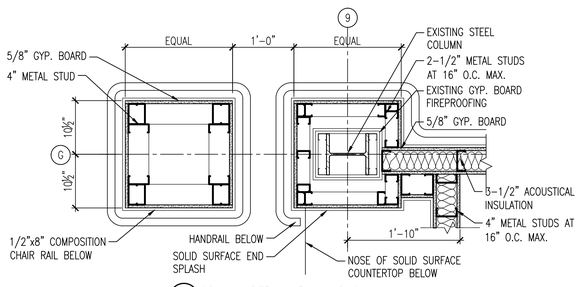

16 A506 COLUMN DETAIL AT 9 AND G
1" = 1'-0"

FINAL SUBMITTAL

Revisions:	Date

CONSULTANTS:

ALAN JACKSON TOLAND REGISTERED ARCHITECT 8509 NORTH CAROLINA ATLANTA, GEORGIA

ARCHITECT:

TOLAND MIZELL MOLNAR
435 Spence Drive
Salisbury, NC 28144
704.762.9652

Drawing Title: COLUMN PLAN SECTIONS-TYPICAL CONCRETE AND STEEL COLOUMNS

Approved: Project Director

Project Title: RENOVATE / EXPAND SURGICAL SUITE

Location: FAYETTEVILLE, NC

Date: 08-22-2014 | Checked: | Drawn:

Project Number: 565-13-105

Building Number: 1

Drawing Number: A506

Dwg. XX of

OFFICE OF CONSTRUCTION AND FACILITIES MANAGEMENT

Department of Veterans Affairs

VA FORM 08-6231