4 MH-304 VIEW 2
NOT TO SCALE

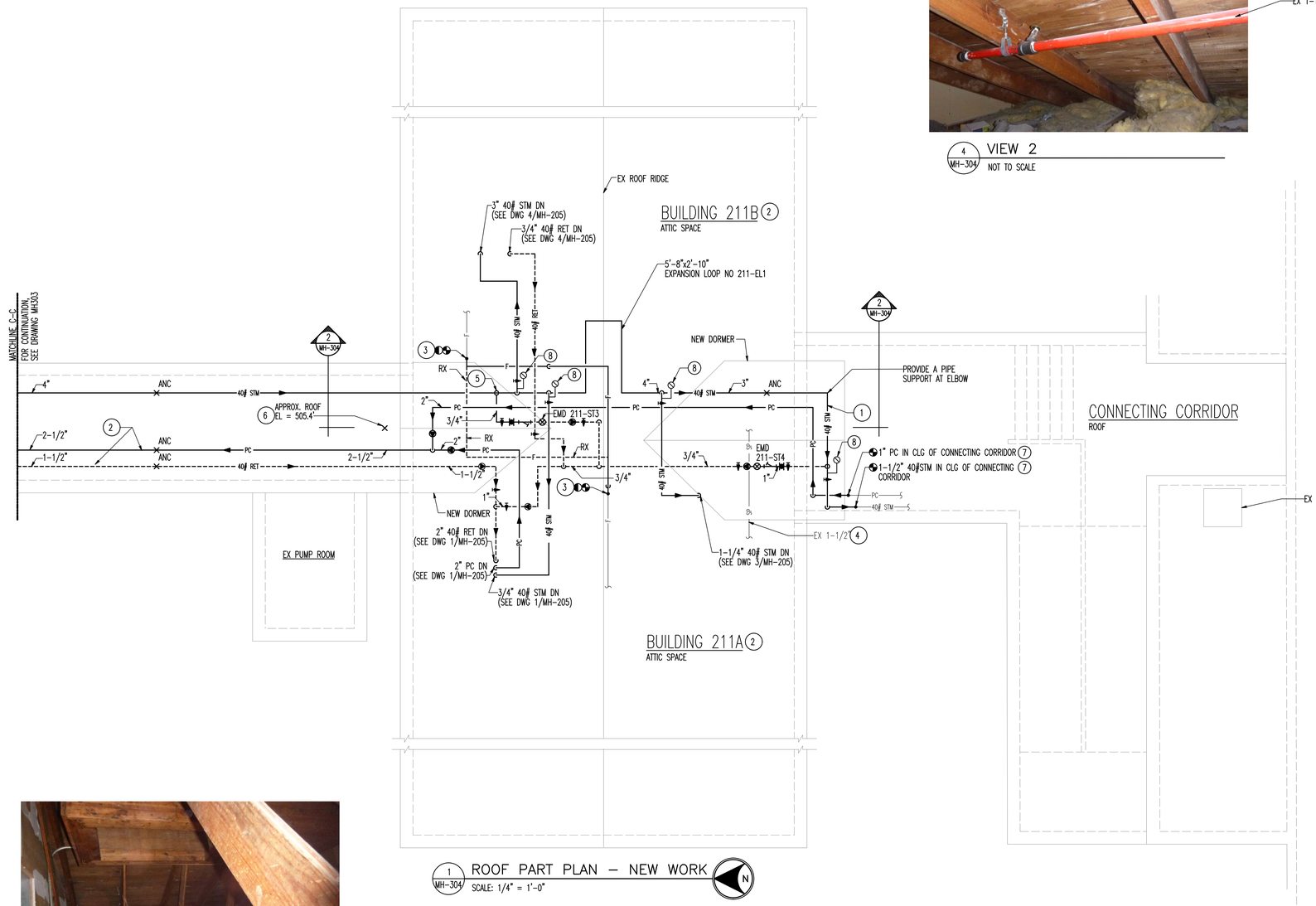

1 MH-304 ROOF PART PLAN – NEW WORK
SCALE: 1/4" = 1'-0"

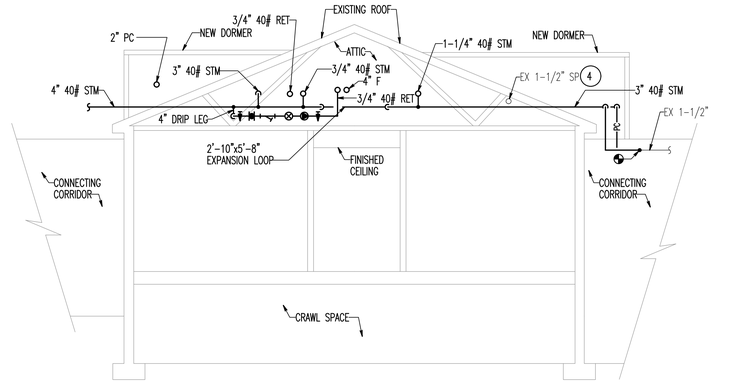

2 MH-304 BUILDING SECTION – BLDG 211
SCALE: 1/4" = 1'-0"

1/4" = 1' - 0" 0 2 4 8 12 FT

3 MH-304 VIEW 1
NOT TO SCALE

DRAWING NOTES
(APPLICABLE TO THIS DRAWING MH-304 ONLY)

1. INFORMATION SHOWN ON THIS DRAWING PERTAINING TO EXISTING CONDITIONS HAS BEEN OBTAINED FROM AVAILABLE BUILDING DRAWINGS OR GENERAL FIELD OBSERVATIONS AND MAY NOT INDICATE ACTUAL EXISTING CONDITIONS IN DETAIL OR DIMENSION. EXISTING CONDITIONS ARE SHOWN IN AN APPROXIMATE WAY ONLY. DRAWING IS DIAGRAMMATIC INTENDED TO CONVEY SCOPE OF WORK. THE CONTRACTOR IS RESPONSIBLE FOR DETERMINING THE ACTUAL EXISTING CONDITIONS PRIOR TO FABRICATION OR PERFORMANCE OF ANY WORK. SHOULD CONDITIONS BE DISCOVERED THAT PREVENT EXECUTION OF THE WORK AS INDICATED, THE CONTRACTOR SHALL IMMEDIATELY NOTIFY THE COR IN WRITING AND AWAIT DIRECTION BEFORE PROCEEDING WITH THE WORK.
2. UNLESS OTHERWISE INDICATED, EXISTING INDICATED IN LIGHT LINE WEIGHT (———).
3. UNLESS OTHERWISE INDICATED, NEW WORK INDICATED IN DARK SOLID LINE WEIGHT (———).
4. MODIFY EXISTING FIRE/SPRINKLER PIPING, AS REQUIRED, TO INSTALL NEW STEAM, STEAM RETURN, AND PUMP CONDENSATE PIPING AND SUPPORTS.
5. SEE EXPANSION LOOP SCHEDULE ON DWG 1/MH-502.
6. DO NOT CUT OR DAMAGE ANY WOOD JOISTS, TRUSSES, OR RAFTERS.
7. THE ROOF ELEVATIONS VARY FOR EACH BUILDING AND CONNECTING CORRIDOR. THE HIGHEST ELEVATION IS AT BUILDING 203 (507.0') AND THE LOWEST ELEVATION IS AT BUILDING 211 (505.4'). ADJUST PIPE SUPPORT HEIGHTS TO MAINTAIN REQUIRED SLOPE UTILIZING THE NATURAL ELEVATION CHANGE IN THE ROOFS TO ASSIST IN SLOPE.

SPECIAL NOTES
(APPLICABLE TO THIS DWG MH-304 ONLY)

1. PIPE SUPPORT SHALL PROVIDE MINIMAL RESISTANCE TO PIPE MOVEMENT. USE SLIDE PLATES OR HANGER RODS.
2. HEAT TRACE PC AND 40# RET PIPE BETWEEN DORMER AT BLDG 209 AND DORMER AT BLDG 211. HEAT TRACE PC AND 40# RET, INCLUDING END OF MAINS AND DRIP LEGS, IN BLDG 211 ATTIC SPACE. SEE DRAWING ES-101 FOR DETAILS.
3. REMOVE EXISTING 4" F BETWEEN THESE TWO POINTS AND PROVIDE NEW 4" F RE-ROUTED AS SHOWN. COORDINATE WITH NEW STEAM, STEAM RETURN, AND PUMP CONDENSATE PIPES AND SUPPORTS.
4. COORDINATE EXISTING 1-1/2" SP WITH NEW 3" 40# STM, 1" 40# RET, AND 2" PC.
5. REMOVE AN EXISTING PORTION OF THE ORIGINAL CEILING ATTACHED TO THE BOTTOM OF THE EXISTING ROOF TRUSSES TO INSTALL DRIP LEG. ORIGINAL CEILING IS NOT A FIRE SPARATION.
6. CONTRACTOR SHALL FIELD VERIFY.
7. COPORDINATE INSTALLATION OF NEW PIPING WITH PARTIAL REMOVAL OF EXISTING PIPING TO MINIMIZE DOWNTIME OF SERVICE TO BUILDING 213. SEE DRAWING1/MD-104.
8. PRESSURE GAUGE.

STEAM LINE DRIP TRAP

UNIT NO	LOCATION	SYSTEM	CAPACITY AT MINIMUM DIFFERENTIAL PRESSURE (LBS/HR)	MINIMUM DIFFERENTIAL PRESSURE (PSI)	TRAP TYPE	TRAP SIZE (IN)	NOTES
211-ST3	BLDG 211 ATTIC	40# RETURN	75	32	INV. BUCKET	3/4	
213-ST1	BLDG 213 ATTIC	40# RETURN	35	32	INV. BUCKET	3/4	

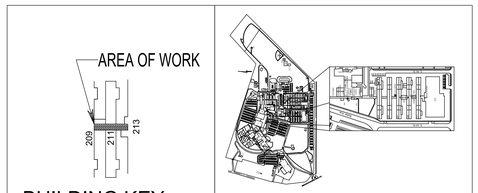

BID SUBMISSION

Revisions	Date

CONSULTANTS

HENRY ADAMS
Consulting Engineers
MECHANICAL ELECTRICAL & PLUMBING ENGINEERS
MECHANICAL, PLUMBING, ELECTRICAL
HENRY ADAMS
600 BALTIMORE AVENUE
BALTIMORE, MD 21204

STRUCTURAL, CIVIL, COST ESTIMATING
ALPHA CORPORATION
1800 WASHINGTON BOULEVARD
SUITE 425
BALTIMORE, MD 21230

KOFFEL ASSOCIATES
Fire Protection ENGINEERS
FIRE PROTECTION
KOFFEL ASSOCIATES, INC.
8815 CENTRE PARK DRIVE
SUITE 200
COLUMBIA, MD 21045-2107

DONALD F. STEINER No. 16124 STATE OF MARYLAND PROFESSIONAL ENGINEER
3/12/15

ARCHITECTS

EBA TM
ERNEST BLAND ASSOCIATES, P.C.
TECHNICAL FACILITIES DESIGN
802 SLIGO AVENUE, SILVER SPRING, MARYLAND 20910
TELEPHONE (301) 589-4811 FAX (301) 589-3810

Drawing Title: BUILDING NO. 211 ROOF PART PLAN - NEW WORK

Approved: Project Director

Project Title: MARTINSBURG TASK 7 STEAM UPGRADE FOR 200 ROW

Location: VAMC MARTINSBURG, WV

Date: MARCH 13, 2015 | Checked: DFS | Drawn: MEH

Project Number: 613-12-106
Building Number: 200 Row
Drawing Number: MH 304

Department of Veterans Affairs

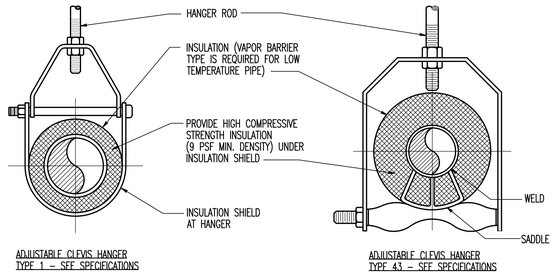

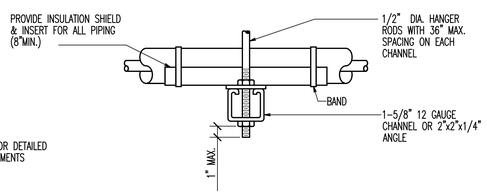

NOTES:
SEE SPECIFER FOR DETAILED HANGER REQUIREMENTS

SIDE VIEW TRAPEZE HANGER FOR UP TO 100 LB UNIFORM LOAD

MAXIMUM PIPE/TUBING SUPPORT SPACING																		
NOM. SIZE IN.	THRU 3/4	1	1 1/4	1 1/2	2	2 1/2	3	4	5	6	8	10	12	14	16	18	20	24
PIPE FT.	7	7	7	9	10	11	12	14	16	17	19	22	23	25	27	28	30	32
TUBING FT.	5	6	7	8	8	9	10	12	13	14	16	–	–	–	–	–	–	–
NOTE: FOR TRAPEZE HANGER TAKE SPACING OF SMALLEST SIZE ON TRAPEZE.																		

1 MH501 PIPE HANGERS
NOT TO SCALE

PIPE ANCHOR SCHEDULE					
D	P	C	N	S	BOLT PATTERN
4"	5/8"	3/4"	4"	3/4"	
3"	1/2"	1/2"	4"	5/8"	
2 1/2"	3/8"	3/8"	4"	5/8"	
2"	3/8"	3/8"	4"	5/8"	
1-1/2"	3/8"	1/4"	4"	1/2"	

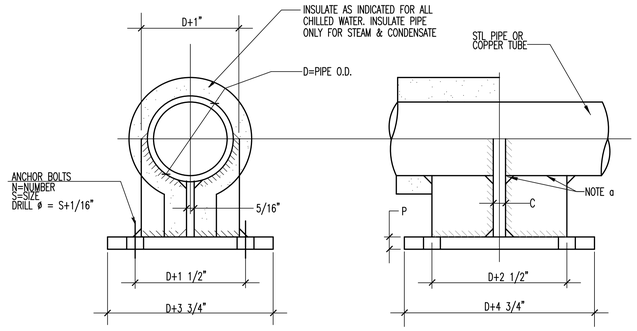

NOTE:
a.WHERE USED FOR COPPER TUBE OR PIPE, BRAZE TO FABRICATED STEEL ANCHOR

2 MH501 SMALL PIPE ANCHOR 1-1/2"-4"
NOT TO SCALE

PIPE ANCHOR SCHEDULE							
D	L	P	T	E	N	S	BOLT PATTERN
6"	8 1/2"	3/4"	3/8"	1/4"	4"	7/8"	
8"	10"	3/4"	1/2"	1/4"	4"	7/8"	
10"	12"	3/4"	1/2"	1/4"	4"	7/8"	
12"	14"	3/4"	1/2"	1/4"	4"	7/8"	
14"	16"	3/4"	1/2"	1/2"	4"	7/8"	
16"	18"	3/4"	1/2"	1/2"	4"	7/8"	
18"	20"	1"	5/8"	1/2"	6"	1"	

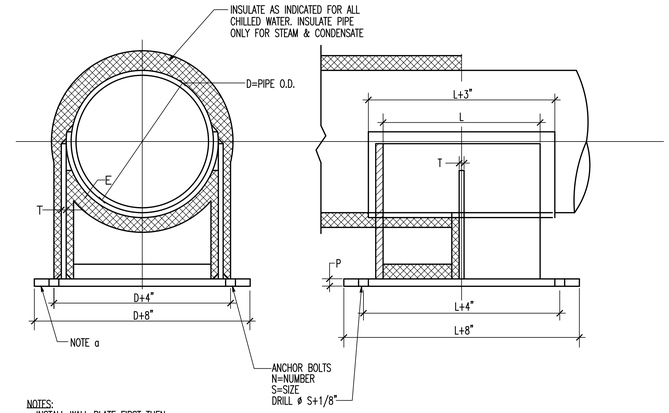

NOTES:
a.INSTALL WALL PLATE FIRST THEN WELD ON REMAINING ASSEMBLY.

3 MH501 LARGE PIPE ANCHOR 6"-18"
NOT TO SCALE

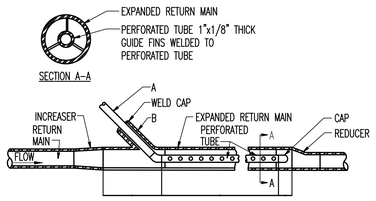

SECTION-EXPANDED RETURN MAIN

A	SIZE, TRAP DISCHARGE LINE	1/2"	3/4"
B	SIZE, 45° WELDING NIPPLE	1"	1-1/4"
C	LENGTH OF EXPANDED MAIN AHEAD OF TRAP DISCHARGE PIPE	7"	7"
D	LENGTH OF PERFORATED PIPE	16-1/2"	16-1/2"
E	LENGTH OF EXPANDED MAIN OF FOLLOWING PERFORATED PIPE	2"	2"

RETURN MAIN SIZE	UP TO 1-1/2"	2"	3" & OVER
EXPANDED RETURN MAIN SIZE		2-1/2"	SAME SIZE

NOTES:
1. 1/2" PERFORATED TUBE SHALL HAVE 40 – 1/8" DIAMETER HOLES SPACED 1-1/2" O.C. IN 4 ROWS.
2. 3/4" PERFORATED TUBE SHALL HAVE 78 – 1/8" DIAMETER HOLES SPACED 1-1/2" O.C. IN 6 ROWS.
3. HOLES IN TUBE SHALL BE SPACED EQUALLY AROUND PERIMETER.

4 MH501 40# PRESSURE STEAM TRAP DISCHARGE INTO PUMP CONDENSATE RETURN LINE
NOT TO SCALE

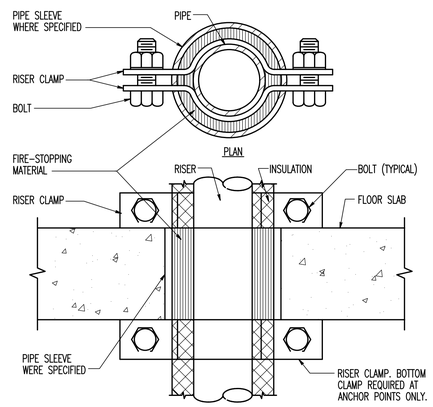

ELEVATION

NOTES:
1. PROVIDE ANCHORS ONLY WHERE SHOWN ON DRAWINGS.
2. EXTEND SLEEVE ABOVE FLOOR WHERE SPECIFIED.

5 MH501 SUPPORT/ANCHOR FOR PIPE RISERS
NOT TO SCALE

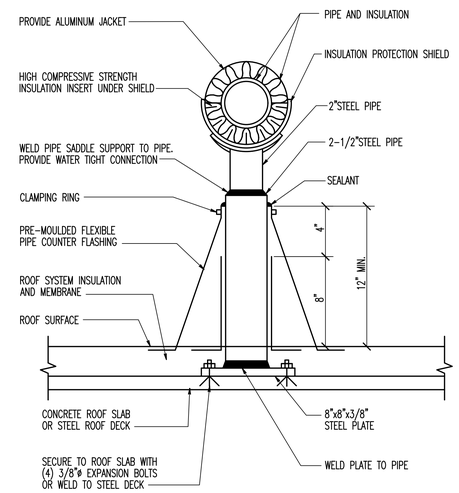

NOTES:
PROVIDE RESTRAINING CLAMPS 8'-0" O.C.

6 MH501 DETAIL FOR SUPPORTING PIPE ON ROOF
NOT TO SCALE

BID SUBMISSION

Revisions	Date

CONSULTANTS

HENRY ADAMS
Consulting Engineers
MECHANICAL ELECTRICAL & PLUMBING ENGINEERS
MECHANICAL, PLUMBING, ELECTRICAL
HENRY ADAMS
600 BALTIMORE AVENUE
BALTIMORE, MD 21204

STRUCTURAL, CIVIL, COST ESTIMATING
ALPHA CORPORATION
1800 WASHINGTON BOULEVARD
SUITE 425
BALTIMORE, MD 21230

KOFFEL ASSOCIATES
Fire Protection ENGINEERS
FIRE PROTECTION
KOFFEL ASSOCIATES, INC.
8815 CENTRE PARK DRIVE
SUITE 200
COLUMBIA, MD 21045-2107

DONALD F. STEINER No. 16124 STATE OF MARYLAND PROFESSIONAL ENGINEER 8/12/15

ARCHITECTS
ERNEST BLAND ASSOCIATES, P.C.
TECHNICAL FACILITIES DESIGN
802 SLIGO AVENUE, SILVER SPRING, MARYLAND 20910
TELEPHONE (301) 589-4811 FAX (301) 589-3810

Drawing Title: MECHANICAL DETAILS
Approved: Project Director

Project Title: MARTINSBURG TASK 7 STEAM UPGRADE FOR 200 ROW
Location: VAMC MARTINSBURG, WV
Date: MARCH 13, 2015
Checked: DFS
Drawn: MEH

Project Number: 613-12-106
Building Number: 200 Row
Drawing Number: MH 501

Department of Veterans Affairs

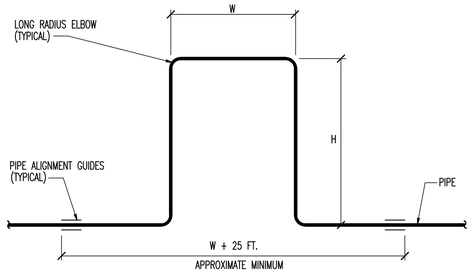

PLAN

EXPANSION LOOP SCHEDULE			
LOOP NO.	W	H	ANC TO ANC DISTANCE
203-EL1	6'-0"	8'-0"	70'
203-EL2	3'-10"	4'-6"	70'
205-EL1	6'-4"	8'-0"	70'
205-EL2	4'-0"	4'-6"	70'
205-EL3	2'-1"	4'-2"	70'
207-EL1	6'-4"	8'-6"	70'
207-EL2	4'-0"	4'-6"	70'
207-EL3	2'-1"	4'-0"	70'
209-EL1	6'-4"	8'-0"	70'
209-EL2	4'-0"	4'-6"	70'
209-EL3	2'-1"	4'-2"	70'
211-EL1	2'-10"	5'-8"	50'
CC-EL1	3'-0"	6'-0"	50'

1 MH502 EXPANSION LOOP DETAIL
NOT TO SCALE

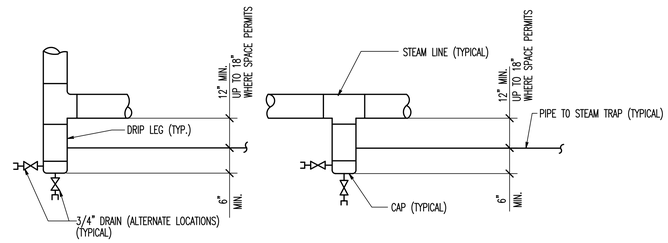

STEAM LINE DRIP POCKET

NOTE:
DRIP POCKET PIPE SIZE SAME AS STEAM MAIN UNLESS OTHERWISE NOTED.

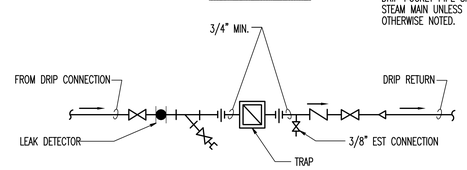

STEAM TRAP ASSEMBLY

2 MH502 STEAM LINE DRIP POCKET STEAM TRAP ASSEMBLY
NOT TO SCALE

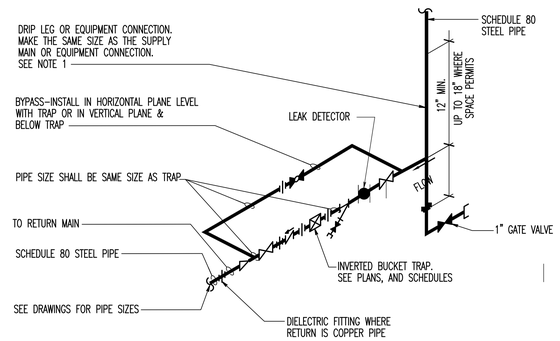

NOTE:

1. ALL DRIP POINTS ON STEAM MAINS SHALL BE PROVIDED WITH A 12" MINIMUM HIGH DRIP LEG FROM BOTTOM OF STEAM MAIN TO TRAP INLET. PROVIDE UP TO 18" WHERE SPACE PREMITS. DRIP LEG SHALL HAVE 6" SCALE POCKET BELOW TRAP INLET.
2. PROVIDE BYPASS PIPING.

3 MH502 INVERTED BUCKET STEAM TRAP ASSEMBLY
NOT TO SCALE

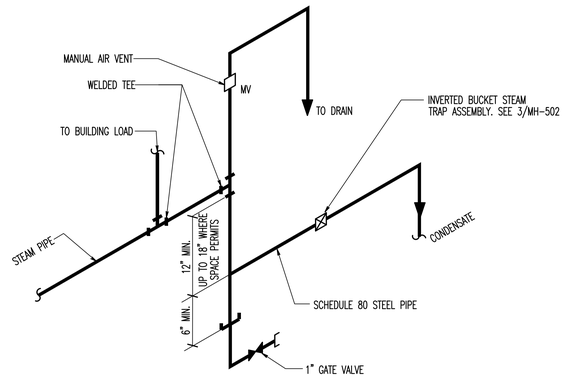

4 MH502 END OF STEAM LINE DRIP TRAP
NOT TO SCALE

BID SUBMISSION

Revisions	Date

CONSULTANTS

HENRY ADAMS
Consulting Engineers
MECHANICAL ELECTRICAL & PLUMBING ENGINEERS

MECHANICAL, PLUMBING, ELECTRICAL
HENRY ADAMS
600 BALTIMORE AVENUE
BALTIMORE, MD 21204

STRUCTURAL, CIVIL, COST ESTIMATING
ALPHA CORPORATION
1800 WASHINGTON BOULEVARD
SUITE 425
BALTIMORE, MD 21230

KOFFEL ASSOCIATES
Fire Protection ENGINEERS

FIRE PROTECTION
KOFFEL ASSOCIATES, INC.
8815 CENTRE PARK DRIVE
SUITE 200
COLUMBIA, MD 21045-2107

DONALD F. STEINER REGISTERED No. 16124 STATE OF MARYLAND PROFESSIONAL ENGINEER
8/12/15

ARCHITECTS

ERNEST BLAND ASSOCIATES, P.C.
TECHNICAL FACILITIES DESIGN

802 SLIGO AVENUE, SILVER SPRING, MARYLAND 20910
TELEPHONE (301) 589-4811 FAX (301) 589-3810

Drawing Title: MECHANICAL DETAILS

Approved: Project Director

Project Title: MARTINSBURG TASK 7 STEAM UPGRADE FOR 200 ROW

Location: VAMC MARTINSBURG, WV

Date: MARCH 13, 2015 | Checked: DFS | Drawn: MEH

Project Number: 613-12-106

Building Number: 200 Row

Drawing Number: MH 502

Department of Veterans Affairs

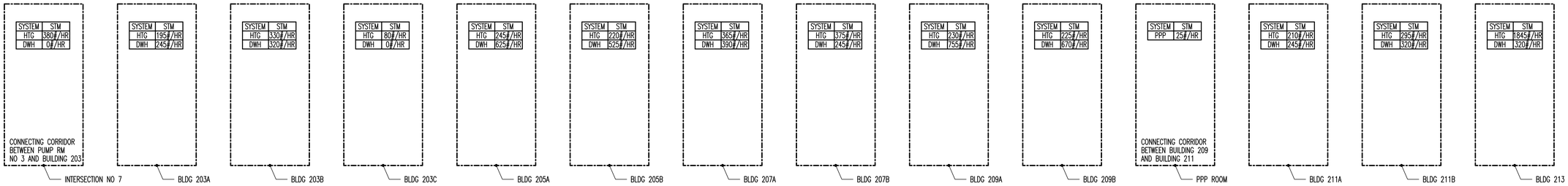

1 MH-701 MECHANICAL STEAM FLOW DIAGRAM
NOT TO SCALE

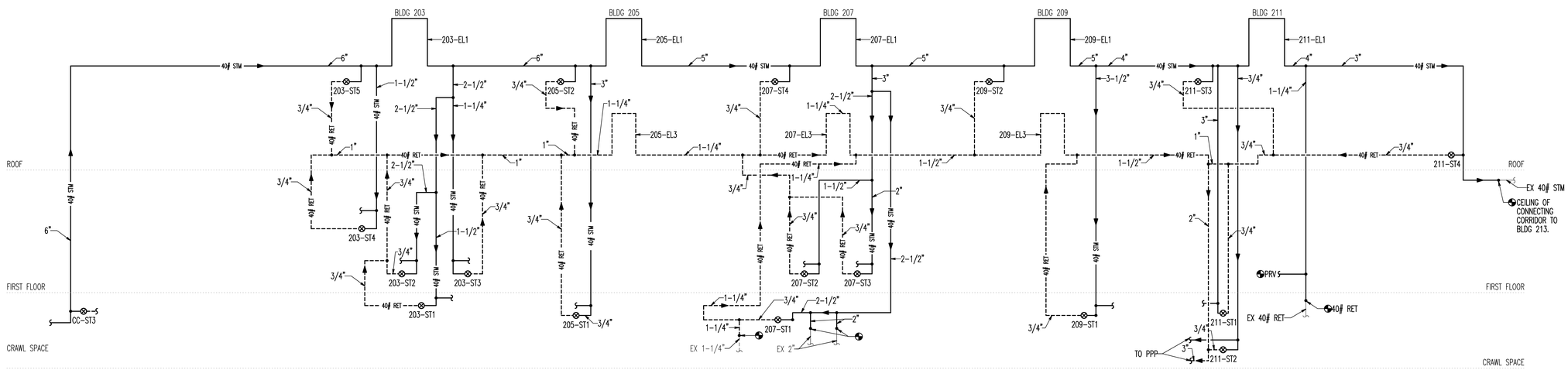

2 MH-701 STEAM FLOW DIAGRAM
NOT TO SCALE

BID SUBMISSION

Revisions	Date

CONSULTANTS

HENRY ADAMS
Consulting Engineers
MECHANICAL ELECTRICAL & PLUMBING ENGINEERS

MECHANICAL, PLUMBING, ELECTRICAL
HENRY ADAMS
600 BALTIMORE AVENUE
BALTIMORE, MD 21204

STRUCTURAL, CIVIL, COST ESTIMATING
ALPHA CORPORATION
1800 WASHINGTON BOULEVARD
SUITE 425
BALTIMORE, MD 21230

KOFFEL ASSOCIATES
Fire Protection ENGINEERS

FIRE PROTECTION
KOFFEL ASSOCIATES, INC.
8815 CENTRE PARK DRIVE
SUITE 200
COLUMBIA, MD 21045-2107

DONALD F. STEINER No. 16124 STATE OF MARYLAND PROFESSIONAL ENGINEER
8/12/15

ARCHITECTS

EBA™
ERNEST BLAND ASSOCIATES, P.C.
TECHNICAL FACILITIES DESIGN

802 SLIGO AVENUE, SILVER SPRING, MARYLAND 20910
TELEPHONE (301) 589-4811 FAX (301) 589-3810

Drawing Title: STEAM SYSTEM FLOW DIAGRAM

Approved: Project Director

Project Title: MARTINSBURG TASK 7 STEAM UPGRADE FOR 200 ROW

Location: VAMC MARTINSBURG, WV

Date: MARCH 13, 2015 | Checked: DFS | Drawn: MEH

Project Number: 613-12-106

Building Number: 200 Row

Drawing Number: MH 701

Department of Veterans Affairs

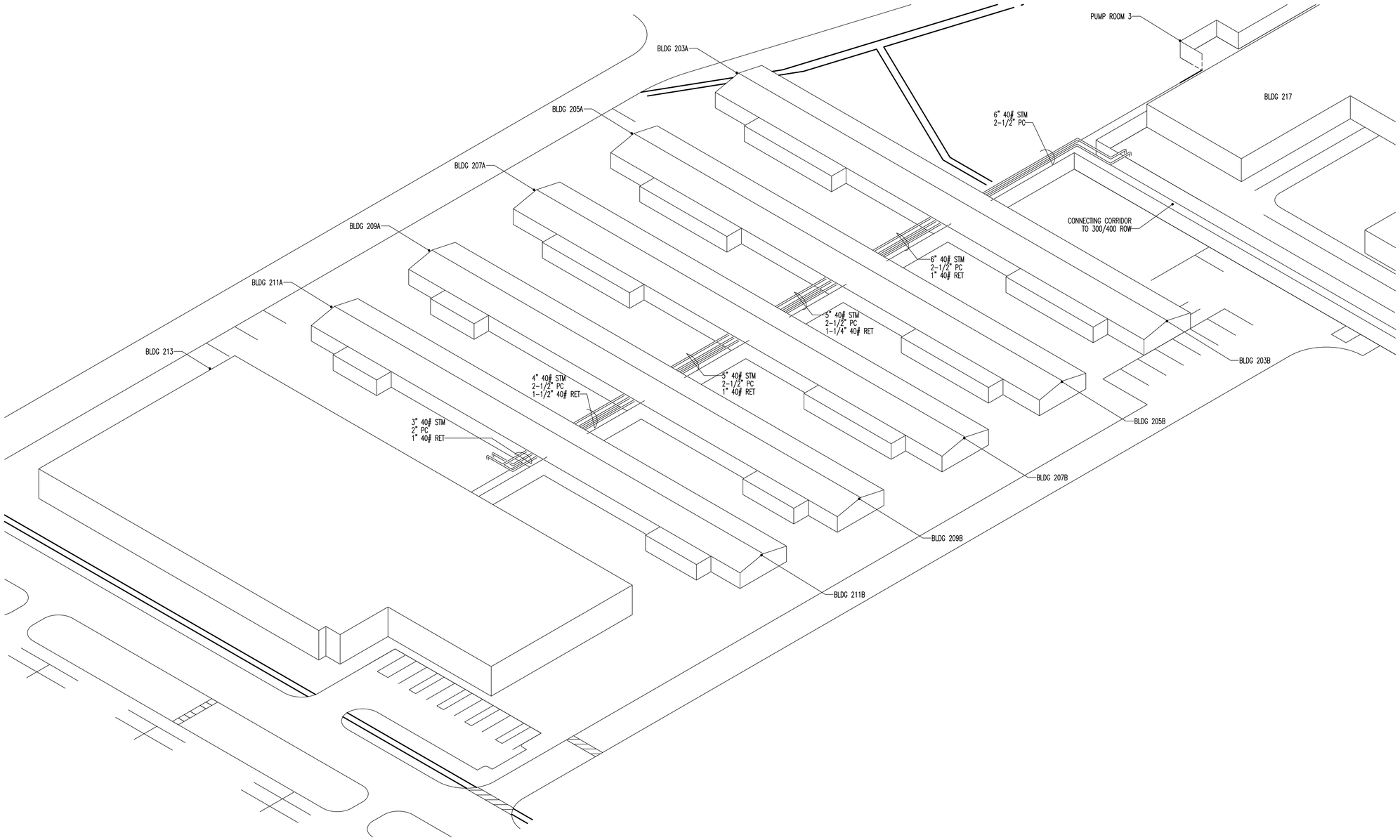

1 MS-001 SITE PLAN – MECHANICAL – NEW WORK

SCALE: NO SCALE

Revisions	Date

CONSULTANTS

HENRY ADAMS
Consulting Engineers
MECHANICAL ELECTRICAL & PLUMBING ENGINEERS

MECHANICAL, PLUMBING, ELECTRICAL
HENRY ADAMS
600 BALTIMORE AVENUE
BALTIMORE, MD 21204

STRUCTURAL, CIVIL, COST ESTIMATING
ALPHA CORPORATION
1600 WASHINGTON BOULEVARD
SUITE 425
BALTIMORE, MD 21230

KOFFEL ASSOCIATES
Fire Protection ENGINEERS

FIRE PROTECTION
KOFFEL ASSOCIATES, INC.
8815 CENTRE PARK DRIVE
SUITE 200
COLUMBIA, MD 21045-2107

DONALD F. STEINER REGISTERED No. 16124 STATE OF MARYLAND PROFESSIONAL ENGINEER
3/12/15

ARCHITECTS

EBA™
ERNEST BLAND ASSOCIATES, P.C.
TECHNICAL FACILITIES DESIGN

802 SLIGO AVENUE, SILVER SPRING, MARYLAND 20910
TELEPHONE (301) 589-4811 FAX (301) 589-3810

Drawing Title: SITE PLAN - MECHANICAL

Approved: Project Director

Project Title: MARTINSBURG TASK 7
STEAM UPGRADE FOR
200 ROW

Location: VAMC MARTINSBURG, WV

Date: MARCH 13, 2015

Checked: DFS

Drawn: MEH

Project Number: 613-12-106

Building Number: 200 Row

Drawing Number: MS 001

BID SUBMISSION

Department of Veterans Affairs

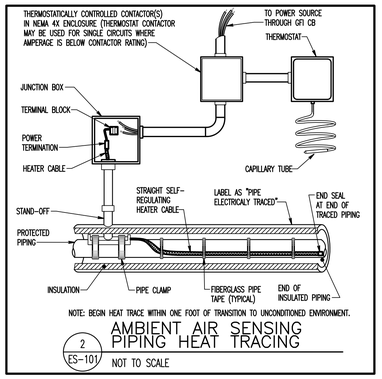

2 ES-101 AMBIENT AIR SENSING PIPING HEAT TRACING

NOT TO SCALE

ELECTRICAL LEGEND

SYMBOL	DESCRIPTION	MOUNTING HEIGHT
J	JUNCTION BOX IN CEILING	– –
	RECEPTACLE – NEMA CONFIGURATION 5-20R DUPLEX	18"
GFI WP	RECEPTACLE – WEATHER RESISTANT(WR) NEMA 5-20R DUPLEX WITH 5mA GROUND FAULT INTERRUPTER AND WEATHER-PROOF WHILE-IN-USE COVER	AS NOTED

DRAWING NOTES

(APPLICABLE TO THIS DRAWING ES-101 ONLY)

1. INFORMATION SHOWN ON THIS DRAWING PERTAINING TO EXISTING CONDITIONS HAS BEEN OBTAINED FROM AVAILABLE BUILDING DRAWINGS OR GENERAL FIELD OBSERVATIONS AND MAY NOT INDICATE ACTUAL EXISTING CONDITIONS IN DETAIL OR DIMENSION. EXISTING CONDITIONS ARE SHOWN IN AN APPROXIMATE WAY ONLY. DRAWING IS DIAGRAMMATIC INTENDED TO CONVEY SCOPE OF WORK. THE CONTRACTOR IS RESPONSIBLE FOR DETERMINING THE ACTUAL EXISTING CONDITIONS PRIOR TO FABRICATION OR PERFORMANCE OF ANY WORK. SHOULD CONDITIONS BE DISCOVERED THAT PREVENT EXECUTION OF THE WORK AS INDICATED, THE CONTRACTOR SHALL IMMEDIATELY NOTIFY THE CONTRACTING OFFICER IN WRITING AND AWAIT DIRECTION BEFORE PROCEEDING WITH THE WORK.
2. UNLESS OTHERWISE INDICATED, EXISTING INDICATED IN LIGHT LINE WEIGHT (———).
3. UNLESS OTHERWISE INDICATED, NEW WORK INDICATED IN DARK SOLID LINE WEIGHT (———).
4. SEVERAL OF THE 200 ROW BUILDINGS WERE UNDER RENOVATION DURING THE DESIGN OF THIS PROJECT. ELECTRICAL PANELS WERE BEING REPLACED AND RELOCATED. CONTRACTOR SHALL FIELD INVESTIGATE EXACT LOCATION OF ELECTRICAL PANELS AND DETERMINE ACTUAL PANEL DESIGNATION AND CIRCUIT AVAILABILITY AT TIME OF INSTALLATION. PROVIDE ALLOWANCES FOR CONDUIT, WIRE, AND NEW CIRCUIT BREAKERS IN EXISTING PANELS AS NOTED ELSEWHERE ON THIS DRAWING.

SPECIAL NOTES

(APPLICABLE TO THIS DWG ES-101 ONLY)

1. CONNECT TO EXISTING NORMAL PANEL IN BUILDING 203 VIA 2#12+#12GW IN 3/4" CONDUIT AND 1P-20A BREAKER. ASSUME 100FT OF CONDUIT AND WIRING AND THAT A CIRCUIT BREAKER MUST BE PROVIDED IN EXISTING AVAILABLE SPACE.
2. CONNECT TO EXISTING NORMAL PANEL IN BUILDING 205 VIA 2#12+#12GW IN 3/4" CONDUIT AND 1P-20A BREAKER. ASSUME 100FT OF CONDUIT AND WIRING AND THAT A CIRCUIT BREAKER MUST BE PROVIDED IN EXISTING AVAILABLE SPACE.
3. CONNECT TO EXISTING NORMAL PANEL IN BUILDING 207 VIA 2#12+#12GW IN 3/4" CONDUIT AND 1P-20A BREAKER. ASSUME 100FT OF CONDUIT AND WIRING AND THAT A CIRCUIT BREAKER MUST BE PROVIDED IN EXISTING AVAILABLE SPACE.
4. CONNECT TO EXISTING NORMAL PANEL IN BUILDING 209 VIA 2#12+#12GW IN 3/4" CONDUIT AND 1P-20A BREAKER. ASSUME 100FT OF CONDUIT AND WIRING AND THAT A CIRCUIT BREAKER MUST BE PROVIDED IN EXISTING AVAILABLE SPACE.
5. CONNECT TO EXISTING NORMAL PANEL IN BUILDING 211 VIA 2#12+#12GW IN 3/4" CONDUIT AND 1P-20A BREAKER. ASSUME 100FT OF CONDUIT AND WIRING AND THAT A CIRCUIT BREAKER MUST BE PROVIDED IN EXISTING AVAILABLE SPACE.
6. MOUNT RECEPTACLE EXPOSED/SURFACE MOUNTED ON ROOF FOR GENERAL MAINTENANCE.
7. MOUNT RECEPTACLE IN ATTIC OF BUILDING FOR GENERAL MAINTENANCE. COORDINATE EXACT LOCATION WITH FIELD CONDITIONS.
8. PROVIDE 120V CONNECTION TO ELECTRIC HEAT TRACE CONTROLLER/POWER SUPPLY. HEAT TRACE CONTROLLER/POWER SUPPLY AND HEAT TRACE PROVIDED BY DIVISION 23 AS SPECIFIED IN SECTION 23 22 13. COORDINATE EXACT LOCATION OF HEAT TRACE CONTROLLER/POWER SUPPLY WITH DIVISION 23 CONTRACTOR. REFER TO DETAIL 2/ES-101.
9. CONNECT TO EXISTING NEAREST NORMAL PANEL VIA 2#12+#12GW IN 3/4" CONDUIT AND 1P-20A BREAKER. ASSUME 100FT OF CONDUIT AND WIRING AND THAT A CIRCUIT BREAKER MUST BE PROVIDED IN EXISTING AVAILABLE SPACE.

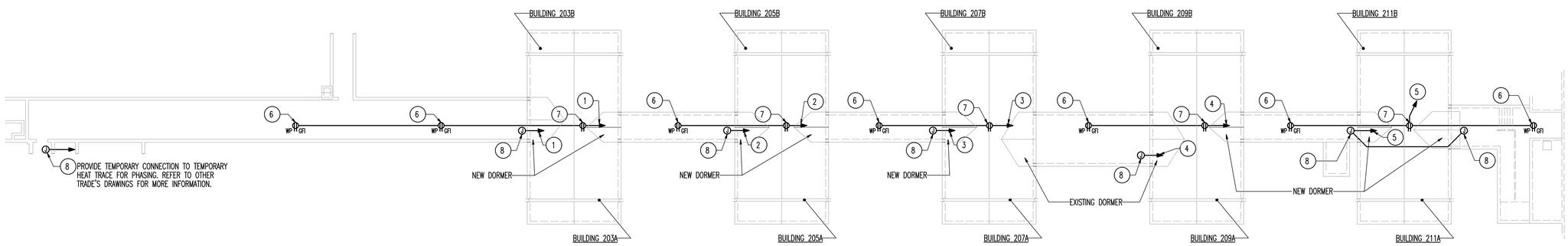

1 ES-101 ELECTRICAL – NEW WORK

SCALE: 1/16" = 1'-0"

1/16" = 1' – 0" 0 8 16 32 48 FT

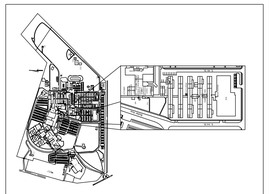

SITE KEY PLAN

NOT TO SCALE

BID SUBMISSION

Revisions	Date

CONSULTANTS

HENRY ADAMS
Consulting Engineers
MECHANICAL ELECTRICAL & PLUMBING ENGINEERS

MECHANICAL, PLUMBING, ELECTRICAL
HENRY ADAMS
600 BALTIMORE AVENUE
BALTIMORE, MD 21204

STRUCTURAL, CIVIL, COST ESTIMATING
ALPHA CORPORATION
1800 WASHINGTON BOULEVARD
SUITE 425
BALTIMORE, MD 21230

KOFFEL ASSOCIATES
Fire Protection ENGINEERS

FIRE PROTECTION
KOFFEL ASSOCIATES, INC.
8815 CENTRE PARK DRIVE
SUITE 200
COLUMBIA, MD 21045-2107

JOHN DOUGLAS TERRA REGISTERED No. 15228 STATE OF WEST VIRGINIA PROFESSIONAL ENGINEER
12 March 2015

ARCHITECTS

ERNEST BLAND ASSOCIATES, P.C.
TECHNICAL FACILITIES DESIGN

802 SLIGO AVENUE, SILVER SPRING, MARYLAND 20910
TELEPHONE (301) 589-4811 FAX (301) 589-3810

Drawing Title: ELECTRICAL POWER - NEW WORK

Approved: Project Director

Project Title: MARTINSBURG TASK 7 STEAM UPGRADE FOR 200 ROW

Location: VAMC MARTINSBURG, WV

Date: MARCH 13, 2015 | Checked: ADP | Drawn: MWL

Project Number: 613-12-106

Building Number: 200 Row

Drawing Number: ES 101

Department of Veterans Affairs