SKYTRON® HUNTINGTON VA MEDICAL CENTER

Specification for the SKYTRON products found within this information package are specifically designated for your facility. Please ensure that all of your custom specifications have been included. Deviating from the depicted specific equipment placement could cause equipment conflicts in the room and must be approved by a Skytron Representative.

Equipment References	Drawing Index #	Note that not all drawings will be required for each mount / drawings package	
A, S	00a	**Room Layout -**	Contains overhead view of Skytron equipment
	_1	**Elevation/Mounting Details -**	Contains elevation drawings of equipment with mounting details
	_2	**Carrier Details -**	Contains front, left and right side views of equipment carriers detailing accessories and outlet placement
	_3	**Medical Gas Details -**	Contains medical gas details required for the riser plate installation
	_4	**Electrical Wiring Detail -**	Contains detailed wiring diagram and circuit requirements for equipment booms and lights
	_5	**Communication Details -**	Contains a breakdown of required communications cabling and connections
	_6	**Light Fixture Details -**	Contains details of light wiring for fixture mounts and back box details
	S1a	**Integration Elevation Details -**	Contains elevation drawings of the Integration system
	S1b	**Integration Mounting Details -**	Contains mounting details of the Integration system

Drawing Package Revision Summary

Rev #	Date/Quote	Description
0	1/29/2014 46163-0	New Submittal Package
1	3/6/2014 46163-0	Skyvision changes
2		
3		
4		
5		
6		
7		

⚠ PLEASE READ THE FOLLOWING CAREFULLY ⚠

I have read the appropriate requirements from the Skytron Pre-Installation Guide for Ergon booms and consulted with the individual trades. I understand there are specific ceiling height, medical gas, electrical, video/communications and structural requirements that must be supplied by the appropriate trade representatives to support this project. Please be aware that modification to the site specific document could result in additional Change Order/Drawing Change fees. These fees take place after the second Submittal Revision or the first Fabrication Revision. Please speak with your Skytron Representative if you have any questions with regards to these fees. All final tie-ins of electrical connections, plumbing and media must be made by a qualified and licensed individual. Skytron does not provide final tie-in services due to local licensing regulations. Finish work (e.g., caulking and trim) is the responsibility of others. Installation of standard product moldings or trim is included in the pricing provided.

⚠ EACH DRAWING MUST BE INITIALED AND DATED ⚠

☐ **Accepted -** as is ☐ **Accepted -** with changes ☐ **Rejected**

Accepted by:_____
(print)
Accepted by:_____ Date:_____
(signature)
Requested Delivery Date_____ P.O. #:_____

SKYTRON®

⚠ FINAL PLACEMENT OF REQUIRED CONDUIT IS THE RESPONSIBILITY OF AND DETERMINED BY THE ARCHITECT. ⚠ ⚠ IN THE EVENT THAT FIXTURE LOCATIONS NEED TO CHANGE PLEASE CHECK WITH SKYTRON ON THE REVISED LAYOUT LOCATION ⚠

SITE SPECIFIC LAYOUT

EQUIPMENT SCHEDULE	
ID	DESCRIPTION
A	ANESTHESIA COLUMN
S	SKYVISION RACK

* IF SKYVISION IS APPLICABLE REFER TO THE LAST PORTION OF BOOM PACKAGE*

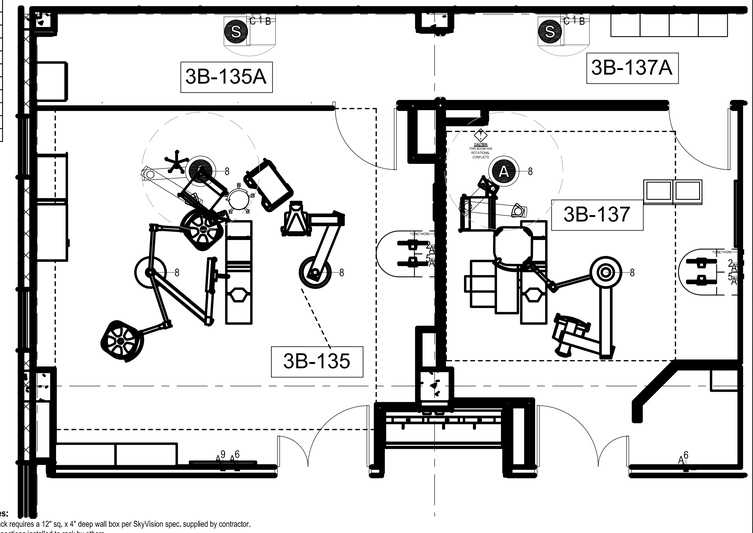

SkyVision Notes:
- SkyVision rack requires a 12" sq. x 4" deep wall box per SkyVision spec. supplied by contractor.
- Network connections installed to rack by others.
- Structural support for SkyVision rack designed by engineer of records to support 500 lbs. of load.
- Mounting hardware supplied by others to meet support requirements.

INITIAL:_____
DATE:_____

PROJECT #: 13-204-DR
SUBMITTAL
PLOT DATE: 10/31/2014

HUNTINGTON VAMC

ROOM TYPE: GEN OR
REV. #: 1
DESCRIPTION: ROOM LAYOUT

SHEET 00a

SKYTRON®

⚠ FINAL PLACEMENT OF REQUIRED CONDUIT IS THE RESPONSIBILITY OF AND DETERMINED BY THE ARCHITECT. ⚠ ⚠ IN THE EVENT THAT FIXTURE LOCATIONS NEED TO CHANGE PLEASE CHECK WITH SKYTRON ON THE REVISED LAYOUT LOCATION ⚠

SITE SPECIFIC LAYOUT

EQUIPMENT SCHEDULE	
ID	DESCRIPTION
A	ANESTHESIA COLUMN
S	SKYVISION RACK

* IF SKYVISION IS APPLICABLE REFER TO THE LAST PORTION OF BOOM PACKAGE*

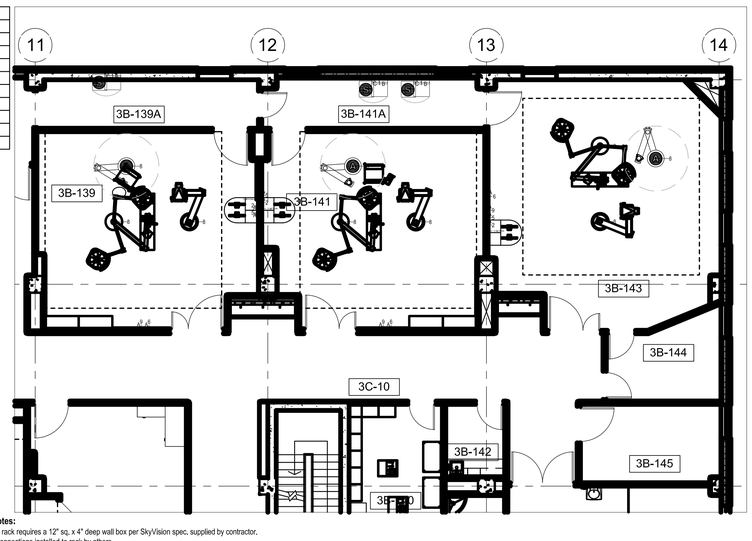

SkyVision Notes:
- SkyVision rack requires a 12" sq. x 4" deep wall box per SkyVision spec. supplied by contractor.
- Network connections installed to rack by others.
- Structural support for SkyVision rack designed by engineer of records to support 500 lbs. of load.
- Mounting hardware supplied by others to meet support requirements.

INITIAL:_____
DATE:_____

PROJECT #: 13-204-DR
SUBMITTAL
PLOT DATE: 10/31/2014

HUNTINGTON VAMC

ROOM TYPE: GEN OR
REV. #: 1
DESCRIPTION: ROOM LAYOUT

SHEET 01a

SKYTRON®

⚠ FINAL PLACEMENT OF REQUIRED CONDUIT IS THE RESPONSIBILITY OF AND DETERMINED BY THE ARCHITECT. ⚠ ⚠ IN THE EVENT THAT FIXTURE LOCATIONS NEED TO CHANGE PLEASE CHECK WITH SKYTRON ON THE REVISED LAYOUT LOCATION ⚠

SITE SPECIFIC LAYOUT

EQUIPMENT SCHEDULE	
ID	DESCRIPTION
A	EQUIPMENT COLUMN
C	EQUIPMENT BOOM

* IF SKYVISION IS APPLICABLE REFER TO THE LAST PORTION OF BOOM PACKAGE*

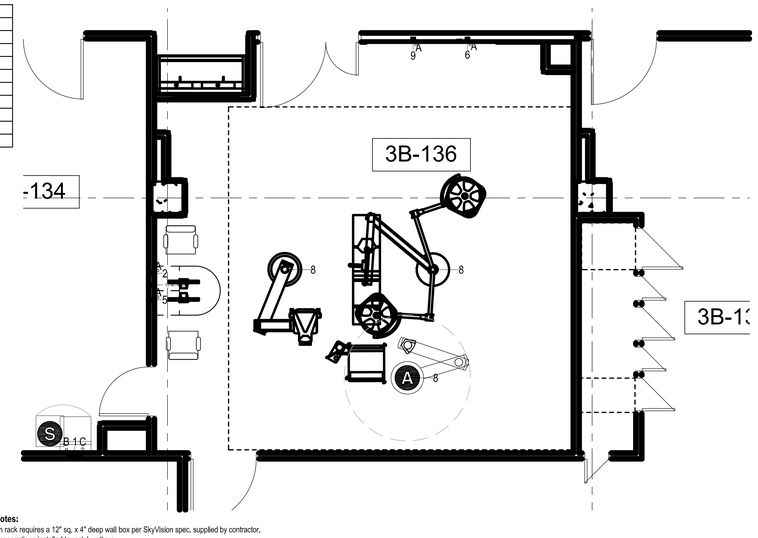

SkyVision Notes:
- SkyVision rack requires a 12" sq. x 4" deep wall box per SkyVision spec. supplied by contractor.
- Network connections installed to rack by others.
- Structural support for SkyVision rack designed by engineer of records to support 500 lbs. of load.
- Mounting hardware supplied by others to meet support requirements.

INITIAL:_____
DATE:_____

PROJECT #: 13-204-DR
SUBMITTAL
PLOT DATE: 10/31/2014

HUNTINGTON VAMC

ROOM TYPE: GEN OR
REV. #: 1
DESCRIPTION: ROOM LAYOUT

SHEET 02a

SKY1
FOR REFERENCE ONLY - 10-31-2014
NOT FOR CONSTRUCTION

SKYTRON®

ELEVATIONS SHOWN BELOW ARE GENERIC AND PROVIDE TYPICAL ELEVATIONS FOR EACH ITEM.

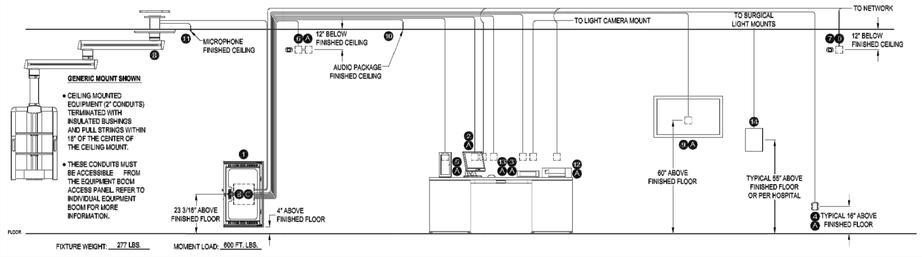

HVAC Required to maintain Storage cabinet temperature not to exceed 90degrees Fahrenheit. Airflow to be adjusted accordingly

NOTE: ALL JUNCTION BOXES AND CONDUIT TO BE SUPPLIED BY CONTRACTOR.

HYBRID II SKYVISION CONDUIT LEGEND (NOTE - ITEMS LISTED MAY NOT ALL BE PART OF THIS PROJECT. REFER TO ROOM LAYOUTS FOR SITE SPECIFIC INFORMATION.)

ID	ITEM	CONDUIT DIAMETER	DESCRIPTION	TERMINATION	LOCATION OF JUNCTION BOX	TO
1	SKYVISION ENCLOSURE	N / A	SKYVISION ROUGH-IN	12" SQ. X 4" DEEP JUNCTION BOX	SEE ROUGH-IN DETAIL	N / A
		2"	NETWORK CONNECTIONS	ROUTE TO NETWORK	PER HOSPITAL	HOSPITAL NETWORK
2	TOUCH PANEL	1"	TOUCH PANEL, KEYBOARD, MOUSE	4"SQ. X 3.5" DEEPBOX W/ 1 GANG P-RING	PER HOSPITAL	RACK
		1"	HOSPITAL NETWORK CONNECTION	HOSPITAL SUPPLIED RJ45 NETWORK JACK	PER HOSPITAL	HOSPITAL NETWORK
3	SKYTRON LIGHT CAMERA CONTROL	1"	LIGHT CAM VIDEO TO RACK	4" SQ. X 3.5" DEEP BOX W/ 1 GANG P-RING	PER HOSPITAL	RACK
		1"	LIGHT CAM VIDEO FROM CAMERA	4" SQ. X 2" DEEP BOX W/ 1 GANG P-RING	PER HOSPITAL	LIGHT CAM MOUNT
4	WALL SOURCE	1"	SOURCE DESCRIPTION	4" SQ. X 3.5" DEEP BOX W/ 1 GANG P-RING	PER HOSPITAL	RACK
5	EXTERNAL COMPUTER	1"	PC VIDEO	4" SQ. X 3.5" DEEP BOX W/ 1 GANG P-RING	PER HOSPITAL	RACK
6	WALL CAMERA	1.25"	WALL CAMERA	4" SQ. X 3.5" DEEP BOX W/ 1 GANG P-RING	12" BELOW FINISHED CEILING	RACK
		SHARED	WALL CAMERA CONTROL	4" SQ. X 2" DEEP BOX W/ 1 GANG P-RING	12" BELOW FINISHED CEILING	CONNECTED TO 3.5" BOX
7**	IP CAMERA	1"	IP CAMERA	4" SQ. X 2" DEEP BOX W/ 1 GANG P-RING	12" BELOW FINISHED CEILING	NETWORK
8	CEILING MOUNTED EQUIPMENT	2"	DESCRIPTION OF MOUNT	PER EQUIPMENT MANUFACTURER	MOUNT ID	RACK
9	WALL DISPLAY	1"	WALL DISPLAY	4" SQ. X 3.5" DEEP BOX W/ 1 GANG P-RING	60" ABOVE FINISHED FLOOR	RACK
10	AUDIO PACKAGE	3/8" FLEX	CEILING SPEAKERS	TERMINATES TO SPEAKERS PER INSTRUCTIONS	FINISHED CEILING PER HOSPITAL	RACK
11	MICROPHONE	3/8" FLEX	MICROPHONE	STUB OUT	FINISHED CEILING PER HOSPITAL	RACK
12	H/P NETWORK PRINTER	1"	H/P NETWORK PRINTER	4" SQ. X 2" DEEP BOX W/ 1 GANG P-RING	PER HOSPITAL	HOSPITAL NETWORK
13	I-POD DOCK	1"	I-POD CONTROL	4" SQ. X 2" DEEP BOX W/ 1 GANG P-RING	PER HOSPITAL	RACK
14	WALL CONTROL	0.75"	WALL CONTROL - LIGHT INTENSITY	SINGLE/DUAL - 10"H x 8"W x 5.875"D	PER HOSPITAL	LIGHT MOUNT
				TRIPLE - 13.5"H x 10"W X 6.375"D	PER HOSPITAL	LIGHT MOUNT

ID	ITEM	CONDUIT DIAMETER	DESCRIPTION	TERMINATION	LOCATION OF JUNCTION BOX	TO
A	DEVICE POWER	N / A	120V, 20A DUPLEX	PER ENGINEER	PER HOSPITAL	ELECTRICAL
B	SKYVISION POWER	N / A	(2) 120V, 20A DEDICATED CIRCUITS	PER ENGINEER	SKYVISION JUNCTION BOX	ELECTRICAL
C	GROUND LEAD	N / A		PER ENGINEER	FACILITY GROUND	RACK
D	P.O.E.	N / A	POWER OVER ETHERNET	SHARED PER ITEM 7	12" BELOW FINISHED CEILING	HOSPITAL NETWORK

** - IF P.O.E. IS NOT AVAILABLE, USE ELECTRICAL REQUIREMENTS ID A

INITIAL:_____
DATE:_____

PROJECT #: 13-204-DR
SUBMITTAL
PLOT DATE: 3/7/2014

HUNTINGTON VAMC

MDL: SVIS-LINX
QTY.: 6
REV. #: 1
DESCRIPTION: SKYVISION ELEVATION

SHEET
S1a

SKYTRON®

RIGHT-HAND SWING CABINET

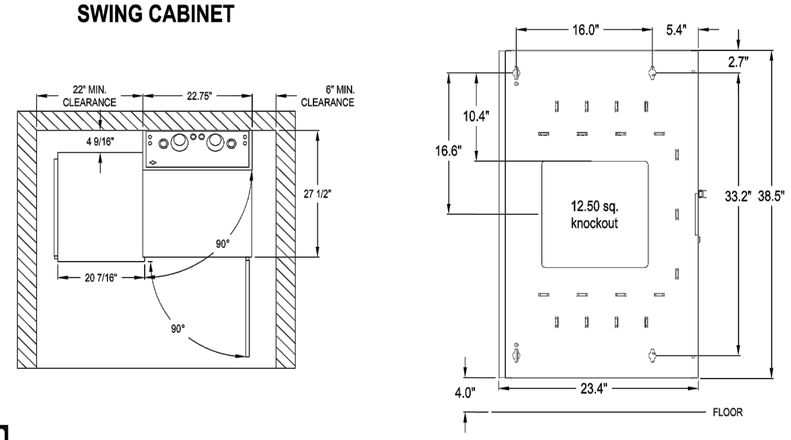

INITIAL:_____
DATE:_____

PROJECT #: 13-204-DR
SUBMITTAL
PLOT DATE: 3/6/2014

HUNTINGTON VAMC

MDL: SVIS-LINX
QTY.: 5
REV. #: 1
DESCRIPTION: SKYVISION MOUNTING

SHEET
S1b

SKYTRON®

LEFT-HAND SWING CABINET

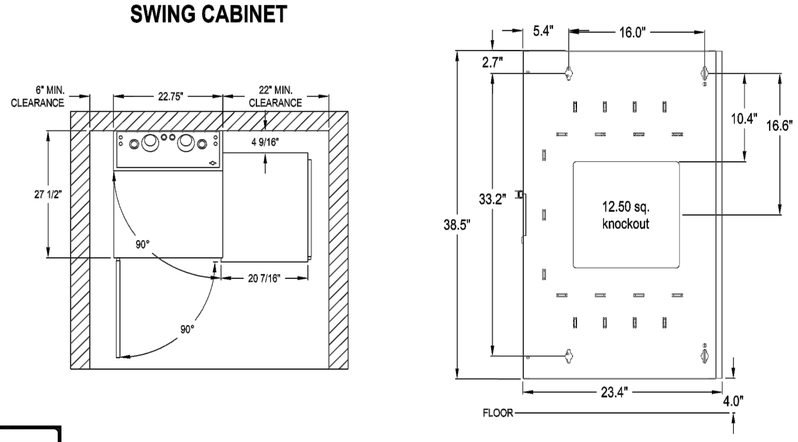

INITIAL:_____
DATE:_____

PROJECT #: 13-204-DR
SUBMITTAL
PLOT DATE: 3/6/2014

HUNTINGTON VAMC

MDL: SVIS-LINX
QTY.: 1
REV. #: 1
DESCRIPTION: SKYVISION MOUNTING

SHEET
S1c

SKY2
FOR REFERENCE ONLY - 10-31-2014
NOT FOR CONSTRUCTION