GENERAL SYMBOLS

- T — TEMPERATURE SENSOR
- H — HUMIDITY SENSOR
- S-1 / 100 — TYPE OF SERVICE: S = SUPPLY; R = RETURN; E = EXHAUST; T = TRANSFER; SCHEDULED DEVICE NO; AIR QUANTITY IN CFM
- 1 — KEYED NOTE
- INTERFACE, EXISTING TO NEW
- SIM / 1 / M101 — SECTION NUMBER; SHEET WHERE LOCATED
- AHU / 1 — EQUIPMENT DESIGNATION; UNIT NUMBER
- FSD / 1 — DAMPER TYPE DESIGNATION; UNIT NUMBER
- 15x15 DUCT SIZE — EXISTING TO REMAIN
- 15x15 DUCT SIZE — NEW WORK
- 15x15 — DUCT SIZE, FIRST FIGURE IS SIDE SHOWN (ACTUAL SIZE INDICATED)
- 15ø — ROUND DUCT SIZE, (ACTUAL SIZE INDICATED)
- 15 x 10ø — SPIRAL FLAT-OVAL DUCT SIZE. FIRST FIGURE IS SIDE SHOWN (ACTUAL SIZE INDICATED)
- AP — ACCESS PANEL, TOP OR SIDE
- FC — FLEXIBLE DUCT CONNECTION
- R — CHANGE OF ELEVATION - RISE (R) OR DROP (D)
- TURNING VANES
- EXISTING EQUIPMENT OR DUCTWORK SHOWN LIGHT HATCHING INDICATES EXISTING ITEMS TO BE REMOVED
- FINE DETAIL
- M — AUTOMATIC DAMPER
- G — GRAVITY BACKDRAFT
- MANUAL VOLUME DAMPER
- FIRE DAMPER
- SMOKE DAMPER
- FIRE/SMOKE DAMPER
- FLEXIBLE DUCT
- SUPPLY SECTION AIR UP
- SUPPLY SECTION AIR DOWN
- RETURN AIR SECTION UP/DOWN
- RETURN AIR SECTION UP/DOWN
- EXHAUST AIR SECTION UP/DOWN
- EXHAUST AIR SECTION UP/DOWN
- FLOW ARROW DOWNSTREAM OF FAN
- FLOW ARROW UPSTREAM OF FAN
- SUPPLY DIFFUSER, REGISTER OR GRILLE AS SCHEDULED
- RETURN GRILLE OR REGISTER AS SCHEDULED
- SLOT DIFFUSER AS SCHEDULED
- SIDEWALL GRILLE OR REGISTER AS SCHEDULED
- ARROWS INDICATE DIRECTION OF AIR DISCHARGE. IF NO ARROWS ARE SHOWN ON PLAN, DEFAULT IS 2-WAY HORIZONTAL FOR SLOT DIFFUSERS, 4-WAY HORIZONTAL FOR SQUARE DIFFUSERS.

PIPING SYMBOLS

BD	BLOW DOWN
CD	CONDENSATE DRAIN
CF	CHEMICAL FEED
CW	COLD WATER, DOMESTIC
CWR	CHILLED WATER RETURN
CWS	CHILLED WATER SUPPLY
GLR	GLYCOL RETURN
GLS	GLYCOL SUPPLY
HWR	HEATING WATER RETURN
HWS	HEATING WATER SUPPLY
LPR	LOW PRESSURE CONDENSATE RETURN
LPS	LOW PRESSURE STEAM SUPPLY
LPSC	LOW PRESSURE STEAM SUPPLY (CLEAN)
MU	MAKE-UP WATER (NON-POTABLE)
PC	PUMPED CONDENSATE
SRV	STEAM RELIEF VENT
V	VENT

PIPE LINE EQUIPMENT

VALVE SYMBOLS

- GATE VALVE - THREADED/FLANGED
- GLOBE VALVE - THREADED/FLANGED
- GATE VALVE WITH 3/4" HOSE ADAPTER
- CHECK VALVE
- WYE STRAINER (WITH BALL VALVE & HOSE CONNECTION)
- WYE STRAINER WITH VALVED DRAIN AND QUICK-COUPLE HOSE CONNECTOR
- FLEXIBLE CONNECTION
- ANGLE GLOBE VALVE
- BUTTERFLY VALVE
- BALL VALVE
- MODULATING CONTROL VALVE
- MODULATING CONTROL BUTTERFLY VALVE
- TWO POSITION CONTROL VALVE
- THREE-WAY MODULATING CONTROL VALVE
- THREE-WAY TWO POSITION CONTROL VALVE
- PRESSURE REGULATING VALVE
- PRESSURE SAFETY VALVE
- AUTOMATIC BALANCING CONTROL VALVE
- WATER BALANCE DEVICE
- CIRCUIT SETTER VALVE
- GATE VALVE WITH GLOBE-VALVED BYPASS
- PLUG VALVE
- CONTROL VALVE (CV) - FLOAT-OPERATED
- PRESSURE REDUCING VALVE (PRV)
- LC — WATER LEVEL CONTROLLER
- M — FLOW METER

MEDIUM DETAIL	FINE DETAIL	
		ELBOW DOWN
		ELBOW UP
		TEE DOWN
		TEE UP
		CAP
		CONCENTRIC REDUCER/INCREASER
		ECCENTRIC REDUCER/INCREASER
		FLANGED
		DEMO TO BE REMOVED
		UNION
		AIRVENT
		RELIEF VALVE

EQUIPMENT DESIGNATION

AF	AIR FILTER
AHU	AIR HANDLING UNIT
AP	ACCESS PANEL
AS	AIR SEPARATOR
AV	AUTOMATIC VENT
BFP	BACKFLOW PREVENTER
CH	CHILLER
CAV	CONSTANT AIR VOLUME
CC	COOLING COIL
CO	CLEAN OUT
CP	CONDENSATE RETURN PUMP
CSG	CLEAN STEAM GENERATOR
CUH	CABINET UNIT HEATER
CWP	CHILLED WATER PUMP
DPS	DIFFERENTIAL PRESSURE SWITCH
DPT	DIFFERENTIAL PRESSURE TRANSMITTER
EF	EXHAUST FAN
EJ	EXPANSION JOINT
ET	EXPANSION TANK
FC	FLEXIBLE DUCT CONNECTION
FCU	FAN COIL UNIT
FD	FIRE DAMPER
FSD	COMBINATION FIRE/SMOKE DAMPER
FS	FLOW SWITCH
GP	GLYCOL PUMP
GIH	GRAVITY INTAKE HOOD
H	HUMIDIFIER
HC	HEATING COIL
HWP	HEATING WATER PUMP
HX	HEAT EXCHANGER
L	LOUVER
MD	MOTORIZED DAMPER
MV	MANUAL VENT
PHC	PREHEAT COIL
PRV	PRESSURE REDUCING VALVE
PS	PRESSURE SWITCH
RF	RETURN FAN
SD	SMOKE DAMPER
SF	SUPPLY FAN
ST	STEAM TRAP
TCV	TEMPERATURE CONTROL VALVE
UH	UNIT HEATER
VAV	VARIABLE AIR VOLUME BOX
VD	MANUAL VOLUME DAMPER
VE	VIBRATION ELIMINATOR

GENERAL ABBREVIATIONS

A	AIR
ACC	ACCESSORIES
AFF	ABOVE FINISHED FLOOR
AI	ANALOG SIGNAL INPUT
AO	ANALOG SIGNAL OUTPUT
APD	AIR PRESSURE DROP
APPROX	APPROXIMATE
ARCH	ARCHITECTURE/ARCHITECT
AUX	AUXILIARY
AVG	AVERAGE
BDD	BACK DRAFT DAMPER
BHP	BRAKE HORSEPOWER
BI	BINARY SIGNAL INPUT
BO	BINARY SIGNAL OUTPUT
BOB	BOTTOM OF BEAM
BOD	BOTTOM OF DUCT
BOP	BOTTOM OF PIPE
BTU	BRITISH THERMAL UNIT
BTUH	BRITISH THERMAL UNITS PER HOUR
CAP	CAPACITY
CAV	CONSTANT AIR VOLUME
CFM	CUBIC FEET PER MINUTE
CONC	CONCRETE
COND	CONDENSATE
CONN	CONNECTION
CORR	CORRIDOR
CV	CONTROL VALVE
DB	DRY BULB
DBA	A-WEIGHTED DECIBELS
DEFL	DEFLECTION
DEG	DEGREES
DIA	DIAMETER
DIM	DIMENSION
DISCH	DISCHARGE
DIV	DIVISION
DN	DOWN
DTL	DETAIL
DWG(S)	DRAWING(S)
EA	EXHAUST AIR OR EACH (PER CONTEXT)
EAT	ENTERING AIR TEMPERATURE
EER	ENERGY EFFICIENT RATIO
EFF	EFFICIENCY
ELEC	ELECTRIC
ELEV	ELEVATION
EQ	EQUAL
ESP	EXTERNAL STATIC PRESSURE
EWB	ENTERING AIR WET BULB TEMPERATURE
EWT	ENTERING WATER TEMPERATURE
EXIST, EX	EXISTING
EXH	EXHAUST
DEG F	DEGREES FAHRENHEIT
F	FAHRENHEIT
FIN	FINISHED
FLR	FLOOR
FPF	FINS PER FOOT
FPM	FEET PER MINUTE
FT	FEET
FT-HD	HEAD IN FEET
GA	GAUGE
GAL	GALLONS
GALV	GALVANIZED
GC	GENERAL CONTRACTOR
GPM	GALLONS PER MINUTE
H	HEIGHT
HD	HEAD
HORIZ	HORIZONTAL
HP	HORSEPOWER
HR	HOUR
HVAC	HEATING, VENTILATING & AIR CONDITIONING
HW	HOT WATER
HZ	HERTZ
IN	INCHINCHES
ISP	INTERNAL STATIC PRESSURE

GENERAL ABBREVIATIONS

JS	JOIST SPACE
KW	KILOWATTS
L	LENGTH
LAT	LEAVING AIR TEMPERATURE
LB(S)	POUND(S)
LF	LINEAR FEET
LRA	LOCKED ROTOR AMPS
LWT	LEAVING WATER TEMPERATURE
MAN	MANUAL
MAX	MAXIMUM
MBH	THOUSANDS BRITISH THERMAL UNITS PER HOUR
MECH	MECHANICAL
MERV	MINIMUM EFFICIENCY REPORTING VALUE (ASHRAE 52.2)
MFR	MANUFACTURER
MIN	MINIMUM OR MINUTE (PER CONTEXT)
NC	NORMALLY CLOSED OR NOISE CRITERIA (PER CONTEXT)
NO	NORMALLY OPEN OR NUMBER (PER CONTEXT)
NIC	NOT IN CONTRACT
NOM	NOMINAL
NPLV	NON-STANDARD PART LOAD VALUE
NPSH	NET POSITIVE SUCTION HEAD
NTS	NOT TO SCALE
OA	OUTSIDE AIR
OC	ON CENTER
OD	OUTSIDE DIAMETER
PD	PRESSURE DROP
PH	PHASE
PPH	POUNDS PER HOUR
PRESS	PRESSURE
PRV	PRESSURE REGULATING VALVE
PSI	POUNDS PER SQUARE INCH
PSIA	PSI ABSOLUTE
PSIG	POUNDS PER SQUARE INCH GAUGE
QTY	QUANTITY
RA	RETURN AIR
RAD	RADIATED
RH	RELATIVE HUMIDITY
RLA	RUNNING LOAD AMPS
RM	ROOM
RPM	REVOLUTIONS PER MINUTE
SA	SUPPLY AIR
SEC'N	SECTION
SENS	SENSIBLE
SF	SQUARE FOOT
SH	SENSIBLE HEAT
SHT	SHEET
SOL	SOLENOID
SP	STATIC PRESSURE
SPD	STATIC PRESSURE DIFFERENTIAL
SPT	STATIC PRESSURE TRANSMITTER
SQ	SQUARE
SST	STAINLESS STEEL
STL	STEEL
STM	STEAM
TC	TEMPERATURE CONTROL
TD	THERMODYNAMIC
TDH	TOTAL DYNAMIC HEAD
TEMP	TEMPERATURE
T&P	TEMPERATURE AND PRESSURE
TSP	TOTAL STATIC PRESSURE
TOT	TOTAL
TYP	TYPICAL
UNO	UNLESS NOTED OTHERWISE
V	VOLTS
VAC	VACUUM
VB	VACUUM BREAKER
VD	VOLUME DAMPER (MANUAL)
VE	VIBRATION ELIMINATOR OR ISOLATOR
VEL	VELOCITY
VERT	VERTICAL
VFD	VARIABLE FREQUENCY DRIVE
VOL	VOLUME
VTR	VENT THRU ROOF
W	WATT OR WIDTH (PER CONTEXT)
W/	WITH
WB	WET BULB
WC	WATER COLUMN
WG	WATER GAUGE
W/O	WITHOUT
WPD	WATER PRESSURE DIFFERENTIAL
WT	WEIGHT

GENERAL NOTES:

1. THESE PLANS ARE DIAGRAMMATIC IN NATURE. THE CONTRACTOR SHALL BE PREPARED TO MAKE SOME ALTERATIONS TO THE EXACT LOCATION OF DUCTWORK, PIPING AND EQUIPMENT FROM THE LOCATION INDICATED ON THESE DRAWINGS TO FIT ACTUAL JOB CONDITIONS.
2. ALL ELBOWS, FITTINGS, ETC., IN PIPING AND DUCTWORK REQUIRED TO CLEAR ALL JOB OBSTRUCTIONS ARE NOT NECESSARILY INDICATED. ALL NECESSARY TRANSITIONS, FITTINGS AND OFFSETS ARE REQUIRED WHETHER SHOWN OR NOT.
3. BECAUSE OF THE LIMITED SPACE AVAILABLE TO INSTALL ALL OF THE MECHANICAL WORK, COORDINATION BETWEEN THE VARIOUS TRADES IS OF THE UTMOST IMPORTANCE.
4. THE CONTRACTOR SHALL COORDINATE STAGING AND SCHEDULING WITH THE OWNER'S REPRESENTATIVE.
5. EXISTING CONDITIONS ARE BASED ON INFORMATION OBTAINED FROM PREVIOUS CONSTRUCTION DOCUMENTS AND INFORMAL FIELD OBSERVATION AND SHALL NOT BE CONSTITUTED AS "AS BUILT." THE CONTRACTOR SHALL FIELD-VERIFY EXISTING CONDITIONS BEFORE THE ONSET OF CONSTRUCTION.
6. DEMOLISH ALL PIPING, DUCTWORK EQUIPMENT, ETC., SHOWN TO BE REMOVED, IN ITS ENTIRETY, INCLUDING ALL HANGERS AND SUPPORTS.
7. WHERE CONTRACTOR IS REQUIRED TO CONCEAL NEW WORK, REMOVE OR MODIFY EXISTING CONSTRUCTION OR EQUIPMENT, OR ATTACH TO EXISTING CONSTRUCTION, THE CONTRACTOR SHALL REPAIR OR REPLACE EXISTING CONSTRUCTION AND MATERIALS TO MATCH CONDITIONS AT THE ONSET OF CONSTRUCTION. IT IS THE CONTRACTOR'S RESPONSIBILITY TO REMOVE AND REPLACE EXISTING CEILINGS AND WALLS REQUIRED FOR INSTALLATION OF MECHANICAL SYSTEMS.
8. THE OWNER SHALL MAINTAIN ALL SALVAGE RIGHTS OF EQUIPMENT AND MATERIALS REMOVED. ALL EQUIPMENT AND MATERIALS NOT CLAIMED BY THE OWNER SHALL BE REMOVED FROM THE PREMISES BY THIS CONTRACTOR.
9. CONTRACTOR SHALL PROVIDE SEISMIC BRACING AND MOUNTING OF EQUIPMENT AND MATERIALS IN COMPLIANCE WITH ALL LOCAL CODE REQUIREMENTS AND THE REQUIREMENTS OF SPECIFICATION SECTION 20 0800.
10. ALL WORK SHALL BE INSTALLED PER THE REFERENCE DETAILS, REGARDLESS OF WHETHER OR NOT THE DETAILS ARE CALLED OUT ON THE PLANS. SEE MP-5XX AND MH-5XX SERIES SHEETS.
11. PROVIDE VENTS AT ALL PIPING HIGH POINTS, AND DRAINS AT ALL PIPING LOW POINTS, REGARDLESS OF WHETHER SHOWN OR NOT.
12. THE CONTRACTOR SHALL VERIFY ALL REFRIGERANT PIPE SIZING AND ROUTINGS WITH THE EQUIPMENT MANUFACTURER. THE CONTRACTOR SHALL ALSO PROVIDE ALL REQUIRED REFRIGERANT ACCESSORIES AS RECOMMENDED BY THE EQUIPMENT MANUFACTURER FOR COMPLETE AND FULLY FUNCTIONAL SYSTEMS.
13. DO NOT SCALE THE LOCATION OF HVAC CEILING ELEMENTS, SUCH AS AIR INLETS AND OUTLETS, FROM THE M-SERIES DRAWINGS. SEE ARCHITECTURAL REFLECTED CEILING PLANS FOR EXACT HVAC CEILING ELEMENT LOCATIONS. REFLECTED CEILING PLANS GOVERN THE LOCATION OF DIFFUSERS, REGISTERS, AND GRILLES. M-SERIES DRAWINGS GOVERN TYPE, STYLE, AND SIZE OF DIFFUSERS, REGISTERS, AND GRILLES.
14. ALL DUCTWORK SHALL COMPLY WITH "HVAC DUCT CONSTRUCTION STANDARDS - METAL AND FLEXIBLE," 3RD EDITION, SMACNA 2005, EXCEPT WHERE MORE RESTRICTIVE REQUIREMENTS ARE SPECIFIED. ANY PLAN REFERENCES TO "SMACNA FIGURE ---" REFERS TO THIS STANDARD. SEE SPECIFICATIONS FOR SCHEDULE OF DUCT PRESSURE CLASS AND SEAL CLASS.
15. IN GENERAL, THE FINAL FLEX DUCT RUNOUT TO EACH DIFFUSER, REGISTER, OR GRILLE IS NOT SIZED ON PLANS. FLEX DUCT RUNOUT SIZE SHALL MATCH AIR OUTLET NECK SIZE, UNO.
16. IT IS THE INTENT OF THESE DRAWINGS THAT A MANUAL BALANCING DAMPER BE PROVIDED AT EVERY INDIVIDUAL CONNECTION TO A SUPPLY AIR INLET OR OUTLET. PROVIDE MANUAL BALANCING DAMPER AT EACH POINT OF CONNECTION OF FLEX DUCT RUNOUT TO BRANCH DUCT (AT THE SPIN-IN FITTING) UNLESS A BALANCING DAMPER IS SCHEDULED TO BE FURNISHED WITH THE AIR OUTLET.
17. ALL NEW DUCTWORK SIZES SHOWN ON PLANS ARE CLEAR INSIDE DIMENSIONS. CONTRACTOR SHALL ADJUST SHEET METAL SIZES AS NECESSARY TO ACCOMMODATE INTERNAL DUCT LINER, IF SPECIFIED.
18. ALL EXISTING TEMPERATURE CONTROLS THAT ARE BEING DEMOLISHED OR DISABLED AS WORK OF THIS CONTRACT SHALL BE COMPLETELY REMOVED FROM BUILDING.
19. THE CONTRACTOR SHALL CONNECT THE NEW HVAC SYSTEM TO THE OWNER'S EXISTING BUILDING CONTROL SYSTEM. REFER TO THE SPECIFICATIONS FOR ADDITIONAL REQUIREMENTS.
20. THE WORK OF SECTION 230923 SHALL INCLUDE THE FOLLOWING ELECTRICAL WORK, COMPLYING WITH REQUIREMENTS OF DIVISION 26 SECTIONS:
    - A. CONTROL WIRING BETWEEN FIELD-INSTALLED CONTROLS, INDICATING DEVICES, AND UNIT CONTROL PANELS.
    - B. INTERLOCK WIRING BETWEEN ELECTRONICALLY OPERATED EQUIPMENT UNITS AND BETWEEN EQUIPMENT AND FIELD-INSTALLED CONTROL DEVICES.
    - C. POWER SUPPLY WIRING FOR POWER SOURCE TO POWER CONNECTION ON CONTROLS AND/OR UNIT CONTROL PANELS, INCLUDING, BUT NOT LIMITED TO, AIR TERMINAL UNIT CONTROLLERS, DDC PANELS, DAMPER ACTUATORS, AND VALVE ACTUATORS.
21. CONTRACTOR SHALL HAVE THE DOCUMENTS REVIEWED COMPLETELY BY A CERTIFIED BALANCING CONTRACTOR FOR THE INCLUSION OF THE NECESSARY ADDITIONAL AIR AND HYDRONIC SYSTEM BALANCING DEVICES NOT SHOWN IN THESE DOCUMENTS FOR COMPLETE HVAC SYSTEM BALANCING. REFER TO SPECIFICATION SECTION 230593 FOR CONSTRUCTION DOCUMENT EXAMINATION REPORT.

100% CONSTRUCTION DOCUMENTS
FULLY SPRINKLERED

Revisions:	Date

VA

SPS BASEMENT ADDITION

2121 LAKE AVE., FORT WAYNE, IN 46805

ARCHITECT/ENGINEERS:

AMERICAN STRUCTUREPOINT INC.
7260 SHADELAND STATION
INDIANAPOLIS, IN 46256-3957
TEL 317.547.5580 FAX 317.543.0270
www.structurepoint.com

Ross&Baruzzini
8250 Haverstick Road
Suite 285
Indianapolis, IN 46240
317.638.8383

CONSULTANTS:

JEFFREY R. GRAMBOSKI REGISTERED PE 10400194 STATE OF INDIANA PROFESSIONAL ENGINEER
08/15/14

Drawing Title	SYMBOLS, ABBREVIATIONS & GENERAL NOTES
Approved: Project Director	
Project Title	SPS BASEMENT ADDITION
Location	2121 LAKE AVE., FORT WAYNE, IN 46805
Date	08/15/2014
Checked	SWD
Drawn	RAC
Project Number	2010.00629
Building Number	01
Drawing Number	M-000

Office of Construction and Facilities Management

VA Department of Veterans Affairs

VA FORM 08-6231

C:\Users\krtist\Documents\1724-03_Mechanical Central_krtist.rvt

8/13/2014 12:06:35 PM

GENERAL NOTES:

1. REFER TO SHEET M-000 FOR GENERAL NOTES.
2. ALL PIPE RUNOUT SIZES TO AIR TERMINAL UNIT REHEAT COILS SHALL BE 3/4" UNLESS NOTED OTHERWISE.

KEYED NOTES:

1. REMOVE EXISTING HOT WATER RADIATORS AND ALL ASSOCIATED HANGERS, SUPPORTS, AND RELOCATE AS SHOWN ON MP-101. EXTEND EXISTING BRANCH PIPING TO NEW LOCATION. EXISTING PIPING ACCESORIES AND CONTROL VALVE TO REMAIN.
2. REMOVE EXISTING INTAKE LOUVER IN EXISTING EXTERIOR WALL BELOW WINDOWS. REFER TO ARCHITECTURAL DRAWINGS FOR WALL PATCHING DETAILS.
3. REMOVE EXISTING HOT WATER RADIATOR AND ALL ASSOCIATED CONTROLS, HANGERS, SUPPORTS, AND CAP PIPING AT MAINS. TURN UNIT OVER TO OWNER.
4. REMOVE EXISTING DUCTWORK TO POINT SHOWN INCLUDING ALL HANGERS AND SUPPORTS.
5. CAP EXISTING DUCTWORK AIRTIGHT WITH SHEETMETAL.
6. REMOVE EXISTING GRILLE AND RELOCATE TO AREA SHOWN ON SHEET MH-101.

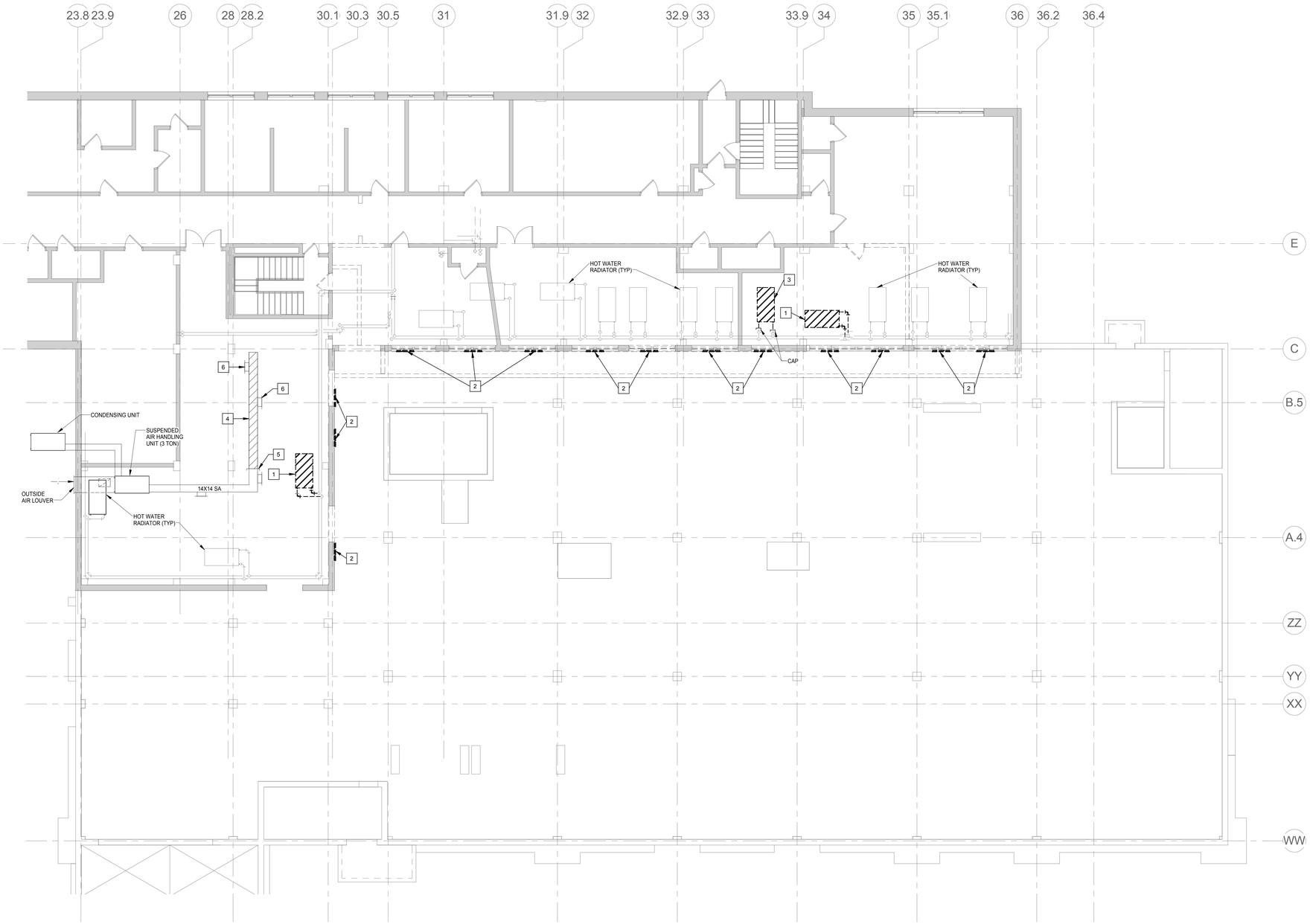

N

1 / MD-101 **BASEMENT LEVEL DEMOLITION PLAN**
1/8" = 1'-0"

100% CONSTRUCTION DOCUMENTS
FULLY SPRINKLERED

Revisions:	Date

VA

SPS BASEMENT ADDITION

2121 LAKE AVE., FORT WAYNE, IN 46805

ARCHITECT/ENGINEERS:

AMERICAN STRUCTUREPOINT INC.
7260 SHADELAND STATION
INDIANAPOLIS, IN 46256-3957
TEL 317.547.5580 FAX 317.543.0270
www.structurepoint.com

Ross&Baruzzini
8250 Haverstick Road
Suite 285
Indianapolis, IN 46240
317.638.8383

CONSULTANTS:

JEFFREY R. CRAWFORD REGISTERED PE 10404134 STATE OF INDIANA PROFESSIONAL ENGINEER
08/15/14

Drawing Title	BASEMENT LEVEL DEMOLITION PLAN
Approved: Project Director	
Project Title	SPS BASEMENT ADDITION
Location	2121 LAKE AVE., FORT WAYNE, IN 46805
Date	08/15/2014
Checked	SWD
Drawn	RAC
Project Number	2010.00629
Building Number	01
Drawing Number	MD-101

Office of Construction and Facilities Management

VA Department of Veterans Affairs

VA FORM 08-6231

C:\Users\jkribs\Documents\1724-03_Mechanical Central_jkribs.rvt
8/13/2014 12:06:38 PM

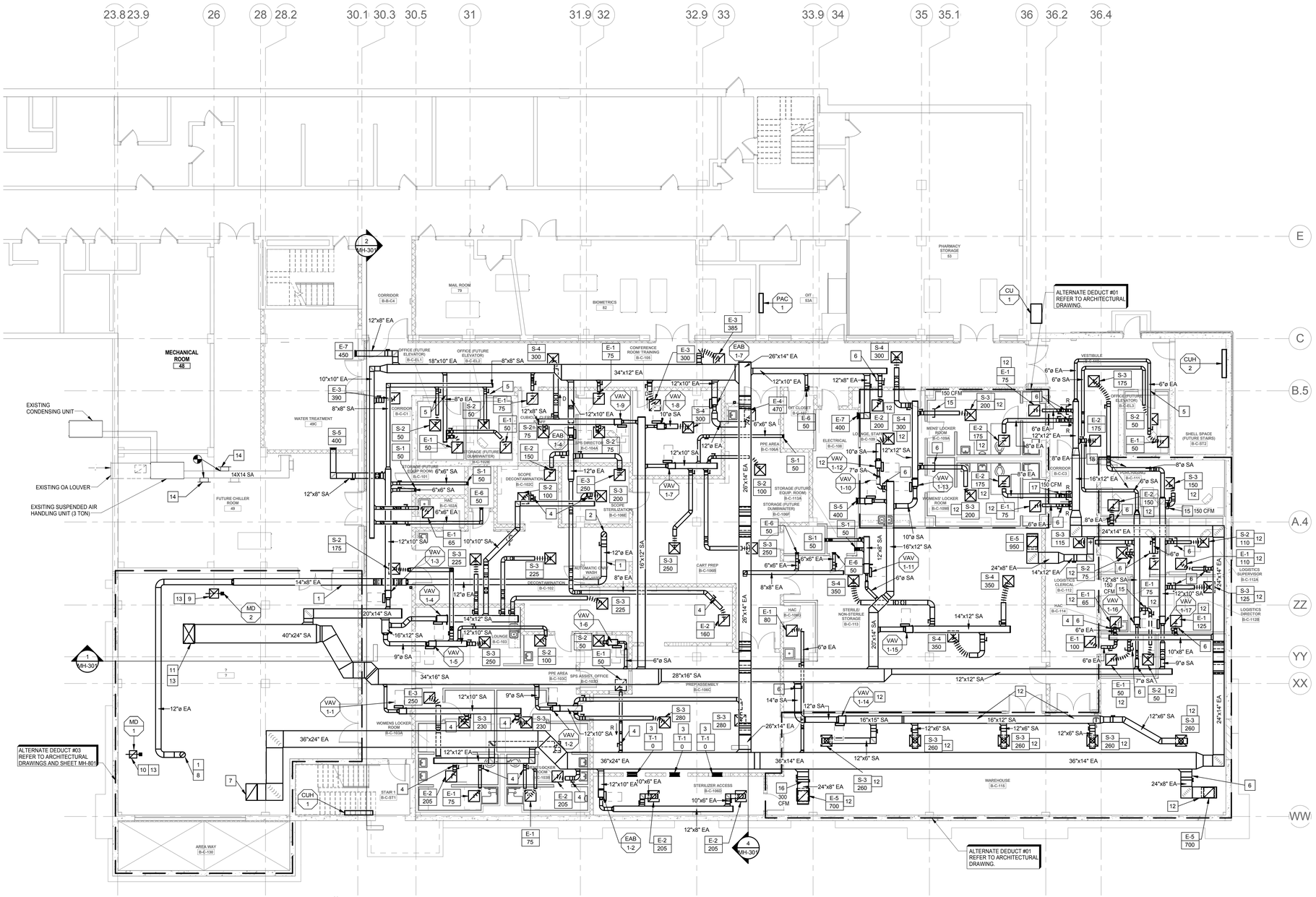

N

1 MH-101 **BASEMENT LEVEL DUCTWORK PLAN - NEW WORK**

1/8" = 1'-0"

GENERAL NOTES:

1. REFER TO SHEET M000 FOR GENERAL NOTES.
2. REFER TO PIPING PLAN FOR LOCATION OF TEMPERATURE SENSORS AND OTHER ROOM SENSORS.
3. REFER TO AIR TERMINAL UNIT SCHEDULE ON SHEET MH-611 FOR AIR INLET SIZE TO AIR TERMINAL UNITS.

KEYED NOTES:

1 ALL CART WASH EXHAUST DUCTWORK SHALL BE CONSTRUCTED OF WELDED STAINLESS STEEL.

2 CONNECT 12" ϕ EXHAUST DUCT TO CART WASH. TRANSITION TO OUTLET SIZE OF CART WASH. BALANCE FOR 500 CFM.

3 INSTALL TRANSFER GRILLES ON EACH SIDE OF WALL ABOVE STERILIZERS. BOTTOM OF GRILLE 8'-0" AFF. VERIFY LOCATION WITH STERILIZER WALL OPENING.

4 PROVIDE CONCEALED REGULATOR FOR MANUAL VOLUME DAMPERS LOCATED ABOVE GYPSUM BOARD CEILING.

5 ROUTE BRANCH DUCTWORK INTO ROOM ABOVE DOOR, NOT THRU MASONRY/CONCRETE WALL. SLOPE DOWN IN SOFFIT TO ENTER ROOM.

6 CAP DUCTWORK WHERE SHOWN IF ALTERNATE DEDUCT #01 IS ACCEPTED.

7 36" X 24" EXHAUST DUCT UP THRU ROOF TO EXHAUST FAN EF-1. REFER TO SHEET MH-102 FOR CONTINUATION.

8 12" ϕ EXHAUST DUCT UP THRU ROOF. REFER TO SHEET MH-102 FOR CONTINUATION.

9 20"x20" INTAKE DUCT UP THRU ROOF TO GRAVITY INTAKE HOOD GIH-1. TERMINATE 12" BELOW STRUCTURE IN CHILLER ROOM WITH MOTORIZED DAMPER. REFER TO SHEET MH-102 FOR CONTINUATION.

10 16"x16" EXHAUST DUCT UP THRU ROOF TO EXHAUST FAN EF-2. TERMINATE 12" BELOW STRUCTURE IN CHILLER ROOM WITH MOTORIZED DAMPER. REFER TO SHEET MH-102 FOR CONTINUATION.

11 40"x24" SUPPLY DUCT UP THRU ROOF TO AHU-1. REFER TO SHEET MH-102 FOR CONTINUATION.

12 DELETE AIR TERMNAL UNIT, DUCTWORK, AND AIR DEVICES IF ALTERNATE DEDUCT #01 IS ACCEPTED.

13 DELETE DUCTWORK IF ALTERNATE DEDUCT #03 IS ACCEPTED.

14 RELOCATED EXISTING SUPPLY GRILLE. CONNECT TO EXISTING SUPPLY MAIN.

15 OPEN END SUPPLY DUCT IF ALTERNATE DEDUCT #01 IS ACCEPTED. BALANCE FOR CFM NOTED ON PLAN.

16 OPEN END RETURN DUCT IF ALTERNATE DEDUCT #01 IS ACCEPTED. BALANCE FOR CFM NOTED ON PLAN.

17 OPEN END EXHAUST DUCT IF ALTERNATE DEDUCT #01 IS ACCEPTED. BALANCE FOR CFM NOTED ON PLAN.

18 OFFSET BRANCH DUCTWORK OVER TOP OF STORM PIPING. SEE PLUMBING DRAWINGS.

100% CONSTRUCTION DOCUMENTS
FULLY SPRINKLERED

Revisions: | Date

VA

SPS BASEMENT ADDITION

2121 LAKE AVE., FORT WAYNE, IN 46805

ARCHITECT/ENGINEERS:

AMERICAN STRUCTUREPOINT INC.
7260 SHADELAND STATION
INDIANAPOLIS, IN 46256-3957
TEL 317.547.5580 FAX 317.543.0270
www.structurepoint.com

Ross&Baruzzini
8250 Haverstick Road
Suite 285
Indianapolis, IN 46240
317.638.8383

CONSULTANTS:

JEFFREY R. CRAWFORD REGISTERED PE 10404134 STATE OF INDIANA PROFESSIONAL ENGINEER
08/15/14

Drawing Title	BASEMENT LEVEL DUCTWORK PLAN - NEW WORK
Approved: Project Director	
Project Title	SPS BASEMENT ADDITION
Location	2121 LAKE AVE., FORT WAYNE, IN 46805
Date	08/15/2014
Checked	SWD
Drawn	RAC
Project Number	2010.00629
Building Number	01
Drawing Number	MH-101

Office of Construction and Facilities Management

VA Department of Veterans Affairs

C:\Users\jkribs\Documents\1724-03_Mechanical Central_jkribs.rvt

8/13/2014 12:06:39 PM

VA FORM 08-6231

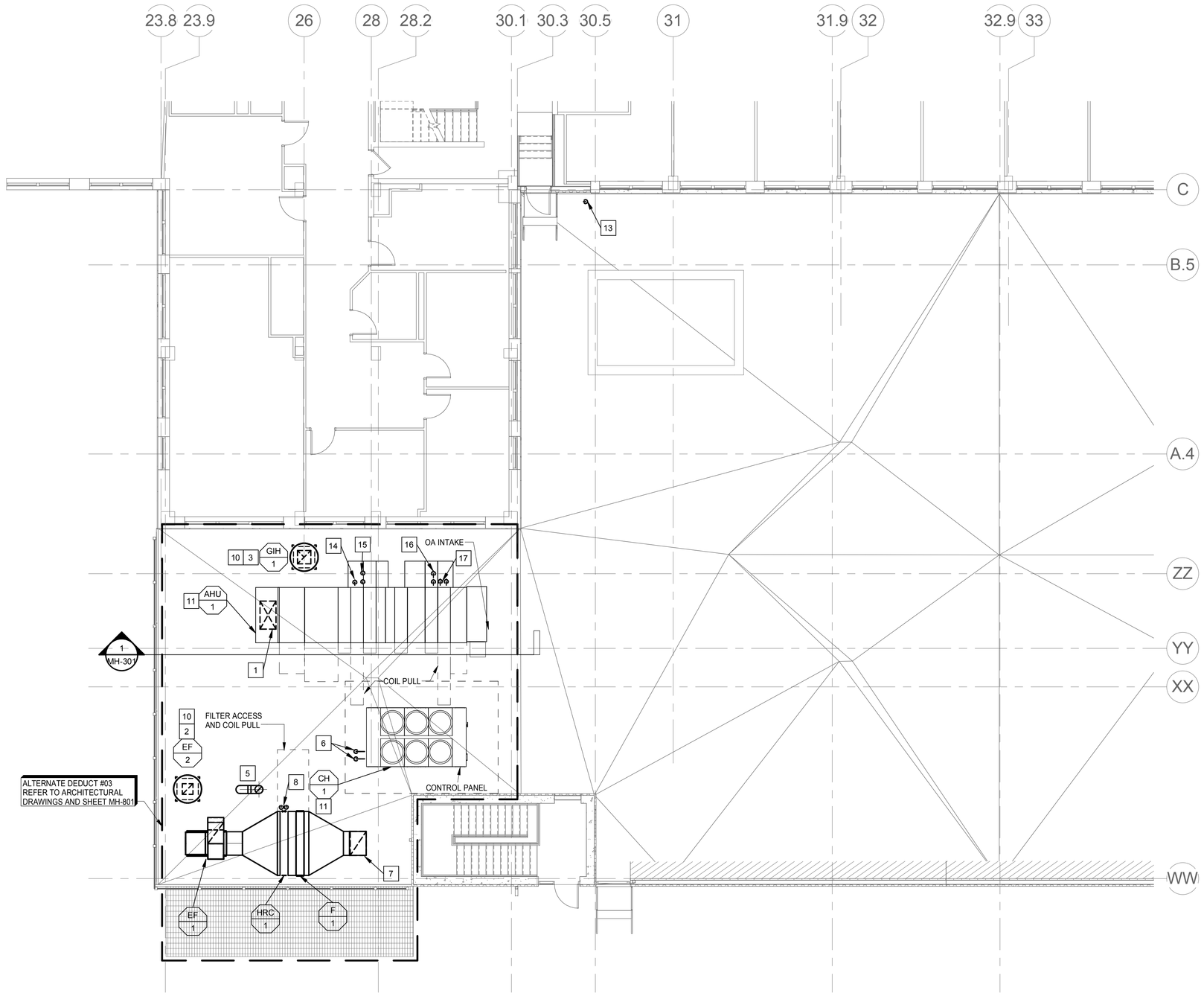

N

1 MH-102 **PARTIAL ROOF / FIRST LEVEL - NEW WORK**

1/8" = 1'-0"

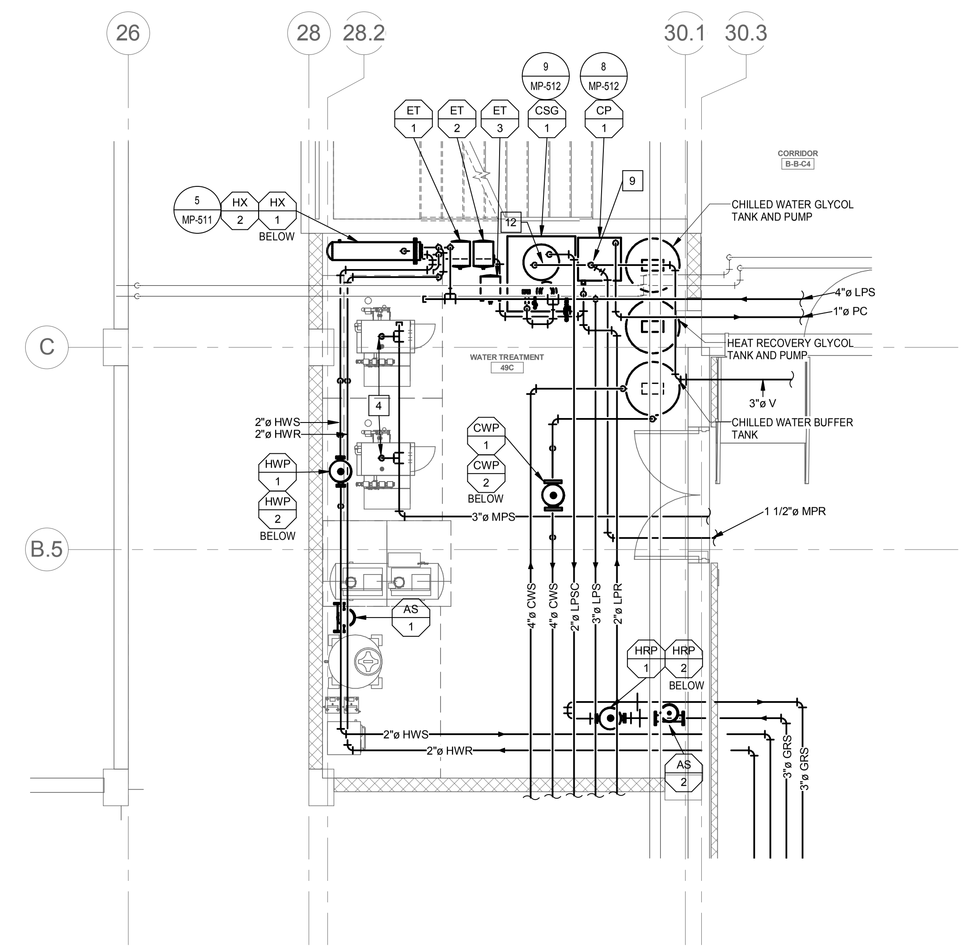

N

2 MH-102 **ENLARGED WATER TREATMENT ROOM 49C**

1/4" = 1'-0"

GENERAL NOTES:

1. REFER TO SHEET M00 FOR GENERAL NOTES.

KEYED NOTES:

1. 40"x24" SUPPLY DUCT DOWN THRU ROOF. REFER TO SHEET MH-101 FOR CONTINUATION.
2. 16"x16" EXHAUST DUCT DOWN THRU ROOF. REFER TO SHEET MH-101 FOR CONTINUATION.
3. GRAVITY INTAKE HOOD GREENHECK MODEL FGI, 2000 CFM, 20"x20" NECK, 0.15" MAX PD, WITH 12" HIGH ROOF CURB. EXTEND 20"x20" DUCT DOWN THRU ROOF. REFER TO SHEET MH-101 FOR CONTINUATION.
4. CONNECT 2" MPS TO ELECTRIC STEAM GENERATOR. PROVIDE SHUT-OFF VALVE AT CONNECTION TO UNIT.
5. 12"Ø EXHAUST DUCT DOWN THRU ROOF REFER TO SHEET MH-101 FOR CONTINUATION. TERMINATE WITH GOOSENECK A MINIMUM OF 18" ABOVE ROOF. ALL CART WASH EXHAUST DUCTWORK SHALL BE CONSTRUCTED OF WELDED STAINLESS STEEL.
6. 4" CWS AND CWR PIPING DOWN THRU ROOF. REFER TO SHEET MP-101 FOR CONTINUATION. PROVIDE PIPE CURB ASSEMBLY FOR PIPE PENETRATIONS AT ROOF. REFER TO DETAIL 5 ON SHEET MP-512.
7. 36"x24" EXHAUST DUCT DOWN THRU ROOF. REFER TO SHEET MH-101 CONTINUATION.
8. 3" GRS AND GRR DOWN THRU ROOF. REFER TO SHEET MP-101 FOR CONTINUATION. PROVIDE PIPE CURB ASSEMBLY FOR PIPE PENETRATIONS AT ROOF. REFER TO DETAIL 5 ON SHEET MP-512.
9. CONNECT STEAM VENT TO CONDENSATE PUMP AND INCREASE TO 3" IN VERTICAL RISER. CONNECT 1 1/2" MPR TO 3" STEAM VENT PIPING VERTICAL RISER AND EXTEND AS SHOWN.
10. DELETE EQUIPMENT IF ALTERNATE DEDUCT #03 IS ACCEPTED.
11. RELOCATE EQUIPMENT AS SHOWN ON SHEET MH-801 IF ALTERNATE DEDUCT #03 IS ACCEPTED.
12. CONNECT TO 2" CLEAN STEAM GENERATOR RELIEF VALVE AND PROVIDE DRIP PAN ELBOW. EXTEND 3" RELIEF VENT TO 3" STEAM VENT VERTICAL RISER AS SHOWN. REFER TO DETAIL 11 ON SHEET MP-511.
13. 3" STEAM VENT DOWN THRU ROOF. REFER TO SHEET MP-101 FOR CONTINUATION. TERMINATE 6'-0"" ABOVE ROOF. PROVIDE INSECT SCREEN ON END OF PIPING.
14. 2" LPSC DOWN THRU ROOF INSIDE AHU PIPE VESTIBULE. REFER TO SHEET MP-101 FOR CONTINUATION.
15. 4" CWS AND CWR DOWN THRU ROOF INSIDE AHU PIPE VESTIBULE. REFER TO MP-101 FOR CONTINUATION. CHILLED WATER PIPING INSIDE PIPE VESTIBULE SHALL BE HEAT TRACED. REFER TO ELECTRICAL DRAWINGS.
16. 3" LPS AND 2" LPR DOWN THRU ROOF INSIDE PRE-HEAT COIL PIPE VESTIBULE. REFER TO MP-101 FOR CONTINUATION.
17. 3" GRS AND GRR DOWN THRU ROOF INSIDE OUTDOOR AIR RECOVERY COIL PIPE VESTIBULE. REFER TO MP-101 FOR CONTINUATION.

100% CONSTRUCTION DOCUMENTS
FULLY SPRINKLERED

Revisions:	Date

VA

SPS BASEMENT ADDITION

2121 LAKE AVE., FORT WAYNE, IN 46805

ARCHITECT/ENGINEERS:

AMERICAN STRUCTUREPOINT INC.
7260 SHADELAND STATION
INDIANAPOLIS, IN 46256-3957
TEL 317.547.5580 FAX 317.543.0270
www.structurepoint.com

Ross&Baruzzini
8250 Haverstick Road
Suite 285
Indianapolis, IN 46240
317.638.8383

CONSULTANTS:

JEFFREY R. CRAWFORD REGISTERED PE 10404134 STATE OF INDIANA PROFESSIONAL ENGINEER
08/15/14

Drawing Title	ROOF PLAN & ENLARGED MECH. ROOM- NEW WORK
Approved: Project Director	
Project Title	SPS BASEMENT ADDITION
Location	2121 LAKE AVE., FORT WAYNE, IN 46805
Date	08/15/2014
Checked	SWD
Drawn	RAC
Project Number	2010.00629
Building Number	01
Drawing Number	MH-102

Office of Construction and Facilities Management

VA Department of Veterans Affairs

VA FORM 08-6231

C:\Users\krbo\Documents\1724-03_Mechanical Central_jkrbo.rvt

8/13/2014 12:06:42 PM

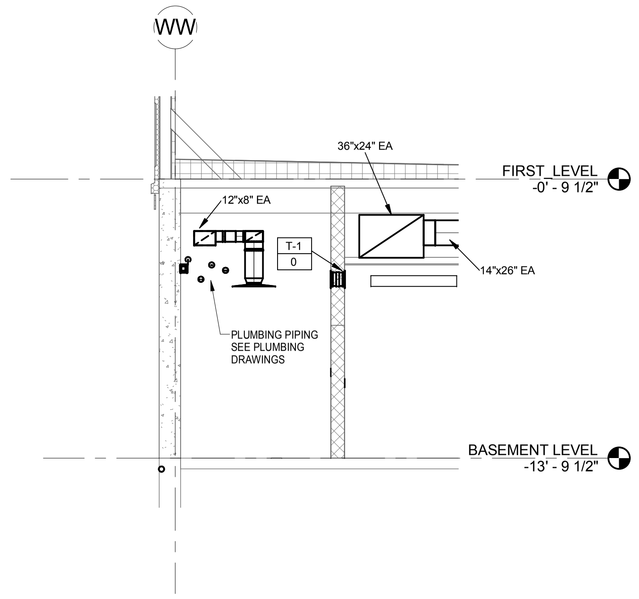

4 MH-301 **Section 24**
1/4" = 1'-0"

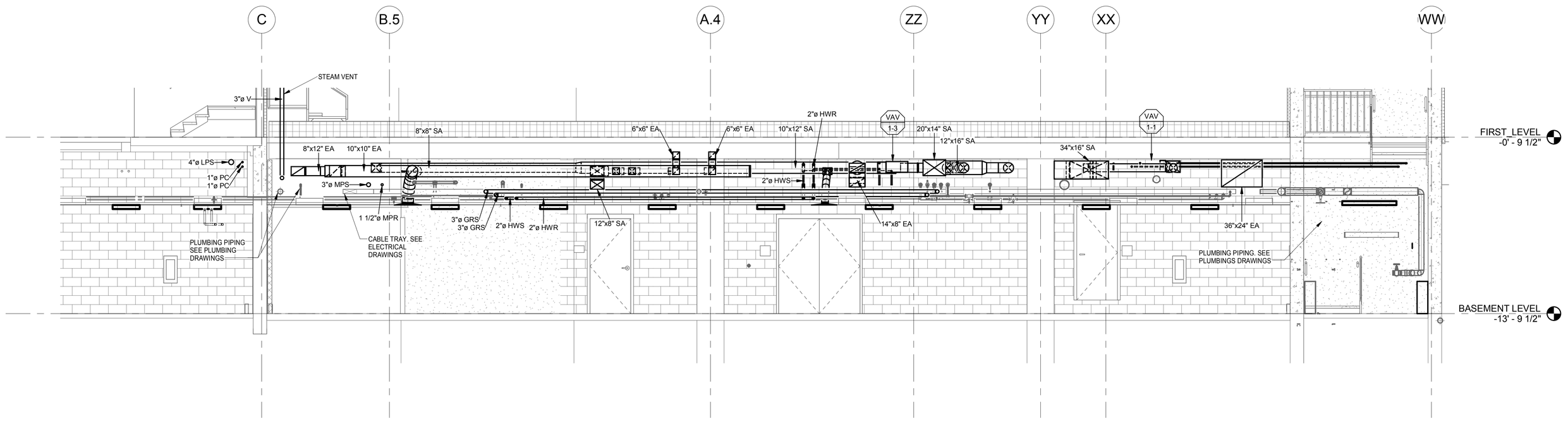

2 MH-301 **Section 17**
1/4" = 1'-0"

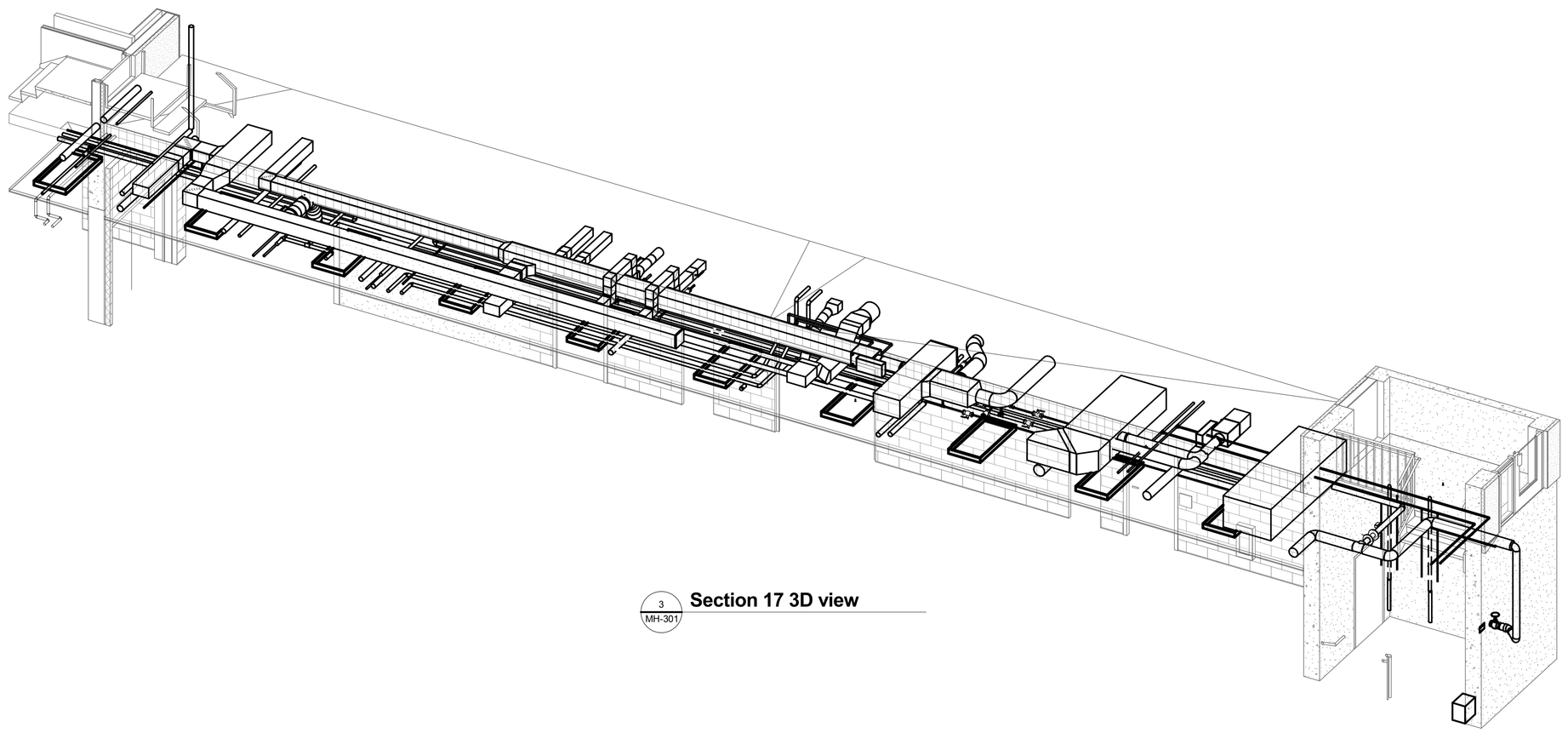

3 MH-301 **Section 17 3D view**

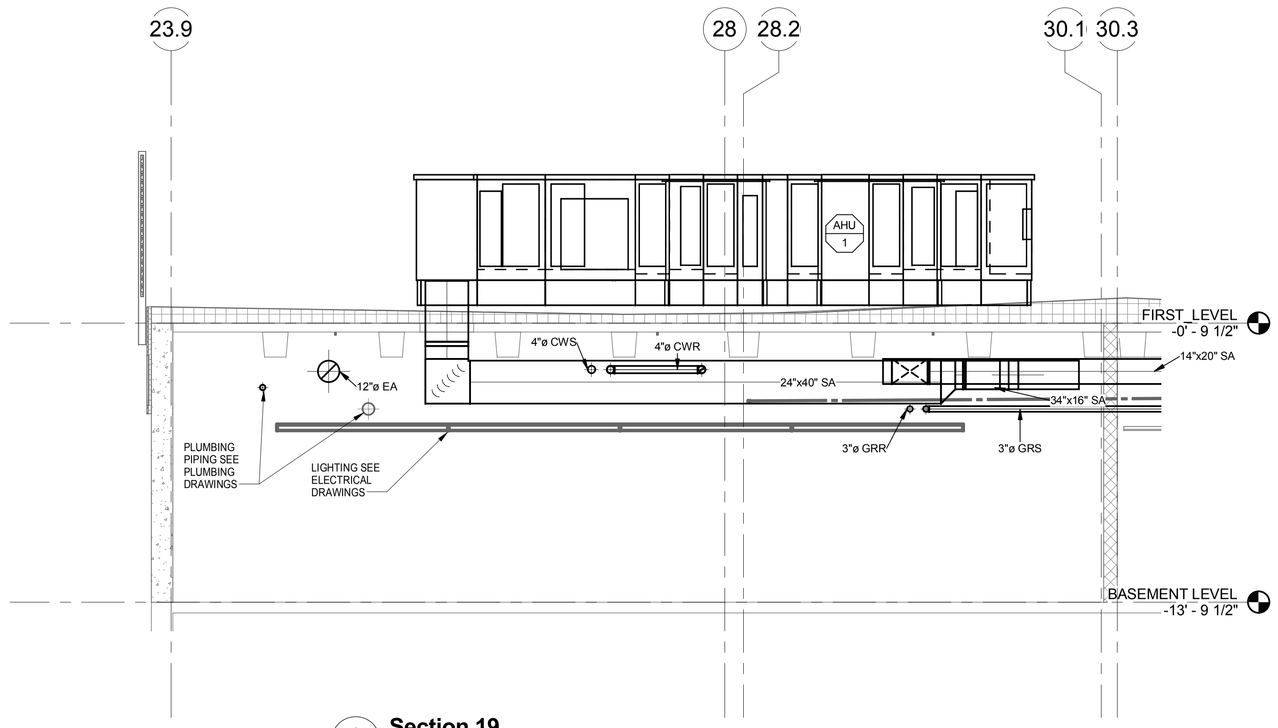

1 MH-301 **Section 19**
1/4" = 1'-0"

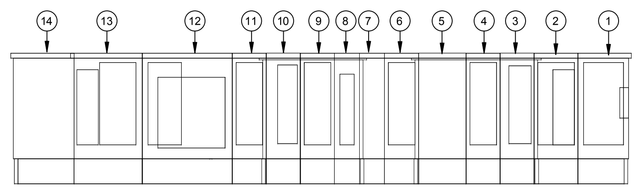

AHU COMPONENTS

1. AIR MIXING SECTION
2. MERV 8 PRE-FILTER SECTION
3. HEAT RECOVERY COIL SECTION
4. ACCESS SECTION
5. STEAM PRE-HEAT COIL
6. ACCESS SECTION
7. ACCESS SECTION
8. HUMIDIFICATION SECTION
9. ACCESS SECTION
10. CHILLED WATER COOLING COIL
11. ACCESS SECTION
12. SUPPLY FAN SECTION
13. MERV 14 FINAL FILTER SECTION
14. DISCHARGE PLENUM WITH BOTTOM OUTLET

(DISCHARGE PLENUM SHALL BE HORIZONTAL
OUTLET IF ALTERNATE DEDUCT #03 IS ACCEPTED)

5 MH-301 **AHU COMPONENTS**
N.T.S.

100% CONSTRUCTION DOCUMENTS
FULLY SPRINKLERED

Revisions:	Date

VA

SPS BASEMENT
ADDITION

2121 LAKE AVE., FORT
WAYNE, IN 46805

ARCHITECT/ENGINEERS:

AMERICAN STRUCTUREPOINT INC.
7260 SHADELAND STATION
INDIANAPOLIS, IN 46256-3957
TEL 317.547.5580 FAX 317.543.0270
www.structurepoint.com

Ross&Baruzzini
8250 Haverstick Road
Suite 285
Indianapolis, IN 46240
317.638.8383

CONSULTANTS:

JEFFREY R. GRAHFORD
REGISTERED
PE 10404134
STATE OF
INDIANA
PROFESSIONAL ENGINEER
08/15/14

Drawing Title	Project Title	Project Number
MECHANICAL SECTIONS	SPS BASEMENT ADDITION	2010.00629
Approved: Project Director	Location: 2121 LAKE AVE., FORT WAYNE, IN 46805	Building Number: 01
	Date: 08/15/2014 · Checked: SWD · Drawn: RAC	Drawing Number: MH-301

Office of
Construction
and Facilities
Management

VA Department of Veterans Affairs

C:\Users\jkribs\Documents\1724-03_Mechanical Central_jkribs.rvt
8/13/2014 12:06:46 PM

VA FORM 08-6231

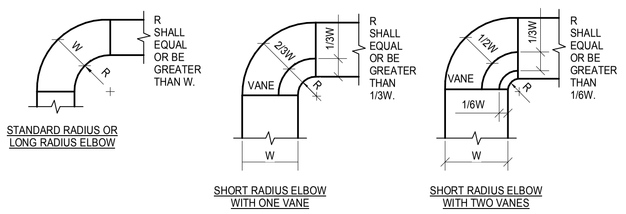

NOTE:

1. THE INTERIOR SURFACE OF ALL RADIUS ELBOWS SHALL BE MADE ROUND.
2. ALL STANDARD RADIUS ELBOWS CAN BE SUBSTITUTED WITH SHORT RADIUS ELBOWS. ALL SHORT RADIUS ELBOWS SHALL HAVE VANES. VANES SHALL BE CONSTRUCTED, SUPPORTED AND FASTENED AS RECOMMENDED BY SMACNA.

1 DUCTWORK RADIUS ELBOWS

NTS

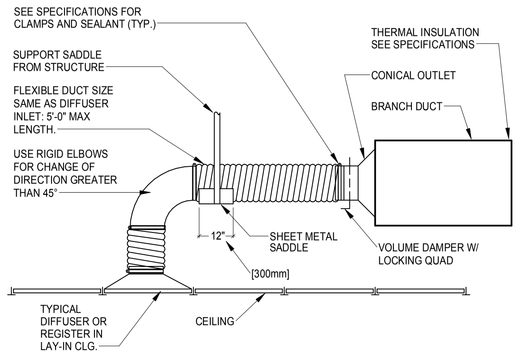

NOTE:
THE USE OF FLEXIBLE AIR DUCT CONNECTORS ARE NOT PERMITTED FOR THE DEDICATED AHU SERVING THE SURGICAL SUITE.

5 FLEXIBLE AIR DUCT CONNECTOR

NTS

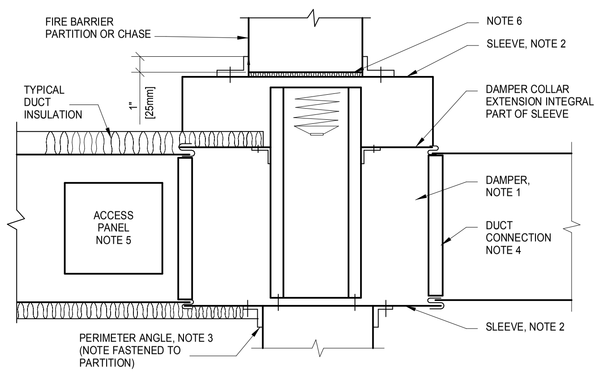

NOTE:

1. A VERTICAL DAMPER IS SHOWN. HORIZONTAL DAMPER INSTALLATION, 1S SIMILAR. FOLLOW DAMPER MANUFACTURER'S INSTRUCTIONS, INCLUDING FASTENER OPTIONS AND GAGES FOR SLEEVE AND PERIMETER ANGLES. FIRE DAMPERS MUST BE INSTALLED IN THE PARTITION OR FLOOR AND NOT OUTSIDE THE PENETRATION.
2. GALVANIZED SLEEVE: GAGE NOT LESS THAN CONNECTING DUCT. FASTEN SLEEVE TO DAMPER FRAME AND TO PERIMETER ANGLES.
3. PERIMETER ANGELS: GALVANIZED STEEL, NOT LESS THAN 1 1/2"x1 1/2" [40x40mm], 14 GAGE, TO PROVIDE 1" [25mm] MINIMUM OVERLAP OF OPENING ON ALL 4 SIDES.
4. BREAKAWAY DUCT CONNECTION: CONTRACTOR'S OPTION OF TYPES SHOWN IN SMACNA.
5. ACCESS PANELS: SIZE AND LOCATION TO PERMIT SERVICING THE FUSIBLE LINK OR LINKS.
6. PROVIDE 1/4" TO 1/2" [6 TO 15mm] CLEARANCE ON HEIGHT AND WIDTH. FILL OPEN SPACE WITH ROCK WOOL FIRESTOP FIBER.
7. ALL DUCT WORK RISERS WHICH ARE RUN EXPOSED, SUCH AS THRU ATTIC FLOORS AND MECHANICAL ROOM FLOORS, SHALL BE PROVIDED WITH 3" [75mm] HIGH CONCRETE CURB AROUND OPENING FOR DUCT.

10 SECTION THRU FIRE DAMPER INSTALLATION

NTS

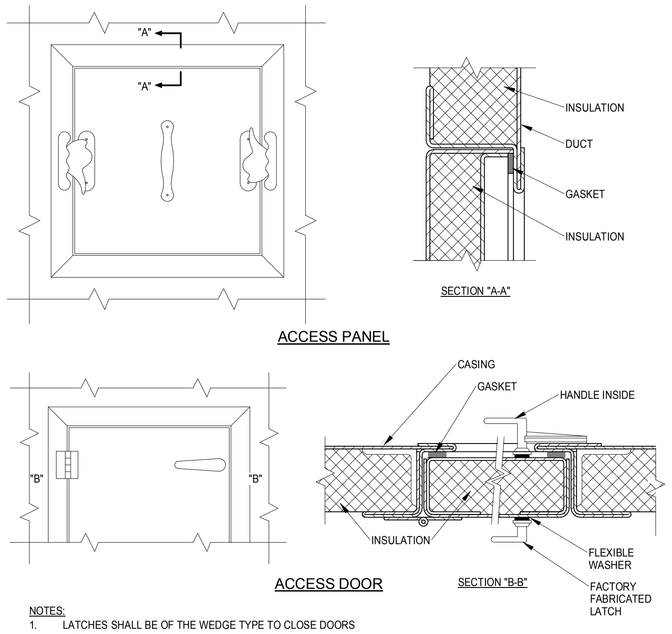

NOTES:

1. LATCHES SHALL BE OF THE WEDGE TYPE TO CLOSE DOORS TIGHTLY.
2. HINGES ON THE ACCESS DOORS SHALL HAVE NON-CORROSIVE PINS.
3. SEE SMACNA 2005, FIGURE 9-15

2 ACCESS PANEL AND DOOR DETAIL

NTS

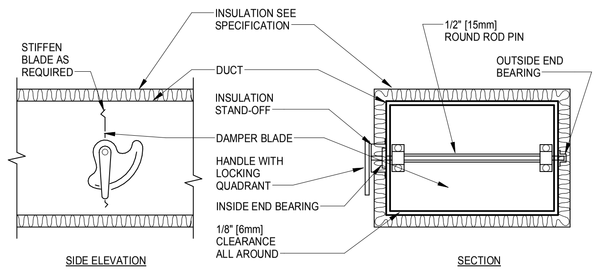

NOTE:

1. DELETE INSULATION STAND-OFF ON DUCTWORK WITHOUT EXTERIOR INSULATION.
2. DETAIL SHOWS SINGLE BLADE DAMPER. DAMPER INSTALLATION SHALL BE SIMILAR FOR MULTI-BLADE DAMPERS & ROUND DAMPERS.

6 VOLUME DAMPER DETAIL

NTS

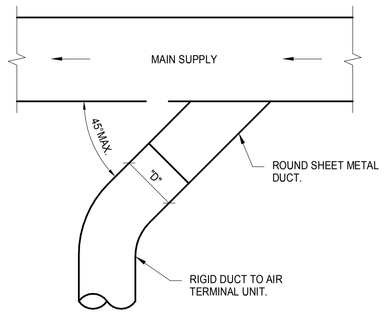

11 SUPPLY DUCT TAKEOFF - AIR TERMINAL UNIT

NTS

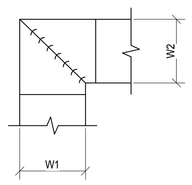

NOTE:

1. ALL VANE ELBOWS SHALL BE CONSTRUCTED AND INSTALLED AS DETAILED BY SMACNA.
2. WHEN W1 DOES NOT EQUAL W2, VANE SHALL BE SINGLE THICKNESS VANE TYPE REGARDLESS OF W DIMENSION.
3. ALL SINGLE THICKNESS VANES SHALL HAVE A 2" [50mm] RADIUS, 1 1/2" [40mm] MAXIMUM SPACE BETWEEN VANES AND A 3/4" [20mm] TRAILING EDGE.
4. WHEN W EQUALS W2 AND W1 IS GREATER THAN 20" [500mm] VANES SHALL BE DOUBLE VANE TYPE.

3 DUCTWORK SQUARE VANE ELBOWS

NTS

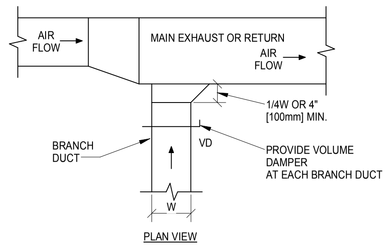

7 EXHAUST BRANCH DUCTWORK

NTS

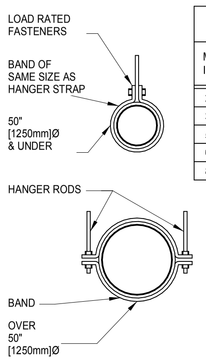

HANGER STRAPS OR RODS			
MAX. DUCT Ø IN. [mm]	QUANTITY/SIZE IN. [mm]	MAX. LOAD LBS. [kg]	MAX. SPACING IN. [mm]
26 [650]	ONE 1 [25] x 22 GA STRAP	260 [119]	144 [3600]
36 [900]	ONE 1 [25] x 18 GA STRAP	420 [190]	144 [3600]
50 [1250]	ONE 1 [25] x 16 GA STRAP	700 [317]	144 [3600]
60 [1500]	TWO 3/8 [10]Ø RODS	1320 [598]	144 [3600]
84 [2100]	TWO 1/2 [13]Ø RODS	2500 [1133]	144 [3600]

NOTE:
TABULATED DATA FROM SMACNA ALLOWS FOR DUCT REINFORCING AND INSULATION, BUT NO EXTERNAL LOAD.

8 ROUND DUCT HANGERS

NTS

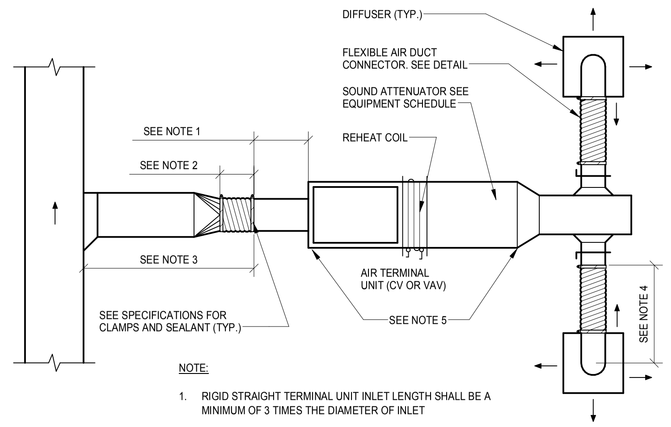

NOTE:

1. RIGID STRAIGHT TERMINAL UNIT INLET LENGTH SHALL BE A MINIMUM OF 3 TIMES THE DIAMETER OF INLET
2. A FLEXIBLE AIR DUCT CONNECTOR IS NOT MANDATORY FOR INLET TO THIS BOX, BUT ALLOWED TO ACCOMMODATE MINOR OFFSETS. MAXIMUM LENGTH 3'-0" [900mm].
3. A BRANCH DUCT SERVING AN INDIVIDUAL BOX MAY BE THE SAME SIZE AS THE BOX INLET, PROVIDED THE EQUIVALENT LENGTH OF THE BRANCH DUCT, AS SHOWN, DOES NOT EXCEED 10 FEET (3 METERS). FOR LONGER LENGTHS, INCREASE THE DUCT SIZE AND PROVIDE A DUCT TRANSITION TO MAINTAIN THE DUCT STATIC PRESSURE DROP AT OR BELOW 0.2"10'0" [1.64Pa/m].
4. FLEXIBLE AIR DUCT CONNECTORS, WHEN USED FROM TERMINAL UNIT SUPPLY AIR DUCT TO DIFFUSER, SHALL NOT EXCEED 5'-0" [1500mm]. USE RIGID ELBOWS FOR CHANGE OF DIRECTION GREATER THAN 45°.
5. COMPONENT ARRANGEMENT MAY VARY BY MANUFACTURER. PROVIDE INSULATION W/VAPOR BARRIER FOR CONNECTING DUCT SECTIONS.

4 DUCT CONNECTIONS - AIR TERMINAL UNITS

NTS

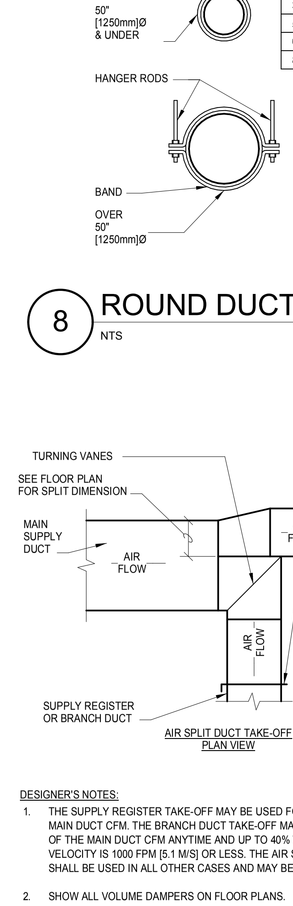

DESIGNER'S NOTES:

1. THE SUPPLY REGISTER TAKE-OFF MAY BE USED FOR UP UP TO 25% OF THE MAIN DUCT CFM. THE BRANCH DUCT TAKE-OFF MAY BE USED FOR UP TO 15% OF THE MAIN DUCT CFM ANYTIME AND UP TO 40% WHEN THE MAIN DUCT VELOCITY IS 1000 FPM [5.1 M/S] OR LESS. THE AIR SPLIT DUCT TAKE-OFF SHALL BE USED IN ALL OTHER CASES AND MAY BE USED AT ANYTIME.
2. SHOW ALL VOLUME DAMPERS ON FLOOR PLANS.

12 SUPPLY DUCTWORK TAKE-OFFS

NTS

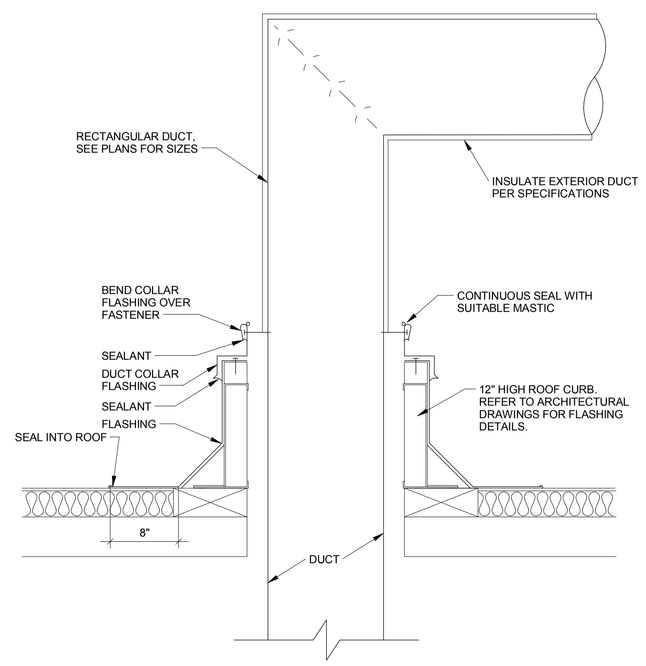

9 DUCT THROUGH ROOF DETAIL

NTS

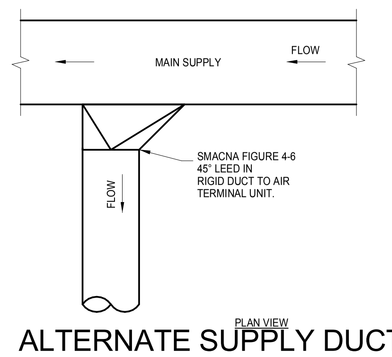

13 ALTERNATE SUPPLY DUCT TAKEOFF - AIR TERMINAL UNITS

NTS

100% CONSTRUCTION DOCUMENTS
FULLY SPRINKLERED

Revisions:	Date

VA

SPS BASEMENT ADDITION

2121 LAKE AVE., FORT WAYNE, IN 46805

ARCHITECT/ENGINEERS:

AMERICAN STRUCTUREPOINT INC.
7260 SHADELAND STATION
INDIANAPOLIS, IN 46256-3957
TEL 317.547.5580 FAX 317.543.0270
www.structurepoint.com

Ross&Baruzzini
8250 Haverstick Road
Suite 285
Indianapolis, IN 46240
317.638.8383

CONSULTANTS:

JEFFREY A. CRAWFORD REGISTERED PE 10404134 STATE OF INDIANA PROFESSIONAL ENGINEER
08/15/14

Drawing Title: MECHANICAL DUCTWORK DETAILS	Project Title: SPS BASEMENT ADDITION		Project Number: 2010.00629
Approved: Project Director	Location: 2121 LAKE AVE., FORT WAYNE, IN 46805		Building Number: 01
	Date: 08/15/2014	Checked: SWD / Drawn: RAC	Drawing Number: MH-511

Office of Construction and Facilities Management
VA Department of Veterans Affairs

VA FORM 08-6231

C:\Users\jkribs\Documents\1724-03_Mechanical Central_jkribs.rvt
8/13/2014 12:06:48 PM

AIR HANDLING UNIT SCHEDULE

PLAN MARK		LOCATION	SERVICE	MINIMUM OA (CFM)	SUPPLY FAN: TOTAL AIRFLOW (CFM)	STATIC PRESSURE: TSP (IN WC)	STATIC PRESSURE: ESP (IN WC)	TYPE	DRIVE	MAX FAN SPEED (RPM)	MOTOR SPEED (RPM)	MIN FAN EFFICIENCY	ELECTRICAL INFORMATION: HP	VOLT	PH	DISCONNECT BY	MOTOR STARTER TYPE	MOTOR STARTER BY	STEAM COIL: CAPACITY (MBH)	MAX FACE VEL (FPM)	EAT (°F)	STEAM FLOW (PPH)	PRESS (PSIG)	MAX APD (IN WC)	CHILLED WATER COIL: CAPACITY (MBH) TOTAL	SENS	MAX FACE VEL (FPM)	EAT DB (°F)	EAT WB (°F)	LAT DB (°F)	LAT WB (°F)	WATER FLOW (GPM)	EWT (°F)	ROWS	MAX PD AIR (IN WC)	MAX PD WATER (FT)
AHU	1	NEW ROOF	SPS	10,000	10,000	8.50	3.00	PLENUM	BELT	2061	1800	64	25	480	3	DIVISION 26	VFD	DIVISION 26	626.4	500	-3	626	15.00	0.50	661.1	400.3	500	91.1	74.4	55.0	54.0	124	44	8	1.00	15.00

AIR HANDLING UNIT SCHEDULE (CONT)

GLYCOL RUN-AROUND HEAT RECOVERY COIL: MAX FACE VEL (FPM)	WINTER: EAT (°F)	WINTER: LAT (°F)	WINTER: EWB (°F)	WINTER: LWB (°F)	SUMMER: EAT (°F)	SUMMER: LAT (°F)	SUMMER: EWB (°F)	SUMMER: LWB (°F)	WATER FLOW (GPM)	GLYCOL TYPE	GLYCOL SOLUTION (%)	ROWS	MAX PD: AIR (IN WC)	MAX PD: WATER (FT HD)	HUMIDIFIER TAG NO.	FILTERS: FINAL TYPE	FINAL DES. APD (IN WC)	INTERMEDIATE TYPE	INTERMEDIATE DES. APD (IN WC)	PRE- TYPE	PRE- DES. APD (IN WC)	MAX SOUND POWER RATING (2) OCTAVE BAND (HZ): 63	125	250	500	1000	2000	4000	8000	NOTES
500	-3	23.4	0	19.7	91.1	83.7	74.4	72.4	100	PROPYLENE	40	6	0.50	10.00	H-1	MERV 14	1.25	MERV 11	1.00	MERV 7	0.75	90/89	97/97	94/97	104/100	97/82	101/87	95/79	89/70	1, 3, 4, 5, 6

NOTES:
(1) SEE EQUIPMENT DATA SCHEDULE ON SHEET E-600 FOR ELECTRICAL INFORMATION.
(2) SOUND POWER LEVEL RATINGS SHOWN IN DECIBELS, REFERRED TO 10(-12) WATTS CALCULATED PER AMCA STANDARD 301, VALUES ARE DISCHARGE/INLET/RADIATED.
(3) PROVIDE WITH INVERTER-READY OR INVERTER-DUTY MOTOR FOR VARIABLE SPEED OPERATION. PROVIDE SHAFT GROUNDING RING.
(4) GLYCOL HEAT RECOVERY AND CHILLED WATER COOLING COIL CAPACITIES BASED ON 40% PROPYLENE GLYCOL.
(5) VARIABLE FREQUENCY DRIVE FOR SUPPLY FAN TO BE PROVIDED BY DIVISION 26.
(6) REVISE AHU FOR HORIZONTAL DISCHARGE ARRANGEMENT IN LIEU OF DOWN DISCHARGE ARRANGEMENT IF ALTERNATE DEDUCT #03 IS ACCEPTED. REFER TO SHEET MH-801.

SCROLL AIR COOLED CHILLER SCHEDULE

PLAN MARK		COMPRESSOR TYPE	LOCATION	SERVICE	REFRIGERANT TYPE	AMBIENT TEMPERATURE	NOMINAL TONS	EVAPORATOR: EWT (°F)	LWT (°F)	FLOW (GPM)	COOLING WPD (FT)	NUMBER OF PASSES	FOULING FACTOR	MAX NPLV (EER)	MAX FULL LOAD EFFICIENCY (EER)	MAXIMUM SOUND PRESSURE (dBA)	MAX SIZE: HEIGHT	LENGTH	WIDTH	OPERATING WEIGHT (LBS)	NOTES
CH	1	SCROLL	NEW ROOF	AHU-1	R410A	95	70	56	44	124	15.00	2	0.0001	15.3	9.8	66	7' - 0"	12' - 5"	8' - 0"	5500	1, 2

NOTES:
(1) SEE EQUIPMENT DATA SCHEDULE ON SHEET E-600 FOR ELECTRICAL INFORMATION.
(2) CAPACITY BASED ON 40% PROPYLENE GLYCOL.

FAN SCHEDULE

PLAN MARK		TYPE	LOCATION	SERVICE	DRIVE	AIRFLOW (CFM)	ESP (IN WC)	FAN SPEED (RPM)	MOTOR SPEED (RPM)	HP	MAX SND (dBA)	MAX SND POWER RATING (INLET/OUTLET) (2) OCTAVE BAND (HZ): 63	125	250	500	1000	2000	4000	8000	MAX WEIGHT (LBS)	NOTES
EF	1	UTILITY SET	NEW ROOF	SPD GENERAL EXHAUST	BELT	9,500	2.50	1403	1725	10	77	91	85	91	87	81	80	75	71	700	1,2,3,4,5
EF	2	UPBLAST	NEW ROOF	CHILLER ROOM (FUTURE)	BELT	2,000	0.75	1418	1725	0.75	63	72	77	79	72	66	64	60	55	80	1,2,6

NOTES:
(1) SEE EQUIPMENT DATA SCHEDULE ON SHEET E-600 FOR ELECTRICAL INFORMATION.
(2) SOUND POWER LEVEL RATINGS SHOWN IN DECIBELS, REFERRED TO 10(-12) WATTS CALCULATED PER AMCA STANDARD 301.
(3) PROVIDE WITH INVERTER-READY OR INVERTER-DUTY MOTOR FOR VARIABLE SPEED OPERATION. PROVIDE SHAFT GROUNDING RING.
(4) VARIABLE FREQUENCY DRIVE BY DIVISION 26.
(5) PROVIDE ROOF SUPPORT RAILS AND SPRING ISOLATORS.
(6) DELETE FAN IF DEDUCT ALTERNATE #03 IS ACCEPTED.

UNIT HEATER SCHEDULE

PLAN MARK		TYPE	ROOM NAME	ROOM NUMBER	UNIT FAN: AIRFLOW (CFM)	MOTOR HP	HOT WATER COIL: CAPACITY (MBH)	EAT (°F)	WATER FLOW	EWT (°F)	LWT (°F)	MAX WPD (FT)	NOTES
UH	1	(4)	CHILLER ROOM (FUTURE)	X25	2000	0.33	82.1	60	5.5	180	150	3.00	1, 4, 5
CUH	1	(2)	STAIR	X27	545	0.10	35.6	70	2.4	180	150	3.00	1, 2, 3
CUH	2	(2)	SHELL SPACE	B-C-ST2	545	0.10	35.6	70	2.4	180	150	3.00	1, 2, 3

NOTES:
(1) SEE EQUIPMENT DATA SCHEDULE ON SHEET E-600 FOR ELECTRICAL INFORMATION.
(2) WALL MOUNTED, INVERTED FLOW.
(3) COLOR TO BE SELECTED BY ARCHITECT.
(4) HORIZONTAL SUSPENDED TYPE WITH ADJUSTABLE DISCHARGE LOUVERS.
(5) NOT REQUIRED, IF ALTERNATE #03 IS ACCEPTED.

AIR DEVICE SCHEDULE

PLAN MARK	TYPE	NECK SIZE (IN RND)	FACE SIZE (IN x IN)	MATERIAL	FINISH	MAX TP (IN)	MAX NOISE LEVEL (NC)	MAX CFM AT LISTED CONDITION	NOTES
S-1	LOUVERED FACE	6"x6"	8"X8"	ALUMINUM	WHITE	0.10	30	120	1,4,6,7,8
S-2	SQUARE PLAQUE	6"	24"X24"	ALUMINUM	WHITE	0.10	30	110	1,3,4,6
S-3	SQUARE PLAQUE	8"	24"X24"	ALUMINUM	WHITE	0.10	30	280	1,3,4,6
S-4	SQUARE PLAQUE	10"	24"X24"	ALUMINUM	WHITE	0.10	30	420	1,3,4,6
S-5	LOUVERED FACE	12"X8"	14"X10"	ALUMINUM	WHITE	0.10	30	450	1,4,7,8
E-1	LOUVERED FACE	6"	24x24	ALUMINUM	WHITE	0.10	30	110	1,2,4,5,6,9
E-2	LOUVERED FACE	8"	24x24	ALUMINUM	WHITE	0.10	30	225	1,2,4,5,6,9
E-3	LOUVERED FACE	10"	24x24	ALUMINUM	WHITE	0.10	30	420	1,2,4,5,6,9
E-4	LOUVERED FACE	12"	24x24	ALUMINUM	WHITE	0.10	30	510	1,2,4,5,6,9
E-5	LOUVERED FACE	22"X22"	24x24	ALUMINUM	WHITE	0.10	30	1500	1,2,4,6,9
E-6	LOUVERED FACE	6"x6"	8"x8"	ALUMINUM	WHITE	0.10	30	120	1,2,4,6,7,9
E-7	LOUVERED FACE	12"X8"	14"x10"	ALUMINUM	WHITE	0.10	30	450	1,2,4,6,7,9
T-1	LOUVERED FACE	18"X6"	20"x8"	ALUMINUM	WHITE	0.02	30	250	1,2,4,6,7,9

NOTES:
(1) REFER TO MECHANICAL PLAN FOR CFM OF INDIVIDUAL DEVICES.
(2) PROVIDE FRAME WITHOUT SCREW HOLES IF AIR DEVICE IS TO BE MOUNTED AS LAY-IN CEILING DEVICE.
(3) PROVIDE DIFFUSER WITH FOUR-WAY THROW PATTERN UNLESS NOTED ON MECHANICAL PLANS. IF NOTED ON PLANS, MANUFACTURER SHALL PROVIDE DIRECTIONAL BLOW CLIPS.
(4) MAXIMUM NC LEVEL AND MAXIMUM PD (INCH W.C.) IS SCHEDULED FOR THE RATED CFM RANGE AS SCHEDULED OR RATED CFM LISTED.
(5) PROVIDE WITH BACKPAN WITH SQUARE TO ROUND ADAPTER TO ACCOMMODATE SCHEDULED NECK SIZE.
(6) COORDINATE BORDER FRAME WITH ARCHITECTURAL PLANS.
(7) BORDER TYPE: SIDEWALL TYPE
(8) DOUBLE DEFLECTION ADJUSTABLE BLADES, 3/4" SPACING, FRONT BLADES PARALLEL TO LONG DIMENSION.
(9) 3/4" BLADE SPACING, 35 DEGREE ANGLE.

AIR TERMINAL UNIT SCHEDULE

PLAN MARK		TYPE	INLET DUCT SIZE (IN)	PRIMARY AIRFLOW (CFM): MAX	MIN	INLET STATIC PRESSURE (IN WC)	OUTLET DUCT SIZE, LxW (IN)	MAX PRESSURE DROP (IN WC) (NOTE 1)	AUXILIARY HOT WATER HEATING COIL: AIRFLOW (CFM)	CAPACITY (MBH)	EAT (°F)	LAT (°F)	EWT (°F)	FLOW (GPM)	ROWS	MAX WPD (FT HD)	MAX APD (IN WC)	CONTROL VALVE	MAX NC LEVEL @ MAX CFM: DISCHARGE	RADIATED	NOTES
VAV	1-1	SINGLE DUCT PRESSURE INDEPENDENT	7"	460	460	1.50	12x10	0.75	460	15.9	55	87	180	0.8	(NOTE 2)	5.00	0.50	2-WAY	35	35	3
VAV	1-2	SINGLE DUCT PRESSURE INDEPENDENT	7"	560	560	1.50	12x10	0.75	560	17.5	55	84	180	0.9	(NOTE 2)	5.00	0.50	2-WAY	35	35	3
VAV	1-3	SINGLE DUCT PRESSURE INDEPENDENT	8"	600	600	1.50	12x10	0.75	600	18.8	55	84	180	0.9	(NOTE 2)	5.00	0.50	2-WAY	35	35	3
VAV	1-4	SINGLE DUCT PRESSURE INDEPENDENT	10"	975	975	1.50	14x12	0.75	975	30.5	55	84	138	1.5	(NOTE 2)	0.00	0.50	--	35	35	3
VAV	1-5	SINGLE DUCT PRESSURE INDEPENDENT	7"	525	525	1.50	12x10	0.75	525	16.4	55	84	180	0.8	(NOTE 2)	5.00	0.50	2-WAY	35	35	3
VAV	1-6	SINGLE DUCT PRESSURE INDEPENDENT	4"	50	50	1.50	12x8	0.75	50	1.6	55	84	180	0.1	(NOTE 2)	5.00	0.50	2-WAY	35	35	3
VAV	1-7	SINGLE DUCT PRESSURE INDEPENDENT	8"	650	650	1.50	12x10	0.75	650	18.8	55	84	180	0.9	(NOTE 2)	5.00	0.50	2-WAY	35	35	3
VAV	1-8	SINGLE DUCT PRESSURE INDEPENDENT	5"	300	300	1.50	12x8	0.75	300	9.4	55	84	180	0.5	(NOTE 2)	5.00	0.50	2-WAY	35	35	3
VAV	1-9	SINGLE DUCT PRESSURE INDEPENDENT	6"	450	450	1.50	12x8	0.75	450	15.6	55	87	180	0.8	(NOTE 2)	5.00	0.50	2-WAY	35	35	3
VAV	1-10	SINGLE DUCT PRESSURE INDEPENDENT	6"	400	400	1.50	12x8	0.75	400	12.5	55	84	180	0.6	(NOTE 2)	5.00	0.50	2-WAY	35	35	3
VAV	1-11	SINGLE DUCT PRESSURE INDEPENDENT	4"	100	100	1.50	12x8	0.75	100	3.1	55	84	180	0.2	(NOTE 2)	5.00	0.50	2-WAY	35	35	3
VAV	1-12	SINGLE DUCT PRESSURE INDEPENDENT	5"	300	300	1.50	12x8	0.75	300	9.4	55	84	180	0.5	(NOTE 2)	5.00	0.50	2-WAY	35	35	3, 4
VAV	1-13	SINGLE DUCT PRESSURE INDEPENDENT	8"	700	700	1.50	12x10	0.75	700	21.9	55	84	180	1.1	(NOTE 2)	5.00	0.50	2-WAY	35	35	3, 5
VAV	1-14	SINGLE DUCT PRESSURE INDEPENDENT	12"	1300	1300	1.50	16x15	0.75	1300	44.9	55	87	138	2.2	(NOTE 2)	0.00	0.50	--	35	35	3, 4
VAV	1-15	SINGLE DUCT PRESSURE INDEPENDENT	10"	1050	1050	1.50	14x12	0.75	1050	32.9	55	84	138	1.6	(NOTE 2)	0.00	0.50	--	35	35	3
VAV	1-16	SINGLE DUCT PRESSURE INDEPENDENT	5"	290	290	1.50	12x8	0.75	290	9.1	55	84	180	0.5	(NOTE 2)	5.00	0.50	2-WAY	35	35	3, 5
VAV	1-17	SINGLE DUCT PRESSURE INDEPENDENT	7"	560	560	1.50	12x10	0.75	560	19.4	55	87	180	1.0	(NOTE 2)	5.00	0.50	2-WAY	35	35	3, 5
EAB	1-2	SINGLE DUCT PRESSURE INDEPENDENT	6"	410	410	1.50	12x8	0.50		--							0.00	--	35	35	3, 6
EAB	1-4	SINGLE DUCT PRESSURE INDEPENDENT	7"	560	560	1.50	12x10	0.50		--							0.00	--	35	35	3, 6
EAB	1-7	SINGLE DUCT PRESSURE INDEPENDENT	7"	470	470	1.50	12x10	0.50		--							0.00	--	35	35	3, 6

NOTES:
(1) MAX TOTAL PRESSURE DROP SHALL INCLUDE BOX AND REHEAT COIL (WHERE APPLICABLE).
(2) PROVIDE THE NUMBERS OF COIL ROWS AS REQUIRED TO MEET SCHEDULED PERFORMANCE AND STILL FALL WITHIN REHEAT COIL PRESSURE DROP LIMITATION.
(3) PROVIDE WITH BOTTOM ACCESS DOOR PER SPECIFICATIONS.
(4) DELETE AIR TERMINAL UNIT IF DEDUCT ALTERNATE #01 IS ACCEPTED.
(5) REDUCE SCHEDULED MAXIMUM AND MINIMUM AIRFLOWS NOTED IN SCHEDULE IF DEDUCT ALTERNATE #01 IS ACCEPTED.
(6) EXHAUST AIR TERMINAL UNIT WITHOUT HOT WATER REHEAT COIL.

AIR FILTER SCHEDULE

PLAN MARK		LOCATION: ROOM NAME	ROOM NUMBER	SERVICE	AIRFLOW (CFM)	MAX FACE VEL (FPM)	MERV RATING	HOUSING TYPE	FILTER BANK: TYPE	MAX WIDTH	FILTER BANK MAX HEIGHT	FILTER BANK DEPTH	FILTER BANK QTY	ARRANGEMENT	PRESSURE DROP (IN WG): INITIAL	DESIGN	FINAL	NOTES
F	1	ROOF	-	HRC-1	9,500	425	MERV 8	SIDE SERVICE	MERV 8	6' - 0"	4' - 0"	2' - 3"	6	3 WIDE BY 2 HIGH	0.20	0.75	0.75	1

NOTES:
(1) 24" x 24" x 4" FILTERS

MOTORIZED DAMPER SCHEDULE

PLAN MARK		TYPE	APPLICATION	SIZE (INxIN)	LOCATION	NOTES
MD	1	1	GIH-1 INTAKE	20x20	CHILLER ROOM (FUTURE) B-C-100	2,3,4
MD	2	1	EF-3 EXHAUST	16x16	CHILLER ROOM (FUTURE) B-C-100	2,3,4

NOTES:
(1) OPPOSED BLADE OPERATION, 2-POSITION, SPRING RETURN.
(2) DUCT MOUNTED.
(3) ACTUATOR SHALL BE FURNISHED AND INSTALLED AS WORK OF SPEC SECTION 230900.
(4) ACTUATOR SHALL FAIL IN CLOSED POSITION.

100% CONSTRUCTION DOCUMENTS
FULLY SPRINKLERED

Revisions: Date

VA

SPS BASEMENT ADDITION

2121 LAKE AVE., FORT WAYNE, IN 46805

ARCHITECT/ENGINEERS:

AMERICAN STRUCTUREPOINT INC.
7260 SHADELAND STATION
INDIANAPOLIS, IN 46256-3957
TEL 317.547.5580 FAX 317.543.0270
www.structurepoint.com

Ross&Baruzzini
8250 Haverstick Road
Suite 285
Indianapolis, IN 46240
317.638.8383

CONSULTANTS:

JEFFREY R. CRAWFORD REGISTERED PE 10404134 STATE OF INDIANA PROFESSIONAL ENGINEER
08/15/14

Drawing Title: MECHANICAL SCHEDULES

Approved: Project Director

Project Title: SPS BASEMENT ADDITION

Location: 2121 LAKE AVE., FORT WAYNE, IN 46805

Date: 08/15/2014 | Checked: SWD | Drawn: RAC

Project Number: 2010.00629

Building Number: 01

Drawing Number: MH-611

Office of Construction and Facilities Management

VA Department of Veterans Affairs

VA FORM 08-6231

C:\Users\jkrbs\Documents\1724-03_Mechanical Central_jkrbs.rvt

8/13/2014 12:06:51 PM

EXPANSION TANK SCHEDULE

PLAN MARK		TYPE	LOCATION		SERVICE	NOMINAL SIZE		ORIENTATION	CAPACITY (GAL)		MIN REQUIRED FILL PRESSURE (PSIG)	NOTES
			ROOM NAME	ROOM NUMBER		DIAMETER	LENGTH		TANK	ACCEPT		
ET	1	PRESSURIZED	WATER TREATMENT	49C	HEATING HOT WATER	1' – 0"	2' – 2"	HORIZONTAL	10.9	2.5	12	
ET	2	PRESSURIZED	WATER TREATMENT	49C	HEAT RECOVERY	1' – 0"	2' – 2"	HORIZONTAL	10.9	2.5	12	
ET	3	PRESSURIZED	WATER TREATMENT	49C	CHILLED WATER	1' – 0"	2' – 2"	HORIZONTAL	10.9	2.5	12	

AIR SEPARATOR SCHEDULE

PLAN MARK		TYPE	LOCATION		SERVICE	FLOW (GPM)	MAX WATER PD (FT)	NOTES
			ROOM NAME	ROOM NUMBER				
AS	1	NOTE 1	WATER TREATMENT	49C	HEATING HOT WATER	25	2.0	
AS	2	NOTE 2	WATER TREATMENT	49C	HEAT RECOVERY	100	2.0	

NOTES:
(1) 2" COALESCING AIR/DIRT TYPE SEPARATOR
(2) 3" COALESCING AIR/DIRT TYPE SEPARATOR

HEAT EXCHANGER SCHEDULE

PLAN MARK		TYPE	LOCATION		SERVICE	SHELL SIDE							TUBE SIDE			NOTES
			ROOM NAME	ROOM NUMBER		FLUID	CAPACITY (MBH)	FOULING FACTOR	EWT (°F)	LWT (F)	FLOW (GPM)	MAX WPD (FT)	FLUID	STEAM PRESSURE	FLOW (LB/HR)	
HX	1	U–TUBE	WATER TREATMENT	49C	SPD ADDITION	WATER	500	0.0005	150	180	25	10.00	STEAM	15	500	
HX	2	U–TUBE	WATER TREATMENT	49C	SPD ADDITION	WATER	500	0.0005	150	180	25	10.00	STEAM	15	500	

NOTES:
(1) ONE HEAT EXCHANGER IS BACK-UP.

HUMIDIFIER SCHEDULE

PLAN MARK		TYPE	LOCATION		SERVICE	SUPPLY STEAM LOAD (LB/HR)	SUPPLY STEAM PRESSURE (PSIG)	EAT		LAT		CFM	DUCT SIZE (IN)	MANIFOLD LENGTH (IN)	NO OF MANIFOLDS	DISPERSION GRID	MAX ABSORPTION DISTANCE	NOTES
			ROOM NAME	ROOM NUMBER				DB	RH	DB	RH							
H	1	MULTI–GRID	CHILLER ROOM	B–C–100	AHU–1	219	15.00	55	10	55	60	10,000 CFM	(NOTE 1)	(NOTE 1)	(NOTE 1)	(NOTE 1)	1'–0"	1

NOTES:
(1) PRIMARY HUMIDIFIER DISPERSION GRID SHALL BE INSTALLED IN AIR HANDLING UNIT CASING. VERIFY SIZE OF MANIFOLD AND QUANTITY OF DISPERSION TUBES WITH APPROVED AHU MANUFACTURERS SHOP DRAWING.

UNFIRED CLEAN STEAM GENERATOR

PLAN MARK		SERVICE	OUTPUT CAPACITY (LB/HR)	OUTLET PRESSURE (PSI)	INLET PRESSURE (PSI)	INLET CAPACITY (LB/HR)	FOULING FACTOR	NOTES
CSG	1	AHU–1 HUMIDIFIER	220	5	15.00	270.00	0.0005	1,2,3

NOTES:
(1) STAINLESS STEEL CONSTRUCTION.
(2) UNIT SHALL HAVE FACTORY SKID WITH BLOWDOWN AFTER COOLER AND REALTED CONTROLS.
(3) PROVIDE WITH 120V TO 24V TRANSFORMER AND UNIT MOUNTED DISCONNECT SWITCH.

PUMP SCHEDULE

PLAN MARK		TYPE	LOCATION		SERVICE	WATER FLOW (GPM)	TDH (FT)	NPSH REQD (FT)	MIN EFF (%)	MOTOR SPEED (RPM)	HP	NOTES
			ROOM NAME	ROOM NUMBER								
CWP	1	IN–LINE	WATER TREATMENT	49C	CHILLED WATER	124	75	5.9	60	1750	7.5	1,3,5
CWP	2	IN–LINE	WATER TREATMENT	49C	CHILLED WATER	124	75	5.9	60	1750	7.5	1,3,5
HRP	1	IN–LINE	WATER TREATMENT	49C	HEAT RECOVERY	100	60	8.3	55	1750	3.0	1,3,5
HRP	2	IN–LINE	WATER TREATMENT	49C	HEAT RECOVERY	100	60	8.3	55	1750	3.0	1,3,5
HWP	1	IN–LINE	WATER TREATMENT	49C	HEATING HOT WATER	25	40	3.5	44	1750	1.5	1,2,4,5
HWP	2	IN–LINE	WATER TREATMENT	49C	HEATING HOT WATER	25	40	3.5	44	1750	1.5	1,2,4,5

NOTES:
(1) SEE EQUIPMENT DATA SCHEDULE ON SHEET E-600 FOR ELECTRICAL INFORMATION.
(2) WATER
(3) 40% PROPYLENE GLYCOL SOLUTION.
(4) PROVIDE WITH INVERTER - READY OR INVERTER DUTY MOTOR FOR VARIABLE SPEED OPERATION. PROVIDE SHAFT GROUNDING RING.
(5) PUMPS ARE DUTY/STANDBY.

CONDENSATE PUMP SCHEDULE

PLAN MARK	PLAN MARK	LOCATION		TYPE	GPM	DISCH. PRESS (PSIG)	HP (EACH)	RPM	RECEIVER CAPACITY (GALLONS)	NOTES
		ROOM NAME	ROOM NUMBER							
CP	1	WATER TREATMENT	49C	DUPLEX	9.0	25.00	0.75	1750	14.0	1,2

NOTES:
(1) SEE EQUIPMENT DATA SCHEDULE ON SHEET E-600 FOR ELECTRICAL INFORMATION.
(2) PROVIDE WITH FACTORY MOUNTED CONTROL PANEL AND SINGLE POINT POWER CONNECTION. CONTROLS SHALL INCLUDE STARTER, DISCONNECT, WATER LEVEL CONTROL, AND THERMAL PROTECTION.

CHILLED WATER BUFFER TANK SCHEDULE

PLAN MARK		TYPE	LOCATION	SERVICE	GALLON CAPACITY	FLOW (GPM)	SIZE (IN) LxDIA.	NOTES
CWT	1	VERTICAL	WATER TREATMENT 49C	CH–1	200	124	72"X30"Ø	

HEAT RECOVERY COIL SCHEDULE

PLAN MARK		SYSTEM	CFM	DUCT SIZE WxH (IN)	MAX FACE VELOCITY (FPM)	MAX SP LOSS (IN WC)	SUMMER PERFORMANCE										WINTER PERFORMANCE									
							EXHAUST AIR				CIRCULATING FLUID				MIN TOTAL MBH	NOTES	EXHAUST AIR				CIRCULATING FLUID				MIN TOTAL MBH	NOTES
							EAT		LAT					MAX WPD (FT HD)			EAT		LAT					MAX WPD (FT HD)		
							DB (°F)	WB (°F)	DB (°F)	WB (°F)	GPM	EWT (°F)	LWT (°F)				DB (°F)	WB (°F)	DB (°F)	WB (°F)	GPM	EWT (°F)	LWT (°F)			
HRC	1	EF–1	9500	72x48	500	0.50	75.0	62.5	82.6	65.1	100	84.1	82.8	10	81.9	1,3	70.0	53.0	43.8	40.8	100	31.4	37.9	10	286.14	2,3

NOTES:
(1) SUMMER CONDITIONS
(2) WINTER CONDITIONS
(3) CAPACITY BASED ON 40% PROPYLENE GLYCOL

VIBRATION ISOLATION SCHEDULE

PLAN MARK		EQUIPMENT	ISOLATOR TYPE (NOTE 1)	MINIMUM STATIC DEFLECTION (IN)	NOTES
AHU	1	SUPPLY FAN	SS	1.0	3
CH	1	CHILLER	HS	1.0	4
CWP	1	CHILLED WATER PUMP	H	1.0	2
CWP	2	CHILLED WATER PUMP	H	1.0	2
EF	1	UTILITY SET EXHUAST FAN	SS	1.0	4
HRP	1	HEAT RECOVERY PUMPS	H	1.0	2
HRP	2	HEAT RECOVERY PUMPS	H	1.0	2
HWP	1	HEATING HW PUMP	H	1.0	2
HWP	2	HEATING HW PUMP	H	1.0	2

NOTES:
(1) REFER TO SPEC SECTION 23 05 41 FOR ISOLATER TYPE DESCRIPTION.
(2) EQUIPMENT SUSPENDED FROM STRUCTURE.
(3) INTERNAL ISOLATORS PROVIDED BY AHU MANUFACTURER.
(4) LOCATE ISOLATORS UNDER UNIT EQUIPMENT BASE.

PACKAGED AIR CONDITIONING UNIT SCHEDULE WITH AIR–COOLED CONDENSING UNIT

PLAN MARK		MANUFACTURER	MODEL	SERVICE	REFRIGERANT	TOT CAP (MBH)	SENSIBLE (MBH)	EAT		CFM (FAN ON HIGH)	UNIT WEIGHT (LBS)	VOLTAGE	PHASE	MIN EER	AIR COOLED CONDENSING UNIT					NOTES
								RH	DB						PLAN MARK	MODEL NO.	AMBIENT TEMPERATURE (MAX/MIN, °F)	VOLT	PHASE	
PAC	1	PANASONIC	CS–S18NKUA	OIT 53A	R–410A	17100.0	17100.0	50	75	650	26	208	1	18	CU–1	CU–S18NKUA	105	208	1	1,2,3,4

NOTES:
(1) PROVIDE WITH MANUFACTURER'S PRE-CHARGED LINE SETS, CONNECTION CABLES, AND ALL RECOMMENDED ACCESSORIES FOR MOUNTING LOCATIONS. FINAL SIZING OF REFRIGERANT PIPING IS RESPONSIBILITY OF MANUFACTURER BASED ON INSTALLATION REARRANGEMENTS.
(2) PROVIDE WITH FACTORY INSTALLED CONTROLS, AND THERMOSTAT; NO CONTROL INTERFACE WITH BUILDING EMCS.
(3) PROVIDE LOW AMBIENT KIT FOR OPERATION DOWN TO 0 DEGREES F.
(4) PROVIDE CONDENSATE PUMP.

100% CONSTRUCTION DOCUMENTS
FULLY SPRINKLERED

Revisions: Date

VA

SPS BASEMENT ADDITION

2121 LAKE AVE., FORT WAYNE, IN 46805

ARCHITECT/ENGINEERS:

AMERICAN STRUCTUREPOINT INC.
7260 SHADELAND STATION
INDIANAPOLIS, IN 46256-3957
TEL 317.547.5580 FAX 317.543.0270
www.structurepoint.com

Ross&Baruzzini
8250 Haverstick Road
Suite 285
Indianapolis, IN 46240
317.638.8383

CONSULTANTS:

JEFFREY R. CRAWFORD REGISTERED PE 10404134 STATE OF INDIANA PROFESSIONAL ENGINEER
08/15/14

Drawing Title: MECHANICAL SCHEDULES

Approved: Project Director

Project Title: SPS BASEMENT ADDITION

Location: 2121 LAKE AVE., FORT WAYNE, IN 46805

Date: 08/15/2014 | Checked: SWD | Drawn: RAC

Project Number: 2010.00629

Building Number: 01

Drawing Number: MH-612

Office of Construction and Facilities Management

VA Department of Veterans Affairs

VA FORM 08-6231

C:\Users\jkrbs\Documents\1724-03_Mechanical Central_jkrbs.rvt

8/13/2014 12:06:54 PM

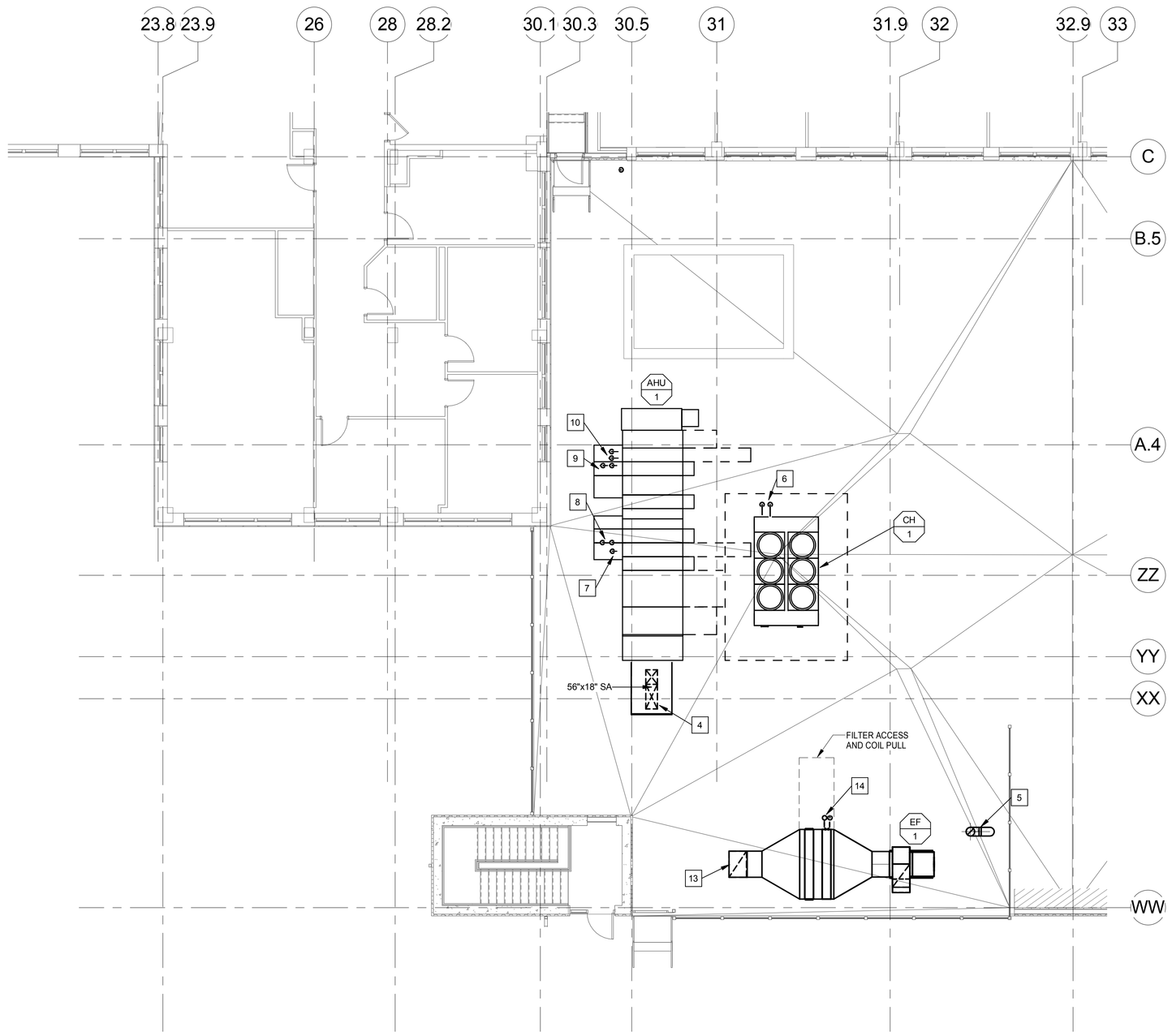

N

1 / MH-801 **PARTIAL ROOF / FIRST LEVEL - NEW WORK (IF DEDUCT ALTERNATE #03 IS ACCEPTED**

1/8" = 1'-0"

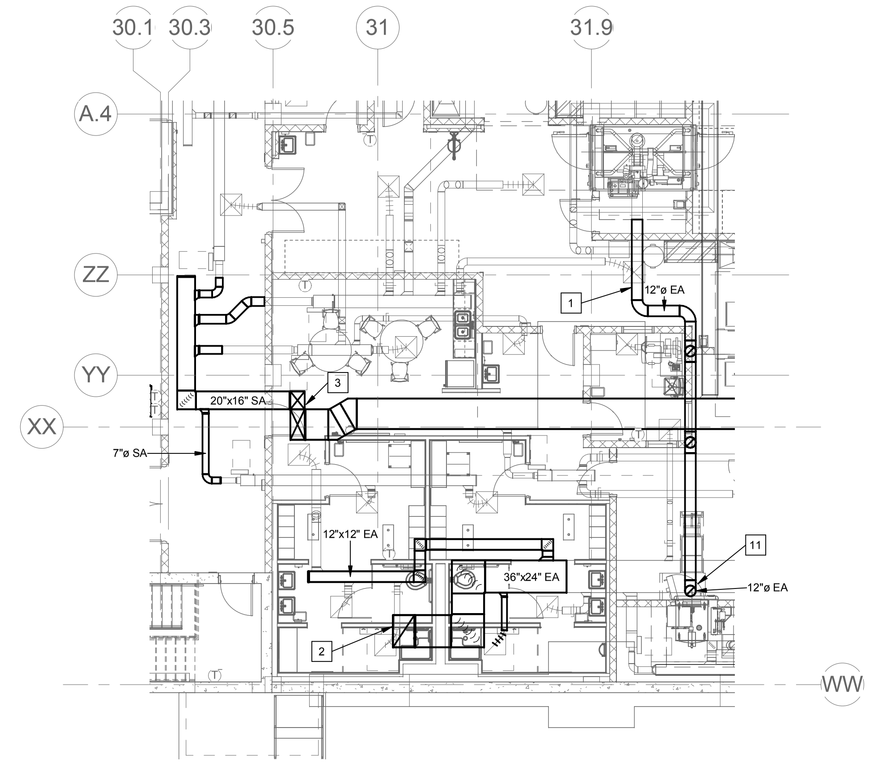

N

2 / MH-801 **PARTIAL DUCTWORK FLOOR PLAN - (IF DEDUCT ALTERNATE #03 IS ACCEPTED)**

1/8" = 1'-0"

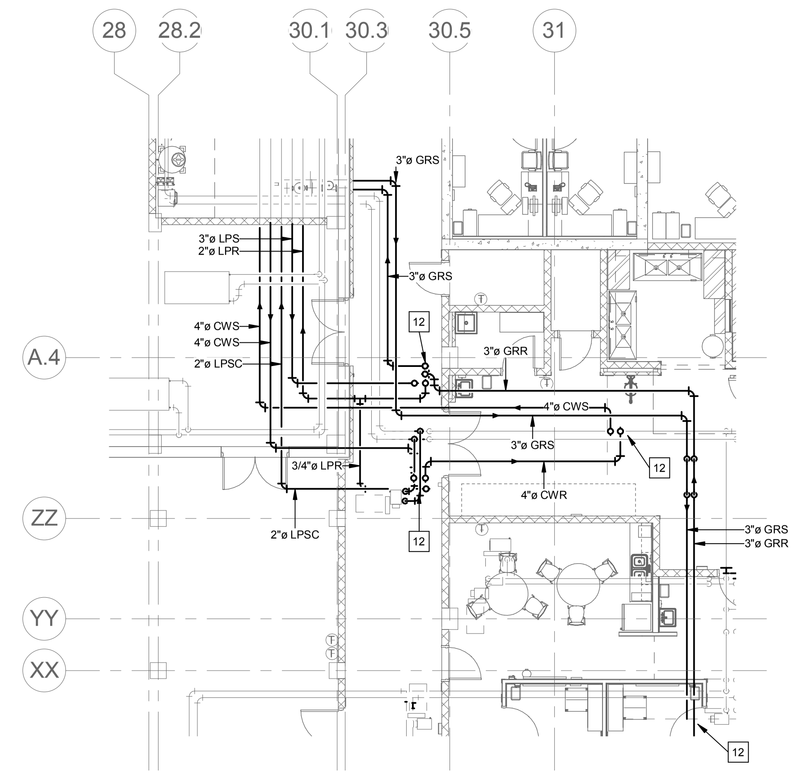

N

3 / MH-801 **PARTIAL PIPING FLOOR PLAN - (IF DEDUCT ALTERNATE #03 IS ACCEPTED)**

N.T.S.

GENERAL NOTES:

1. REFER TO SHEET M-000 FOR GENERAL NOTES.

KEYED NOTES:

1 ALL CART WASH EXHAUST DUCTWORK SHALL BE CONSTRUCTED OF WELDED STAINLESS STEEL.

2 36" X 24" EXHAUST DUCT UP THRU ROOF TO EXHAUST FAN EF-1. REFER TO PARTIAL PLAN ON THIS SHEET FOR CONTINUATION.

3 54" X 16" SUPPLY DUCT UP THRU ROOF TO AIR HANDLING UNIT AHU-1. REFER TO PARTIAL ROOF PLAN ON THIS SHEET FOR CONTINUATION.

4 54"x16" SA DOWN THRU ROOF. SPLIT INTO 34"x16" AND 20"x16" ONCE THRU ROOF PENETRATION. REFER TO PARTIAL DUCTWORK FLOOR PLAN ON THIS SHEET FOR CONTINUATION, AND DETAIL 9 ON SHEET MH-511.

5 12"Ø EXHAUST DUCT DOWN THRU ROOF. REFER TO PARTIAL DUCTWORK FLOOR PLAN ON THIS SHEET FOR CONTINUATION. TERMINATE WITH GOOSENECK A MINIMUM OF 18" ABOVE ROOF.

6 4" CWS AND CWR PIPING DOWN THRU ROOF. REFER TO PARTIAL PIPING FLOOR PLAN ON THIS SHEET FOR CONTINUATION. PROVIDE PIPE CURB ASSEMBLY FOR PIPE PENETRATIONS AT ROOF. REFER TO DETAIL 5 ON SHEET MP-512.

7 2" LPSC DOWN THRU ROOF INSIDE AHU PIPE VESTIBULE. REFER TO PARTIAL PIPING FLOOR PLAN ON THIS SHEET FOR CONTINUATION.

8 4" CWS AND CWR DOWN THRU ROOF INSIDE AHU PIPE VESTIBULE. REFER TO PARTIAL PIPING FLOOR PLAN ON THIS SHEET FOR CONTINUATION.

9 3" LPS AND 2" LPR DOWN THRU ROOF INSIDE PRE-HEAT COIL PIPE VESTIBULE. REFER TO PARTIAL PIPING FLOOR PLAN ON THIS SHEET FOR CONTINUATION.

10 3" GRS AND GRR DOWN THRU ROOF INSIDE OUTDOOR AIR RECOVERY COIL PIPE VESTIBULE. REFER TO PARTIAL PIPING FLOOR PLAN ON THIS SHEET FOR CONTINUATION.

11 12"Ø EXHAUST DUCT UP THRU ROOF. REFER TO PARTIAL ROOF PLAN ON THIS SHEET FOR CONTINUATION.

12 PIPING UP THRU ROOF. REFER TO PARTIAL ROOF PLAN ON THIS SHEET FOR CONTINUATION.

13 36"x24" EXHAUST DUCT DOWN THRU ROOF REFER TO PARTIAL DUCTWORK PLAN ON THIS SHEET FOR CONTINUATION AND DETAIL 9 ON SHEET MH-511.

14 3" GRS AND GRR DOWN THRU ROOF. REFER TO PARTIAL PIPING PLAN ON THIS SHEET FOR CONTINUATION. PROVIDE PIPE CURB ASSEMBLY FOR PIPE PENETRATION OF ROOF. REFER TO DETAIL 5 ON SHEET MP-512.

100% CONSTRUCTION DOCUMENTS
FULLY SPRINKLERED

Revisions:	Date

VA

SPS BASEMENT ADDITION

2121 LAKE AVE., FORT WAYNE, IN 46805

ARCHITECT/ENGINEERS:

AMERICAN STRUCTUREPOINT INC.
7260 SHADELAND STATION
INDIANAPOLIS, IN 46256-3957
TEL 317.547.5580 FAX 317.543.0270
www.structurepoint.com

Ross&Baruzzini
8250 Haverstick Road
Suite 285
Indianapolis, IN 46240
317.638.8383

CONSULTANTS:

JEFFREY R. GRAMBOSKI REGISTERED PE 10406194 STATE OF INDIANA PROFESSIONAL ENGINEER
08/15/14

Drawing Title: MECHANICAL DEDUCT ALTERNATE #03

Approved: Project Director

Project Title: SPS BASEMENT ADDITION

Location: 2121 LAKE AVE., FORT WAYNE, IN 46805

Date: 08/15/2014 | Checked: SWD | Drawn: RAC

Project Number: 2010.00629

Building Number: 01

Drawing Number: MH-801

Office of Construction and Facilities Management

VA Department of Veterans Affairs

C:\Users\jkritzi\Documents\1724-03_Mechanical Central_jkritzi.rvt

8/13/2014 12:06:57 PM

VA FORM 08-6231

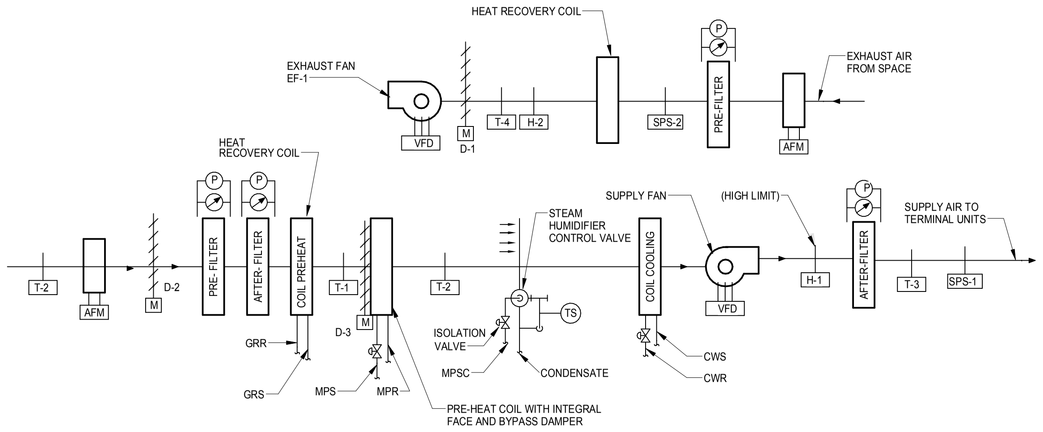

AHU-1 SEQUENCE OF OPERATION (CONSTANT VOLUME) WITH EXHAUST FAN EF-1 AND ENERGY RECOVERY COILS:

OCCUPIED CYCLE: ENERGY MANAGEMENT SYSTEM WILL INDICATE THAT THE AREA SERVED IS OCCUPIED VIA A TIME SCHEDULE OR OPERATOR'S COMMAND. OPEN OUTDOOR AIR DAMPER. OPEN THE EXHAUST DAMPER. START AND RUN SUPPLY FAN AND EXHAUST FAN. SUPPLY AND EXHAUST FANS SHALL OPERATE CONTINUOUSLY.

THE SPEED OF THE SUPPLY FAN SHALL BE VARIED TO SATISFY THE ASSOCIATED TERMINAL BOXES, SUCH THAT ONE TERMINAL BOX SHOULD BE ON THE VERGE OF FULL-OPEN (95% OR MORE). THE ENERGY MANAGEMENT SYSTEM SHALL SIGNAL THE RESPECTIVE VARIABLE FREQUENCY DRIVE TO CONTROL FAN SPEED. IF NO TERMINAL BOXES ARE FULLY OPEN, SLOW DOWN THE SUPPLY FAN. IF MORE THAN ONE TERMINAL BOX IS FULLY OPEN, SPEED UP THE SUPPLY FAN. IN ADDITION, MONITOR SUPPLY DUCT STATIC PRESSURE FOR OPERATOR'S ADVISEMENT.

CONTINUOUSLY MEASURE SUPPLY AIRFLOW AND EXHAUST AIRFLOW VIA THE AIRFLOW MEASURING DEVICES. THE SPEED OF THE EXHAUST FAN SHALL BE MODULATED TO MAINTAIN PROGRAMMABLE OFFSET OF EXHAUST AIRFLOW WITH RESPECT TO THE SUPPLY AIRFLOW. THE ENERGY MANAGEMENT SYSTEM SHALL SIGNAL THE RESPECTIVE VARIABLE FREQUENCY DRIVE TO CONTROL EXHAUST FAN SPEED.

HUMIDIFIER: REFER TO SEQUENCE 3 ON DRAWING MI-711 FOR CONTROL SEQUENCE OF STEAM HUMIDIFIER.

ECONOMIZER: THIS UNIT IS 100% OUTDOOR AIR CONSTANTLY. IN LIEU OF ECONOMIZER, USE ENERGY-RECOVERY RUNAROUND COIL. MODULATE ENERGY-RECOVERY COIL CONTROL VALVE (DEPICTED IN DETAIL 9/MI212) AS REQUIRED TO MAINTAIN LEAVING AIR TEMPERATURE T-1 AT SETPOINT (INITIALLY 55 DEGF, ADJUSTABLE) AS FIRST PRIORITY PRIOR TO ATTEMPTING EITHER STEAM PREHEAT OR CHILLED WATER COOLING. IN WINTER, MODULATE ENERGY-RECOVERY COIL CONTROL VALVE TO PRODUCE T-1 AS WARM AS POSSIBLE BUT NOT ABOVE 55 DEGF. IN SUMMER, MODULATE ENERGY-RECOVERY COIL CONTROL VALVE TO PRODUCE T-1 AS COOL AS POSSIBLE BUT NOT BELOW 55 DEGF.

IF SUPPLY AIR TEMPERATURE T-3 EXCEEDS SETPOINT, MODULATE COOLING COIL CONTROL VALVE AS REQUIRED TO MAINTAIN SUPPLY AIR TEMPERATURE SETPOINT T-3 (INITIALLY 55 DEGF, ADJUSTABLE).

IF SUPPLY AIR TEMPERATURE T-3 FALLS BELOW SETPOINT, OPEN HEATING COIL CONTROL VALVE AND MODULATE FACE-AND-BYPASS DAMPER TO MAINTAIN THE SUPPLY AIR TEMPERATURE SETPOINT T-3. WHEN PARTIAL HEATING IS REQUIRED, USE FACE-AND-BYPASS FOR CONTROL. WHEN NO HEATING IS REQUIRED, CLOSE HEATING COIL CONTROL VALVE.

SHUTDOWN ALARMS: CONFIRM NORMAL FAN OPERATION VIA CURRENT SENSOR. UPON FAILURE OF SUPPLY FAN OR EXHAUST FAN, DISABLE FANS. RELEASE ALL CONTROL VALVES AND DAMPERS TO THEIR FAIL-SAFE POSITION DEFINED BELOW. ANNUNCIATE ALARM AT BUILDING TEMPERATURE CONTROL SYSTEM HOST COMPUTER. UPON FREEZESTAT ALARM AND/OR DUCT HIGH-LIMIT STATIC PRESSURE ALARM, DISABLE FANS. RELEASE ALL CONTROL VALVES AND DAMPERS TO THEIR FAIL-SAFE POSITION DEFINED BELOW. ANNUNCIATE ALARM AT BUILDING TEMPERATURE CONTROL SYSTEM HOST COMPUTER. TRACK AND LOG EACH FAN'S RUN TIME IN HOURS AND FAILURE ALARM HISTORY. PROVIDE ANTI-CYCLING SOFTWARE TO PREVENT ANY FAN MOTOR FROM STARTING MORE THAN SIX (6) TIMES PER HOUR.

NON-SHUTDOWN ALARMS: UPON SUPPLY AIR TEMPERATURE OUT-OF-LIMIT, ANNUNCIATE ALARM AT SYSTEM HOST COMPUTER. UPON AIR FILTER DIFFERENTIAL PRESSURE IN EXCESS OF SETPOINT, ANNUNCIATE NON-CRITICAL MAINTENANCE ADVISORY ALARM AT SYSTEM HOST COMPUTER.

FAIL-SAFE POSITION: ALL CONTROL VALVES AND DAMPERS MENTIONED ABOVE SHALL BE NORMALLY-CLOSED AND FAIL-CLOSED, EXCEPT THAT PREHEAT CONTROL VALVE SHALL BE NORMALLY-OPEN AND FAIL-OPEN. (FOR THREE-WAY VALVES, THE TERM "OPEN" OR "CLOSED" MEANS OPEN-TO-THE-COIL OR CLOSED-TO-THE-COIL, RESPECTIVELY.)

UNOCCUPIED CYCLE: ENERGY MANAGEMENT SYSTEM WILL INDICATE THAT THE AREA SERVED IS UNOCCUPIED VIA A TIME SCHEDULE OR OPERATOR'S COMMAND. OPERATION OF ALL SEQUENCES ABOVE SHALL REMAIN EXACTLY AS DESCRIBED FOR THE OCCUPIED CYCLE, EXCEPT THAT TERMINAL BOX CFM SETTINGS WILL BE REVISED IN ACCORDANCE WITH RESET SCHEDULE.

1 CONSTANT VOLUME CONTROLS

NTS

THE SYSTEM CONSISTS OF AN EXHAUST FAN, EXHAUST DAMPER, OUTSIDE AIR DAMPER AND ROOM MOUNTED TEMPERATURE SENSOR. ON A RISE IN SPACE TEMPERATURE ABOVE THE SPACE TEMPERATURE SET POINT OF 80°F (ADJ) THE EXHAUST AIR AND OUTSIDE AIR DAMPERS SHALL OPEN AND ONCE PROVEN OPEN BY END SWITCHES ON THE DAMPER ACTUATOR, THE EXHAUST FAN SHALL START. ON A FALL IN SPACE TEMPERATURE SET POINT, THE EXHAUST FAN SHALL BE DISABLED AND THE MOTORIZED DAMPERS FULLY CLOSED. CONFIRM NORMAL FAN OPERATION VIA A CURRENT SENSOR, AND ALARM UPON FAN FAILURE.

2 MECHANICAL ROOM VENTILATION SEQUENCE

NTS

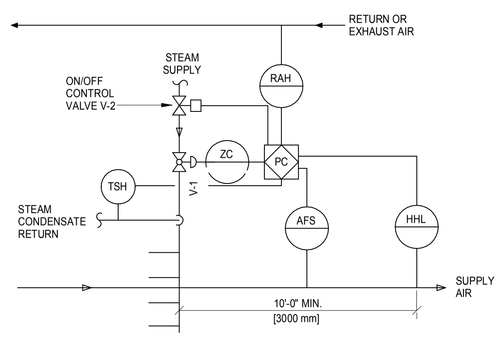

STEAM HUMIDIFIER

RETURN (OR EXHAUST) AIR HUMIDITY SHALL BE MONITORED. ON A CALL FOR HUMIDIFICATION, HUMIDIFIER VALVE V-1 SHALL MODULATE TO MAINTAIN THE RETURN (OR EXHAUST) AIR HUMIDITY SET POINT TO 30% (ADJUSTABLE). PRIOR TO ACTIVATION OF V-1, THE ON/OFF CONTROL VALVE V-2 SHALL BE ENABLED THROUGH ECC AND JACKET TEMPERATURE SENSED BY TSH SHALL BE WARM ENOUGH TO PREVENT CONDENSATION. THE HIGH LIMIT HUMIDITY SENSOR, LOCATED IN THE SUPPLY AIR DUCT 10 FEET AWAY FROM THE HUMIDIFIER SHALL DISABLE THE HUMIDIFIER AND GIVE AN ALARM SIGNAL TO THE ECC, IF THE SUPPLY AIR HUMIDITY EXCEEDS 90% RH (ADJUSTABLE). THE AIRFLOW SWITCH SHALL PROVE AIRFLOW BEFORE HUMIDITY CONTROLS ARE ACTIVATED.

3 STEAM HUMIDIFIER CONTROLS

NTS

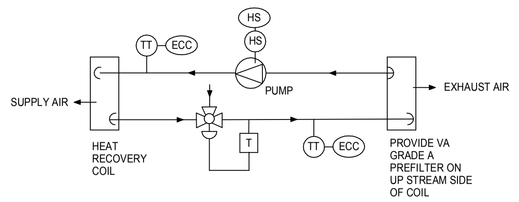

NOTES:

1. TO PREVENT ICING ON EXHAUST COIL MAINTAIN TEMPERATURE OF SOLUTION ENTERING EXHAUST AIR COIL ≥ 35° F BY MODULATING 3 WAY VALVE.
2. DISCONTINUE HEAT RECOVERY IF OUTSIDE AIR TEMPERATURE ≥ BETWEEN 50 TO 60° F (ADJUSTABLE)
3. PROVIDE 40% PROPYLENE GLYCOL SOLUTION.

4 RUN AROUND HEAT RECOVERY COIL DETAIL

NTS

100% CONSTRUCTION DOCUMENTS
FULLY SPRINKLERED

Revisions:	Date

VA

SPS BASEMENT ADDITION

2121 LAKE AVE., FORT WAYNE, IN 46805

ARCHITECT/ENGINEERS:

AMERICAN STRUCTUREPOINT INC.
7260 SHADELAND STATION
INDIANAPOLIS, IN 46256-3957
TEL 317.547.5580 FAX 317.543.0270
www.structurepoint.com

Ross&Baruzzini
8250 Haverstick Road
Suite 285
Indianapolis, IN 46240
317.638.8383

CONSULTANTS:

JEFFREY R. CRAWFORD REGISTERED PE 10404134 STATE OF INDIANA PROFESSIONAL ENGINEER
08/15/14

Drawing Title: MECHANICAL CONTROLS	Project Title: SPS BASEMENT ADDITION		Project Number: 2010.00629
			Building Number: 01
Approved: Project Director	Location: 2121 LAKE AVE., FORT WAYNE, IN 46805		Drawing Number: MI-711
	Date: 08/15/2014	Checked: SWD	Drawn: RAC

Office of Construction and Facilities Management

VA Department of Veterans Affairs

VA FORM 08-6231

C:\Users\jkrbs\Documents\1724-03_Mechanical Central_jkrbs.rvt

8/13/2014 12:06:58 PM

SEQUENCE OF OPERATION:

1. STEAM CONTROL VALVE SHALL MODULATE TO MAINTAIN THE LEAVING HOT WATER TEMPERATURE AT SET POINT.

2. THE LEAVING HOT WATER TEMPERATURE SHALL BE RESET INVERSELY WITH THE OUTDOOR TEMPERATURE AS SCHEDULED.

3. THE LEAD AND LAG PUMPS AND HEAT EXCHANGERS SHALL BE SEQUENTIAL BY THE OPERATOR CONTROLS AT THE PRE-DETERMINED INTERVAL (USUALLY 7 DAYS). IN THE EVENT THE PUMP FAILS TO START WITHIN 30 SECONDS, AN ALARM SHALL BE INITIATED AND THE SECOND PUMP SHALL START AUTOMATICALLY.

VALVE SEQUENCE:

1. V1 (1/3 CAPACITY) MODULATING FULLY OPEN TO MAINTAIN SET POINT
2. V2 (2/3 CAPACITY) MODULATE FULLY OPEN TO MAINTAIN SET POINT.
3. BOTH V1 & V2 MODULATE TOGETHER TO MAINTAIN SET POINT.

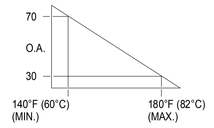

TYP OSA RESET SCHEDULE

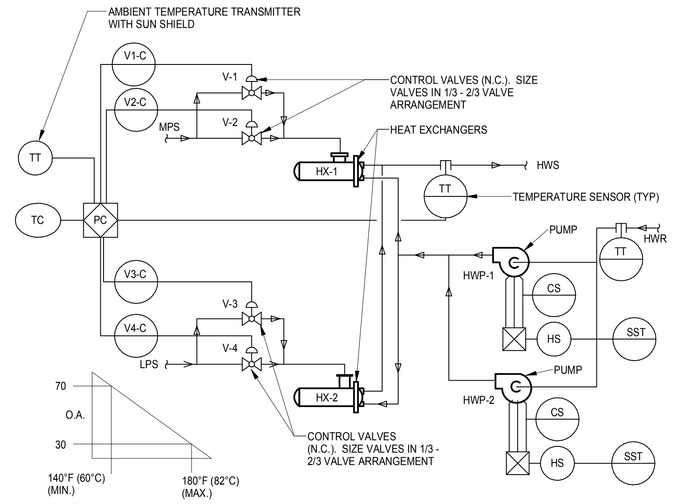

1 DUAL HEAT EXCHANGER CONTROLS (HEATING SYSTEM)

NTS

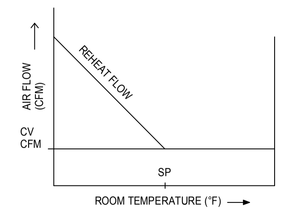

CV BOX CONTROL SEQUENCE
NO DEADBAND

A. UPON FALL IN SPACE TEMPERATURE BELOW SET POINT VALVE V-1 WILL MODULATE TO MAINTAIN SET POINT ± .5°. THE ADJUSTABLE TOLERANCE OF ± .5° HAS BEEN SELECTED TO PREVENT VALVE HUNTING
B. THE REVERSE SHALL OCCUR ON RISE IN SPACE TEMPERATURE.

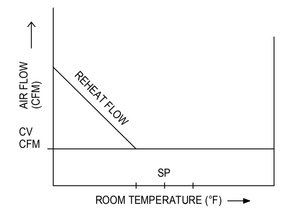

CV BOX CONTROL SEQUENCE
W/DEADBAND

A. SET POINTS SHALL SET AS FOLLOWS:
COOLING 75° F (ADJ)
HEATING 70° F (ADJ)
DEADBAND OF 5° F BETWEEN HEATING AND COOLING SET POINT WILL BE MAINTAINED
B. UPON FALL IN SPACE TEMPERATURE BELOW SET POINT VALVE V-1 WILL MODULATE TO MAINTAIN SET POINT ± .5°.THE ADJUSTABLE TOLERANCE OF ± .5° HAS BEEN SELECTED TO PREVENT VALVE HUNTING
C. THE REVERSE SHALL OCCUR ON RISE IN SPACE TEMPERATURE.

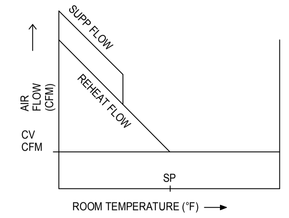

CV BOX CONTROL SEQUENCE
NO DEADBAND

A. UPON FALL IN SPACE TEMPERATURE BELOW SET POINT VALVE V-1 WILL MODULATE TO MAINTAIN SET POINT ±5°. THE ADJUSTABLE TOLERANCE OF ± .5° HAS BEEN SELECTED TO PREVENT VALVE HUNTING
B. VALVE V-2 SHALL BE ENABLED WHEN OUTSIDE AIR FALLS BELOW 40° F (ADJ) AND VALVE V-1 HAS BEEN MODULATED OPEN ABOVE 30% (ADJ) V-2 SHALL THEN BE MODULATED TO MAINTAIN SET POINT ± .5° F. THE ADJUSTABLE TOLERANCE OF .5° F HAS BEEN SELECTED TO PREVENT VALVE HUNTING.
C. THE REVERSE SHALL OCCUR ON RISE IN SPACE TEMPERATURE.

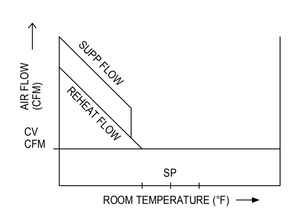

CV BOX CONTROL SEQUENCE
W/DEADBAND

A. SET POINTS SHALL SET AS FOLLOWS:
COOLING 75° F (ADJ)
HEATING 70° F (ADJ)
DEADBAND OF 5° F BETWEEN HEATING AND COOLING SET POINT WILL BE MAINTAINED
B. UPON FALL IN SPACE TEMPERATURE BELOW SET POINT VALVE V-1 WILL MODULATE TO MAINTAIN SET POINT ± .5°, THE ADJUSTABLE TOLERANCE OF ± .5°. HAS BEEN SELECTED TO PREVENT VALVE HUNTING
C. VALVE V-2 SHALL BE ENABLED WHEN OUTSIDE AIR FALLS BELOW 40° F (ADJ) AND VALVE V-1 HAS BEEN MODULATED OPEN ABOVE 30% (ADJ) V-2 SHALL THEN BE MODULATED TO MAINTAIN SET POINT ± .5° F. THE ADJUSTABLE TOLERANCE OF .5° F HAS BEEN SELECTED TO PREVENT VALVE HUNTING.
D. THE REVERSE SHALL OCCUR ON RISE IN SPACE TEMPERATURE.

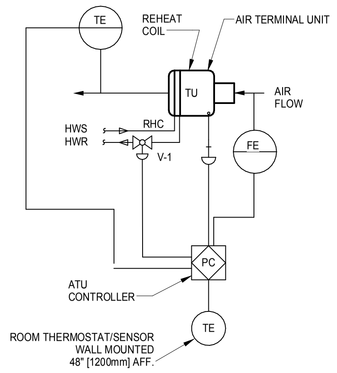

NO SUPPLEMENTAL HEATING

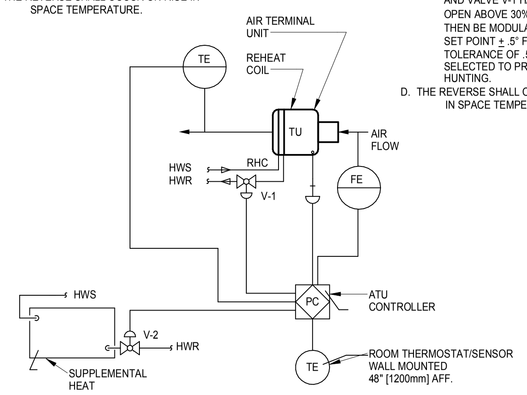

WITH SUPPLEMENTAL HEATING

2 CONSTANT VOLUME AIR TERMINAL UNIT CONTROL DIAGRAM

NTS

100% CONSTRUCTION DOCUMENTS
FULLY SPRINKLERED

Revisions:	Date

VA

SPS BASEMENT ADDITION

2121 LAKE AVE., FORT WAYNE, IN 46805

ARCHITECT/ENGINEERS:

AMERICAN STRUCTUREPOINT INC.
7260 SHADELAND STATION
INDIANAPOLIS, IN 46256-3957
TEL 317.547.5580 FAX 317.543.0270
www.structurepoint.com

Ross&Baruzzini
8250 Haverstick Road
Suite 285
Indianapolis, IN 46240
317.638.8383

CONSULTANTS:

JEFFREY R. CRAWFORD REGISTERED PE 10404134 STATE OF INDIANA PROFESSIONAL ENGINEER
08/15/14

Drawing Title	MECHANICAL CONTROLS
Approved: Project Director	
Project Title	SPS BASEMENT ADDITION
Location	2121 LAKE AVE., FORT WAYNE, IN 46805
Date	08/15/2014
Checked	SWD
Drawn	RAC
Project Number	2010.00629
Building Number	01
Drawing Number	MI-712

Office of Construction and Facilities Management

VA Department of Veterans Affairs

VA FORM 08-6231

C:\Users\jkrbs\Documents\1724-03_Mechanical Central_jkrbs.rvt

8/13/2014 12:06:58 PM

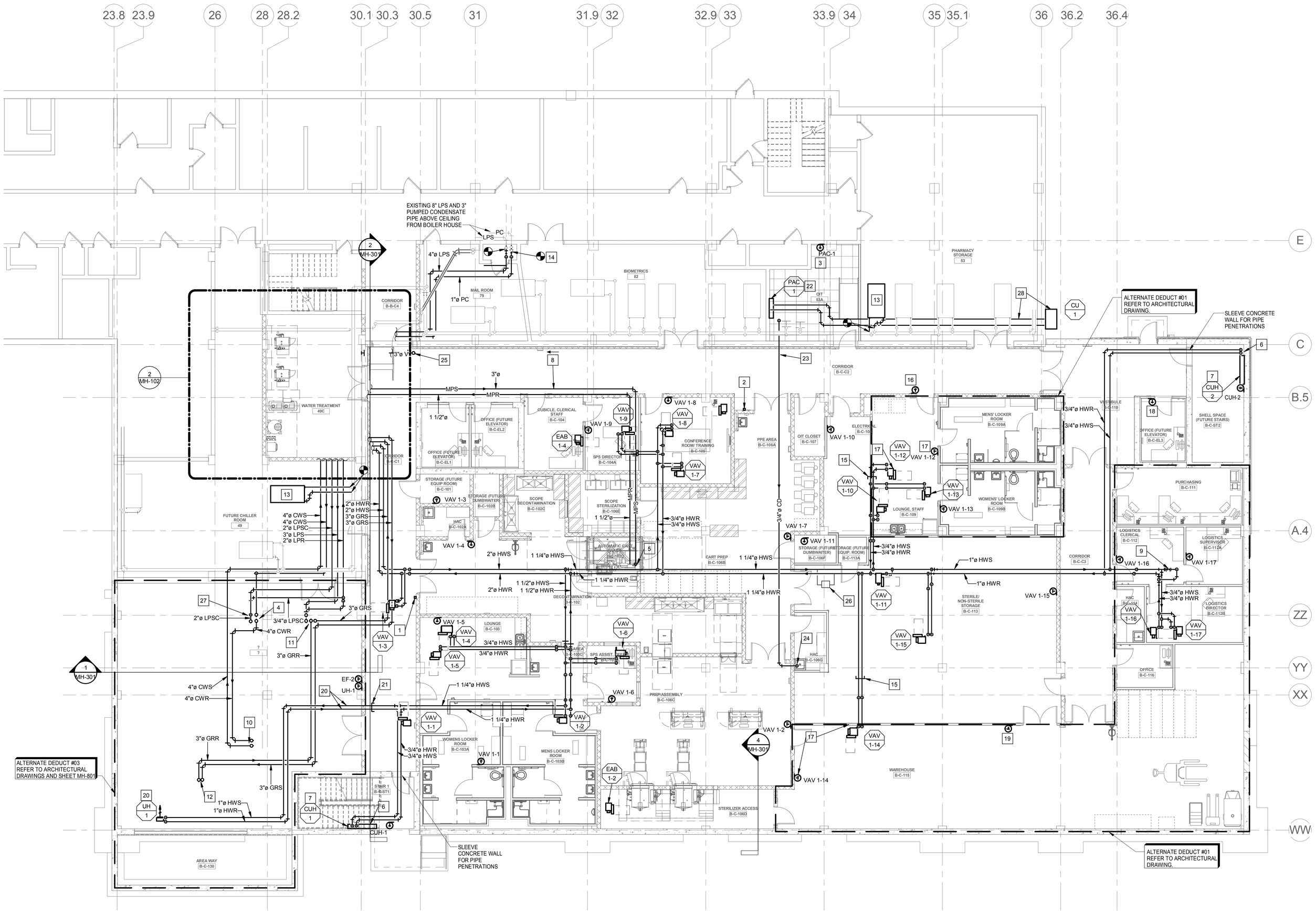

N

1 MP-101 **BASEMENT LEVEL PIPING PLAN - NEW WORK**
1/8" = 1'-0"

GENERAL NOTES:

1. REFER TO SHEET M-000 FOR GENERAL NOTES.
2. ALL PIPE RUNOUT SIZES TO AIR TERMINAL UNIT REHEAT COIL SHALL BE 3/4" UNLESS NOTED OTHERWISE.

KEYED NOTES:

1 WALL MOUNTED DECONTAM ROOM NEGATIVE PRESSURE MONITOR FOR MONITORING SPACE PRESSURE BETWEEN DECONTAM ROOM AND CORRIDOR. INSTALL MONITOR AND PRESSURE SENSORS PER MANUFACTURERS RECOMMENDATIONS.

2 WALL MOUNTD PREP-ASSEMBLY POSITIVE PRESSURE MONITOR FOR MONITORING SPACE PRESSURE BETWEEN PREP-ASSEMBLY AND CORRIDOR. INSTALL MONITOR AND PRESSURE SENSORS PER MANUFACTURERS RECOMMENDATIONS.

3 COORDINATE LOCATION OF WALL MOUNTED THERMOSTAT/SPACE TEMPERATURE SENSOR IN ROOM WITH LOCATION OF EQUIPMENT AND OTHER WALL MOUNTED DEVICES PRIOR TO INSTALLING.

4 4" CWS AND CWR UP THRU ROOF TO AIR HANDLING UNIT AHU-1. PIPING SHALL BE LOCATED INSIDE COOLING COIL PIPE VESTIBULE.

5 CONNECT 3" MPS AND 1 1/2" MPR TO CART WASHER DISINFECTOR. PROVIDE SHUT-OFF VALVES AT EQUIPMENT. INSTALL PER MANUFACTURERS RECOMMENDATIONS.

6 3/4" HWS AND HWR EXPOSED DOWN CONCRETE WALL TO CABINET UNIT HEATER.

7 INSTALL BOTTOM OF CABINET UNIT HEATER 8" AFF.

8 SLOPE STEAM MAIN DOWN IN DIRECTION TO STEAM GENERATORS.

9 CALIBRATED ORIFICE BALANCING VALVE. BALANCE FOR 5 GPM.

10 4" CWS AND CWR UP THRU ROOF TO AIR COOLED CHILLER CH-1. REFER TO SHEET MH-102 FOR CONTINUATION.

11 3" GRS AND GRR UP THRU ROOF TO HEAT RECOVERY COIL IN AHU-1. PIPING SHALL BE LOCATED IN HEAT RECOVERY COIL PIPE VESTIBULE. REFER TO SHEET MH-102 FOR CONTINUATION.

12 3" GRS AND GRR UP THRU ROOF TO HEAT RECOVERY COIL IN EF-1 INTAKE DUCT. REFER TO SHEET MH-102 FOR CONTINUATION.

13 RELOCATED EXISTING HOT WATER RADIATOR UNIT. RECONNECT EXISTING BRANCH PIPING TO UNIT.

14 CONNECT NEW 3" LPS AND 1" PC TO EXISTING 8" LPS AND 3" PC MAINS. COORDINATE SHUT DOWN WITH OWNERS REPRESENTATIVE.

15 CAP BRANCH PIPING WHERE SHOWN IF DEDUCT ALTERNATE #01 IS ACCEPTED.

16 LOCATE THERMOSTAT FOR VAV 1-13 IN CORRIDOR IF DEDUCT ALTERNATE #01 IS ACCEPTED.

17 DELETE AIR TERMINAL UNIT AND ASSOCIATED THERMOSTAT IF DEDUCT ALTERNATE #01 IS ACCEPTED.

18 LOCATE THERMOSTAT FOR VAV 1-16 IN OFFICE IF DEDUCT ALTERNATE #01 IS ACCEPTED.

19 LOCATE THERMOSTAT FOR VAV 1-17 IN SHELL SPACE IF DEDUCT ALTERNATE #01 IS ACCEPTED.

20 DELETE UH-1 AND ASSOCIATED BRANCH PIPING IF ALTERNATE DEDUCT #03 IS ACCEPTED.

21 CAP BRANCH PIPING AT THIS LOCATION IF DEDUCT ALTERNATE #03 IS ACCEPTED.

22 INSTALL UNIT ON WALL. TOP OF UNIT 8'-0" A.F.F. COORDINATE LOCATION WITH OWNER PRIOR TO INSTALLING.

23 REFRIGERANT PIPING UP TO SECOND FLOOR. REFER TO SHEET MH102 FOR CONTINUATION. SIZE REFRIGERANT PIPING PER MANUFACTURER'S RECOMMENDATIONS.

24 3/4" CONDENSATE LINE EXPOSED DOWN WALL. TERMINATE 6" ABOVE JANITORS SINK.

25 3" STEAM VENT UP THRU ROOF. REFER TO SHEET MH-102 FOR CONTINUATION.

26 HEATING HOT WATER SYSTEM DIFFERENTIAL PRESSURE SENSOR FOR PUMPS HWP-1 AND HWP-2. REFER TO DETAIL 8 ON SHEET MP-511.

27 2" LPSC UP THRU ROOF TO AHU-1 HUMIDIFIER. PIPING SHALL BE LOCATED INSIDE HUMIDIFIER PIPE VESTIBULE. PROVIDE DRIP TRAP AT BASE OF LPSC RISER. REFER TO STEAM PIPING DIAGRAM ON SHEET MP-312.

28 REFRIGERANT PIPING THRU EXISTING EXTERIOR WALL TO CONDENSING UNIT. CONDENSING UNIT SHALL BE WALL MOUNTED AND BRACED TO THE WALL. SLEEVE EXTERIOR WALL FOR PIPE PENETRATIONS AND SEAL WATER TIGHT. SIZE REFRIGERANT PIPING PER MANUFACTURER'S RECOMMENDATIONS.

100% CONSTRUCTION DOCUMENTS
FULLY SPRINKLERED

Revisions:	Date

VA

SPS BASEMENT ADDITION

2121 LAKE AVE., FORT WAYNE, IN 46805

ARCHITECT/ENGINEERS:

AMERICAN STRUCTUREPOINT INC.
7260 SHADELAND STATION
INDIANAPOLIS, IN 46256-3957
TEL 317.547.5580 FAX 317.543.0270
www.structurepoint.com

Ross&Baruzzini
8250 Haverstick Road
Suite 285
Indianapolis, IN 46240
317.638.8383

CONSULTANTS:

JEFFREY R. GRAWCHOW REGISTERED PE 10404134 STATE OF INDIANA PROFESSIONAL ENGINEER
08/15/14

Drawing Title: BASEMENT LEVEL PIPING PLAN - NEW WORK

Approved: Project Director

Project Title: SPS BASEMENT ADDITION

Location: 2121 LAKE AVE., FORT WAYNE, IN 46805

Date: 08/15/2014 | Checked: SWD | Drawn: RAC

Project Number: 2010.00629

Building Number: 01

Drawing Number: MP-101

Office of Construction and Facilities Management

VA Department of Veterans Affairs

C:\Users\jkribs\Documents\1724-03_Mechanical Central_jkribs.rvt

8/13/2014 12:07:01 PM

VA FORM 08-6231

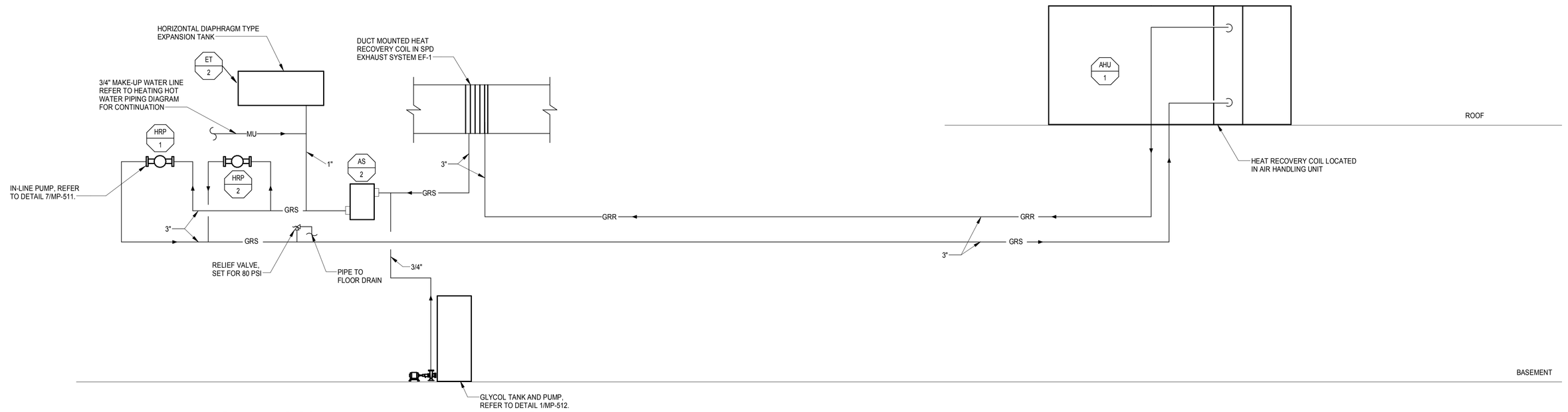

1 RUN AROUND COIL HEAT RECOVERY FLOW DIAGRAM

NTS

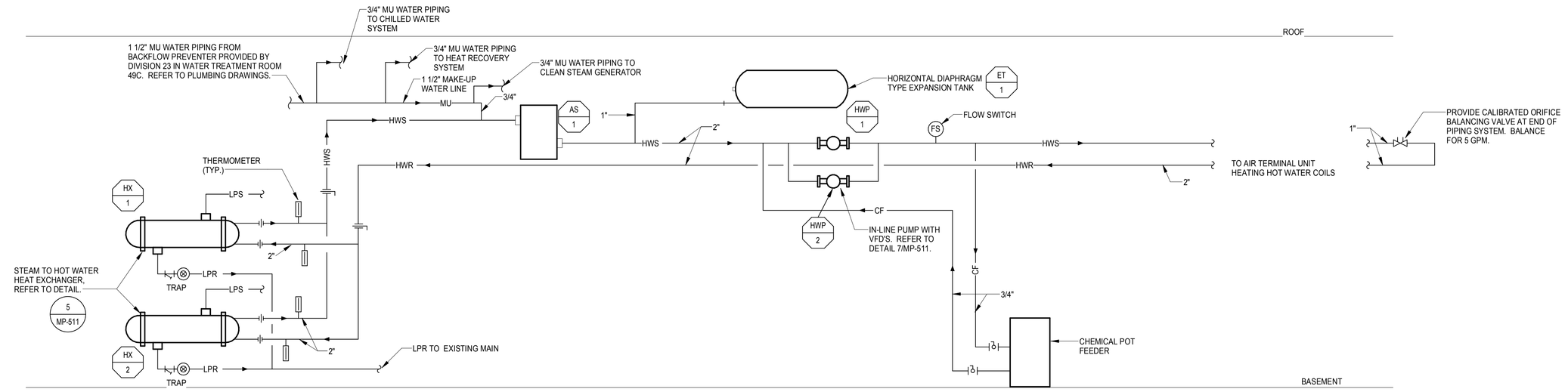

2 HEATING HOT WATER FLOW DIAGRAM

NTS

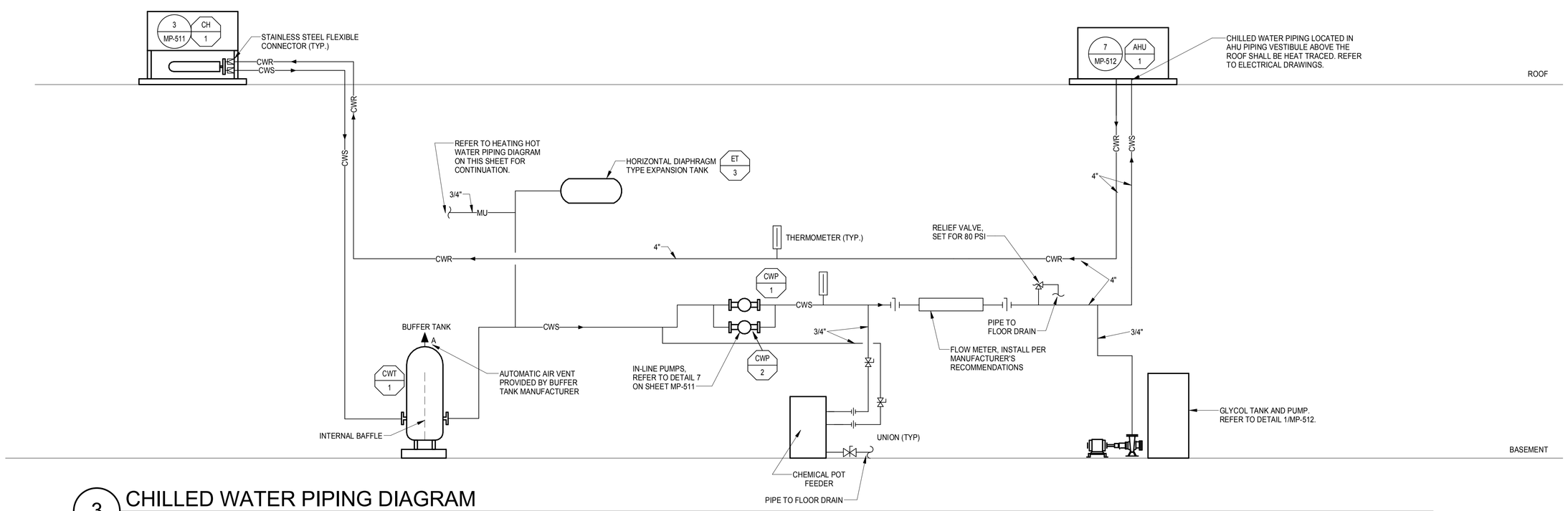

3 CHILLED WATER PIPING DIAGRAM

NTS

100% CONSTRUCTION DOCUMENTS
FULLY SPRINKLERED

Revisions:	Date

VA

SPS BASEMENT ADDITION

2121 LAKE AVE., FORT WAYNE, IN 46805

ARCHITECT/ENGINEERS:

AMERICAN STRUCTUREPOINT INC.
7260 SHADELAND STATION
INDIANAPOLIS, IN 46256-3957
TEL 317.547.5580 FAX 317.543.0270
www.structurepoint.com

Ross&Baruzzini
8250 Haverstick Road
Suite 285
Indianapolis, IN 46240
317.638.8383

CONSULTANTS:

JEFFREY R. CRAWFORD REGISTERED PE 10404134 STATE OF INDIANA PROFESSIONAL ENGINEER
08/15/14

Drawing Title: FLOW DIAGRAMS	Project Title: SPS BASEMENT ADDITION		Project Number: 2010.00629
			Building Number: 01
Approved: Project Director	Location: 2121 LAKE AVE., FORT WAYNE, IN 46805		Drawing Number: MP-311
	Date: 08/15/2014	Checked: SWD	Drawn: RAC

Office of Construction and Facilities Management

VA Department of Veterans Affairs

C:\Users\jkribs\Documents\1724-03_Mechanical Central_jkribs.rvt

8/13/2014 12:07:02 PM

VA FORM 08-6231

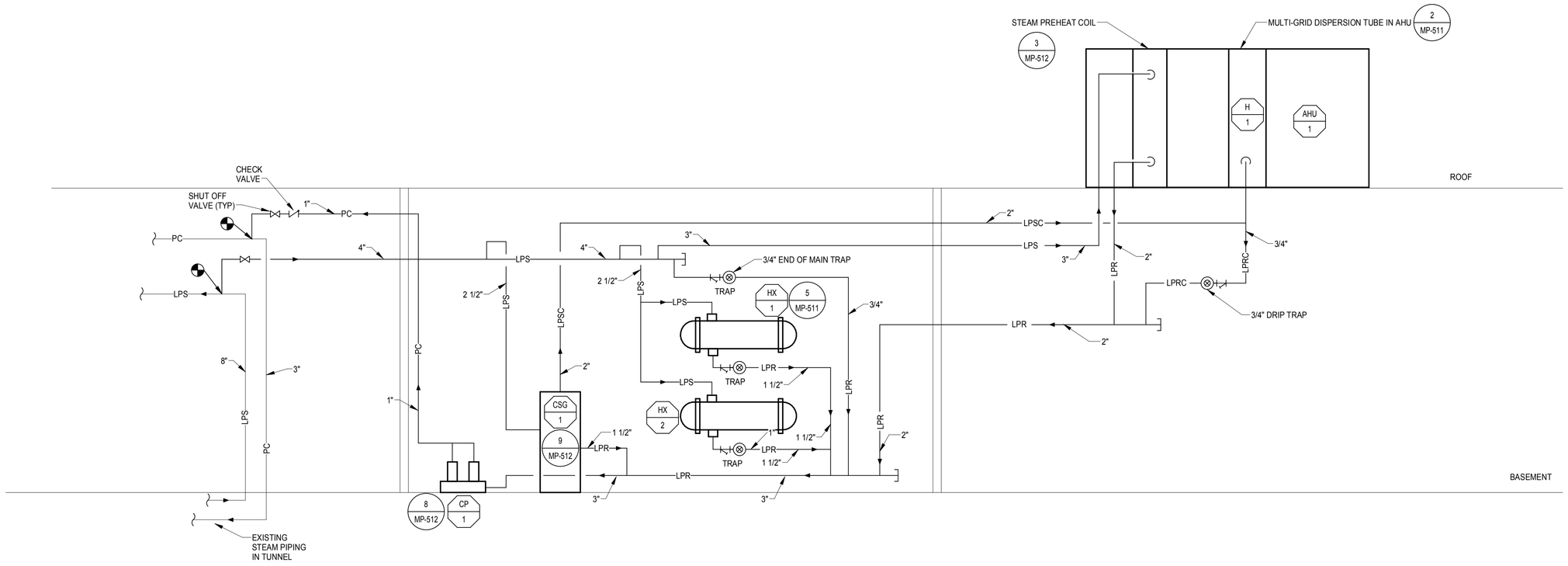

1 STEAM PIPING DIAGRAM
NTS

100% CONSTRUCTION DOCUMENTS
FULLY SPRINKLERED

Revisions:	Date

VA

SPS BASEMENT ADDITION

2121 LAKE AVE., FORT WAYNE, IN 46805

ARCHITECT/ENGINEERS:

AMERICAN STRUCTUREPOINT INC.
7260 SHADELAND STATION
INDIANAPOLIS, IN 46256-3957
TEL 317.547.5580 FAX 317.543.0270
www.structurepoint.com

Ross&Baruzzini
8250 Haverstick Road
Suite 285
Indianapolis, IN 46240
317.638.8383

CONSULTANTS:

JEFFREY R. CRAWFORD
REGISTERED
PE 10404134
STATE OF INDIANA
PROFESSIONAL ENGINEER
08/15/14

Drawing Title: FLOW DIAGRAMS

Approved: Project Director

Project Title: SPS BASEMENT ADDITION

Location: 2121 LAKE AVE., FORT WAYNE, IN 46805

Date: 08/15/2014 | Checked: SWD | Drawn: RAC

Project Number: 2010.00629

Building Number: 01

Drawing Number: MP-312

Office of Construction and Facilities Management

VA Department of Veterans Affairs

C:\Users\jkrbs\Documents\1724-03_Mechanical Central_jkrbs.rvt

8/13/2014 12:07:02 PM

VA FORM 08-6231

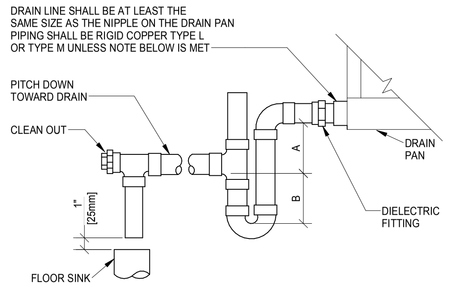

NOTE:
1. CPVC PIPE MAY BE USED ONLY IF APPROVED BY LOCAL BA AND IS INDOORS AND DOES NOT PASS THROUGH RATED BARRIERS.
2. DIELECTRIC FITTING TO BE USED WHEN TWO DISSIMILAR METALS ARE TO BE CONNECTED.

UNIT TYPE	A	B
DRAW THRU	2" [50mm] PLUS X	X
BLOW THRU	1" [25mm] MINIMUM	2X

WHERE X = STATIC PRESSURE IN PAN

1 AIR HANDLING UNIT DRAIN TRAP DETAIL
NTS

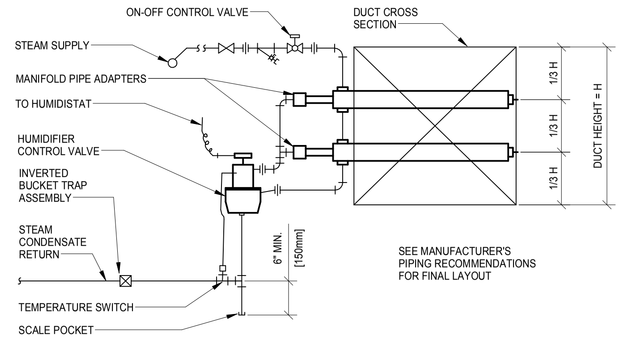

2 STEAM HUMIDIFIER - PIPING CONNECTION (MULTIPLE DISPERSION TUBES)
NTS

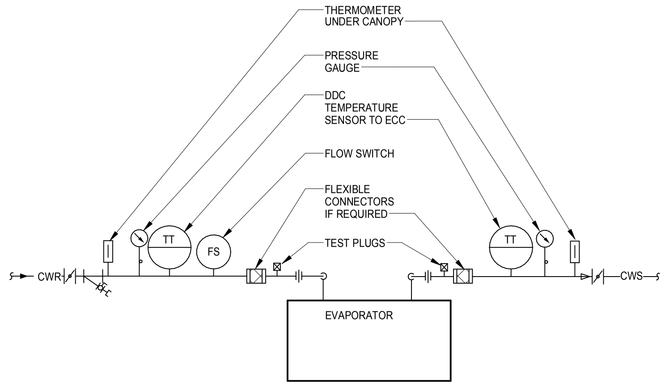

3 AIR COOLED CHILLER - PIPING CONNECTIONS
NTS

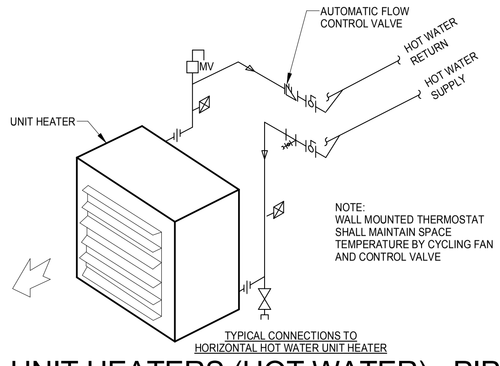

4 UNIT HEATERS (HOT WATER) - PIPING CONNECTIONS
NTS

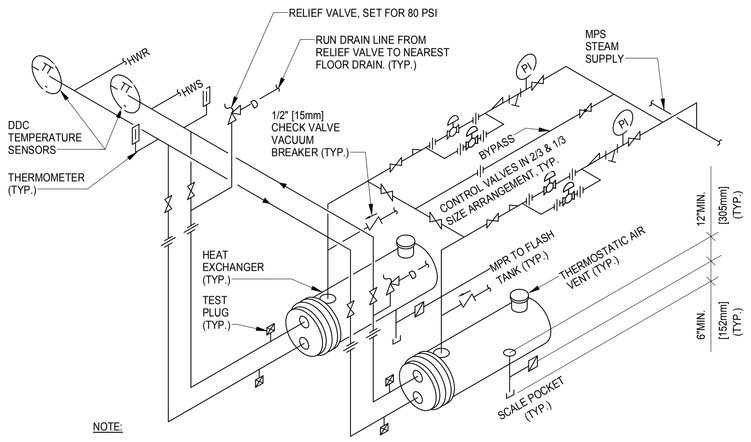

NOTE:
1. THE ABOVE DETAIL SHOWS REQUIRED PIPING FOR TWO HEAT EXCHANGERS IN PARALLEL.
2. PROVIDE SADDLE SUPPORTS AND LEGS OR HANGERS FOR HEAT EXCHANGER. MOUNTING HEIGHT SHALL BE ADJUSTED TO FACILITATE GRAVITY RETURN OF STEAM CONDENSATE.
3. MAKE THE BYPASS THE SAME SIZE AS THE CONNECTIONS TO THE CONTROL VALVES.
4. CONTROL VALVES SHALL BE IN A 1/3 AND 2/3 SIZE ARRANGEMENT.

5 HEAT EXCHANGER - STEAM TO HOT WATER
NTS

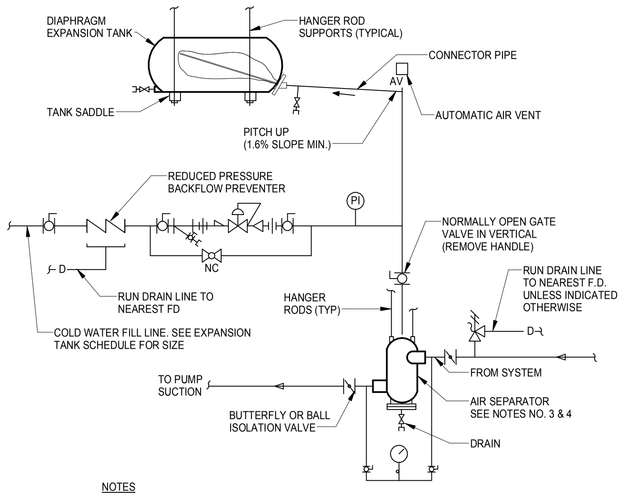

NOTES
1. SEE EXPANSION TANK SYSTEM SCHEDULE FOR COMPONENT SIZES.
2. RELIEF VALVE FOR CHILLED WATER SYSTEM IS SHOWN. OMIT WHEN RELIEF VALVE IS SHOWN ON HEAT EXCHANGER DETAIL & SYSTEM IS USED ONLY FOR HOT WATER HEATING.
3. PROVIDE STRAINER IN AIR SEPARATOR WHEN INDICATED IN EXPANSION TANK SCHEDULE.
4. FOR HOT WATER SYSTEMS 2" [50mm] AND SMALLER AND CHILLED WATER SYSTEMS USE IN-LINE AIR PURGER IN LIEU OF AIR SEPARATOR.
5 SET PRESSURE REDUCING VALVE SO PRESSURE AT HIGHEST POINT IN SYSTEM HAS A MINIMUM OF 4 PSIG. [28kPa]

6 HORIZONTAL EXPANSION TANK-PIPING CONNECTIONS
NTS

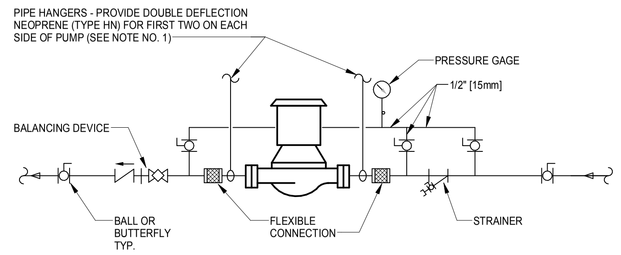

NOTES:
1. SUPPORT PUMP FROM PIPING ONLY. DO NOT SUPPORT PUMP FROM MOTOR.

7 IN-LINE PUMPS - CONNECTIONS
NTS

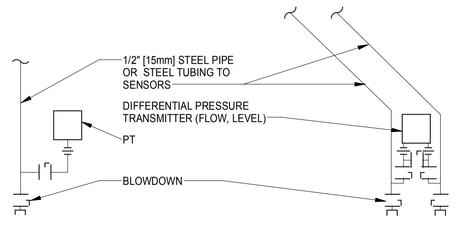

NOTES:
1. INSTALLATION OF SENSORS AND TRANSMITTERS SHALL CONFORM TO RECOMMENDATIONS OF MANUFACTURERS OF TRANSMITTERS.

8 PRESSURE TRANSMITTER INSTALLATION
NTS

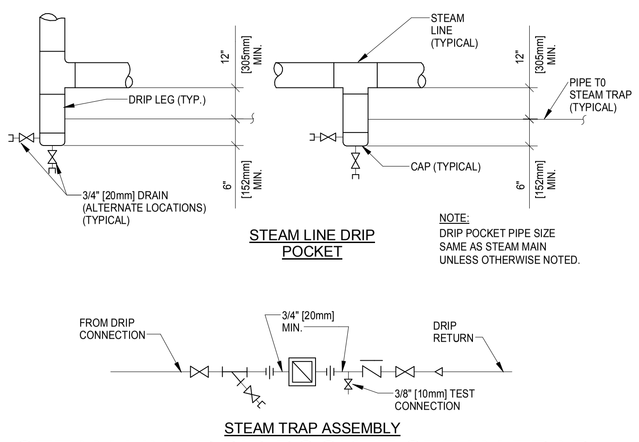

9 STEAM LINE DRIP POCKET STEAM TRAP ASSEMBLY
NTS

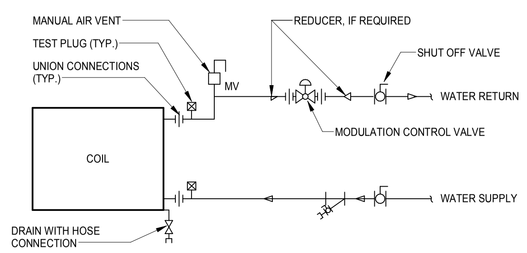

10 TERMINAL UNIT WATER COILS-PIPING CONNECTION
NTS

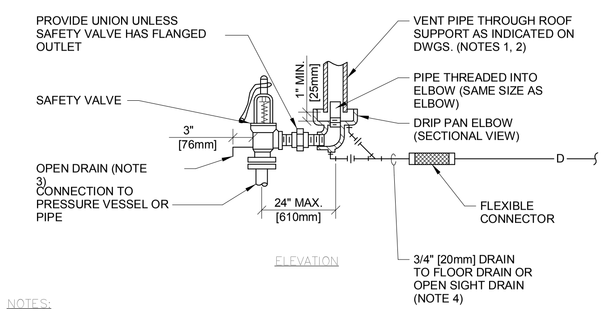

NOTES:
1. UNLESS OTHERWISE SHOWN ON THE DRAWINGS, SIZE THE VENT PIPE SO THAT STEAM IS NOT BLOWN OUT AT THE VENT PIPE ENTRANCE. UTILIZE THE CALCULATION METHOD CONTAINED IN ANSI B31.1. POWER PIPING CODE, APPENDIX II.
2. VENT PIPE SHALL TERMINATE 6' [1829mm] MIN. ABOVE FINISHED ROOF.
3. DISCHARGE OF DRAIN MUST BE DIRECTED AWAY FROM PLATFORMS OR OTHER AREAS WHICH PERSONNEL MAY OCCUPY.
4. DO NOT CONNECT ANY OTHER DRAIN TO THE DRIP PAN ELBOW DRAIN PIPE.

11 STEAM SAFETY VALVE
NTS

100% CONSTRUCTION DOCUMENTS
FULLY SPRINKLERED

Revisions: | Date

VA

SPS BASEMENT ADDITION

2121 LAKE AVE., FORT WAYNE, IN 46805

ARCHITECT/ENGINEERS:

AMERICAN STRUCTUREPOINT INC.
7260 SHADELAND STATION
INDIANAPOLIS, IN 46256-3957
TEL 317.547.5580 FAX 317.543.0270
www.structurepoint.com

Ross&Baruzzini
8250 Haverstick Road
Suite 285
Indianapolis, IN 46240
317.638.8383

CONSULTANTS:

JEFFREY R. CRAWFORD REGISTERED PE 10404134 STATE OF INDIANA PROFESSIONAL ENGINEER
08/15/14

Drawing Title: MECHANICAL PIPING DETAILS

Approved: Project Director

Project Title: SPS BASEMENT ADDITION

Location: 2121 LAKE AVE., FORT WAYNE, IN 46805

Date: 08/15/2014 | Checked: SWD | Drawn: RAC

Project Number: 2010.00629

Building Number: 01

Drawing Number: MP-511

Office of Construction and Facilities Management

VA Department of Veterans Affairs

C:\Users\jkribs\Documents\1724-03_Mechanical Central_jkribs.rvt

8/13/2014 12:07:03 PM

VA FORM 08-6231

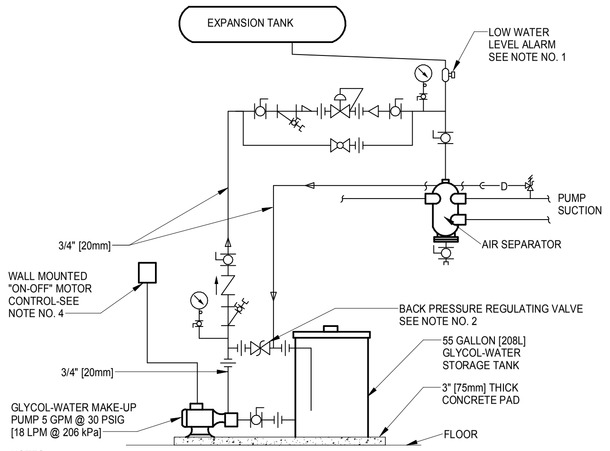

NOTES:
1. PROVIDE LOW WATER LEVEL ALARM. PROVIDE A LOW WATER LEVEL AT ECC. RELIEF VALVE DRAIN SHALL RETURN TO TANK AS SHOWN ON THIS DETAIL.

2. SET REGULATING VALVE TO MAINTAIN MAKE-UP PRESSURE AT 15 PSIG [103 kPa] ABOVE HIGHEST SYSTEM PRV SETTING.

3. MAKE-UP PIPING SYSTEM DOES NOT REQUIRE INSULATION.

4. OPERATE PUMP MANUALLY AS REQUIRED TO FILL.

1 INDIRECT GLYCOL MAKE-UP SYSTEM (PIPING & CONTROLS)

NTS

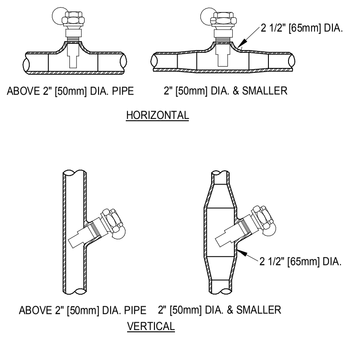

2 INSTALLATION OF THERMOMETER WALLS

NTS

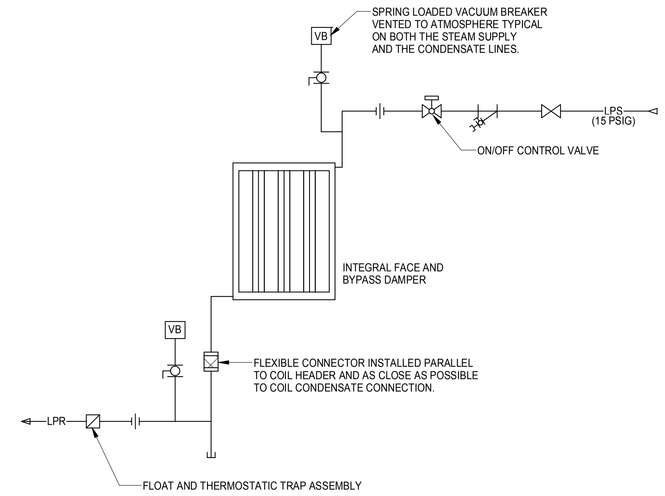

3 INTEGRAL FACE AND BYPASS STEAM COIL DETAIL

NTS

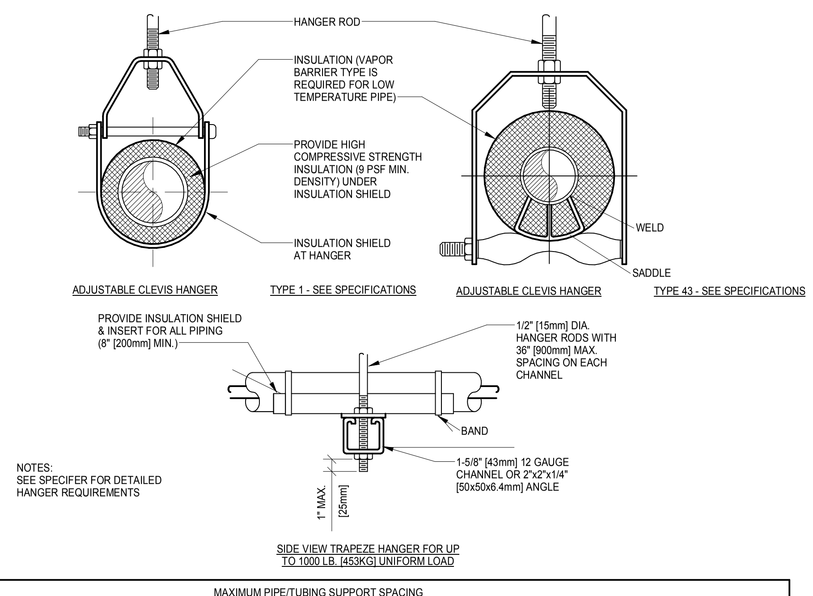

MAXIMUM PIPE/TUBING SUPPORT SPACING																				
NOM. SIZE	IN. [mm]	THRU 3/4 THRU [20]	1 [25]	1 1/4 [32]	1 1/2 [40]	2 [50]	2 1/2 [65]	3 [75]	4 [100]	5 [125]	6 [150]	8 [200]	10 [250]	12 [300]	14 [350]	16 [400]	18 [450]	20 [500]	24 [600]
PIPE	FT. [mm]	7 [2100]	7 [2100]	7 [2100]	9 [2700]	10 [3000]	11 [3400]	12 [3700]	14 [4100]	16 [4900]	17 [5200]	19 [5800]	22 [6700]	23 [7000]	25 [7600]	27 [8200]	28 [8500]	30 [9100]	32 [9600]
TUBING	FT. [mm]	5 FT [1500]	6 [1800]	7 [2100]	8 [2400]	8 [2400]	9 [2700]	10 [3000]	12 [3700]	13 [4000]	14 [4100]	16 [4900]	- -	- -	- -	- -	- -	- -	- -
NOTE: FOR TRAPEZE HANGER TAKE SPACING OF SMALLEST SIZE ON TRAPEZE.																				

4 PIPE HANGERS

NTS

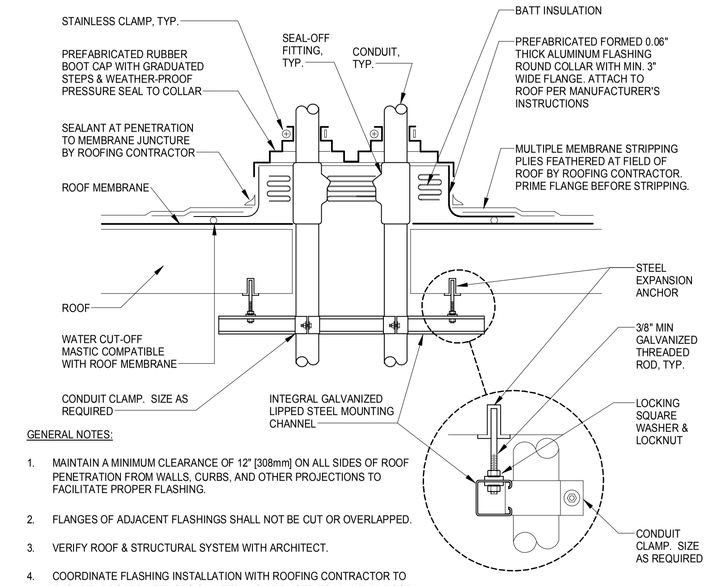

GENERAL NOTES:

1. MAINTAIN A MINIMUM CLEARANCE OF 12" [308mm] ON ALL SIDES OF ROOF PENETRATION FROM WALLS, CURBS, AND OTHER PROJECTIONS TO FACILITATE PROPER FLASHING.

2. FLANGES OF ADJACENT FLASHINGS SHALL NOT BE CUT OR OVERLAPPED.

3. VERIFY ROOF & STRUCTURAL SYSTEM WITH ARCHITECT.

4. COORDINATE FLASHING INSTALLATION WITH ROOFING CONTRACTOR TO ENSURE PROPER METHODS & MATERIALS ARE USED TO MAINTAIN ROOF WARRANTY.

5 ROOF PENETRATION DETAIL

NTS

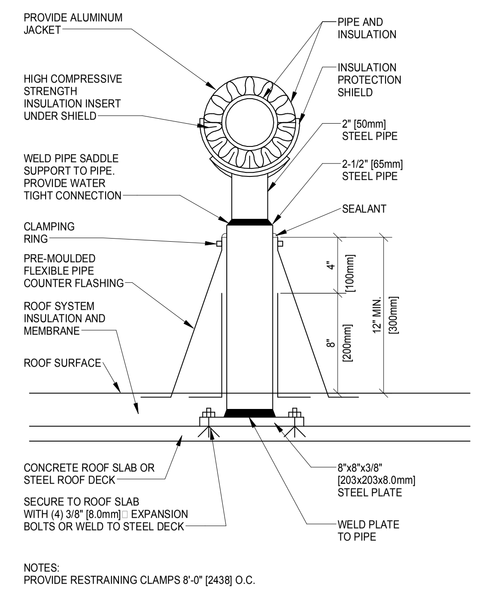

NOTES:
PROVIDE RESTRAINING CLAMPS 8'-0" [2438] O.C.

6 DETAIL FOR SUPPORTING PIPE ON ROOF

NTS

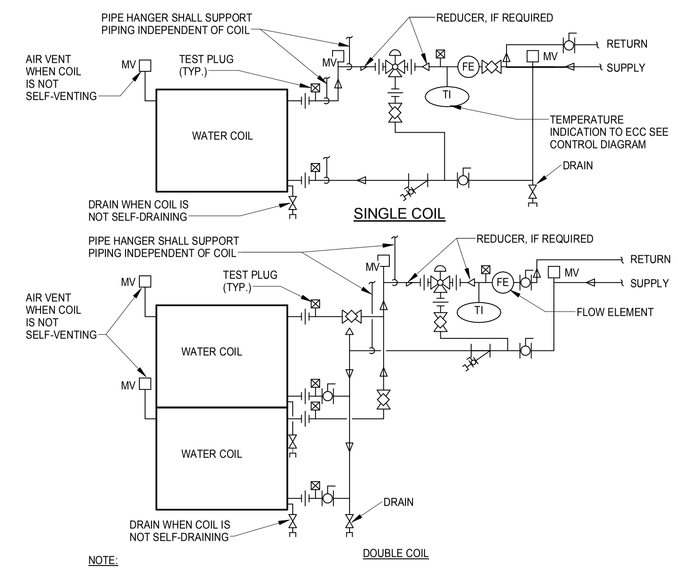

NOTE:

1. WHEN COIL IS INCLUDED IN CASING MOUNTED ON VIBRATION ISOLATORS THE FIRST 2 HANGERS FOR EACH PIPE SHALL BE SPRING & NEOPRENE TYPE. TYPE "H" FOR 4" [100mm] PIPE & SMALLER. TYPE "H-2" FOR 5" [125mm] PIPE & LARGER.

2. PIPING SHALL BE INSTALLED IN SUCH MANNER THAT IT WILL NOT BLOCK THE SWING OR USE OF ACCESS DOORS OR PANELS; NEITHER SHALL IT BLOCK THE SERVICING OF FILTERS, VALES, OR EQUIPMENT.

3. THE FLOW ELEMENT MAY BE INSTALLED IN THE SUPPLY PIPING IF THE REQUIRED MINIMUM UPSTREAM AND DOWNSTREAM DIMENSIONS CANNOT BE OBTAINED IN THE RETURN PIPING.

7 WATER COILS - PIPING CONNECTIONS

NTS

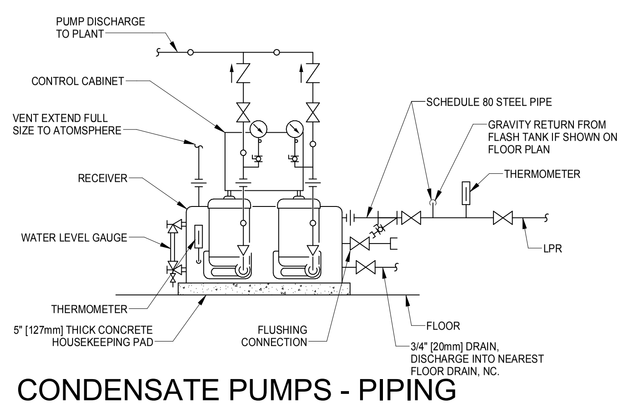

8 CONDENSATE PUMPS - PIPING CONNECTION

NTS

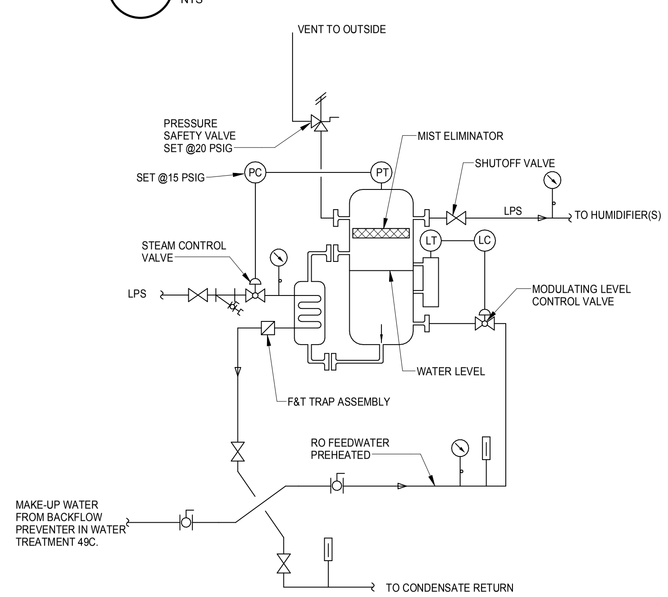

9 CLEAN STEAM GENERATOR

NTS

100% CONSTRUCTION DOCUMENTS
FULLY SPRINKLERED

Revisions:	Date

VA

SPS BASEMENT ADDITION

2121 LAKE AVE., FORT WAYNE, IN 46805

ARCHITECT/ENGINEERS:

AMERICAN STRUCTUREPOINT INC.
7260 SHADELAND STATION
INDIANAPOLIS, IN 46256-3957
TEL 317.547.5580 FAX 317.543.0270
www.structurepoint.com

Ross&Baruzzini
8250 Haverstick Road
Suite 285
Indianapolis, IN 46240
317.638.8383

CONSULTANTS:

JEFFREY R. GRAWCOCK REGISTERED PE 10404134 STATE OF INDIANA PROFESSIONAL ENGINEER
08/15/14

Drawing Title: MECHANICAL PIPING DETAILS

Approved: Project Director

Project Title: SPS BASEMENT ADDITION

Location: 2121 LAKE AVE., FORT WAYNE, IN 46805

Date: 08/15/2014 | Checked: SWD | Drawn: RAC

Project Number: 2010.00629

Building Number: 01

Drawing Number: MP-512

Office of Construction and Facilities Management

VA Department of Veterans Affairs

C:\Users\jkribs\Documents\1724-03_Mechanical Central_jkribs.rvt

8/13/2014 12:07:05 PM

VA FORM 08-6231