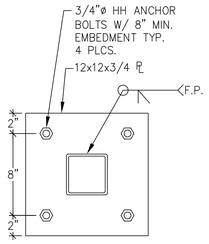

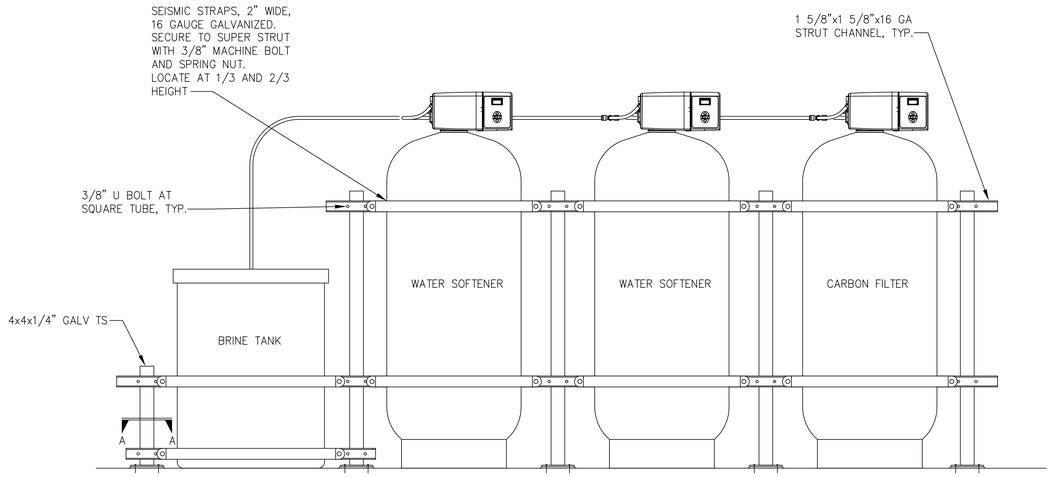

4 WATER SOFTENER SUPPORTS
22A-MS-502 NO SCALE

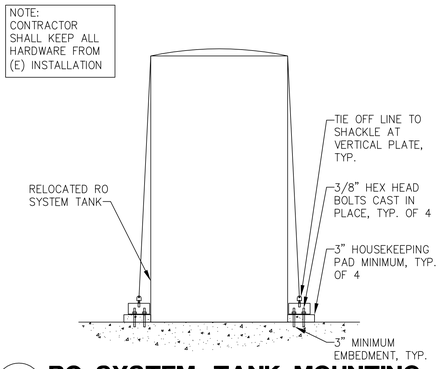

1 RO SYSTEM: TANK MOUNTING
22A-MS-502 NO SCALE

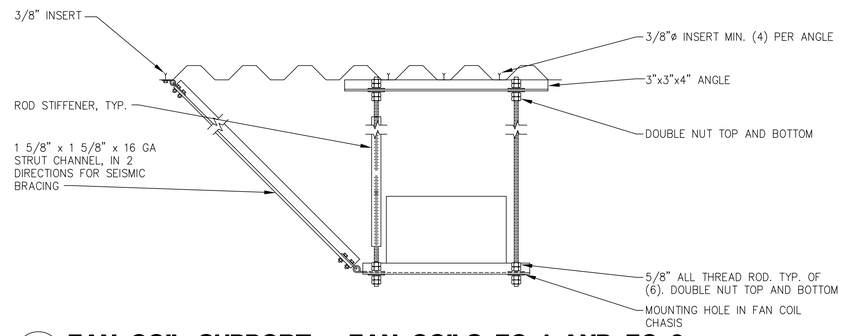

2 FAN COIL SUPPORT - FAN COILS FC-1 AND FC-2
22A-MS-502 NO SCALE

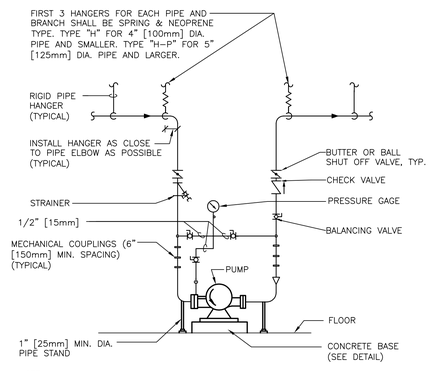

NOTE:
PUMPS ARE VERTICAL INLET AND DISCHARGE

PRIMARY CHILLED WATER AND CONDENSER WATER PUMPS, CHP–X AND CWP–X, ONLY.

DOUBLE SUCTION FLOOR-MOUNTED PUMPS - CONNECTIONS WITH MECHANICAL COUPLINGS
5 22A-MS-502 NO SCALE

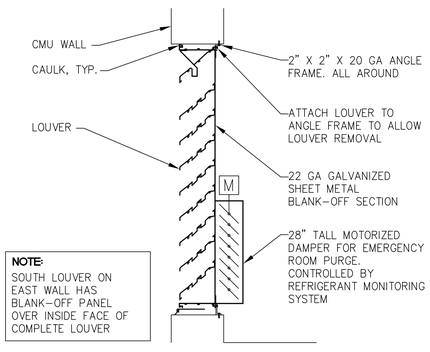

NOTE:
SOUTH LOUVER ON EAST WALL HAS BLANK–OFF PANEL OVER INSIDE FACE OF COMPLETE LOUVER

3 LOUVER (TYP. FOR NORTH (2) LOUVERS)
22A-MS-502 NO SCALE

100% CONSTRUCTION DOCUMENT SUBMITTAL

Revisions:	Date

CONSULTANTS:

vc. (831) 649-8000
fx. (831) 649-8038
email: mail@axiomengineers.com

AXIOM ENGINEERS℠
LEE & ASSOCIATES
CONSULTING ENGINEERS

AE Project # : 20130113

22 Lower Ragsdale Dr., Suite A
Monterey, California 93940-5788

REGISTERED PROFESSIONAL ENGINEER
WILLIAM M. LEE
No. M24908
EXP. SEPT 30, 2015
MECHANICAL
STATE OF CALIFORNIA

ARCHITECT/ENGINEERS:

hfp architects
745 distel drive, suite a
los altos, ca 94022
650·964·4514 fax: 650·967·5148

Drawing Title: DETAILS - NEW	Project Title: VA CENTRAL CALIFORNIA HEALTH CARE SYSTEM NEW BUILDING 22A + CHILLER INFRASTRUCTURE		Project Number: 570-13-300
Approved: Project Director			Building Number: 22A
	Location: FRESNO, CA.		Drawing Number: 22A-MS-502
	Date: 5/08/2015	Checked: WME / Drawn: CADD	Dwg. 62 of 86

Office of Construction and Facilities Management
Department of Veterans Affairs

VA FORM 08-6231