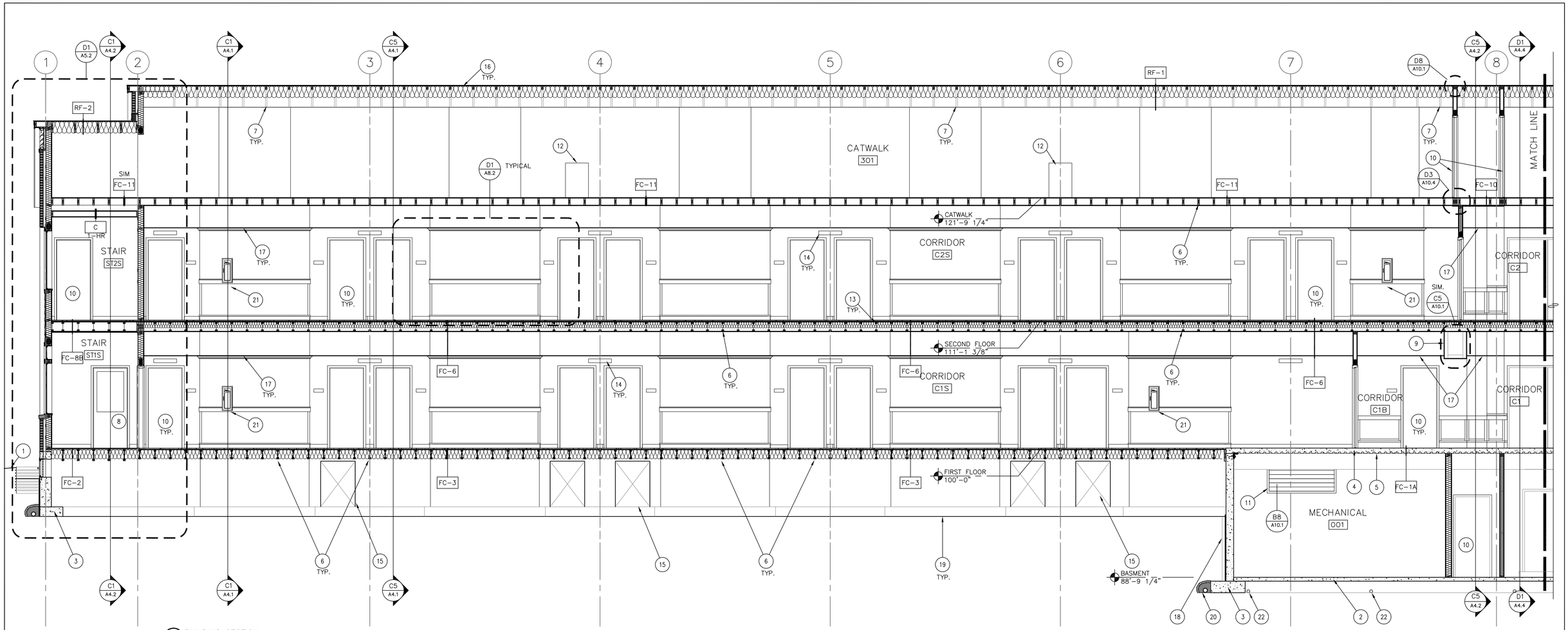

B1 BUILDING SECTION
1/4" = 1'-0"
0 2' 4' 8'
SCALE: 1/4" = 1'-0"

GENERAL NOTES:

A. REFER TO A2.0 FOR BUILDING ASSEMBLIES AND RATED ASSEMBLY PENETRATION INFORMATION. FOR CLARITY NOT ALL RATED ASSEMBLIES ARE NOTED; COORDINATE WITH PLANS.

B. REFERENCE ELEVATIONS NOTED REPRESENT VERTICAL HEIGHTS RELATIVE TO INTERIOR FLOOR DATUM ASSUMED AT 1331.64' [100'-0"], RE: CIVIL DRAWINGS.

C. RE: A9.1 THRU A9.4 FOR CEILING INFORMATION.

D. COORDINATE LIGHTING, ELECTRICAL EQUIPMENT AND FIRE ALARM EQUIPMENT WITH ELECTRICAL DRAWINGS.

E. COORDINATE PLUMBING FIXTURES WITH PLUMBING DRAWINGS.

F. RE: STRUCTURAL DRAWINGS AND SPECIFICATIONS FOR ALL BUILDING SLAB AND FOUNDATION INFORMATION.

G. RE: STRUCTURAL DRAWINGS AND SPECIFICATIONS FOR SIZES AND BEARINGS OF ALL JOISTS, BEAMS, AND TRUSSES.

H. AT SECOND FLOOR CEILINGS TO ATTIC, A SMOKE BARRIER MEMBRANE SHALL BE PROVIDED BY MEANS OF THE LAYER OF GYPSUM BOARD ON THE BOTTOM SIDE OF THE STRUCTURAL FRAMING MEMBERS AND/OR AT THE SUSPENDED GYPSUM BOARD OR SUSPENDED ACOUSTIC CEILING SYSTEM.

SHEET NOTES:

1. FINISH GRADE VARIES, RE: CIVIL DRAWINGS.
2. CAST-IN-PLACE CONCRETE FLOOR SLAB ON VAPOR BARRIER, RE: STRUCTURAL DRAWINGS.
3. CAST-IN-PLACE CONCRETE FOUNDATION SYSTEM, RE: STRUCTURAL DRAWINGS.
4. COMPOSITE CONCRETE FLOOR SYSTEM, RE: STRUCTURAL DRAWINGS.
5. STRUCTURAL STEEL FRAMING, RE: STRUCTURAL DRAWINGS.
6. WOOD JOIST FRAMING, RE: STRUCTURAL DRAWINGS.
7. PREFABRICATED WOOD ROOF TRUSS SYSTEM, RE: STRUCTURAL DRAWINGS.
8. ALUMINUM-FRAMED ENTRANCE SYSTEM DOOR, FRAME AND ASSOCIATED HARDWARE, RE: FLOOR PLANS AND DOOR SCHEDULE.
9. GYPSUM BOARD TO RUN CONTINUOUS ABOVE SOFFIT FRAMING (SMOKE BARRIER MEMBRANE).
10. DOOR, RE: FLOOR PLANS AND DOOR SCHEDULE.
11. HVAC EQUIPMENT, RE: MECHANICAL DRAWINGS.
12. ATTIC ACCESS LOCATION BEYOND.
13. FLOOR/CEILING ASSEMBLY.
14. WALL-MOUNTED LIGHT FIXTURE OR ELECTRICAL EQUIPMENT, RE: ELECTRICAL DRAWINGS.
15. CRAWL SPACE ACCESS LOCATION BEYOND.
16. ROOF/CEILING ASSEMBLY.
17. SUSPENDED ACOUSTICAL CEILING, RE: REFLECTED CEILING PLANS.
18. WATERPROOFING MEMBRANE AND DRAINAGE BOARD.
19. GRADE AT CRAWL SPACE W/VAPOR BARRIER
20. FOUNDATION DRAINAGE SYSTEM, RE: A5.1-D9.
21. FIRE EXTINGUISHER CABINET, RE: A3/A10.4
22. UNDERSLAB DRAIN, RE: STRUCTURAL DRAWINGS.

SECTION KEY PLAN:

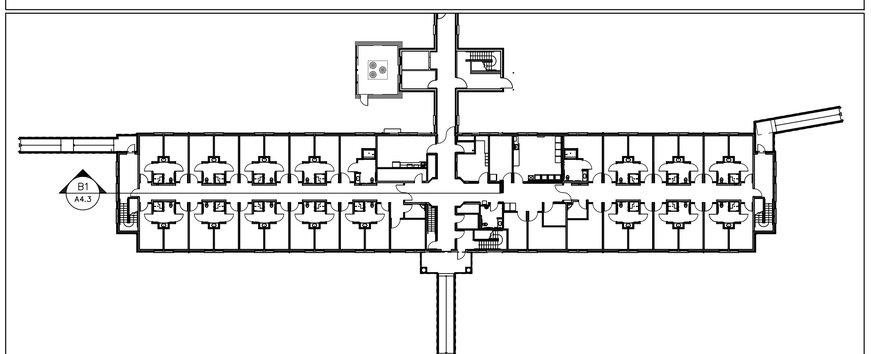

REVISIONS	DATE

REGISTERED ARCHITECT
RAYMOND J. KISTLER
3172
ASHLAND, OREGON
STATE OF OREGON

kistler + small + white architects

KISTLER SMALL WHITE, ARCHITECTS
552 A STREET
ASHLAND, OREGON 97520
P: 541-488-8200
F: 541-552-9512
www.kistlersmallwhite.com

DEPARTMENT OF VETERANS AFFAIRS

SOUTHERN OREGON REHABILITATION CENTER & CLINICS

8495 CRATER LAKE HIGHWAY
WHITE CITY, OREGON

DRAWING TITLE:
BUILDING SECTIONS

FULLY SPRINKLERED FACILITY

PROJECT TITLE
REPLACE DOM BLDG. 203

DRAWN BY:	DATE: 4 AUGUST 2014	DRAWING NO.: A4.3
CHECK BY:	VA PROJECT NO.: 692-339	DWG.30OF 56

US DEPARTMENT OF VETERANS AFFAIRS

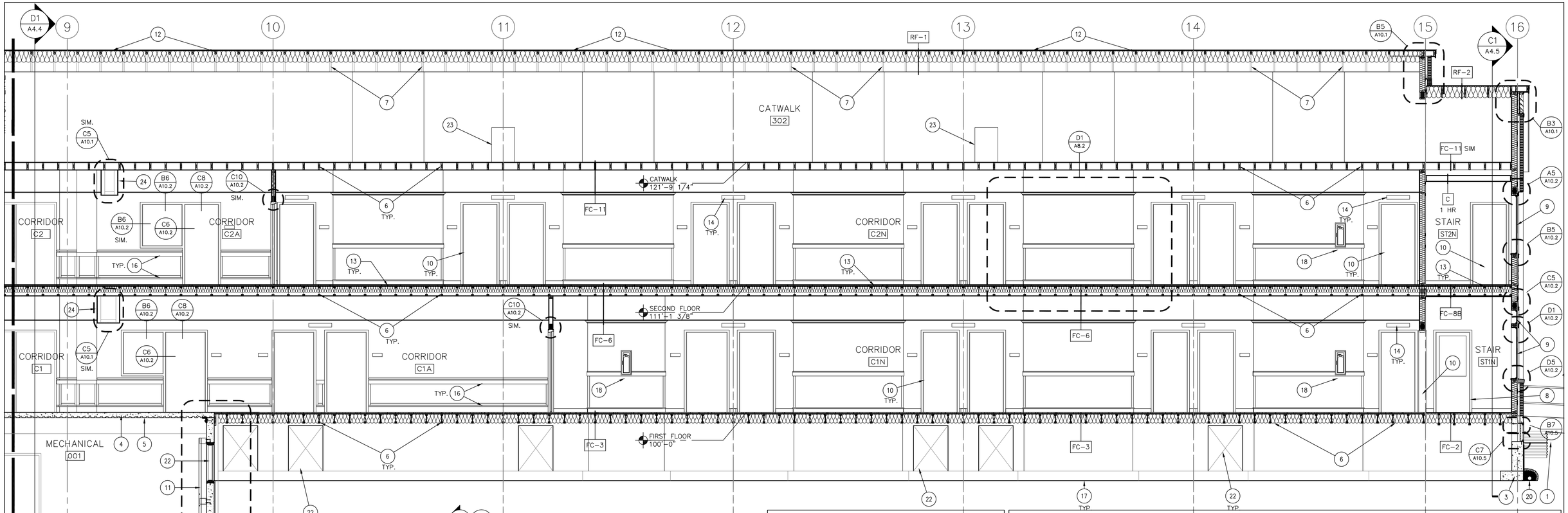

B1 BUILDING SECTION
1/4" = 1'-0"

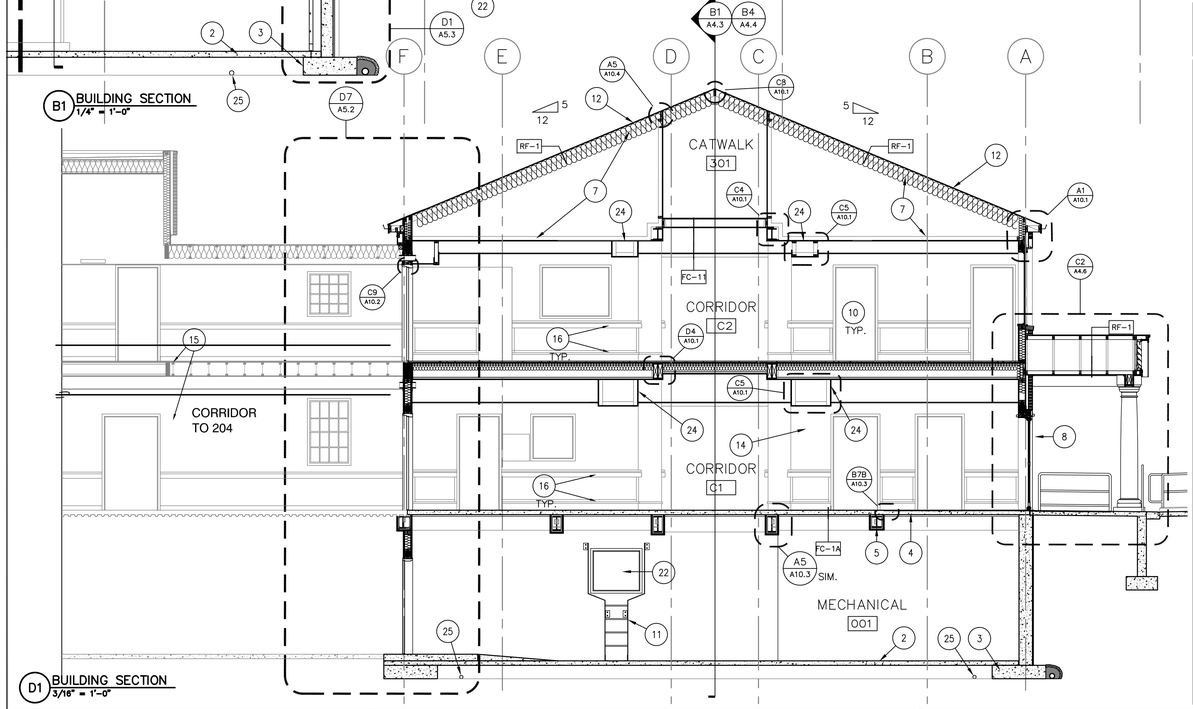

D1 BUILDING SECTION
3/16" = 1'-0"

SHEET NOTES:

1. FINISH GRADE VARIES, RE: CIVIL DRAWINGS.
2. CAST-IN-PLACE CONCRETE FLOOR SLAB ON VAPOR BARRIER, RE: STRUCTURAL DRAWINGS.
3. CAST-IN-PLACE CONCRETE FOUNDATION SYSTEM, RE: STRUCTURAL DRAWINGS.
4. COMPOSITE CONCRETE FLOOR SYSTEM, RE: STRUCTURAL DRAWINGS.
5. STRUCTURAL STEEL FRAMING, RE: STRUCTURAL DRAWINGS.
6. WOOD JOIST FRAMING, RE: STRUCTURAL DRAWINGS.
7. PREFABRICATED WOOD ROOF TRUSS SYTEM, RE: STRUCTURAL DRAWINGS.
8. ALUMINUM-FRAMED ENTRANCE SYSTEM DOOR, RE: FLOOR PLANS AND DOOR SCHEDULE.
9. VINYL WINDOW SYSTEM.
10. DOOR, RE: DOOR SCHEDULE.
11. ACCESS LADDER TO CRAWL SPACE.
12. ROOF/CEILING ASSEMBLY.
13. FLOOR/CEILING ASSEMBLY.
14. WALL-MOUNTED LIGHT FIXTURE OR ELECTRICAL EQUIPMENT, RE: ELECTRICAL DRAWINGS.
15. RETAIN AND PROTECT EXISTING CONSTRUCTION.
16. CRASH RAIL/HANDRAIL/WAINSCOT SYSTEM, RE: A10.3-D8.
17. GRADE AT CRAWL SPACE W/VAPOR BARRIER
18. FIRE EXTINGUISHER CABINET, RE: A3/A10.4.
19. WC-1 CONTINUES AND WRAPS END OF CORRIDOR WALL.
20. FOUNDATION DRAINAGE SYSTEM, RE: A5.1-D9.
21. NOT USED.
22. CRAWL SPACE ACCESS DOOR.
23. ATTIC ACCESS OPENING BEYOND.
24. GYPSUM BOARD TO RUN CONTINUOUS ABOVE SOFFIT FRAMING (SMOKE BARRIER MEMBRANE).
25. UNDERSLAB DRAIN, RE: STRUCTURAL DRAWINGS.

GENERAL NOTES:

A. REFER TO A2.0 FOR BUILDING ASSEMBLIES AND RATED ASSEMBLY PENETRATION INFORMATION. FOR CLARITY NOT ALL RATED ASSEMBLIES ARE NOTED; COORDINATE WITH PLANS.

B. REFERENCE ELEVATIONS NOTED REPRESENT VERTICAL HEIGHTS RELATIVE TO INTERIOR FLOOR DATUM ASSUMED AT 1331.64' [100'-0"], RE: CIVIL DRAWINGS.

C. RE: A9.1 THRU A9.4 FOR CEILING INFORMATION.

D. COORDINATE LIGHTING, ELECTRICAL EQUIPMENT AND FIRE ALARM EQUIPMENT WITH ELECTRICAL DRAWINGS.

E. COORDINATE PLUMBING FIXTURES WITH PLUMBING DRAWINGS.

F. RE: STRUCTURAL DRAWINGS AND SPECIFICATIONS FOR ALL BUILDING SLAB AND FOUNDATION INFORMATION.

G. RE: STRUCTURAL DRAWINGS AND SPECIFICATIONS FOR SIZES AND BEARINGS OF ALL JOISTS, BEAMS, AND TRUSSES.

H. AT SECOND FLOOR CEILINGS TO ATTIC, A SMOKE BARRIER MEMBRANE SHALL BE PROVIDED BY MEANS OF THE LAYER OF GYPSUM BOARD ON THE BOTTOM SIDE OF THE STRUCTURAL FRAMING MEMBERS AND/OR AT THE SUSPENDED GYPSUM BOARD OR SUSPENDED ACOUSTIC CEILING SYSTEM.

SECTION KEY PLAN:

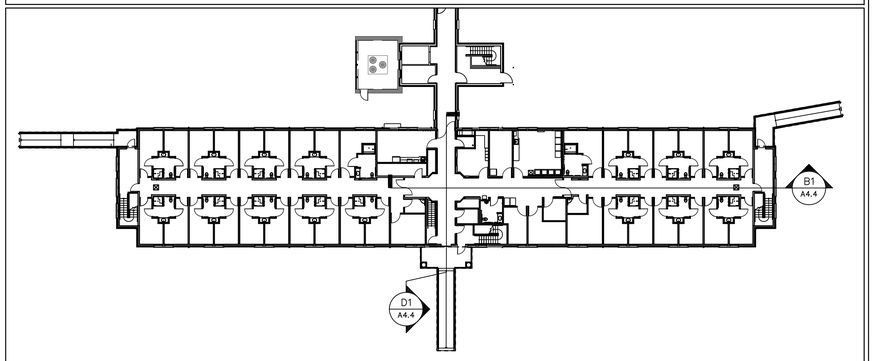

REVISIONS	DATE

REGISTERED ARCHITECT
RAYMOND J. KISTLER
3172
ASHLAND, OREGON
STATE OF OREGON

kistler + small + white architects

KISTLER SMALL WHITE, ARCHITECTS
552 A STREET
ASHLAND, OREGON 97520
P: 541-488-8200
F: 541-552-9512
www.kistlersmallwhite.com

DEPARTMENT OF VETERANS AFFAIRS

SOUTHERN OREGON REHABILITATION CENTER & CLINICS

8495 CRATER LAKE HIGHWAY
WHITE CITY, OREGON

DRAWING TITLE:

BUILDING SECTIONS

FULLY SPRINKLERED FACILITY

PROJECT TITLE
REPLACE DOM BLDG. 203

DRAWN BY:	DATE: 4 AUGUST 2014	DRAWING NO.: A4.4
CHECK BY:	VA PROJECT NO.: 692-339	DWG.31 OF 56

US DEPARTMENT OF VETERANS AFFAIRS

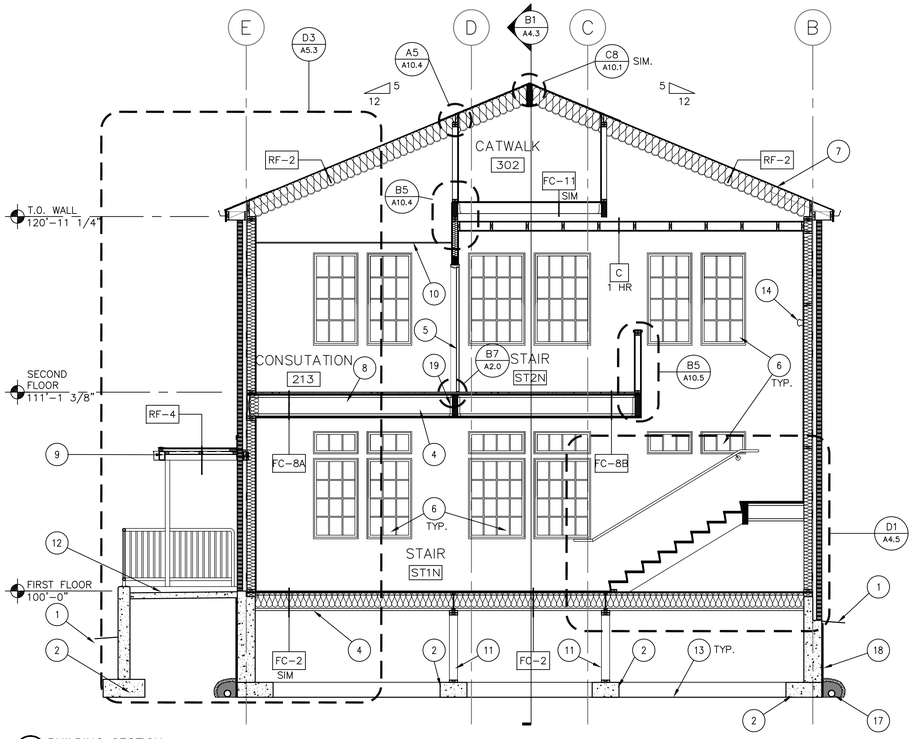

C1 BUILDING SECTION
1/4" = 1'-0"

0 2' 4' 8'

SCALE: 1/4" = 1'-0"

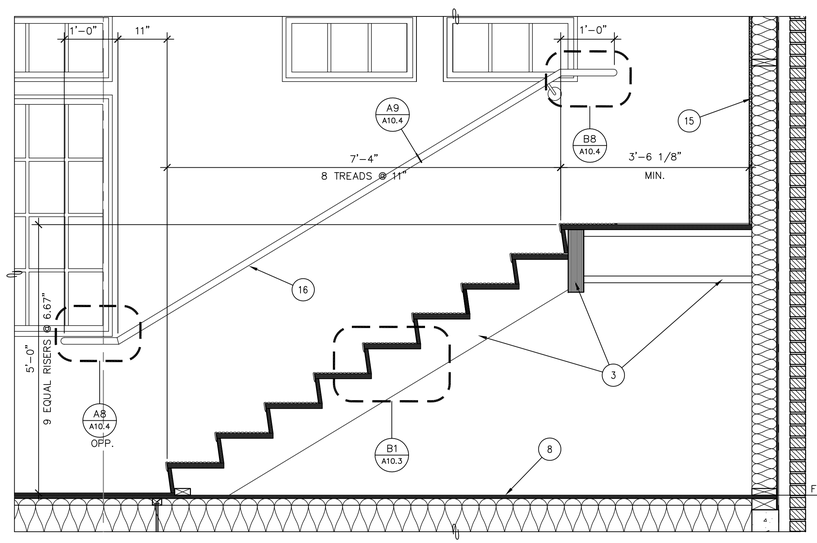

D1 STAIR SECTION
3/4" = 1'-0"

0 1 2 4

SCALE: 3/4"= 1'-0"

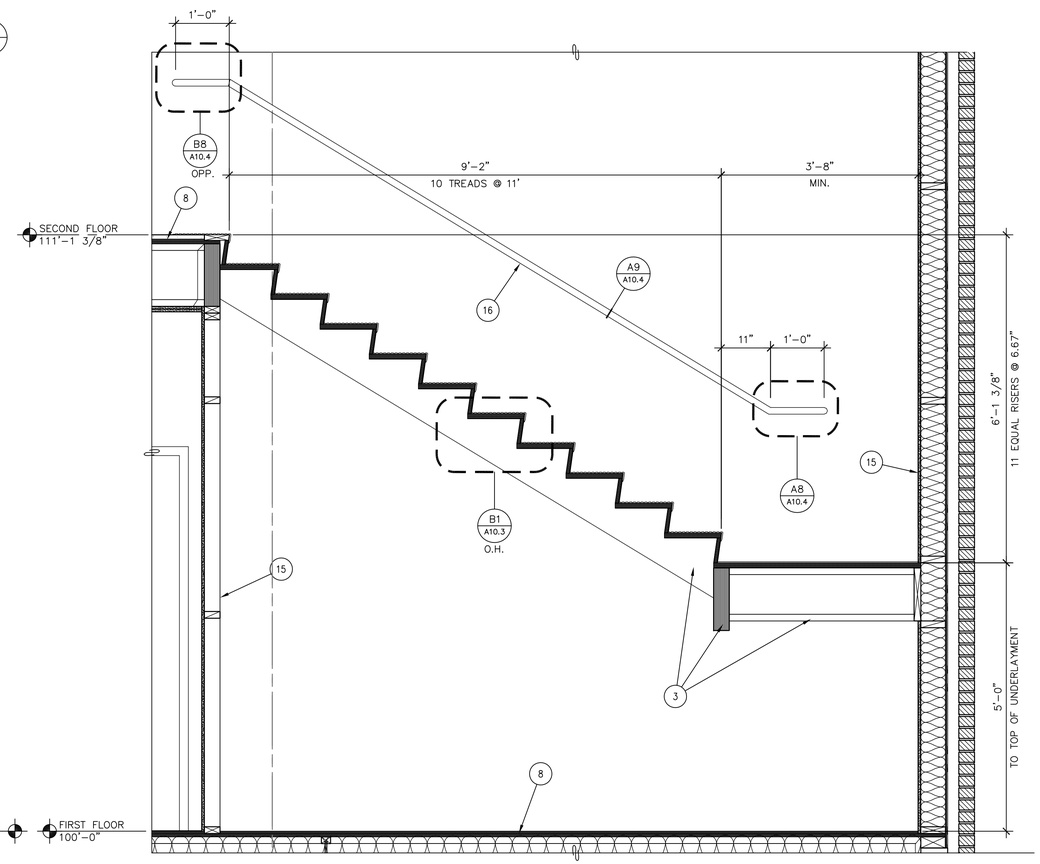

D5 STAIR SECTION
3/4" = 1'-0"

0 1 2 4

SCALE: 3/4"= 1'-0"

GENERAL NOTES:

A. REFER TO A2.0 FOR BUILDING ASSEMBLIES AND RATED ASSEMBLY PENETRATION INFORMATION. FOR CLARITY NOT ALL RATED ASSEMBLIES ARE NOTED; COORDINATE WITH PLANS.

B. REFERENCE ELEVATIONS NOTED REPRESENT VERTICAL HEIGHTS RELATIVE TO INTERIOR FLOOR DATUM ASSUMED AT 1331.64' [100'-0"], RE: CIVIL DRAWINGS.

C. RE: A9.1 THRU A9.4 FOR CEILING INFORMATION.

D. COORDINATE LIGHTING, ELECTRICAL EQUIPMENT AND FIRE ALARM EQUIPMENT WITH ELECTRICAL DRAWINGS.

E. COORDINATE PLUMBING FIXTURES WITH PLUMBING DRAWINGS.

F. RE: STRUCTURAL DRAWINGS AND SPECIFICATIONS FOR ALL BUILDING SLAB AND FOUNDATION INFORMATION.

G. RE: STRUCTURAL DRAWINGS AND SPECIFICATIONS FOR SIZES AND BEARINGS OF ALL JOISTS, BEAMS, AND TRUSSES.

H. H. AT SECOND FLOOR CEILINGS TO ATTIC, A SMOKE BARRIER MEMBRANE SHALL BE PROVIDED BY MEANS OF THE LAYER OF GYPSUM BOARD ON THE BOTTOM SIDE OF THE STRUCTURAL FRAMING MEMBERS AND/OR AT THE SUSPENDED GYPSUM BOARD OR SUSPENDED ACOUSTIC CEILING SYSTEM.

SECTION KEY PLAN:

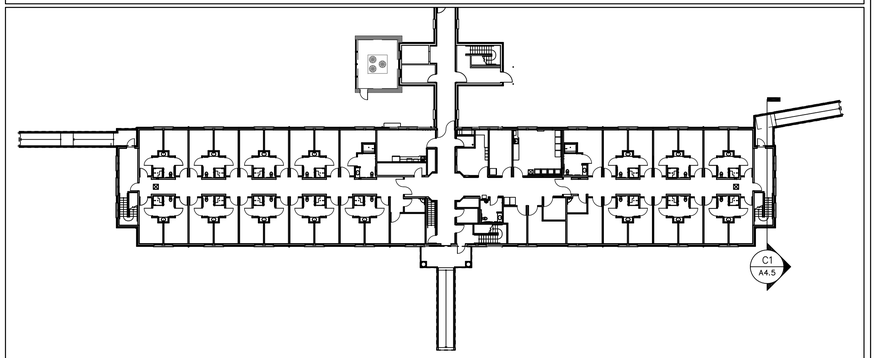

SHEET NOTES:

1. FINISH GRADE VARIES, RE: CIVIL DRAWINGS.
2. CAST-IN-PLACE CONCRETE FOUNDATION SYSTEM, RE: STRUCTURAL DRAWINGS.
3. STRUCTURAL FRAMING, RE: STRUCTURAL DRAWINGS.
4. WOOD JOIST FRAMING, RE: STRUCTURAL DRAWINGS.
5. DOOR, RE: FLOOR PLANS AND DOOR SCHEDULE.
6. VINYL WINDOW SYSTEM.
7. ROOF/CEILING ASSEMBLY, RE: FLOOR PLANS.
8. FLOOR/CEILING ASSEMBLY, RE: FLOOR PLANS.
9. EXTERIOR CANOPY.
10. SUSPENDED ACOUSTICAL CEILING SYSTEM, RE: REFLECTED CEILING PLANS.
11. CRIPPLE WALL, RE: STRUCTURAL DRAWINGS.
12. CAST-IN-PLACE CONCRETE SLAB, RE: STRUCTURAL DRAWINGS.
13. GRADE AT CRAWL SPACE W/VAPOR BARRIER
14. LIGHT FIXTURE, RE: ELECTRICAL DRAWINGS.
15. WALL ASSEMBLY, RE: FLOOR PLANS.
16. STEEL HANDRAIL SYSTEM, PAINTED.
17. FOUNDATION DRAINAGE SYSTEM, RE: A5.1-D9.
18. WATERPROOFING MEMBRANE AND DRAINAGE BOARD.
19. PROVIDE SOLID BLOCKING FOR FULL WIDTH OF WALLS ABOVE AND BELOW FLOOR ASSEMBLY TO MAINTAIN INTEGRITY OF RATED WALLS.

REVISIONS	DATE

REGISTERED ARCHITECT
RAYMOND J. KISTLER
3172
ASHLAND, OREGON
STATE OF OREGON

kistler + small + white architects

KISTLER SMALL WHITE, ARCHITECTS
552 A STREET
ASHLAND, OREGON 97520
P: 541-488-8200
F: 541-552-9512
www.kistlersmallwhite.com

DEPARTMENT OF VETERANS AFFAIRS

SOUTHERN OREGON REHABILITATION CENTER & CLINICS

8495 CRATER LAKE HIGHWAY
WHITE CITY, OREGON

DRAWING TITLE:
BUILDING SECTIONS

FULLY SPRINKLERED FACILITY

PROJECT TITLE
REPLACE DOM BLDG. 203

DRAWN BY:	DATE: 4 AUGUST 2014	DRAWING NO.: A4.5
CHECK BY:	VA PROJECT NO.: 692-339	DWG 32OF 56

DEPARTMENT OF VETERANS AFFAIRS

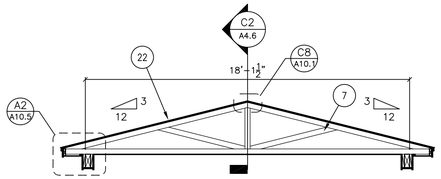

A1 ENTRY PORCH SECTION
1/4" = 1'-0"

0 2' 4' 8'

SCALE: 1/4" = 1'-0"

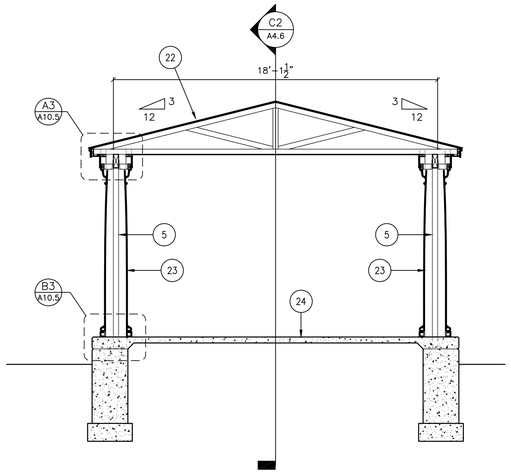

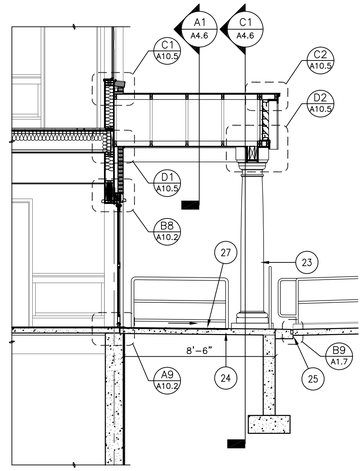

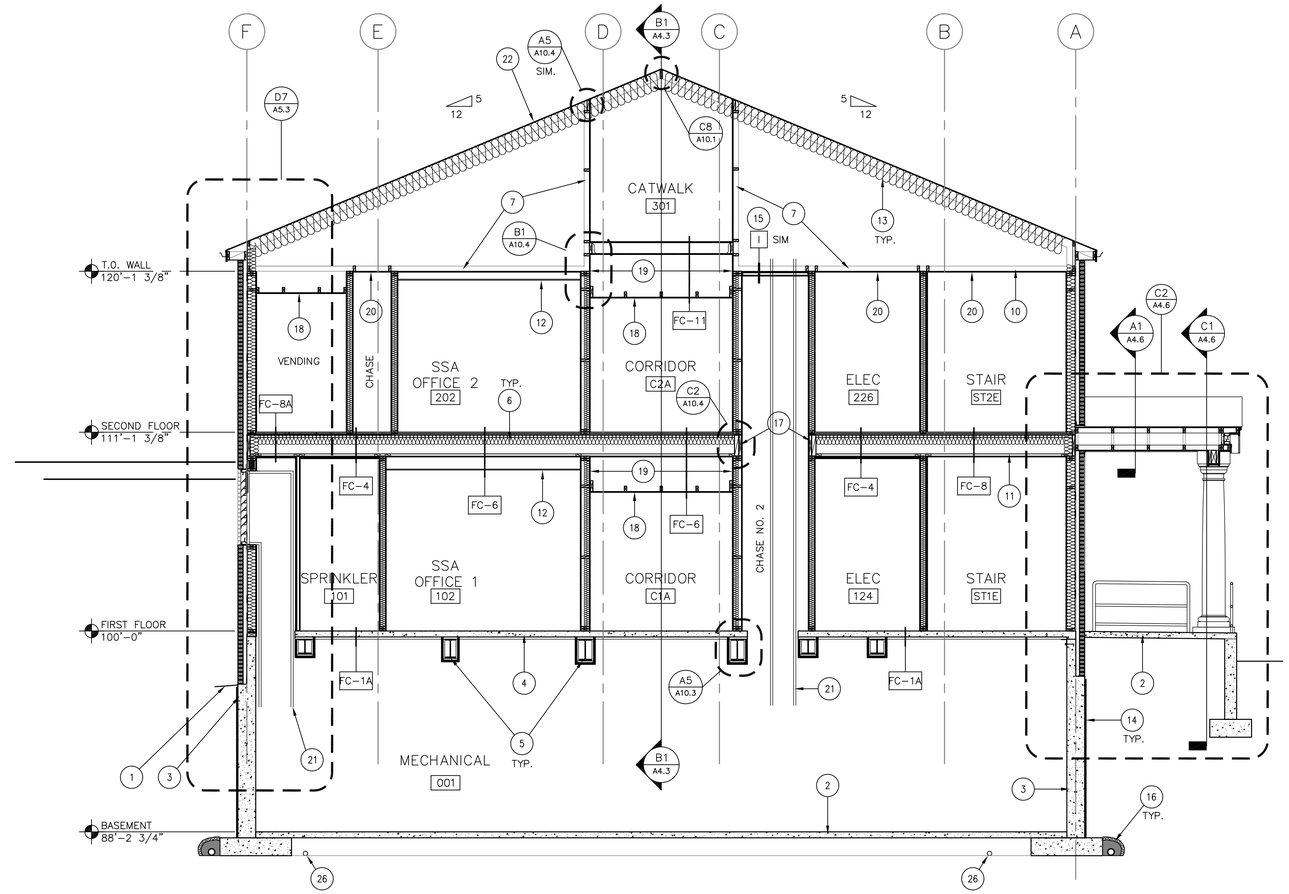

C1 ENTRY PORCH SECTION
1/4" = 1'-0"

0 2' 4' 8'

SCALE: 1/4" = 1'-0"

C2 ENTRY PORCH SECTION
1/4" = 1'-0"

0 2' 4' 8'

SCALE: 1/4" = 1'-0"

C3 BUILDING SECTION
1/4" = 1'-0"

0 2' 4' 8'

SCALE: 1/4" = 1'-0"

GENERAL NOTES:

A. REFER TO A2.0 FOR BUILDING ASSEMBLIES AND RATED ASSEMBLY PENETRATION INFORMATION. FOR CLARITY NOT ALL RATED ASSEMBLIES ARE NOTED; COORDINATE WITH PLANS.

B. REFERENCE ELEVATIONS NOTED REPRESENT VERTICAL HEIGHTS RELATIVE TO INTERIOR FLOOR DATUM ASSUMED AT 1331.64' [100'-0"], RE: CIVIL DRAWINGS.

C. RE: A9.1 THRU A9.4 FOR CEILING INFORMATION.

D. COORDINATE LIGHTING, ELECTRICAL EQUIPMENT AND FIRE ALARM EQUIPMENT WITH ELECTRICAL DRAWINGS.

E. COORDINATE PLUMBING FIXTURES WITH PLUMBING DRAWINGS.

F. RE: STRUCTURAL DRAWINGS AND SPECIFICATIONS FOR ALL BUILDING SLAB AND FOUNDATION INFORMATION.

G. RE: STRUCTURAL DRAWINGS AND SPECIFICATIONS FOR SIZES AND BEARINGS OF ALL JOISTS, BEAMS, AND TRUSSES.

H. AT SECOND FLOOR CEILINGS TO ATTIC, A SMOKE BARRIER MEMBRANE SHALL BE PROVIDED BY MEANS OF THE LAYER OF GYPSUM BOARD ON THE BOTTOM SIDE OF THE STRUCTURAL FRAMING MEMBERS AND/OR AT THE SUSPENDED GYPSUM BOARD OR SUSPENDED ACOUSTIC CEILING SYSTEM.

SHEET NOTES:

1. FINISH GRADE VARIES, RE: CIVIL DRAWINGS.
2. CAST-IN-PLACE CONCRETE FLOOR SLAB ON VAPOR BARRIER, RE: STRUCTURAL DRAWINGS.
3. CAST-IN-PLACE CONCRETE FOUNDATION SYSTEM, RE: STRUCTURAL DRAWINGS.
4. COMPOSITE CONCRETE FLOOR SYSTEM, RE: STRUCTURAL DRAWINGS.
5. STRUCTURAL STEEL FRAMING, RE: STRUCTURAL DRAWINGS.
6. WOOD JOIST FRAMING, RE: STRUCTURAL DRAWINGS.
7. PREFABRICATED WOOD ROOF TRUSS SYTEM, RE: STRUCTURAL DRAWINGS.
8. VINYL WINDOW SYSTEM.
9. DOOR, RE: DOOR SCHEDULE.
10. ROOF/CEILING ASSEMBLY.
11. FLOOR/CEILING ASSEMBLY.
12. SUSPENDED ACOUSTICAL CEILING, RE: REFLECTED CEILING PLANS.
13. 11 7/8" SPRAYED ICYNENE INSULATION.
14. WATERPROOFING MEMBRANE AND DRAINAGE BOARD.
15. TERMINATION OF 1 HR RATED VERTICAL SHAFT ENCLOSURE AT BOTTOM SIDE OF ROOF TRUSSES, TYPICAL. PROVIDE 1 HR- RATED HORIZONTAL ASSEMBLY,
16. FOUNDATION DRAINAGE SYSTEM, RE: A5.1-D9.
17. PROVIDE SOLID BLOCKING FOR FULL WIDTH OF WALLS ABOVE AND BELOW FLOOR ASSEMBLY TO MAINTAIN INTEGRITY OF RATED WALLS.
18. GYPSUM BOARD SOFFIT W/ 5/8" GWB, 2x4 JOISTS & 2x8 LEDGERS & BM'S.
19. GYPSUM BOARD TO RUN CONTINUOUS ABOVE SOFFIT FRAMING (SMOKE BARRIER MEMBRANE).
20. 5/8" GWB.
21. DUCTWORK, RE: MECHANICAL DRAWINGS.
22. COMPOSITION SHINGLE ROOFING ON ROOF PAPER ON PLY. SHT'G.
23. 16"ø FIBERGLASS COMPOSITE COLUMN.
24. SLOPE CONC. SLAB @ 1/8" PER 12" AWAY FROM BUILDING.
25. PVC STRIP DRAIN AT BOTTOM OF RAMP.
26. UNDERSLAB DRAIN, RE: STRUCTURAL DRAWINGS.
27. RECESSED WALK-OFF MAT

SECTION KEY PLAN:

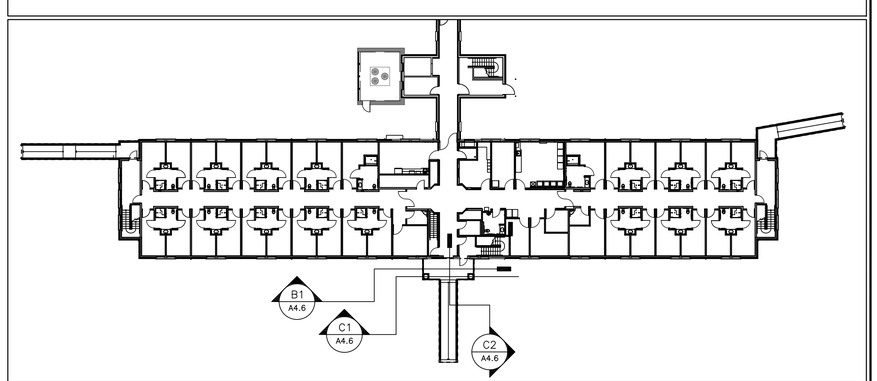

REVISIONS	DATE

REGISTERED ARCHITECT
RAYMOND J. KISTLER
3172
ASHLAND, OREGON
STATE OF OREGON

kistler+ small +white architects

KISTLER SMALL WHITE, ARCHITECTS
552 A STREET
ASHLAND, OREGON 97520
P: 541-488-8200
F: 541-552-9512
www.kistlersmallwhite.com

DEPARTMENT OF VETERANS AFFAIRS

SOUTHERN OREGON REHABILITATION CENTER & CLINICS

8495 CRATER LAKE HIGHWAY
WHITE CITY, OREGON

DRAWING TITLE:

BUILDING SECTIONS

FULLY SPRINKLERED FACILITY

PROJECT TITLE
REPLACE DOM BLDG. 203

DRAWN BY:

DATE: 4 AUGUST 2014

CHECK BY:

VA PROJECT NO.: 692-339

DRAWING NO.: A4.6

DWG.33OF 56

US DEPARTMENT OF VETERANS AFFAIRS

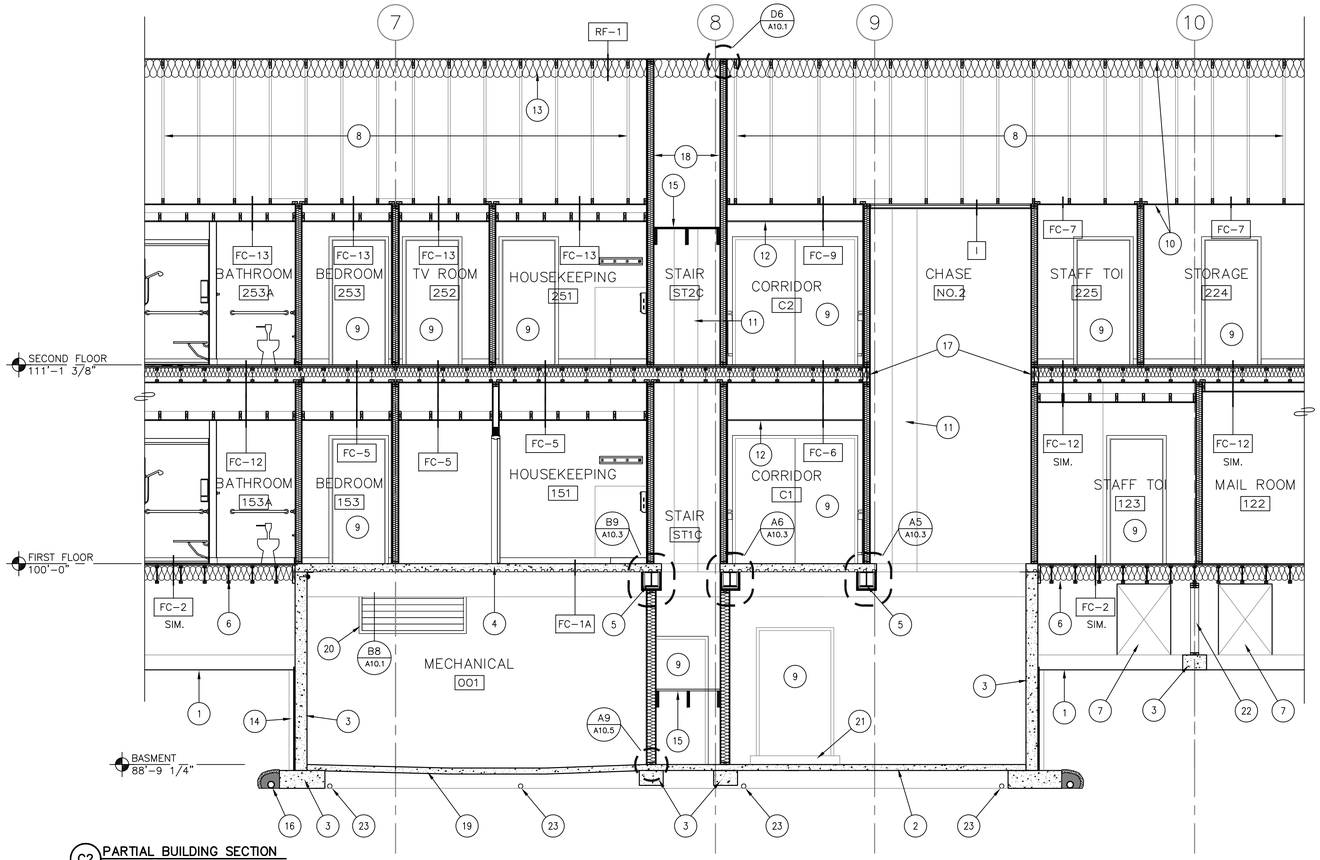

C2 PARTIAL BUILDING SECTION
1/4" = 1'-0"

0 2' 4' 8'

SCALE: 1/4" = 1'-0"

GENERAL NOTES:

A. REFER TO A2.0 FOR BUILDING ASSEMBLIES AND RATED ASSEMBLY PENETRATION INFORMATION. FOR CLARITY NOT ALL RATED ASSEMBLIES ARE NOTED; COORDINATE WITH PLANS.

B. REFERENCE ELEVATIONS NOTED REPRESENT VERTICAL HEIGHTS RELATIVE TO INTERIOR FLOOR DATUM ASSUMED AT 1331.64' [100'-0"], RE: CIVIL DRAWINGS.

C. RE: A9.1 THRU A9.4 FOR CEILING INFORMATION.

D. COORDINATE LIGHTING, ELECTRICAL EQUIPMENT AND FIRE ALARM EQUIPMENT WITH ELECTRICAL DRAWINGS.

E. COORDINATE PLUMBING FIXTURES WITH PLUMBING DRAWINGS.

F. RE: STRUCTURAL DRAWINGS AND SPECIFICATIONS FOR ALL BUILDING SLAB AND FOUNDATION INFORMATION.

G. RE: STRUCTURAL DRAWINGS AND SPECIFICATIONS FOR SIZES AND BEARINGS OF ALL JOISTS, BEAMS, AND TRUSSES.

H. AT SECOND FLOOR CEILINGS TO ATTIC, A SMOKE BARRIER MEMBRANE SHALL BE PROVIDED BY MEANS OF THE LAYER OF GYPSUM BOARD ON THE BOTTOM SIDE OF THE STRUCTURAL FRAMING MEMBERS AND/OR AT THE SUSPENDED GYPSUM BOARD OR SUSPENDED ACOUSTIC CEILING SYSTEM.

SHEET NOTES:

1. GRADE AT CRAWL SPACE W/VAPOR BARRIER
2. CAST-IN-PLACE CONCRETE FLOOR SLAB ON VAPOR BARRIER, RE: STRUCTURAL DRAWINGS.
3. CAST-IN-PLACE CONCRETE FOUNDATION SYSTEM, RE: STRUCTURAL DRAWINGS.
4. COMPOSITE CONCRETE FLOOR SYSTEM, RE: STRUCTURAL DRAWINGS.
5. STRUCTURAL STEEL FRAMING, RE: STRUCTURAL DRAWINGS.
6. WOOD JOIST FRAMING, RE: STRUCTURAL DRAWINGS.
7. CRAWL SPACE ACCESS OPENING BEYOND.
8. PREFABRICATED ROOF TRUSS SYSTEM, RE: STRUCTURAL DRAWINGS.
9. DOOR, RE: DOOR SCHEDULE.
10. ROOF/CEILING ASSEMBLY.
11. ANGLED WALL BEYOND.
12. SUSPENDED ACOUSTICAL CEILING, RE: REFLECTED CEILING PLANS.
13. 11 7/8" SPRAYED ICYNENE INSULATION.
14. WATERPROOFING MEMBRANE AND DRAINAGE BOARD.
15. STAIR TREAD & FRAMING, RE: B1-A10.3, STRUCTURAL DRAWINGS.
16. FOUNDATION DRAINAGE SYSTEM, RE: A5.1-D9.
17. PROVIDE SOLID BLOCKING FOR FULL WIDTH OF WALLS ABOVE AND BELOW FLOOR ASSEMBLY TO MAINTAIN INTEGRITY OF RATED WALLS.
18. RATED ASSEMBLY EXTENDS TO UNDERSIDE OF ROOF SHEATHING, TYP.
19. CAST-IN-PLACE CONCRETE FLOOR SLAB - SLOPE TO FLOOR DRAIN, RE: STRUCTURAL DRAWINGS.
20. HVAC EQUIPMENT, RE: MECHANICAL DRAWINGS.
21. CAST-IN-PLACE CONCRETE RAMP AND LANDING FOR DOOR TO TUNNEL, VERIFY ELEVATION OF TUNNEL.
22. CRIPPLE WALL, RE: STRUCTURAL DRAWINGS.
23. UNDERSLAB DRAIN, RE: STRUCTURAL DRAWINGS.

SECTION KEY PLAN:

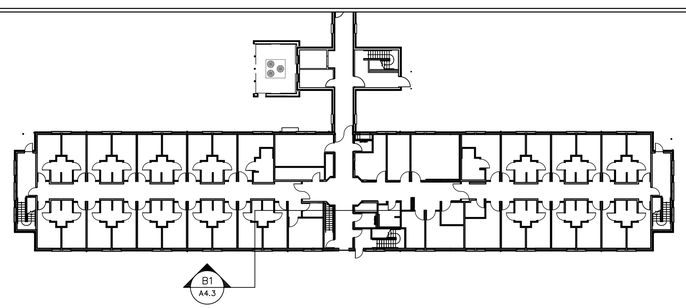

REVISIONS	DATE

REGISTERED ARCHITECT
RAYMOND J. KISTLER
3172
ASHLAND, OREGON
STATE OF OREGON

kistler+ small +white architects

KISTLER SMALL WHITE, ARCHITECTS
552 A STREET
ASHLAND, OREGON 97520
P: 541-488-8200
F: 541-552-9512
www.kistlersmallwhite.com

DEPARTMENT OF VETERANS AFFAIRS

SOUTHERN OREGON REHABILITATION CENTER & CLINICS

8495 CRATER LAKE HIGHWAY
WHITE CITY, OREGON

DRAWING TITLE:

BUILDING SECTIONS

FULLY SPRINKLERED FACILITY

PROJECT TITLE
REPLACE DOM BLDG. 203

DRAWN BY:	DATE: 4 AUGUST 2014	DRAWING NO.: A4.7
CHECK BY:	VA PROJECT NO.: 692-339	DWG.34OF 56

US DEPARTMENT OF VETERANS AFFAIRS

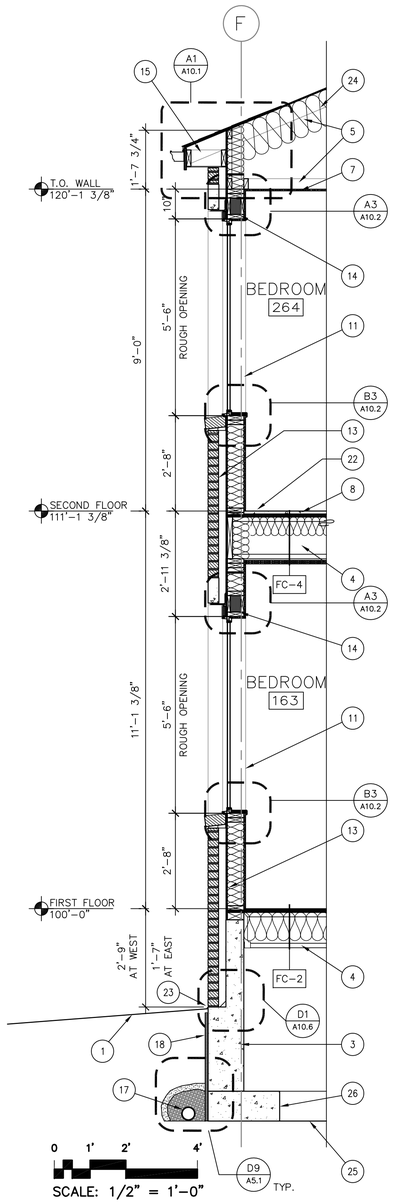

D1 WALL SECTION
1/2" = 1'-0"

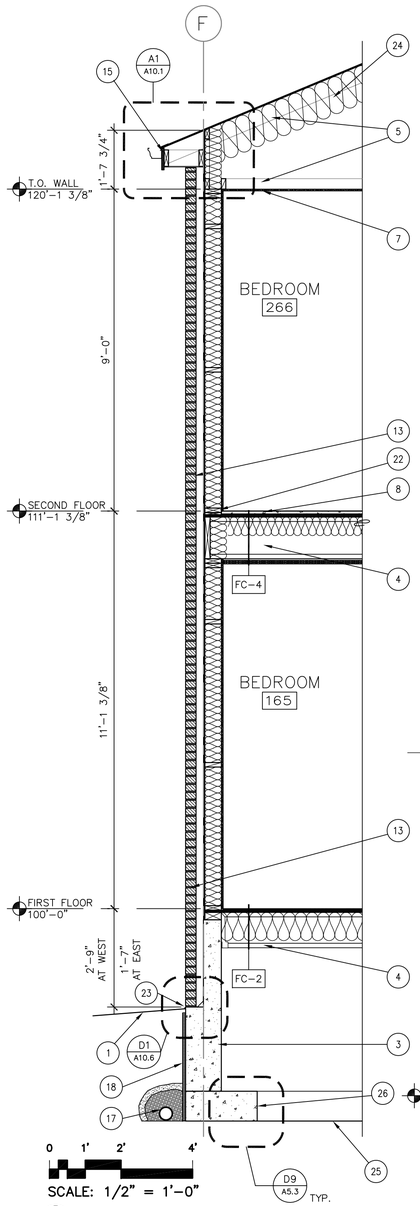

D3 WALL SECTION
1/2" = 1'-0"

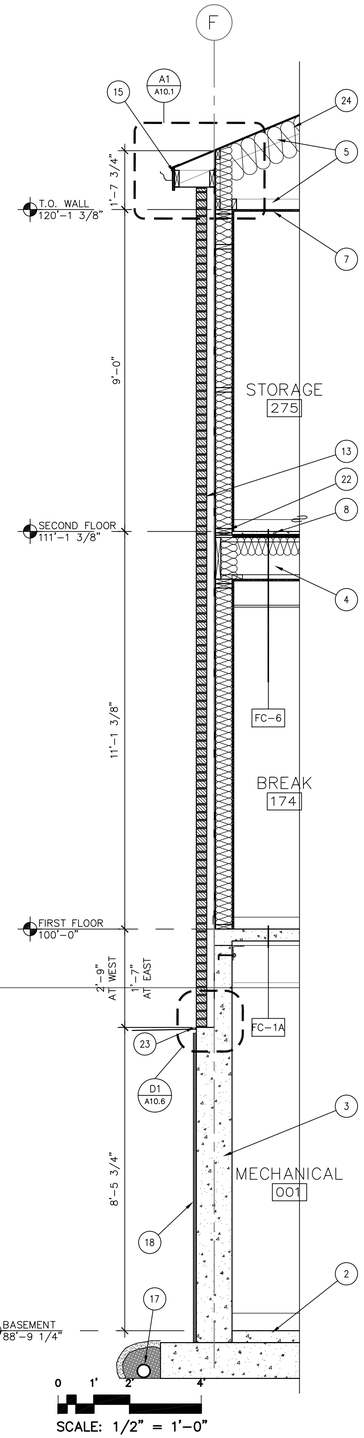

D5 WALL SECTION
1/2" = 1'-0"

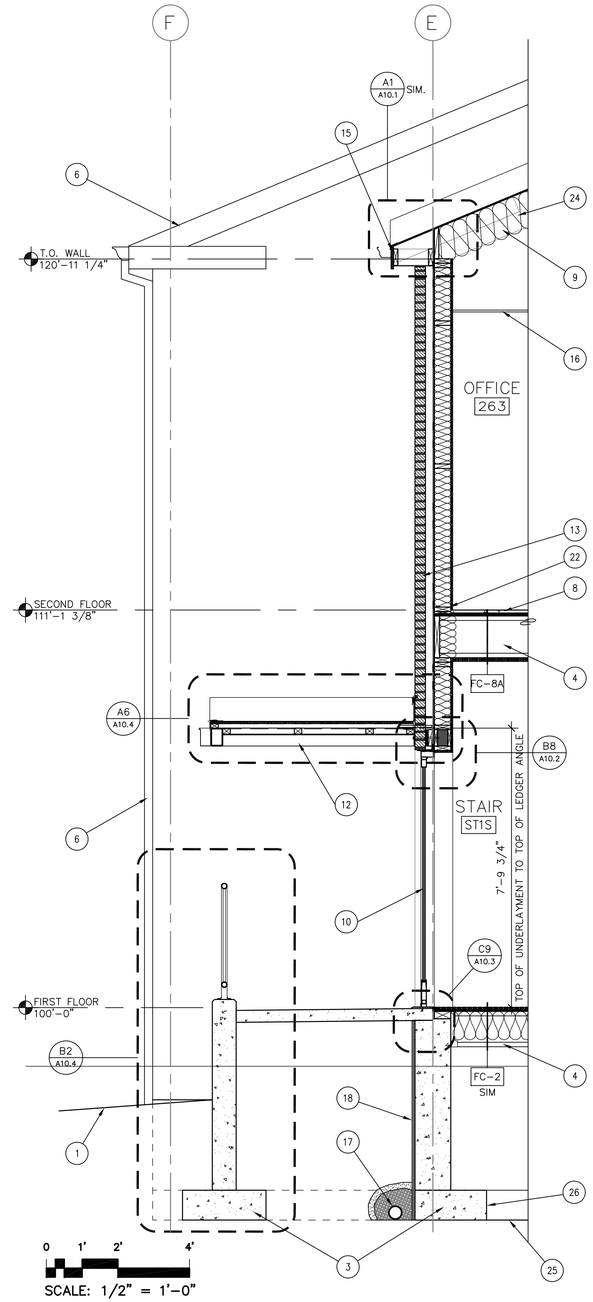

D7 WALL SECTION
1/2" = 1'-0"

GENERAL NOTES:

A. RE: A2.0 FOR BUILDING ASSEMBLIES AND RATED ASSEMBLY PENETRATION INFORMATION.

B. REFERENCE ELEVATIONS NOTED REPRESENT VERTICAL HEIGHTS RELATIVE TO INTERIOR FLOOR DATUM ASSUMED AT 1331.64' [100'-0 "], RE: CIVIL DRAWINGS.

C. RE: A9.1 THRU A9.4 FOR CEILING INFORMATION.

D. COORDINATE LIGHTING, ELECTRICAL EQUIPMENT AND FIRE ALARM EQUIPMENT WITH ELECTRICAL DRAWINGS.

E. COORDINATE PLUMBING FIXTURES WITH PLUMBING DRAWINGS.

F. RE: STRUCTURAL DRAWINGS AND SPECIFICATIONS FOR ALL BUILDING SLAB AND FOUNDATION INFORMATION.

G. RE: STRUCTURAL DRAWINGS AND SPECIFICATIONS FOR SIZES AND BEARINGS OF ALL JOISTS, BEAMS, AND TRUSSES.

SHEET NOTES:

1. FINISH GRADE VARIES, RE: CIVIL DRAWINGS.
2. CAST-IN-PLACE CONCRETE FLOOR SLAB ON VAPOR BARRIER, RE: STRUCTURAL DRAWINGS.
3. CAST-IN-PLACE CONCRETE FOUNDATION SYSTEM, RE: STRUCTURAL DRAWINGS.
4. WOOD JOIST FRAMING, RE: STRUCTURAL DRAWINGS.
5. PREFABRICATED WOOD ROOF TRUSS SYSTEM, RE: STRUCTURAL DRAWINGS.
6. ROOF LINE OR BUILDING BEYOND.
7. ROOF/CEILING ASSEMBLY.
8. FLOOR/CEILING ASSEMBLY.
9. ROOF FRAMING MEMBER, RE: STRUCTURAL.
10. ALUMINUM-FRAMED ENTRANCE SYSTEM DOOR, FRAME AND ASSOCIATED HARDWARE, RE: FLOOR PLANS AND DOOR SCHEDULE.
11. VINYL WINDOW SYSTEM.
12. EXTERIOR CANOPY.
13. BRICK VENEER WALL SYSTEM.
14. PVC TRIM.
15. PVC FASCIA.
16. ACOUSTIC PANEL CEILING SYSTEM.
17. FOUNDATION DRAINAGE SYSTEM, RE: A5.1-D9.
18. WATERPROOF MEMBRANE AND DRAINAGE BOARD.
19. ROUND/DRAIN ROCK.
20. FILTER FABRIC.
21. 4" PERFORATED DRAIN PIPE.
22. 2x PLATE OVER CONTINUOUS 1x, TYPICAL AT GYPSUM UNDERLAYMENT.
23. FLASHING AND WEEP HOLES, TYPICAL
24. R-38 SPRAYED ICYNENE INSULATION.
25. GRADE AT CRAWL SPACE W/VAPOR BARRIER
26. SEAL VAPOR BARRIER TO CONCRETE FOOTING.

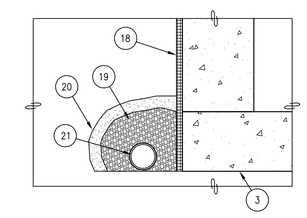

D9 FOUNDATION DRAINAGE DETAIL
1" = 1'-0"

REVISIONS	DATE

REGISTERED ARCHITECT
RAYMOND J. KISTLER
3172
ASHLAND, OREGON
STATE OF OREGON

kistler + small + white architects

KISTLER SMALL WHITE, ARCHITECTS
552 A STREET
ASHLAND, OREGON 97520
P: 541-488-8200
F: 541-552-9512
www.kistlersmallwhite.com

DEPARTMENT OF VETERANS AFFAIRS

SOUTHERN OREGON REHABILITATION CENTER & CLINICS

8495 CRATER LAKE HIGHWAY
WHITE CITY, OREGON

DRAWING TITLE:
WALL SECTIONS

FULLY SPRINKLERED FACILITY

PROJECT TITLE
REPLACE DOM BLDG. 203

DRAWN BY:	DATE: 4 AUGUST 2014	DRAWING NO.: A5.1
CHECK BY:	VA PROJECT NO.: 692-339	DWG.35 OF 56

US DEPARTMENT OF VETERANS AFFAIRS

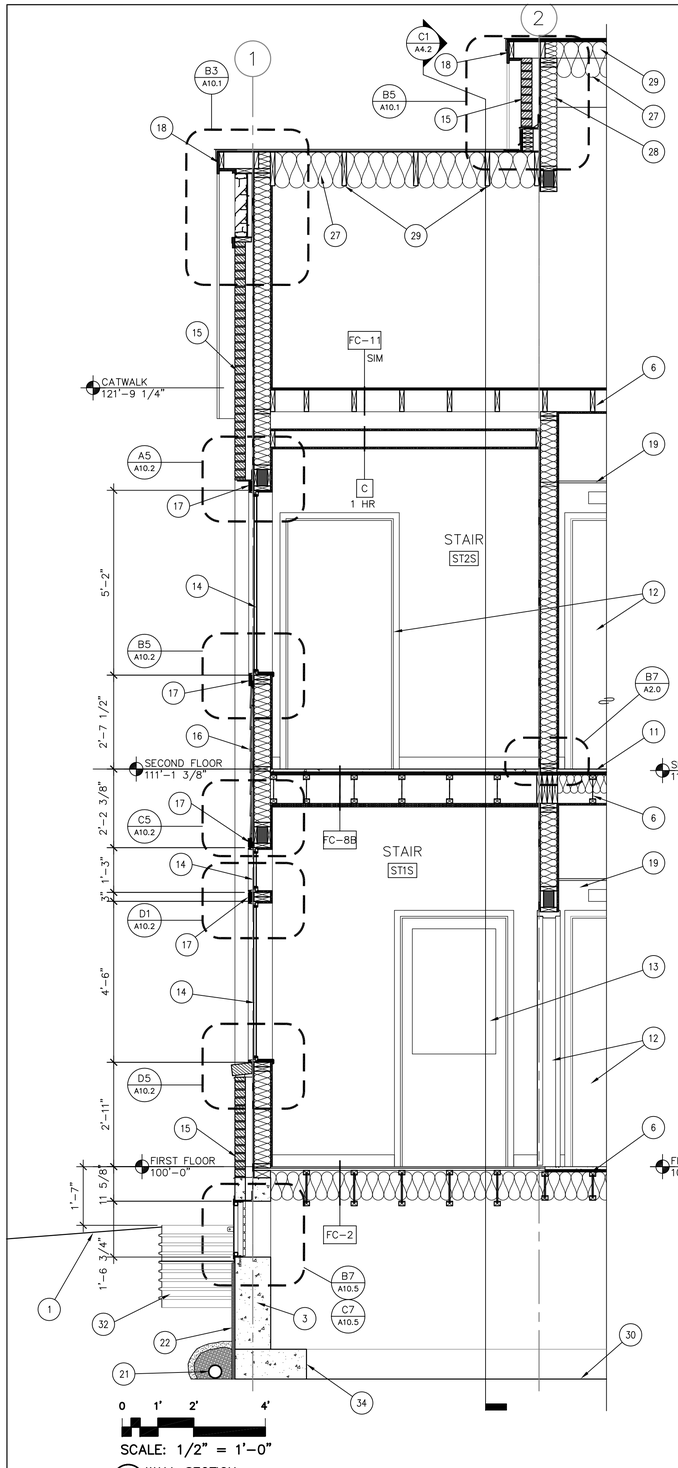

SCALE: 1/2" = 1'-0"

D1 WALL SECTION
1/2" = 1'-0"

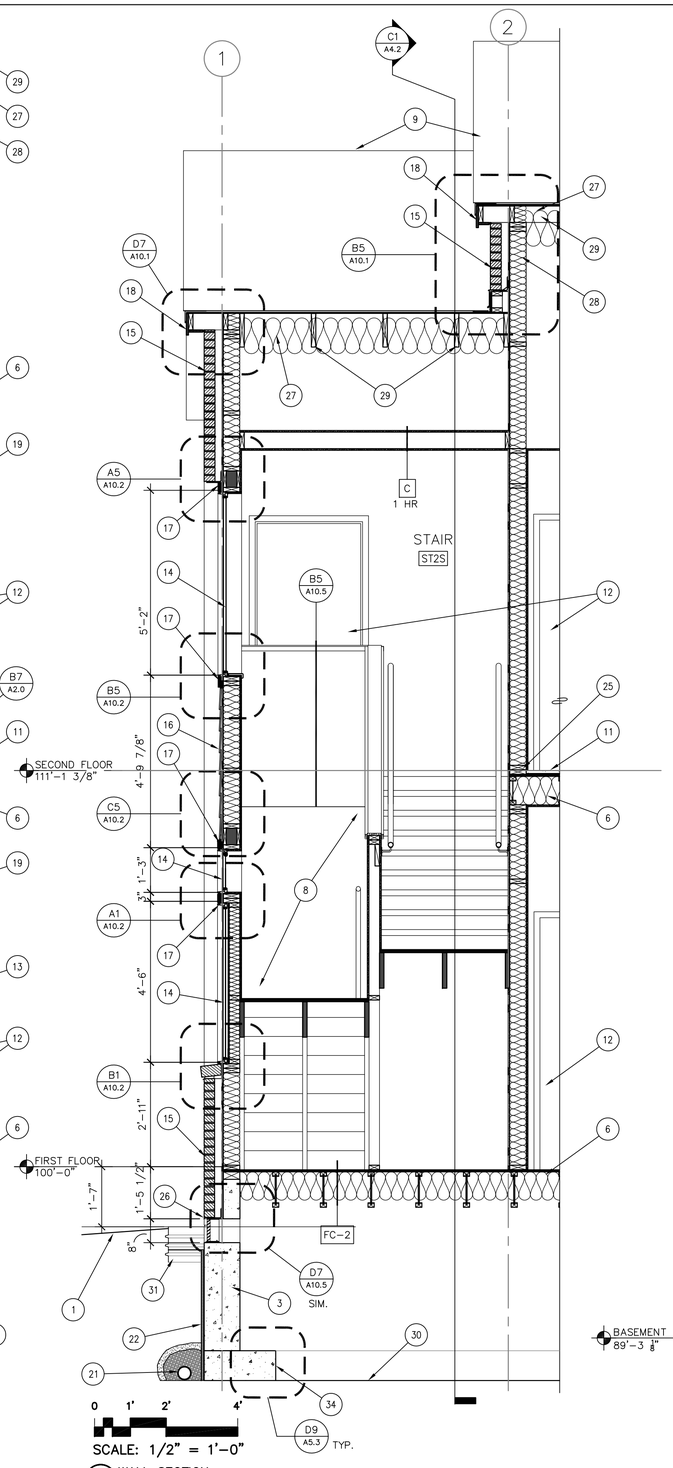

SCALE: 1/2" = 1'-0"

D4 WALL SECTION
1/2" = 1'-0"

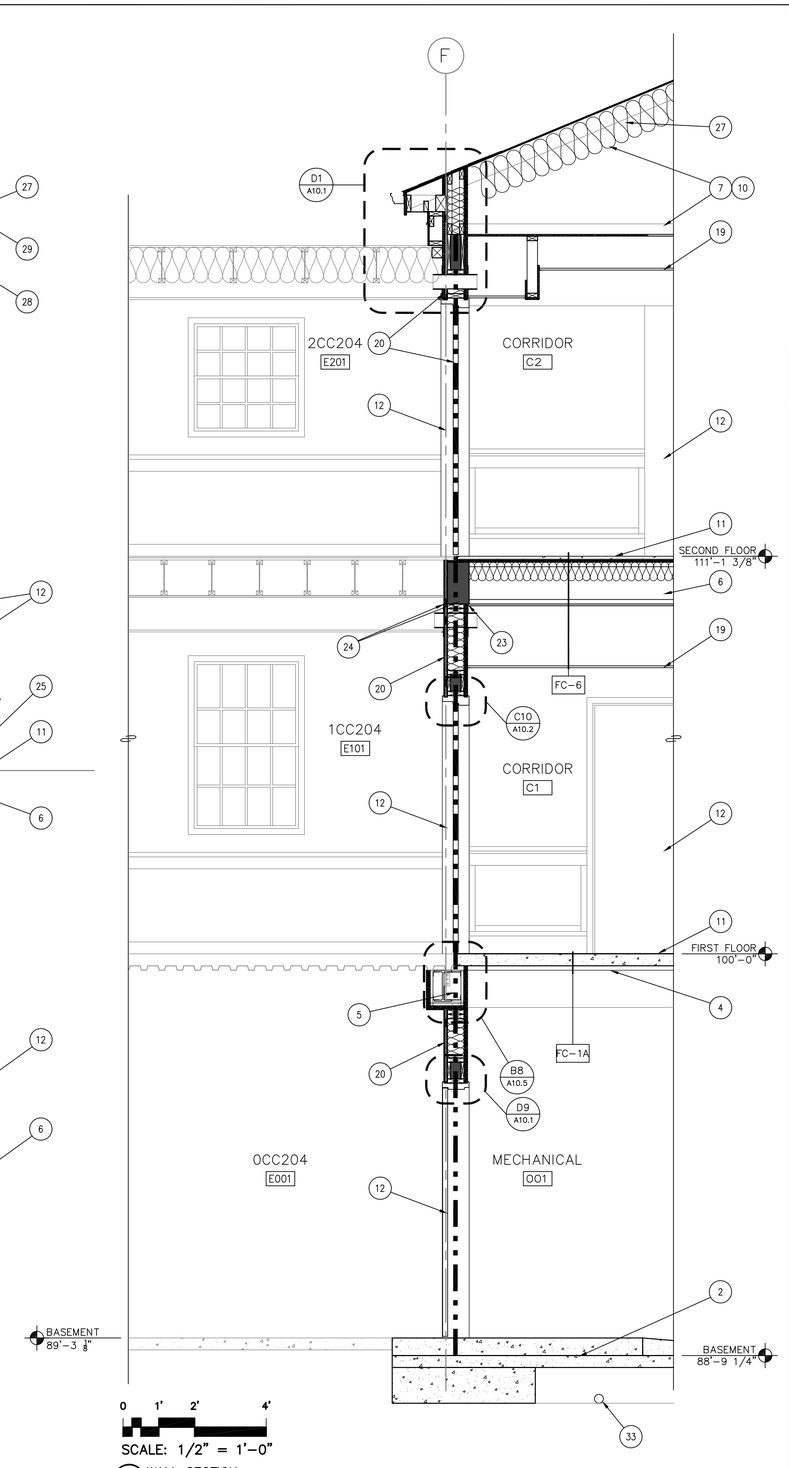

SCALE: 1/2" = 1'-0"

D7 WALL SECTION
1/2" = 1'-0"

GENERAL NOTES:

A. RE: A2.0 FOR BUILDING ASSEMBLIES AND RATED ASSEMBLY PENETRATION INFORMATION.

B. REFERENCE ELEVATIONS NOTED REPRESENT VERTICAL HEIGHTS RELATIVE TO INTERIOR FLOOR DATUM ASSUMED AT 1331.64' [100'-0], RE: CIVIL DRAWINGS.

C. RE: A9.1 THRU A9.4 FOR CEILING INFORMATION.

D. COORDINATE LIGHTING, ELECTRICAL EQUIPMENT AND FIRE ALARM EQUIPMENT WITH ELECTRICAL DRAWINGS.

E. COORDINATE PLUMBING FIXTURES WITH PLUMBING DRAWINGS.

F. RE: STRUCTURAL DRAWINGS AND SPECIFICATIONS FOR ALL BUILDING SLAB AND FOUNDATION INFORMATION.

G. RE: STRUCTURAL DRAWINGS AND SPECIFICATIONS FOR SIZES AND BEARINGS OF ALL JOISTS, BEAMS, AND TRUSSES.

SHEET NOTES:

1. FINISH GRADE VARIES, RE: CIVIL DRAWINGS.
2. CAST-IN-PLACE CONCRETE FLOOR SLAB ON VAPOR BARRIER, RE: STRUCTURAL DRAWINGS.
3. CAST-IN-PLACE CONCRETE FOUNDATION SYSTEM, RE: STRUCTURAL DRAWINGS.
4. COMPOSITE CONCRETE FLOOR SYSTEM, RE: STRUCTURAL DRAWINGS.
5. STRUCTURAL STEEL FRAMING, RE: STRUCTURAL DRAWINGS.
6. WOOD JOIST FRAMING, RE: STRUCTURAL DRAWINGS.
7. PREFABRICATED WOOD ROOF TRUSS SYSTEM, RE: STRUCTURAL DRAWINGS.
8. OPEN TO BEYOND.
9. ROOF LINE OR BUILDING BEYOND.
10. ROOF/CEILING ASSEMBLY.
11. FLOOR/CEILING ASSEMBLY.
12. DOOR, RE: FLOOR PLANS AND DOOR SCHEDULE.
13. ALUMINUM-FRAMED ENTRANCE SYSTEM DOOR, FRAME AND ASSOCIATED HARDWARE, RE: FLOOR PLANS AND DOOR SCHEDULE.
14. VINYL WINDOW SYSTEM.
15. BRICK VENEER WALL SYSTEM.
16. FIBER CEMENT SIDING.
17. PVC TRIM.
18. PVC FASCIA.
19. ACOUSTIC PANEL CEILING SYSTEM.
20. 2 HOUR FIRE BARRIER WALL.
21. FOUNDATION DRAINAGE SYSTEM, RE: A5.1-D9.
22. WATERPROOFING MEMBRANE AND DRAINAGE BOARD.
23. TERMINATE GYPSUM BOARD AT UNDERSIDE OF HEADER.
24. EXTEND BOTH LAYERS OF GYPSUM BOARD TO UNDERSIDE OF FLOOR SHEATHING. RE: STRUCTURAL FOR HEADER.
25. 2x PLATE OVER CONTINUOUS 1x, TYPICAL AT GYPSUM UNDERLAYMENT.
26. FLASHING AND WEEP HOLES, TYPICAL
27. R-38 SPRAYED ICYNENE INSULATION.
28. R-21 SPRAYED ICYNENE INSULATION.
29. ROOF FRAMING MEMBER, RE: STRUCTURAL.
30. GRADE AT CRAWL SPACE W/VAPOR BARRIER
31. FOUNDATION VENT WELL.
32. CRAWL ACCESS AREA WELL.
33. UNDERSLAB DRAIN, RE: STRUCTURAL DRAWINGS.
34. SEAL VAPOR BARRIER TO CONCRETE FOOTING.

REVISIONS	DATE

REGISTERED ARCHITECT
RAYMOND J. KISTLER
3172
ASHLAND, OREGON
STATE OF OREGON

kistler + small + white architects

KISTLER SMALL WHITE, ARCHITECTS
552 A STREET
ASHLAND, OREGON 97520
P: 541-488-5200
F: 541-552-9512
www.kistlersmallwhite.com

DEPARTMENT OF VETERANS AFFAIRS

SOUTHERN OREGON REHABILITATION CENTER & CLINICS

8495 CRATER LAKE HIGHWAY
WHITE CITY, OREGON

DRAWING TITLE:
WALL SECTIONS

FULLY SPRINKLERED FACILITY

PROJECT TITLE
REPLACE DOM BLDG. 203

DRAWN BY:	DATE: 4 AUGUST 2014	DRAWING NO.: A5.2
CHECK BY:	VA PROJECT NO.: 692-339	DWG.36 OF 56

US DEPARTMENT OF VETERANS AFFAIRS

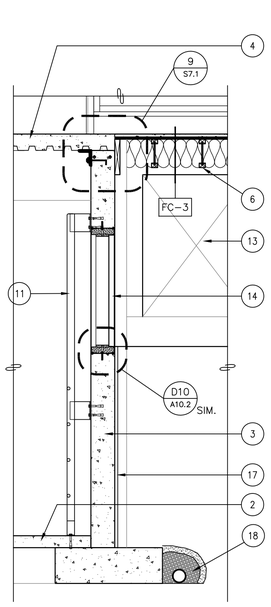

D1 PARTIAL WALL SECTION
1/2" = 1'-0"

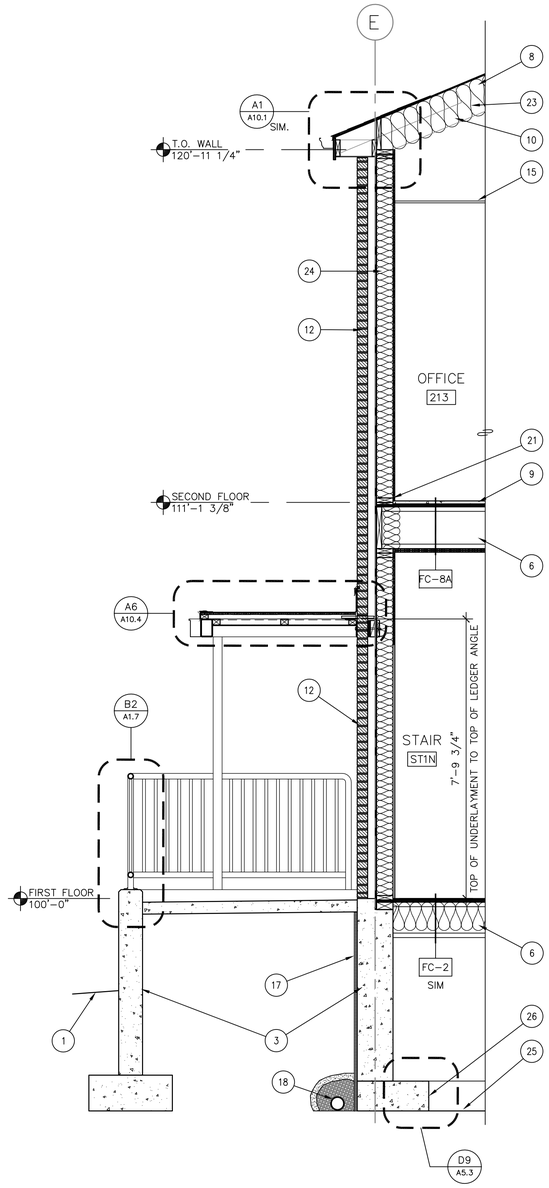

D3 WALL SECTION
1/2" = 1'-0"

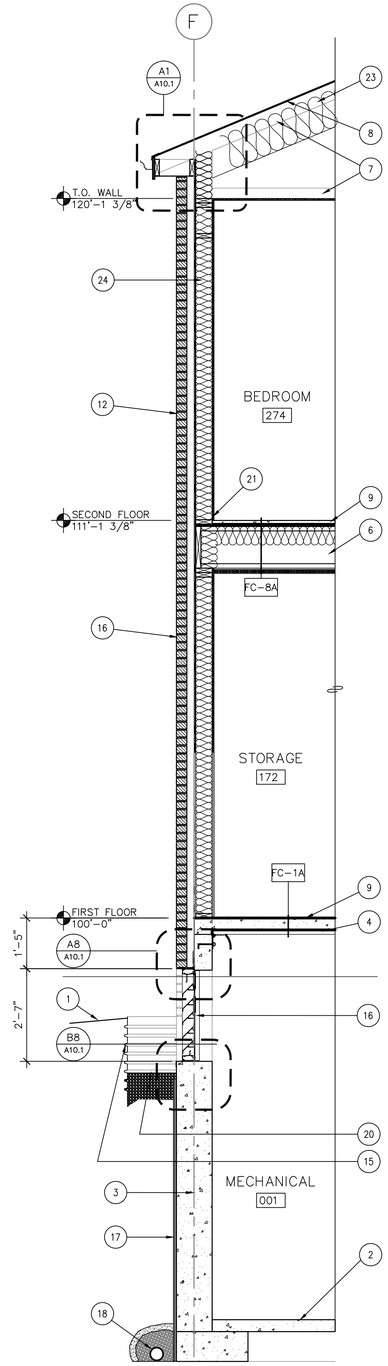

D5 WALL SECTION
1/2" = 1'-0"

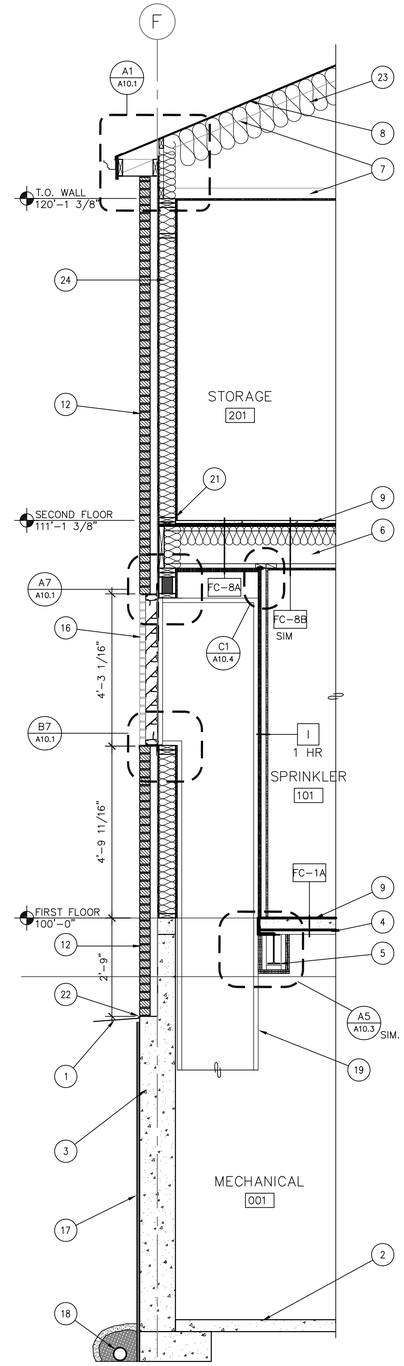

D7 WALL SECTION
1/2" = 1'-0"

GENERAL NOTES:

A. RE: A2.0 FOR BUILDING ASSEMBLIES AND RATED ASSEMBLY PENETRATION INFORMATION.

B. REFERENCE ELEVATIONS NOTED REPRESENT VERTICAL HEIGHTS RELATIVE TO INTERIOR FLOOR DATUM ASSUMED AT 1331.64' [100'-0"], RE: CIVIL DRAWINGS.

C. RE: A9.1 THRU A9.4 FOR CEILING INFORMATION.

D. COORDINATE LIGHTING, ELECTRICAL EQUIPMENT AND FIRE ALARM EQUIPMENT WITH ELECTRICAL DRAWINGS.

E. COORDINATE PLUMBING FIXTURES WITH PLUMBING DRAWINGS.

F. RE: STRUCTURAL DRAWINGS AND SPECIFICATIONS FOR ALL BUILDING SLAB AND FOUNDATION INFORMATION.

G. RE: STRUCTURAL DRAWINGS AND SPECIFICATIONS FOR SIZES AND BEARINGS OF ALL JOISTS, BEAMS, AND TRUSSES.

SHEET NOTES:

1. FINISH GRADE VARIES, RE: CIVIL DRAWINGS.
2. CAST-IN-PLACE CONCRETE FLOOR SLAB ON VAPOR BARRIER, RE: STRUCTURAL DRAWINGS.
3. CAST-IN-PLACE CONCRETE FOUNDATION SYSTEM, RE: STRUCTURAL DRAWINGS.
4. COMPOSITE CONCRETE FLOOR SYSTEM, RE: STRUCTURAL DRAWINGS.
5. STRUCTURAL STEEL FRAMING, RE: STRUCTURAL DRAWINGS.
6. WOOD JOIST FRAMING, RE: STRUCTURAL DRAWINGS.
7. PREFABRICATED WOOD ROOF TRUSS SYSTEM, RE: STRUCTURAL DRAWINGS.
8. ROOF/CEILING ASSEMBLY.
9. FLOOR/CEILING ASSEMBLY.
10. ROOF FRAMING MEMBER, RE: STRUCTURAL..
11. CRAWL SPACE ACCESS LADDER, RE: D4/A10.4
12. BRICK VENEER WALL SYSTEM.
13. CRAWL SPACE ACCESS OPENING.
14. CRAWL SPACE ACCESS DOOR, RE: DOOR SCHEDULE.
15. NORWESCO AREA WELL MODEL BS7920.
16. HVAC LOUVER, DUCTWORK, RE: MECHANICAL DRAWINGS.
17. WATERPROOFING MEMBRANE AND DRAINAGE BOARD.
18. FOUNDATION DRAINAGE SYSTEM, RE: A5.1-D9.
19. HVAC EQUIPMENT OR DUCTWORK, RE: MECHANICAL DRAWINGS.
20. 1½" ø DRAIN ROCK
21. 2x PLATE OVER CONTINUOUS 1x. TYPICAL AT GYPSUM UNDERLAYMENT.
22. FLASHING AND WEEP HOLES, TYPICAL.
23. R-38 SPRAYED ICYNENE INSULATION.
24. R-21 SPRAYED ICYNENE INSULATION.
25. GRADE AT CRAWL SPACE W/VAPOR BARRIER
26. SEAL VAPOR BARRIER TO FOOTING.
27. CONCRETE FOOTING

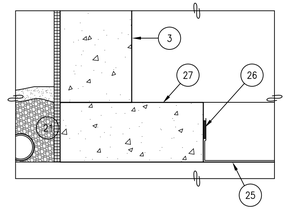

0 1' 2' 4'
SCALE: 1/2" = 1'-0"

0 6" 1' 2'
SCALE: 1" = 1'-0"

D9 VAPOR BARRIER SEAL AT PERIMETER
1" = 1'-0"

REVISIONS	DATE

REGISTERED ARCHITECT
RAYMOND J. KISTLER
3172
ASHLAND, OREGON
STATE OF OREGON

kistler + small + white architects

KISTLER SMALL WHITE, ARCHITECTS
552 A STREET
ASHLAND, OREGON 97520
P: 541-488-8200
F: 541-552-8512
www.kistlersmallwhite.com

DEPARTMENT OF VETERANS AFFAIRS

SOUTHERN OREGON REHABILITATION CENTER & CLINICS

8495 CRATER LAKE HIGHWAY
WHITE CITY, OREGON

DRAWING TITLE:
WALL SECTIONS

FULLY SPRINKLERED FACILITY

PROJECT TITLE
REPLACE DOM BLDG. 203

DRAWN BY:
DATE: 4 AUGUST 2014
DRAWING NO.: A5.3
CHECK BY:
VA PROJECT NO.: 692-339
DWG.37 OF 56

US DEPARTMENT OF VETERANS AFFAIRS

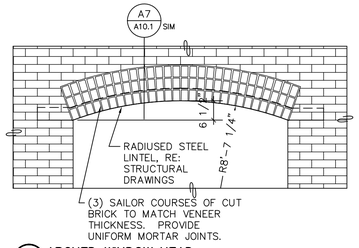

A1 ARCHED WINDOW HEAD
1/2" = 1'-0"

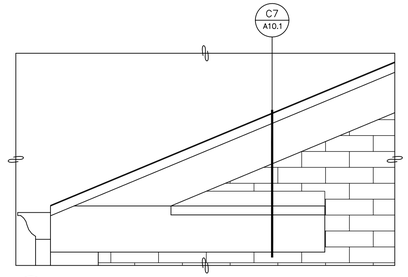

A2 DETAIL
1" = 1'-0"

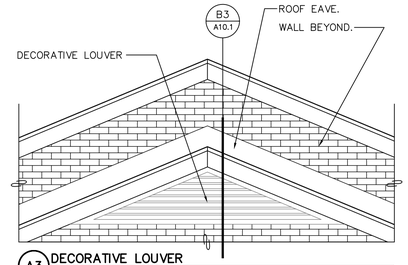

A3 DECORATIVE LOUVER
1/2" = 1'-0"

ELEVATION KEY PLAN:

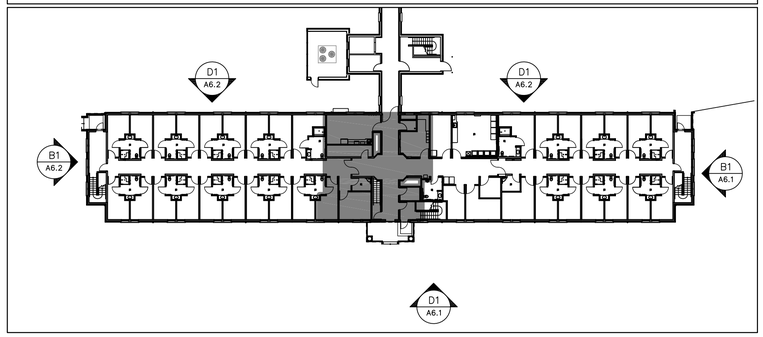

GENERAL NOTES:

A. REFERENCE ELEVATIONS NOTED REPRESENT VERTICAL HEIGHTS RELATIVE TO INTERIOR FLOOR DATUM ASSUMED AT 1331.64' [100'-0 "], RE: CIVIL DRAWINGS.

B. COORDINATE EXTERIOR LIGHTING, ELECTRICAL EQUIPMENT AND FIRE ALARM EQUIPMENT WITH ELECTRICAL DRAWINGS.

SHEET NOTES:

1. ASPHALT COMPOSITE SHINGLE ROOFING SYSTEM.
2. BRICK VENEER.
3. FIBER CEMENT SIDING.
4. ROOF ANCHORS, RE: ROOF PLAN AND STRUCTURAL.
5. ALUMINUM-FRAMED ENTRANCE SYSTEM DOOR, FRAME AND ASSOCIATED HARDWARE, RE: FLOOR PLANS AND DOOR SCHEDULE.
6. VINYL WINDOW SYSTEM.
7. HOLLOW METAL DOOR SYSTEM, RE: DOOR SCHEDULE.
8. EXPANSION JOINT. REFER TO STRUCTURAL DWGS FOR ADDITIONAL INFORMATION.
9. PREFINISHED METAL GUTTER AND DOWNSPOUTS.
10. EXTERIOR STEEL CANOPY, PAINTED. RE: A10.4-A6.
11. PRE-FINISHED FASCIA.
12. PLUMBING FIXTURE OR EQUIPMENT, RE: PLUMBING DRAWINGS.
13. HVAC EQUIPMENT OR DUCTWORK, RE: MECHANICAL DRAWINGS.
14. NOT USED.
15. CONCRETE FOUNDATION WALL SYSTEM, RE: STRUCTURAL DRAWINGS.
16. FINISH GRADE VARIES, RE: CIVIL DRAWINGS.
17. START OF BRICK IS 1'-7 3/16" BELOW F.F. THIS ELEVATION.
18. NOT USED.
19. NOT USED.
20. 8½" X 3½" X OPENING + 8", PRECAST CONCRETE LINTEL.
21. AREA WELL WITH GRATE COVER.
22. FOUNDATION VENTS W/ BOTTOM OF VENT AT 2'-0 1/2" BELOW FINISH FLOOR, PROVIDE VENT WELLS. RE: A10.5-D7.
23. CRAWL SPACE DOOR W/ BOTTOM AT 2'-6 5/16" BELOW FINISH FLOOR. RE: A10.5-B7.
24. NOT USED.
25. EXISTING BUILDING 204 CROSS CORRIDOR.
26. NOT USED.
27. NOT USED.
28. EXISTING FOOTING FROM BUILDING 204.
29. PAINTED STEEL GUARD AND HANDRAIL SYSTEM.
30. RETAIN AND PROTECT EXISTING CONSTRUCTION.

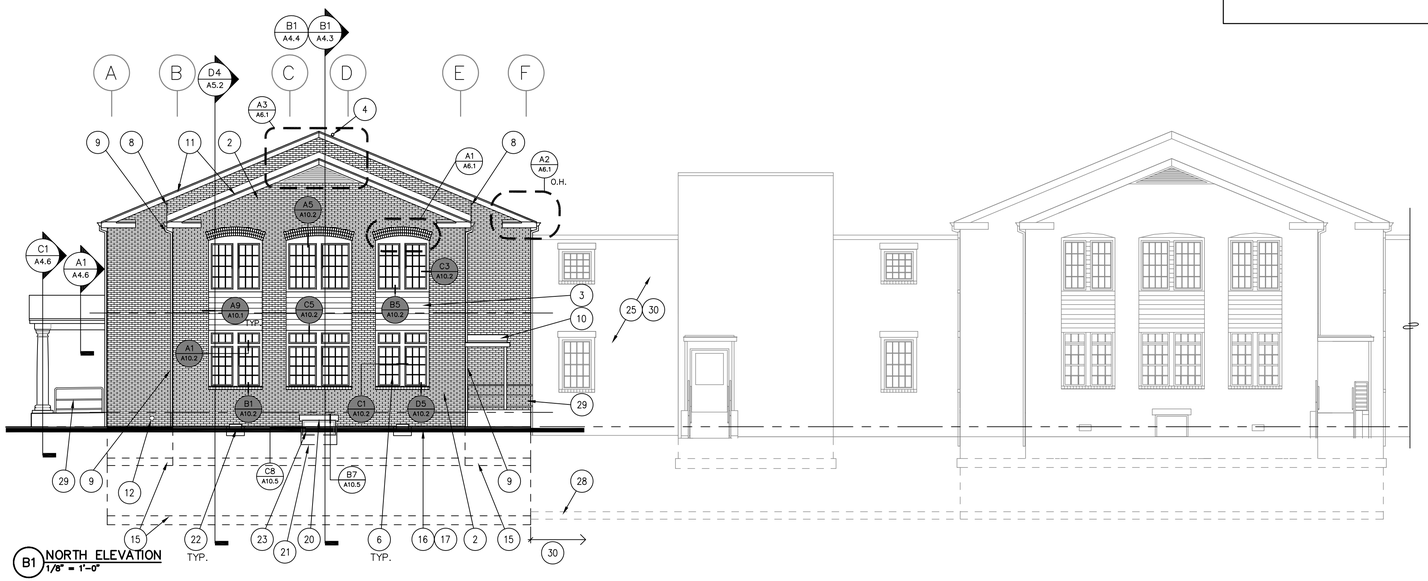

B1 NORTH ELEVATION
1/8" = 1'-0"

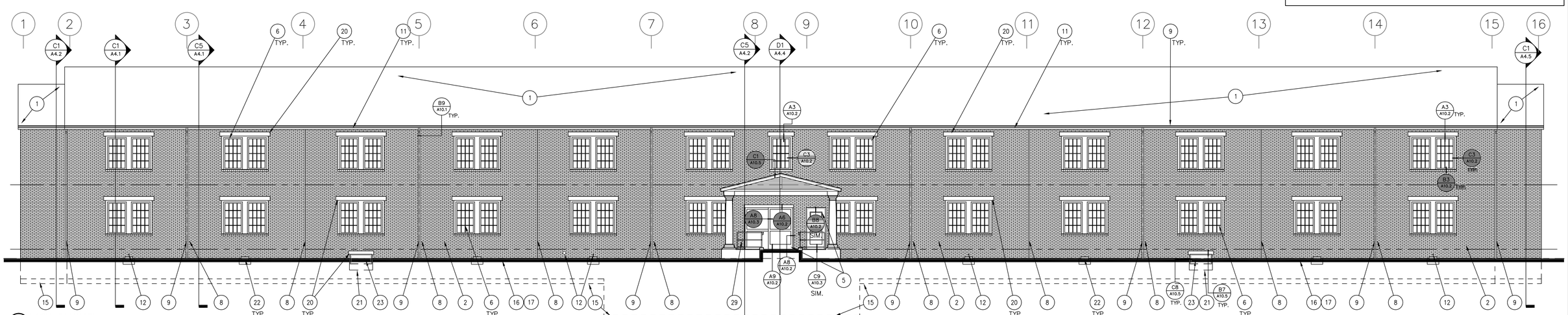

D1 EAST ELEVATION
1/8" = 1'-0"

REVISIONS	DATE

REGISTERED ARCHITECT
RAYMOND J. KISTLER
3172
ASHLAND, OREGON
STATE OF OREGON

kistler + small + white architects

KISTLER SMALL WHITE, ARCHITECTS
552 A STREET
ASHLAND, OREGON 97520
P: 541-488-8200
F: 541-552-9512
www.kistlersmallwhite.com

DEPARTMENT OF VETERANS AFFAIRS

SOUTHERN OREGON REHABILITATION CENTER & CLINICS

8495 CRATER LAKE HIGHWAY
WHITE CITY, OREGON

DRAWING TITLE:

EXTERIOR ELEVATIONS

FULLY SPRINKLERED FACILITY

PROJECT TITLE
REPLACE DOM BLDG. 203

DRAWN BY:	DATE: 4 AUGUST 2014	DRAWING NO.: A6.1
CHECK BY:	VA PROJECT NO.: 692-339	DWG.38OF 56

US DEPARTMENT OF VETERANS AFFAIRS

ELEVATION KEY PLAN:

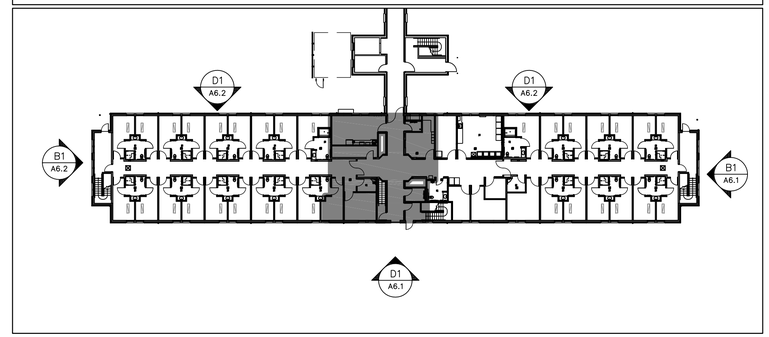

GENERAL NOTES:

A. REFERENCE ELEVATIONS NOTED REPRESENT VERTICAL HEIGHTS RELATIVE TO INTERIOR FLOOR DATUM ASSUMED AT 1331.64' [100'–0 "], RE: CIVIL DRAWINGS.

B. COORDINATE EXTERIOR LIGHTING, ELECTRICAL EQUIPMENT AND FIRE ALARM EQUIPMENT WITH ELECTRICAL DRAWINGS.

SHEET NOTES:

1. ASPHALT COMPOSITE SHINGLE ROOFING SYSTEM.
2. BRICK VENEER.
3. FIBER CEMENT SIDING.
4. CHILLER ENCLOSURE. RE: A10.6.
5. ALUMINUM–FRAMED ENTRANCE SYSTEM DOOR, FRAME AND ASSOCIATED HARDWARE, RE: FLOOR PLANS AND DOOR SCHEDULE.
6. VINYL WINDOW SYSTEM.
7. PREFINISHED METAL GUTTERS AND DOWNSPOUTS.
8. EXPANSION JOINT. REFER TO STRUCTURAL DWGS FOR ADDITIONAL INFORMATION.
9. MECHANICAL LOUVER L–1, RE: M3.1 & SPECIFICATIONS.
10. EXTERIOR STEEL CANOPY, PAINTED. RE: 10.4–A6.
11. PRE–FINISHED PVC FASCIA.
12. PLUMBING FIXTURE OR EQUIPMENT, RE: PLUMBING DRAWINGS.
13. START OF BRICK IS 2'–6⅜" BELOW F.F. THIS ELEVATION.
14. START OF BRICK IS 2'–9" BELOW F.F. THIS ELEVATION.
15. CONCRETE FOUNDATION WALL SYSTEM, RE: STRUCTURAL DRAWINGS.
16. FINISH GRADE VARIES, RE: CIVIL DRAWINGS.
17. MECHANICAL LOUVER L–2, RE: M3.1 & SPECIFICATIONS.
18. ROOF ANCHORS, RE: ROOF PLAN AND STRUCTURAL.
19. AREA WELL W/ GRATE COVER.
20. 8½" X 3½" X OPENING + 8", PRECAST CONCRETE LINTEL.
21. FOUNDATION VENTS (SOUTH ELEVATION) W/ BOTTOM OF VENT AT 2'–0 1/2" BELOW FINISH FLOOR, PROVIDE VENT WELLS. RE: A10.5–D7.
22. FOUNDATION VENTS (WEST ELEVATION) W/ BOTTOM OF VENT AT 2'–3 5/32" BELOW FINISH FLOOR, RE: A10.5–D7.
23. CRAWL SPACE DOOR W/ BOTTOM AT 2'–9" BELOW FINISH FLOOR. RE: A10.5–B7.
24. CRAWL SPACE DOOR W/ BOTTOM AT 2'–6 5/16" BELOW FINISH FLOOR. RE: A10.5–B7.
25. EXISTING BUILDING 204 CROSS CORRIDOR.
26. NOT USED.
27. AREA WELL AT FOUNDATION WALL LOUVER L–2.
28. EXISTING FOOTING FROM BUILDING 204.
29. PAINTED STEEL GUARD AND HANDRAIL SYSTEM.
30. RETAIN AND PROTECT EXISTING CONSTRUCTION.

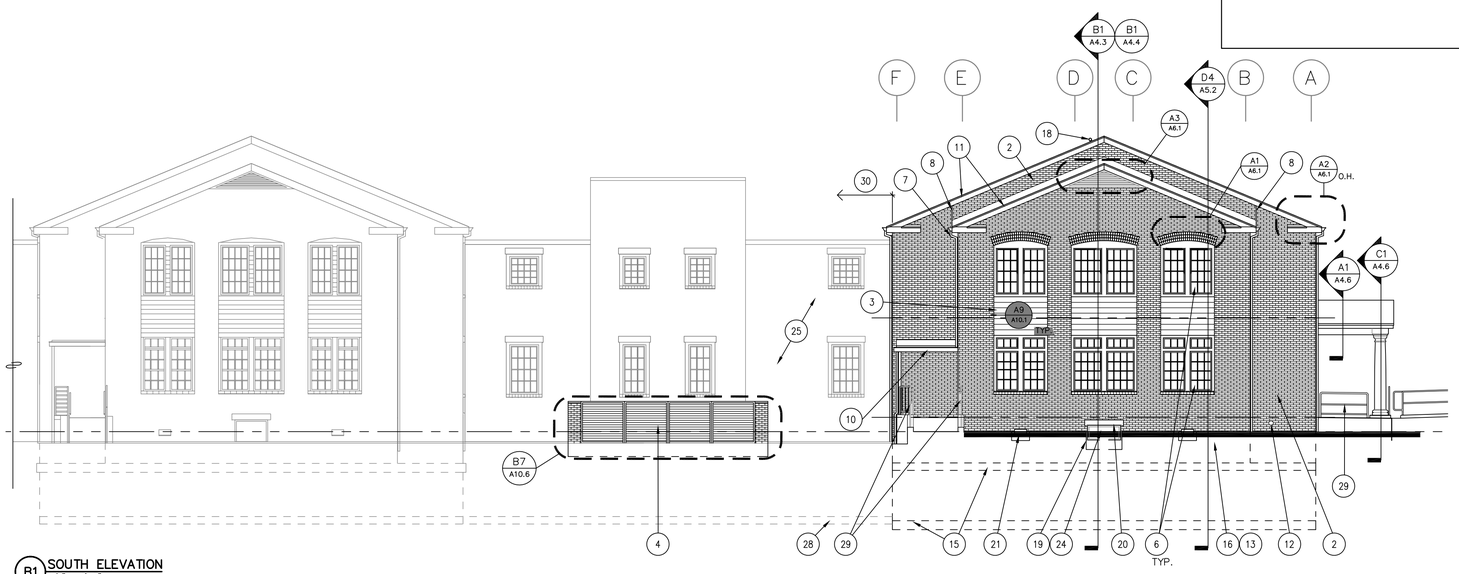

B1 SOUTH ELEVATION
1/8" = 1'–0"

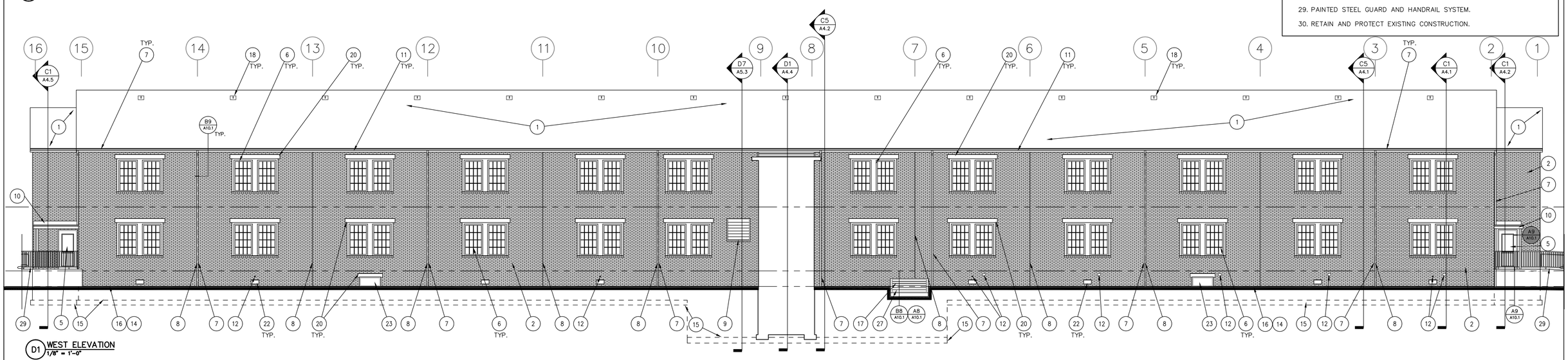

D1 WEST ELEVATION
1/8" = 1'–0"

REVISIONS	DATE

REGISTERED ARCHITECT
RAYMOND J. KISTLER
3172
ASHLAND, OREGON
STATE OF OREGON

kistler + small + white architects

KISTLER SMALL WHITE, ARCHITECTS
552 A STREET
ASHLAND, OREGON 97520
P: 541-488-8200
F: 541-552-8512
www.kistlersmallwhite.com

DEPARTMENT OF VETERANS AFFAIRS

SOUTHERN OREGON REHABILITATION CENTER & CLINICS

8495 CRATER LAKE HIGHWAY
WHITE CITY, OREGON

DRAWING TITLE:

EXTERIOR ELEVATIONS

FULLY SPRINKLERED FACILITY

PROJECT TITLE
REPLACE DOM BLDG. 203

DRAWN BY:	DATE: 4 AUGUST 2014	DRAWING NO.: A6.2
CHECK BY:	VA PROJECT NO.: 692-339	DWG.39OF 56

US DEPARTMENT OF VETERANS AFFAIRS

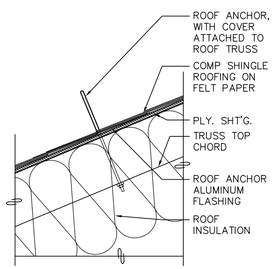

A1 ROOF ANCHOR
1 1/2" = 1'-0"

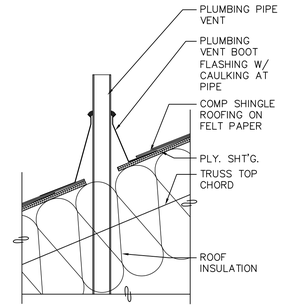

A2 PLUMBING VENT PENETRATION
1 1/2" = 1'-0"

GENERAL NOTES:

A. RE: A2.0 FOR BUILDING ASSEMBLIES.

B. REFER TO STRUCTURAL DRAWINGS FOR BEARING ELEVATIONS.

C. COORDINATE ALL ROOF PENETRATION LOCATIONS AND REQUIREMENTS WITH MECHANICAL, PLUMBING AND ELECTRICAL DRAWINGS. PROVIDE FLASHING AND COUNTER FLASHING PER DRAWINGS AND MANUFACTURERS' REQUIREMENTS.

SHEET NOTES:

1. ROOF ANCHOR.
2. EXISTING BUILDING 204. RETAIN AND PROTECT EXISTING CONSTRUCTION.
3. ASPHALT COMPOSITE SHINGLE ROOFING SYSTEM.
4. EXTERIOR PORCH.
5. EXTERIOR CANOPY AND GUTTER BELOW, RE: A10.4–A6.
6. PLUMBING VENT, RE: MECHANICAL DRAWINGS.
7. 3"X4" DOWNSPOUT, TYPICAL. RE: A10.1–B9.
8. GUTTER WITH 3" X 4" DOWNSPOUT TO ROOF/CANOPY BELOW.
9. HATCHED AREA INDICATES EXISTIING ROOF AREA THAT MAY NEED PATCHING AND REPAIR. REPLACE FASCIA, AND EAVE SYSTEMS AS REQUIRED FOR CONNECTION TO NEW BUILDING.

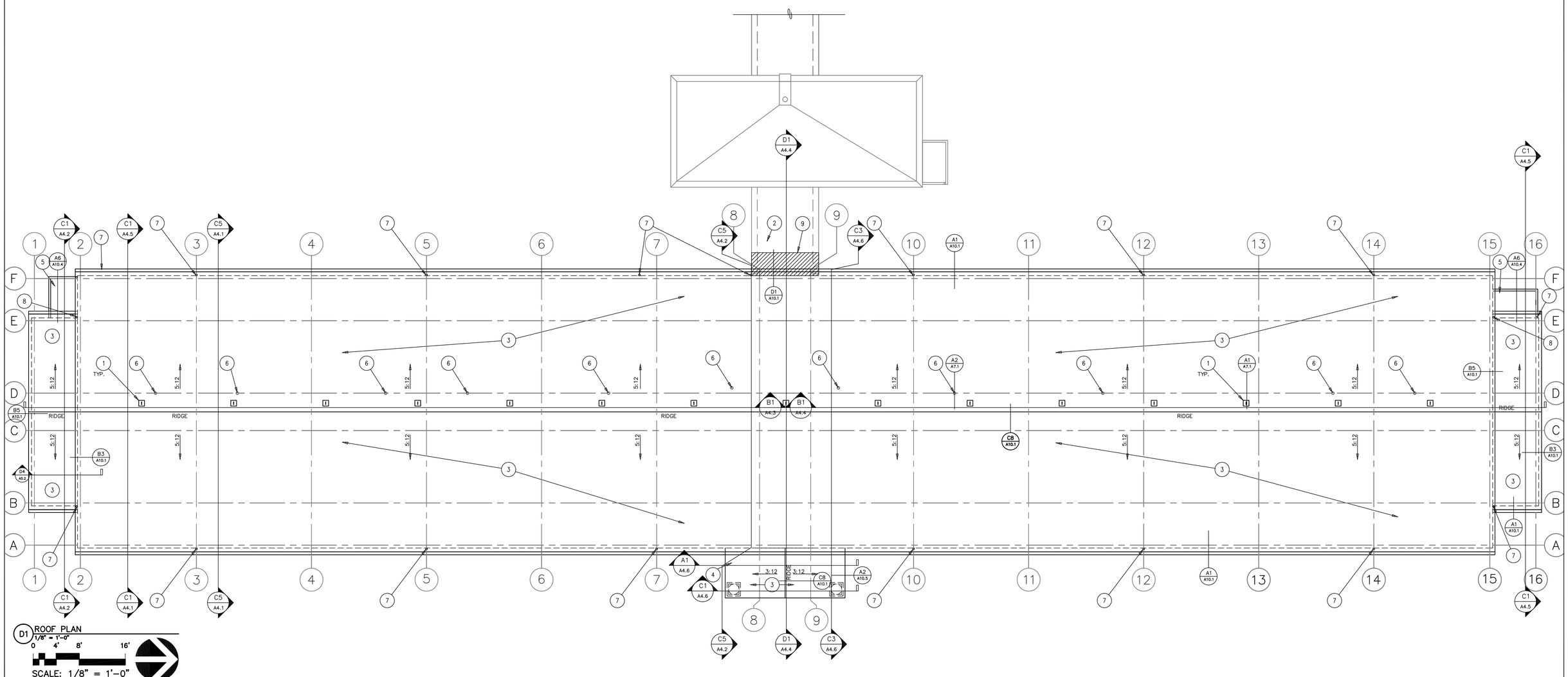

D1 ROOF PLAN
1/8" = 1'-0"
0 4' 8' 16'
SCALE: 1/8" = 1'-0"

REVISIONS	DATE

REGISTERED ARCHITECT
RAYMOND J. KISTLER
3172
ASHLAND, OREGON
STATE OF OREGON

kistler + small + white architects

KISTLER SMALL WHITE, ARCHITECTS
552 A STREET
ASHLAND, OREGON 97520
P: 541-488-8200
F: 541-552-9512
www.kistlersmallwhite.com

DEPARTMENT OF VETERANS AFFAIRS

SOUTHERN OREGON REHABILITATION CENTER & CLINICS

8495 CRATER LAKE HIGHWAY
WHITE CITY, OREGON

DRAWING TITLE:
ROOF PLAN

FULLY SPRINKLERED FACILITY

PROJECT TITLE
REPLACE DOM BLDG. 203

DRAWN BY:	DATE:	DRAWING NO.:
TM	4 AUGUST 2014	A7.1
CHECK BY: TI	VA PROJECT NO.: 692-339	DWG.40 OF 56

US DEPARTMENT OF VETERANS AFFAIRS

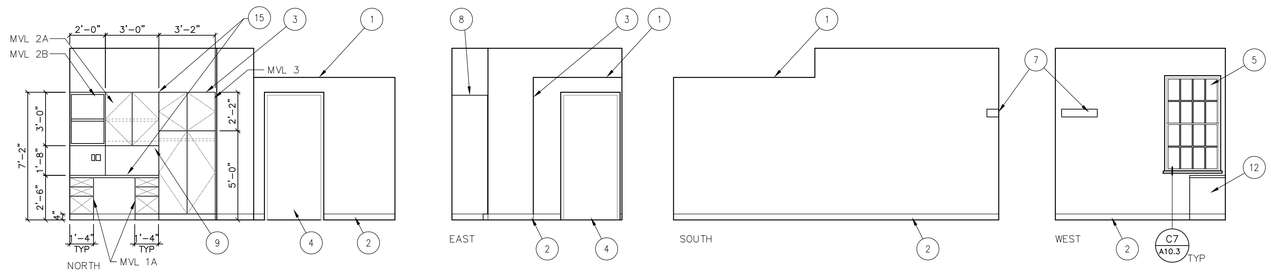

A1 BEDROOM (SEMI-PRIVATE)
1/4" = 1'-0"

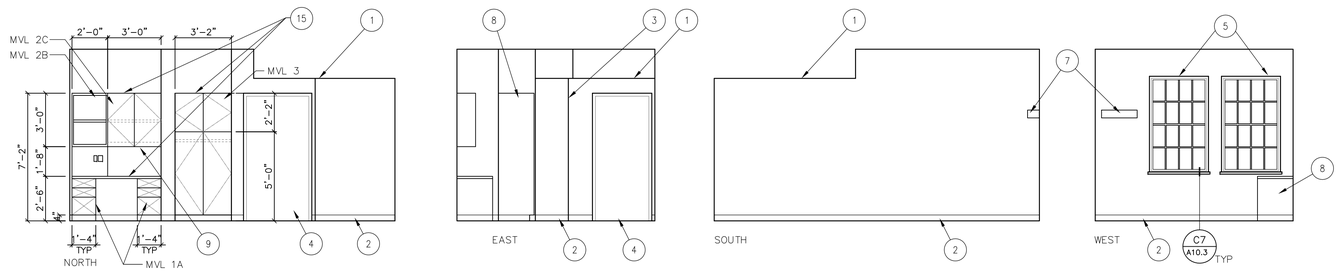

B1 BEDROOM (SINGLE)
1/4" = 1'-0"

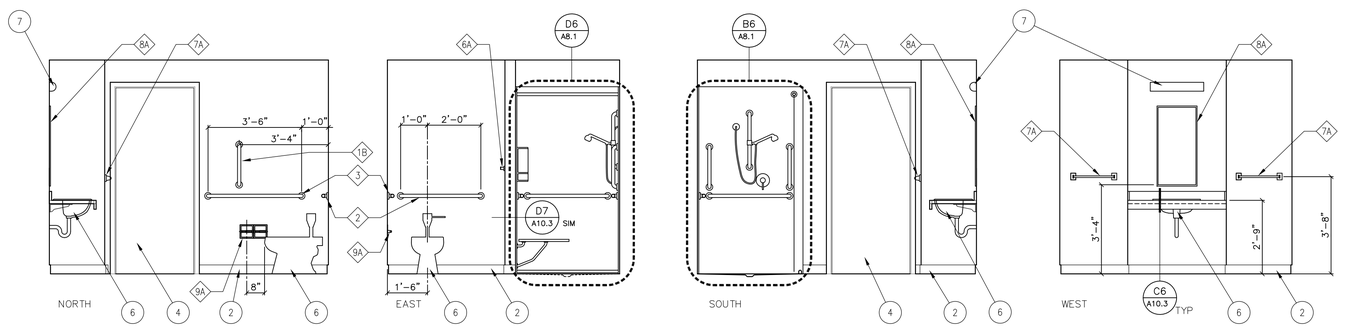

C1 BATHROOM (SEMI-PRIVATE)
3/8" = 1'-0"

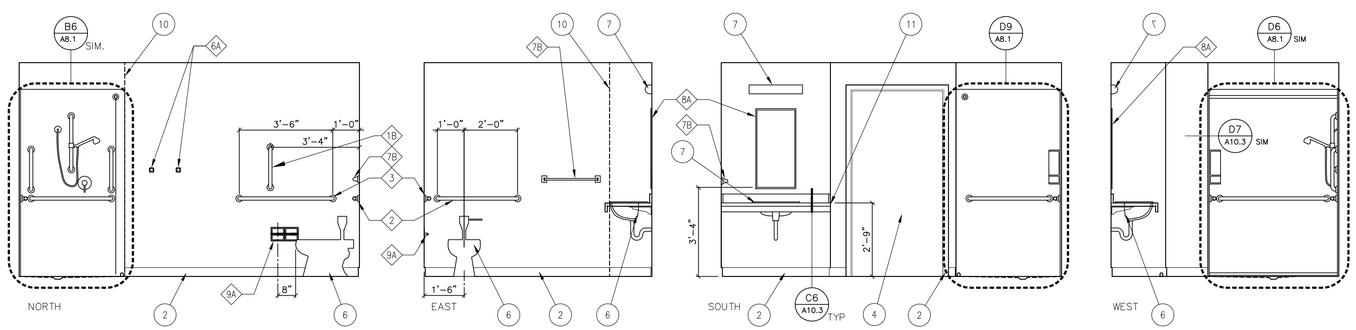

D1 BATHROOM (SINGLE)
3/8" = 1'-0"

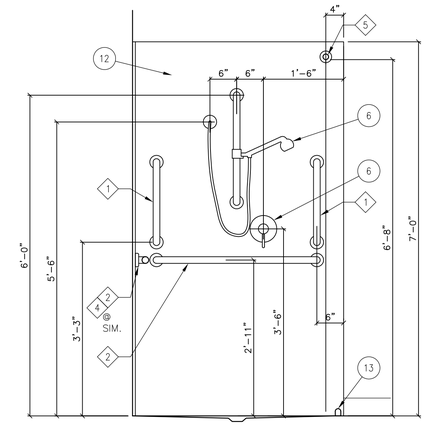

B6 ENLARGED SHOWER ELEVATION
3/4" = 1'-0"

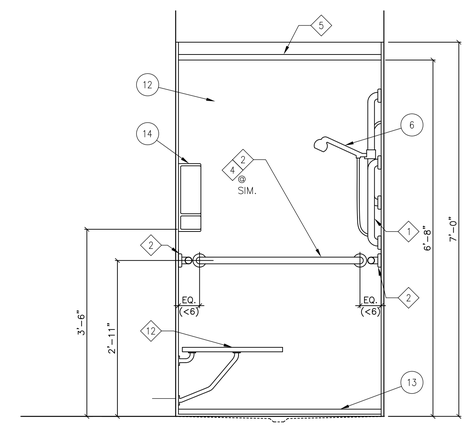

D6 ENLARGED SHOWER ELEVATION
1/2" = 1'-0"

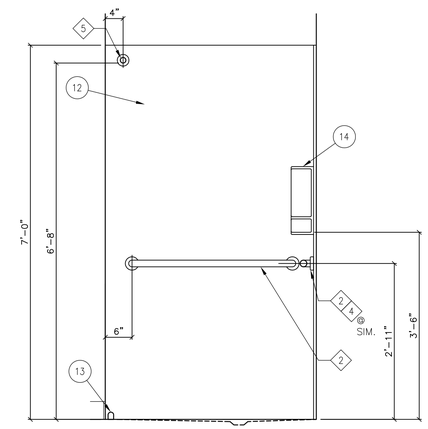

D9 ENLARGED SHOWER ELEVATION
1/2" = 1'-0"

GENERAL NOTES:

A. RE: A2.0 FOR BUILDING ASSEMBLIES AND RATED ASSEMBLY PENETRATION DETAILS.

B. RE: A2.10 FOR TYPICAL FIXTURE AND ACCESSORY KEY AND MOUNTING HEIGHTS.

C. RE: A3.1 FOR FINISH SCHEDULE.

D. RE: A3.2 FOR DOOR SCHEDULE.

E. RE: A3.3 FOR WINDOW SCHEDULE.

F. RE: A9.1 THRU A9.4 FOR CEILING INFORMATION.

G. CONTRACTOR SHALL PROVIDE BACKING FOR ALL WALL-MOUNTED CASEWORK, ACCESSORIES AND EQUIPMENT.

H. PROVIDE APPROPRIATE FLOOR TRANSITIONS BETWEEN DISSIMILAR FLOOR MATERIALS AS REQUIRED. RE: A3.1 FOR FLOOR FINISHES.

I. FIELD VERIFY ALL LOCATIONS INDICATED TO RECEIVE INTERIOR ARCHITECTURAL WOODWORK.

J. WHERE ITEMS ARE INDICATED TO BE PROVIDED BY OTHERS, CONTRACTOR SHALL COORDINATE THESE ITEMS AND ASSOCIATED REQUIREMENTS INTO THE WORK.

SHEET NOTES:

1. SOFFIT, RE: REFLECTED CEILING PLAN.
2. WALL BASE AS SCHEDULED.
3. WALL BEYOND.
4. DOOR, RE: FLOOR PLANS AND DOOR SCHEDULE.
5. VINYL WINDOW SYSTEM, RE: FLOOR PLANS AND WINDOW SCHEDULES.
6. PLUMBING FIXTURE, RE: PLUMBING DRAWINGS.
7. ELECTRICAL FIXTURE OR EQUIPMENT RE: ELECTRICAL DRAWINGS.
8. MANUFACTURED PLASTIC CASEWORK.
9. TASK LIGHT, TYP.
10. DASHED LINE INDICATES WALL IN FOREGROUND.
11. PROVIDE FINISH SURFACES AT EXPOSED ENDS (WHERE OCCURS)
12. CULTURED MARBLE SHOWER WALLS TO 7'-0" AFF.
13. COLLAPSIBLE WATER DAM, RE: PLUMBING DRAWINGS.
14. CULTURED MARBLE SOAP/SHAMPOO CORNER UNIT.
15. CASEWORK NOT IN CONTRACT. FOR REFERENCE ONLY AS PERTAINS TO BLOCKING AND OTHER RELATED ITEMS.

bloom design
INTERIORS
541.944.5533 552 A Street Ashland, OR 97520

REVISIONS	DATE

REGISTERED ARCHITECT
RAYMOND J. KISTLER
3172
ASHLAND, OREGON
STATE OF OREGON

kistler + small + white architects

KISTLER SMALL WHITE, ARCHITECTS
552 A STREET
ASHLAND, OREGON 97520
P: 541-488-8200
F: 541-552-9512
www.kistlersmallwhite.com

DEPARTMENT OF VETERANS AFFAIRS

SOUTHERN OREGON REHABILITATION CENTER & CLINICS

8495 CRATER LAKE HIGHWAY
WHITE CITY, OREGON

DRAWING TITLE:

INTERIOR ELEVATIONS

FULLY SPRINKLERED FACILITY

PROJECT TITLE
REPLACE DOM BLDG. 203

DRAWN BY:	DATE: 4 AUGUST 2014	DRAWING NO.: A8.1
CHECK BY:	VA PROJECT NO.: 692-339	DWG. OF

US DEPARTMENT OF VETERANS AFFAIRS

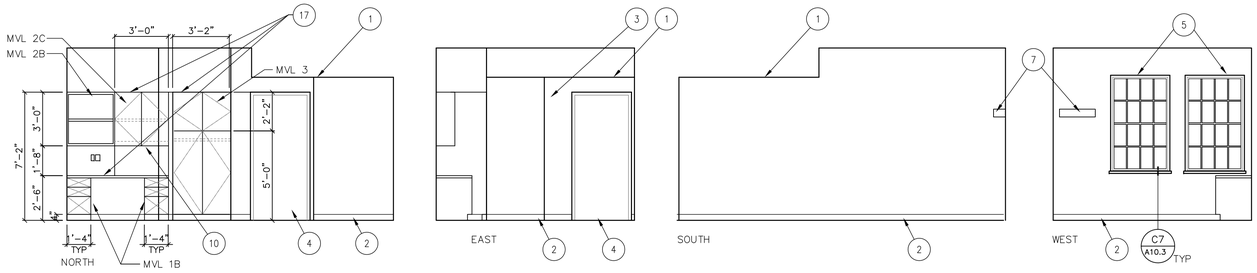

E1 274 – BEDROOM (SINGLE)
1/4" = 1'-0"

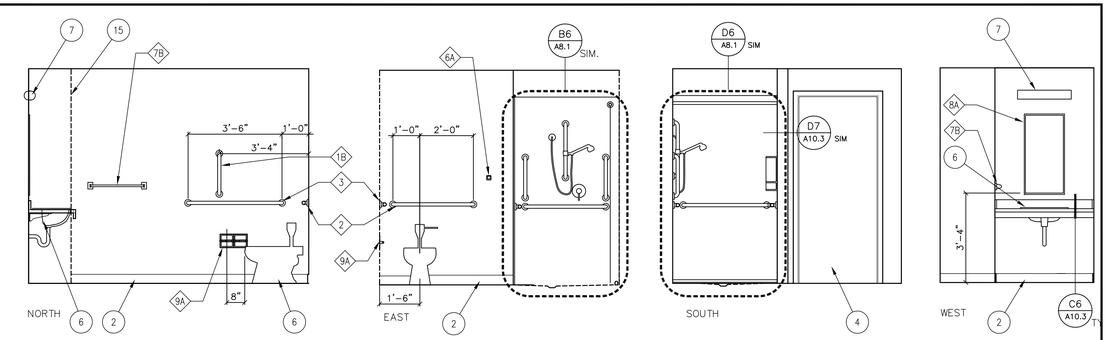

F1 274A – BATHROOM
3/8" = 1'-0"

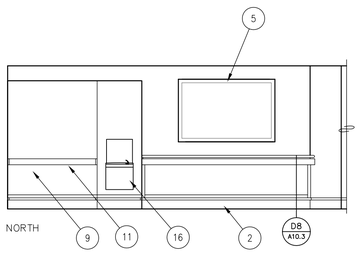

A1 C2 – CORRIDOR
1/4" = 1'-0"

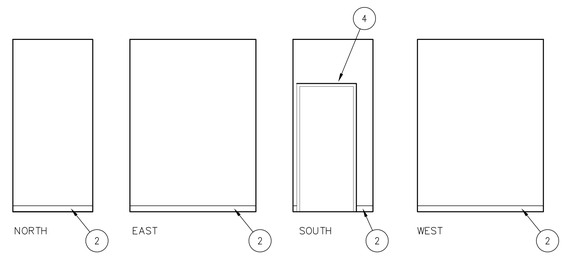

A3 101 – SPRINKLER
1/4" = 1'-0"

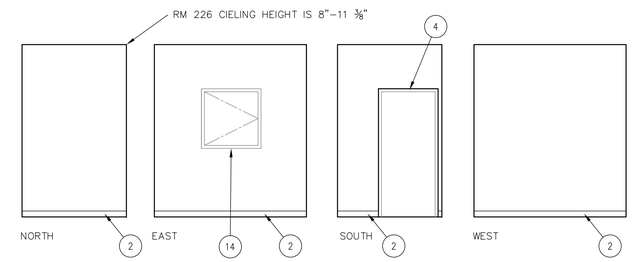

A4 124 – ELECTRICAL (226 – ELECTRICAL SIM.)
1/4" = 1'-0"

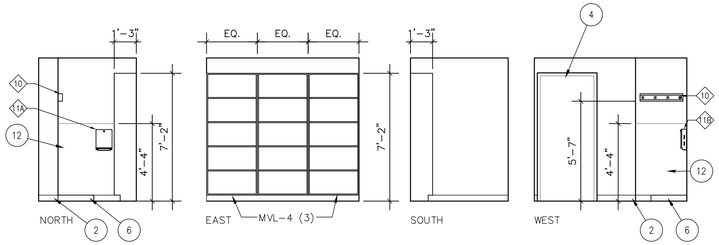

B1 151 – HOUSEKEEPING (251 HOUSEKEEPING SIMILAR)
1/4" = 1'-0"

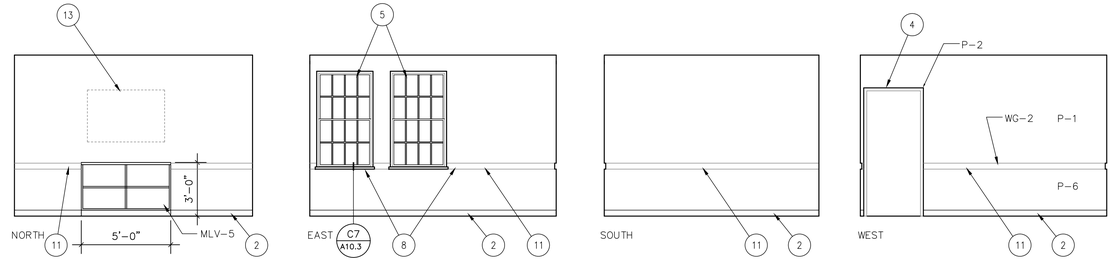

B2 152 – TV ROOM (118/222/252 – TV ROOM SIMILAR)
1/4" = 1'-0"

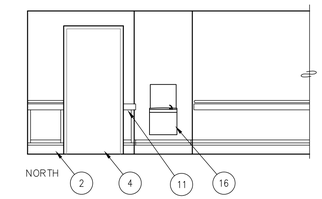

B3 C1A – CORRIDOR BOTTLE FILL
1/4" = 1'-0"

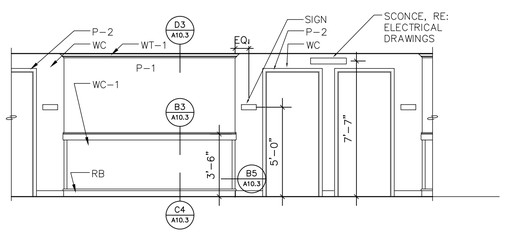

C1 PATIENT ROOM ENTRY DETAIL
1/4" = 1'-0"

GENERAL NOTES:

A. RE: A2.0 FOR BUILDING ASSEMBLIES AND RATED ASSEMBLY PENETRATION DETAILS.

B. RE: A2.10 FOR TYPICAL FIXTURE AND ACCESSORY KEY AND MOUNTING HEIGHTS.

C. RE: A3.1 FOR FINISH SCHEDULE.

D. RE: A3.2 FOR DOOR SCHEDULE.

E. RE: A3.3 FOR WINDOW SCHEDULE.

F. RE: A9.1 THRU A9.4 FOR CEILING INFORMATION.

G. CONTRACTOR SHALL PROVIDE BACKING FOR ALL WALL-MOUNTED ACCESSORIES AND EQUIPMENT.

H. PROVIDE APPROPRIATE FLOOR TRANSITIONS BETWEEN DISSIMILAR FLOOR MATERIALS AS REQUIRED. RE: A3.1 FOR FLOOR FINISHES.

I. FIELD VERIFY ALL LOCATIONS INDICATED TO RECEIVE INTERIOR ARCHITECTURAL WOODWORK.

J. WHERE ITEMS ARE INDICATED TO BE PROVIDED BY OTHERS, CONTRACTOR SHALL COORDINATE THESE ITEMS AND ASSOCIATED REQUIREMENTS INTO THE WORK.

SHEET NOTES:

1. SOFFIT, RE: REFLECTED CEILING PLAN
2. WALL BASE AS SCHEDULED.
3. WALL BEYOND.
4. DOOR, RE: FLOOR PLANS AND DOOR SCHEDULE.
5. WINDOW SYSTEM, RE: FLOOR PLANS AND WINDOW SCHEDULES.
6. PLUMBING FIXTURE, RE: PLUMBING DRAWINGS.
7. ELECTRICAL FIXTURE OR EQUIPMENT RE: ELECTRICAL DRAWINGS
8. ALIGN BOTTOM OF CHAIR RAIL WITH BOTTOM OF SILL.
9. RECYCLING ALCOVE
10. TASK LIGHT, TYP.
11. CHAIR RAIL, RE: A10.3–A9.
12. FRP PANEL.
13. WALL MOUNTED FLAT SCREEN T.V. BY OWNER.
14. 3' X 3' RATED ACCESS DOOR (OCCURS ONLY AT SIM.), COORDINATE LOCATION W/ PLUMBING EQUIPMENT ACCESS REQUIREMENTS.
15. DASHED LINE INDICATES WALL IN FOREGROUND
16. BOTTLE FILL
17. CASEWORK NOT IN CONTRACT. FOR REFERNCE ONLY AS PERTAINS TO BLOCKING AND OTHER RELATED ITEMS.

bloom design
INTERIORS
541.944.5533 552 A Street Ashland, OR 97520

REVISIONS	DATE

REGISTERED ARCHITECT
RAYMOND J. KISTLER
3172
ASHLAND, OREGON
STATE OF OREGON

kistler + small + white architects

KISTLER SMALL WHITE, ARCHITECTS
552 A STREET
ASHLAND, OREGON 97520
P: 541-488-8200
F: 541-552-9512
www.kistlersmallwhite.com

DEPARTMENT OF VETERANS AFFAIRS
SOUTHERN OREGON REHABILITATION CENTER & CLINICS
8495 CRATER LAKE HIGHWAY
WHITE CITY, OREGON

DRAWING TITLE:
INTERIOR ELEVATIONS

FULLY SPRINKLERED FACILITY

PROJECT TITLE
REPLACE DOM BLDG. 203

DRAWN BY:	DATE: 4 AUGUST 2014	DRAWING NO.: A8.2
CHECK BY:	VA PROJECT NO.: 692-339	DWG. OF

US DEPARTMENT OF VETERANS AFFAIRS

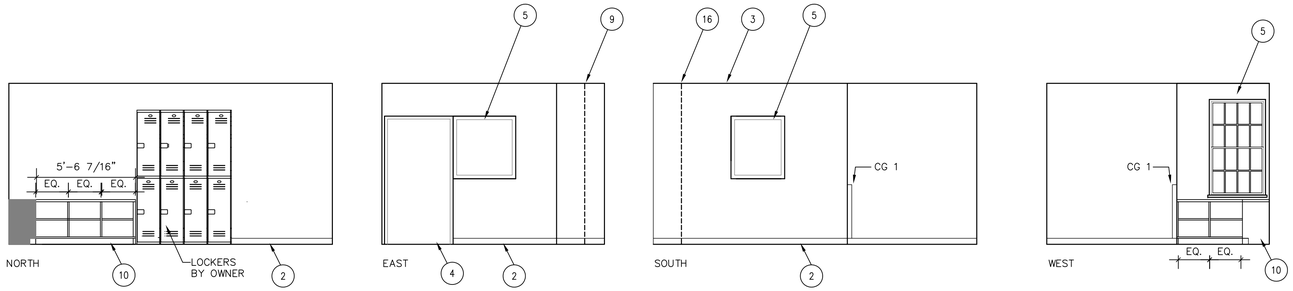

A1 102 – SSA OFFICE 1
1/4" = 1'-0"

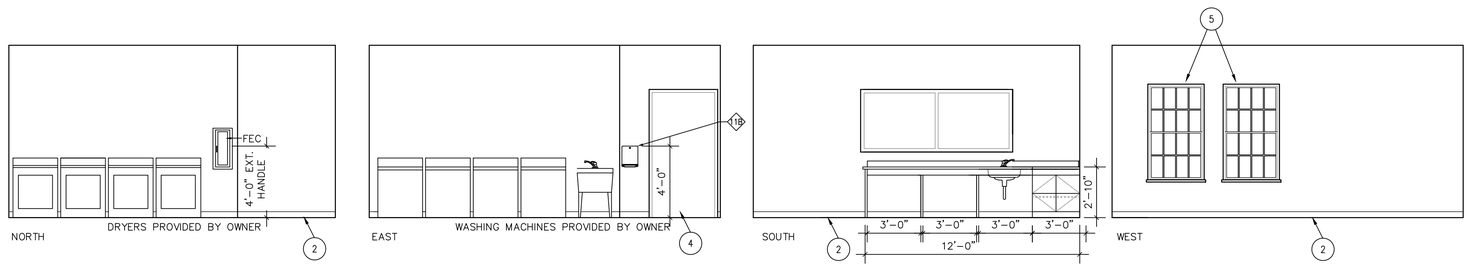

A2 104 – LAUNDRY
1/4" = 1'-0"

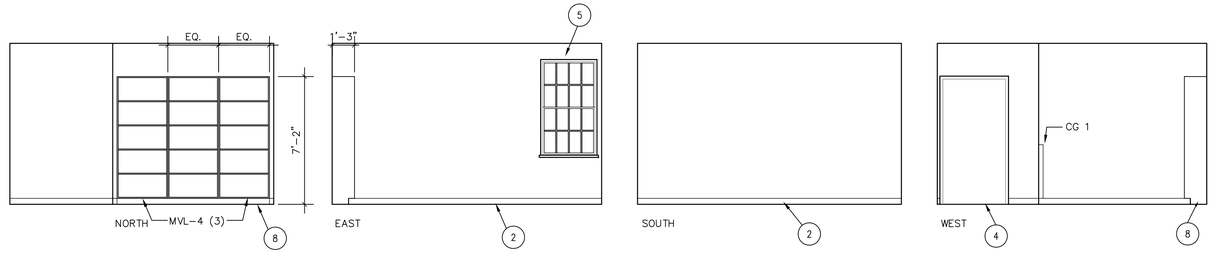

B1 121 – OFFICE
1/4" = 1'-0"

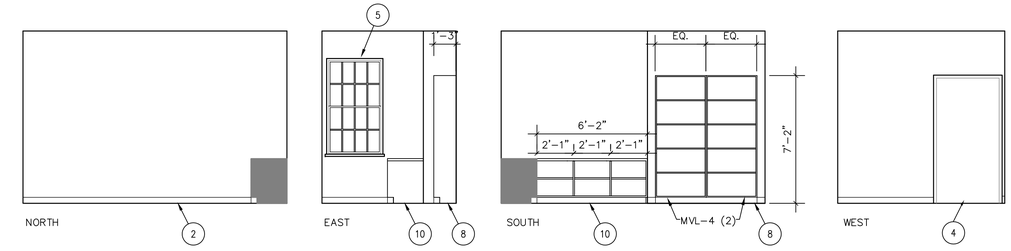

B3 122 – IT OFFICE
1/4" = 1'-0"

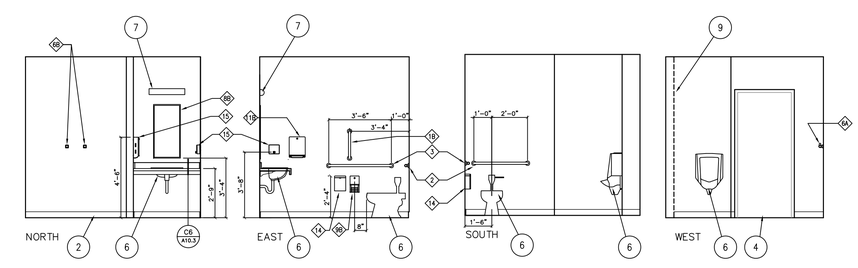

C1 123 – STAFF TOILET
1/4" = 1'-0"

GENERAL NOTES:

A. RE: A2.0 FOR BUILDING ASSEMBLIES AND RATED ASSEMBLY PENETRATION DETAILS.

B. RE: A2.10 FOR TYPICAL FIXTURE AND ACCESSORY MOUNTING HEIGHTS.

C. RE: A3.1 FOR FINISH SCHEDULE.

D. RE: A3.2 FOR DOOR SCHEDULE.

E. RE: A3.3 FOR WINDOW SCHEDULE.

F. RE: A9.1 THRU A9.4 FOR CEILING INFORMATION.

G. CONTRACTOR SHALL PROVIDE BACKING FOR ALL WALL-MOUNTED ACCESSORIES, EQUIPMENT, CASEWORK, AND LADDERS

H. PROVIDE APPROPRIATE FLOOR TRANSITIONS BETWEEN DISSIMILAR FLOOR MATERIALS AS REQUIRED. RE: A3.1 FOR FLOOR FINISHES.

I. FIELD VERIFY ALL LOCATIONS INDICATED TO RECEIVE INTERIOR ARCHITECTURAL WOODWORK.

J. WHERE ITEMS ARE INDICATED TO BE PROVIDED BY OTHERS, CONTRACTOR SHALL COORDINATE THESE ITEMS AND ASSOCIATED REQUIREMENTS INTO THE WORK.

SHEET NOTES:

1. NOT USED
2. WALL BASE AS SCHEDULED.
3. WALL BEYOND.
4. DOOR SYSTEM, RE: FLOOR PLANS AND DOOR SCHEDULE.
5. WINDOW SYSTEM, RE: FLOOR PLANS AND WINDOW SCHEDULES.
6. PLUMBING FIXTURE, RE: PLUMBING DRAWINGS.
7. ELECTRICAL FIXTURE OR EQUIPMENT, RE: ELECTRICAL DRAWINGS.
8. MANUFACTURTED PLASTIC CASEWORK
9. DASHED LINE INDICATES WALL IN FOREGROUND
10. CASEWORK NOT IN CONTRACT. FOR REFERENCE ONLY AS PERTAINS TO BLOCKING AND OTHER RELATED ITEMS.

bloom design INTERIORS
541.944.5533 552 A Street Ashland, OR 97520

REVISIONS	DATE

REGISTERED ARCHITECT RAYMOND J. KISTLER 3172 ASHLAND, OREGON STATE OF OREGON

kistler + small + white architects

KISTLER SMALL WHITE, ARCHITECTS
552 A STREET
ASHLAND, OREGON 97520
P: 541-488-6200
F: 541-552-9512
www.kistlersmallwhite.com

DEPARTMENT OF VETERANS AFFAIRS
SOUTHERN OREGON REHABILITATION CENTER & CLINICS
8495 CRATER LAKE HIGHWAY
WHITE CITY, OREGON

DRAWING TITLE:
INTERIOR ELEVATIONS
FULLY SPRINKLERED FACILITY

PROJECT TITLE
REPLACE DOM BLDG. 203

DRAWN BY:	DATE: 4 AUGUST 2014	DRAWING NO.: A8.3
CHECK BY:	VA PROJECT NO.: 692-339	DWG.43 OF 53

US DEPARTMENT OF VETERANS AFFAIRS

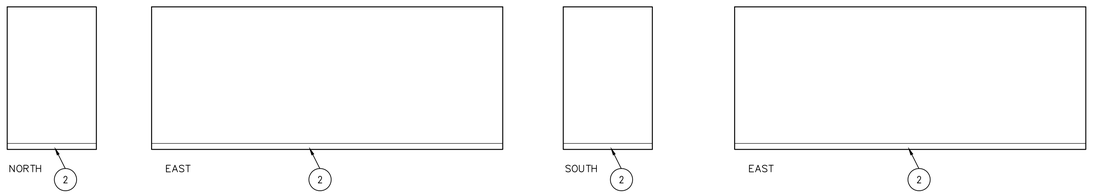

A1 172 – STORAGE
1/4" = 1'-0"

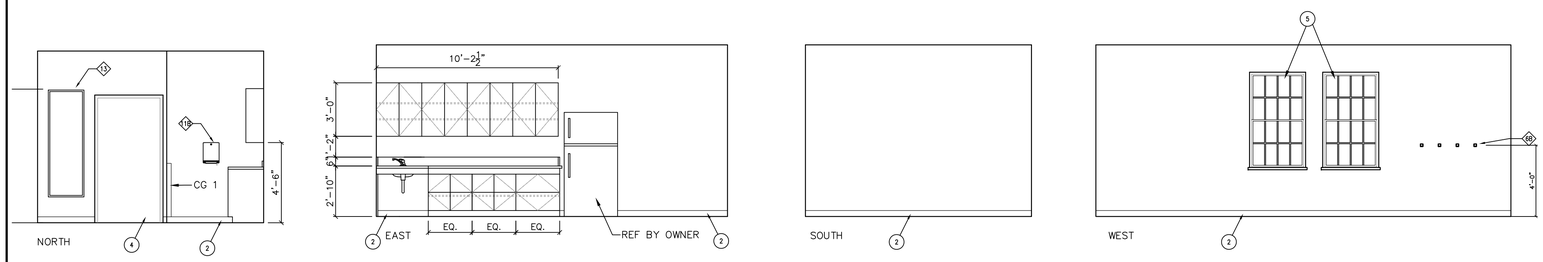

A2 174 – BREAK
1/4" = 1'-0"

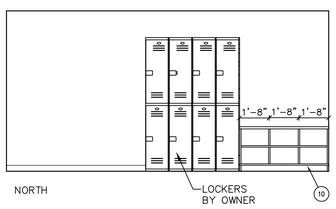

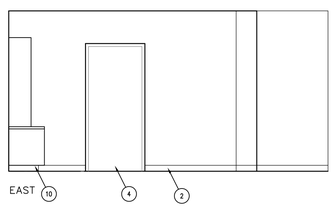

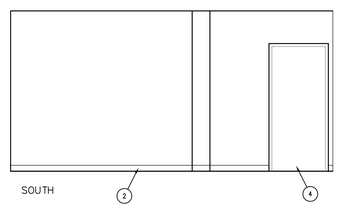

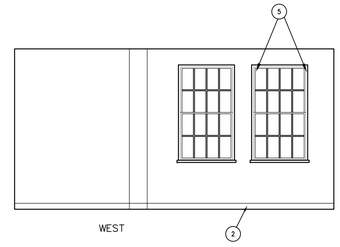

B1 202 – SSA OFFICE 2
1/4" = 1'-0"

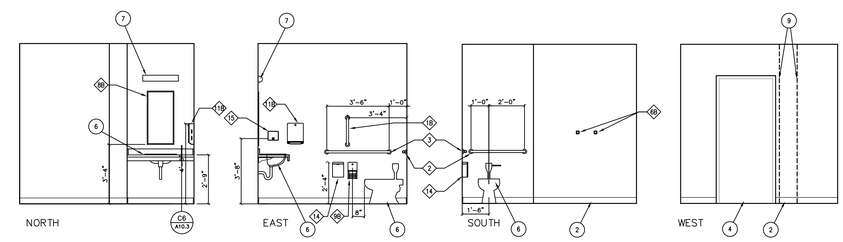

C1 225 – STAFF TOILET
1/4" = 1'-0"

GENERAL NOTES:

A. RE: A2.0 FOR BUILDING ASSEMBLIES AND RATED ASSEMBLY PENETRATION DETAILS.

B. RE: A2.10 FOR TYPICAL FIXTURE AND ACCESSORY MOUNTING HEIGHTS.

C. RE: A3.1 FOR FINISH SCHEDULE.

D. RE: A3.2 FOR DOOR SCHEDULE.

E. RE: A3.3 FOR WINDOW SCHEDULE.

F. RE: A9.1 THRU A9.4 FOR CEILING INFORMATION.

G. CONTRACTOR SHALL PROVIDE BACKING FOR ALL WALL–MOUNTED ACCESSORIES, EQUIPMENT, CASEWORK, AND LADDERS

H. PROVIDE APPROPRIATE FLOOR TRANSITIONS BETWEEN DISSIMILAR FLOOR MATERIALS AS REQUIRED. RE: A3.1 FOR FLOOR FINISHES.

I. FIELD VERIFY ALL LOCATIONS INDICATED TO RECEIVE INTERIOR ARCHITECTURAL WOODWORK.

J. WHERE ITEMS ARE INDICATED TO BE PROVIDED BY OTHERS, CONTRACTOR SHALL COORDINATE THESE ITEMS AND ASSOCIATED REQUIREMENTS INTO THE WORK.

SHEET NOTES:

1. NOT USED
2. WALL BASE AS SCHEDULED.
3. WALL BEYOND.
4. DOOR SYSTEM, RE: FLOOR PLANS AND DOOR SCHEDULE.
5. VINYL WINDOW SYSTEM, RE: FLOOR PLANS AND WINDOW SCHEDULES.
6. PLUMBING FIXTURE, RE: PLUMBING DRAWINGS.
7. ELECTRICAL FIXTURE OR EQUIPMENT, RE: ELECTRICAL DRAWINGS.
8. NOT USED
9. DASHED LINE INDICATES WALL IN FOREGROUND.
10. CASEWORK NOT IN CONTRACT. FOR REFERENCE ONLY AS PERTAINS TO BLOCKING AND OTHER RELTED ITEMS.

bloom design
INTERIORS
541.944.5533 552 A Street Ashland, OR 97520

REVISIONS	DATE

REGISTERED ARCHITECT
RAYMOND J. KISTLER
3172
ASHLAND, OREGON
STATE OF OREGON

kistler + small + white architects
KISTLER SMALL WHITE, ARCHITECTS
552 A STREET
ASHLAND, OREGON 97520
P: 541-488-8200
F: 541-552-9512
www.kistlersmallwhite.com

DEPARTMENT OF VETERANS AFFAIRS
SOUTHERN OREGON REHABILITATION CENTER & CLINICS
8495 CRATER LAKE HIGHWAY
WHITE CITY, OREGON

DRAWING TITLE:
INTERIOR ELEVATIONS
FULLY SPRINKLERED FACILITY

PROJECT TITLE
REPLACE DOM BLDG. 203

DRAWN BY:	DATE: 4 AUGUST 2014	DRAWING NO.: A8.4
CHECK BY:	VA PROJECT NO.: 692-339	DWG.44OF 54

US DEPARTMENT OF VETERANS AFFAIRS

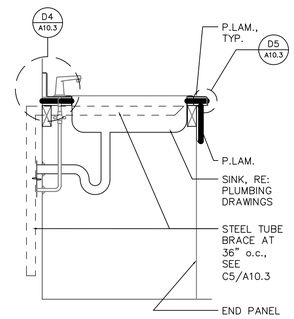

B3 COUNTER W/ SINK
1" = 1'-0"

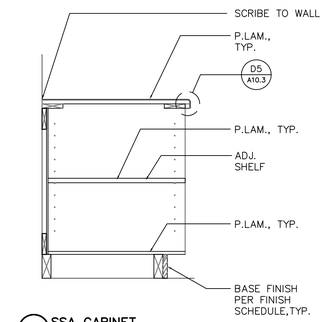

B4 SSA CABINET
1" = 1'-0"

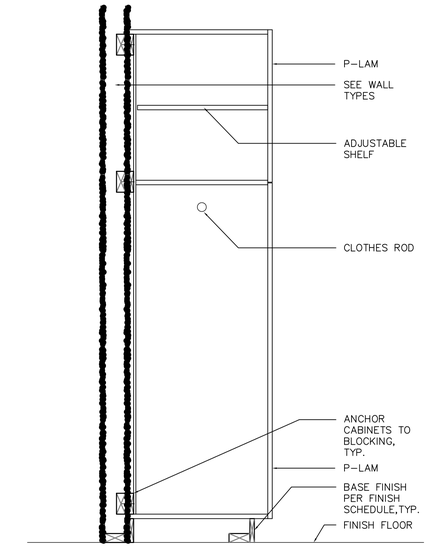

B5 WARDROBE CABINET
1" = 1'-0"

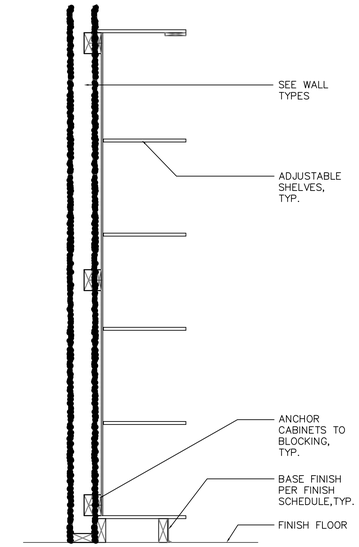

B6 SHELF CABINET
1" = 1'-0"

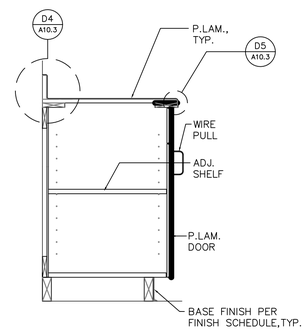

C3 LAUNDRY CABINET
1" = 1'-0"

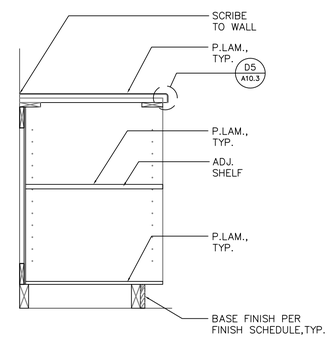

D3 TV CABINET
1" = 1'-0"

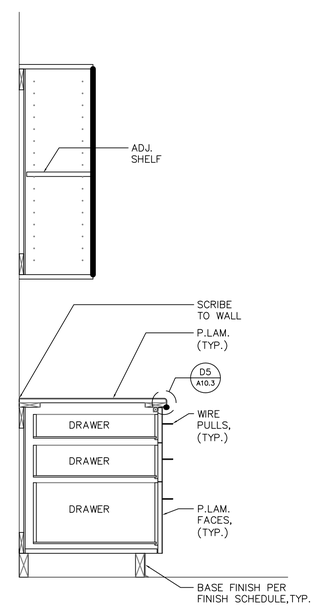

D4 DESK CABINET W/ OPEN UPPER
1" = 1'-0"

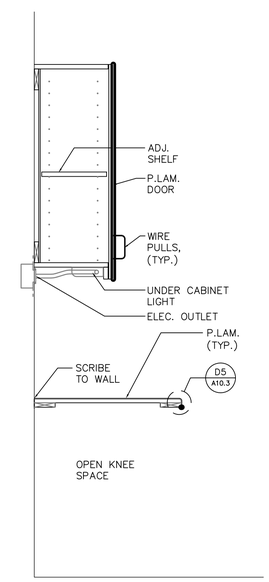

D5 DESK CABINET W/ STANDARD UPPER
1" = 1'-0"

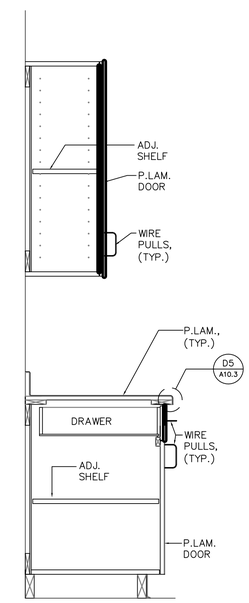

D6 BREAK RM. BASE CABINET W/ UPPER
1" = 1'-0"

REVISIONS	DATE

REGISTERED ARCHITECT
RAYMOND J. KISTLER
3172
ASHLAND, OREGON
STATE OF OREGON

kistler + small + white architects

KISTLER SMALL WHITE, ARCHITECTS
552 A STREET
ASHLAND, OREGON 97520
P: 541-488-8200
F: 541-552-9512
www.kistlersmallwhite.com

DEPARTMENT OF VETERANS AFFAIRS

SOUTHERN OREGON REHABILITATION CENTER & CLINICS

8495 CRATER LAKE HIGHWAY
WHITE CITY, OREGON

DRAWING TITLE:

CABINET SECTIONS

FULLY SPRINKLERED FACILITY

PROJECT TITLE
REPLACE DOM BLDG. 203

DRAWN BY:	DATE:	DRAWING NO.:
TM	4 AUGUST 2014	A8.5
CHECK BY: TI	VA PROJECT NO.: 692-339	DWG.45OF 56

US DEPARTMENT OF VETERANS AFFAIRS

LEGEND:

- 1/2 HOUR RATED FIRE BARRIER
- 1 HOUR RATED VERTICAL SHAFT ENCLOSURE
- 1 HOUR RATED FIRE BARRIER
- 2 HOUR RATED FIRE BARRIER WALL
- OS — LIGHTING DEVICES. RE: ELECTRICAL DRAWINGS
- SP — HVAC EQUIPMENT. RE: MECHANICAL DRAWINGS
- (A) X'–XX" — SUSPENDED ACOUSTICAL CEILING CEILING HEIGHT
- (B) X'–XX" — SUSPENDED GYPSUM BOARD CEILING – PAINTED CEILING HEIGHT

GENERAL NOTES:

A. LIGHT FIXTURES, GRILLES, DIFFUSERS, ETC. ARE SHOWN FOR GENERAL LOCATIONS ONLY. COORDINATE WITH APPROPRIATE MECHANICAL AND ELECTRICAL DRAWINGS.

B. ALL CEILING–MOUNTED EQUIPMENT SHALL BE LOCATED SQUARE AND SYMMETRICAL TO ADJACENT COMPONENTS OR CONSTRUCTION UNLESS NOTED OTHERWISE.

C. REFER TO FINISH SCHEDULE FOR EXPOSED DUCTWORK, CONDUIT, STRUCTURAL MEMBERS AND OTHER SUSPENDED ITEMS.

D. REFER TO FINISH SCHEDULE FOR ALL GYPSUM BOARD SURFACES/ FINISHES.

E. REFER TO A10.4–C7, D7, AND D9 FOR TYPICAL SUSPENEDED CEILING DETAILS.

F. CEILING ELEVATIONS INDICATED ARE TO BOTTOM OF FINISHED CEILING – TYPICAL

SHEET NOTES:

1. SOFFIT.
2. LINE OF ROOF OVERHANG ABOVE, RE: ROOF PLANS.
3. EXTERIOR CANOPY, RE: A10.4–A6.
4. HVAC EQUIPMENT OR DUCTWORK, RE: MECHANICAL DRAWINGS.
5. LIGHT FIXTURE OR ELECTRICAL EQUIPMENT, RE: ELECTRICAL DRAWINGS.
6. ACCESS DOOR, COORDINATE LOCATION AND SIZE W/ MECHANICAL AND PLUMBING DRAWINGS.
7. OPEN TO FLOOR ABOVE, RE: FLOOR PLANS.
8. RETAIN AND PROTECT EXISTING CONSTRUCTION.
9. DASHED LINE INDICATES CROWN MOULDING, RE: A8.2–D1.
10. HATCHED AREA INDICATES TERMINATION OF 1 HR RATED VERTICAL SHAFT ENCLOSURE AT BOTTOM SIDE OF FLOOR/CEILING ASSEMBLY, TYPICAL.
11. PLUMBING FIXTURE OR EQUIPMENT, RE: PLUMBING DRAWINGS.
12. IN THIS ROOM THE SUSPENDED ACOUSTICAL CEILING AND/OR THE SUSPENDED GYPSUM BOARD SERVES AS THE SMOKE BARRIER BETWEEN THE FIRST AND SECOND FLOOR. FLOOR/CEILING ASSEMBLY FC–6 SIM.

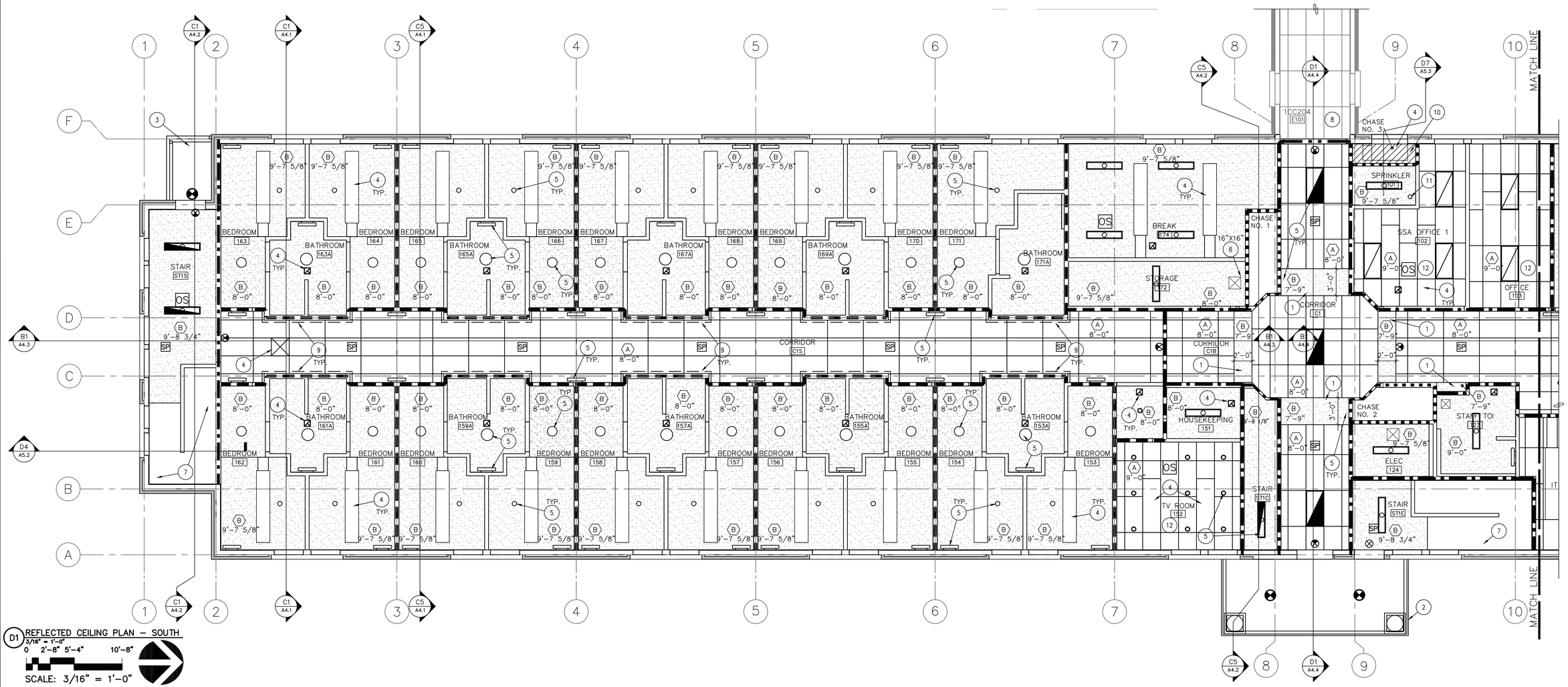

D1 REFLECTED CEILING PLAN – SOUTH
3/16" = 1'–0"
0 2'–8" 5'–4" 10'–8"
SCALE: 3/16" = 1'–0"

REVISIONS	DATE

REGISTERED ARCHITECT
RAYMOND J. KISTLER
3172
ASHLAND, OREGON
STATE OF OREGON

kistler + small + white architects

KISTLER SMALL WHITE, ARCHITECTS
552 A STREET
ASHLAND, OREGON 97520
P: 541-488-8200
F: 541-552-9512
www.kistlersmallwhite.com

DEPARTMENT OF VETERANS AFFAIRS
SOUTHERN OREGON REHABILITATION CENTER & CLINICS
8495 CRATER LAKE HIGHWAY
WHITE CITY, OREGON

DRAWING TITLE:
FIRST FLOOR
REFLECTED CEILING PLAN - SOUTH
FULLY SPRINKLERED FACILITY

PROJECT TITLE
REPLACE DOM BLDG. 203

DRAWN BY:	DATE:	DRAWING NO.:
JH	4 AUGUST 2014	A9.1
CHECK BY: TI	VA PROJECT NO.: 692-339	DWG. 46 OF 56

US DEPARTMENT OF VETERANS AFFAIRS

LEGEND:

- 1/2 HOUR RATED FIRE BARRIER
- 1 HOUR RATED VERTICAL SHAFT ENCLOSURE
- 1 HOUR RATED FIRE BARRIER
- 2 HOUR RATED FIRE BARRIER WALL
- OS — LIGHTING DEVICES. RE: ELECTRICAL DRAWINGS
- SP — HVAC EQUIPMENT. RE: MECHANICAL DRAWINGS
- A X'–XX" — SUSPENDED ACOUSTICAL CEILING CEILING HEIGHT
- B X'–XX" — SUSPENDED GYPSUM BOARD CEILING – PAINTED CEILING HEIGHT

GENERAL NOTES:

A. LIGHT FIXTURES, GRILLES, DIFFUSERS, ETC. ARE SHOWN FOR GENERAL LOCATIONS ONLY. COORDINATE WITH APPROPRIATE MECHANICAL AND ELECTRICAL DRAWINGS.

B. ALL CEILING–MOUNTED EQUIPMENT SHALL BE LOCATED SQUARE AND SYMMETRICAL TO ADJACENT COMPONENTS OR CONSTRUCTION UNLESS NOTED OTHERWISE.

C. REFER TO FINISH SCHEDULE FOR EXPOSED DUCTWORK, CONDUIT, STRUCTURAL MEMBERS AND OTHER SUSPENDED ITEMS.

D. REFER TO FINISH SCHEDULE FOR ALL GYPSUM BOARD SURFACES/ FINISHES.

E. REFER TO A10.4–C7, D7, AND D9 FOR TYPICAL SUSPENDED CEILING DETAILS.

SHEET NOTES:

1. NOT USED.
2. NOT USED.
3. EXTERIOR CANOPY, RE: A10.4–A6.
4. HVAC EQUIPMENT OR DUCTWORK, RE: MECHANICAL DRAWINGS.
5. LIGHT FIXTURE OR ELECTRICAL EQUIPMENT, RE: ELECTRICAL DRAWINGS.
6. NOT USED.
7. OPEN TO FLOOR ABOVE, RE: FLOOR PLANS.
8. DASHED LINE INDICATES CROWN MOULDING, RE: A8.2–D1.

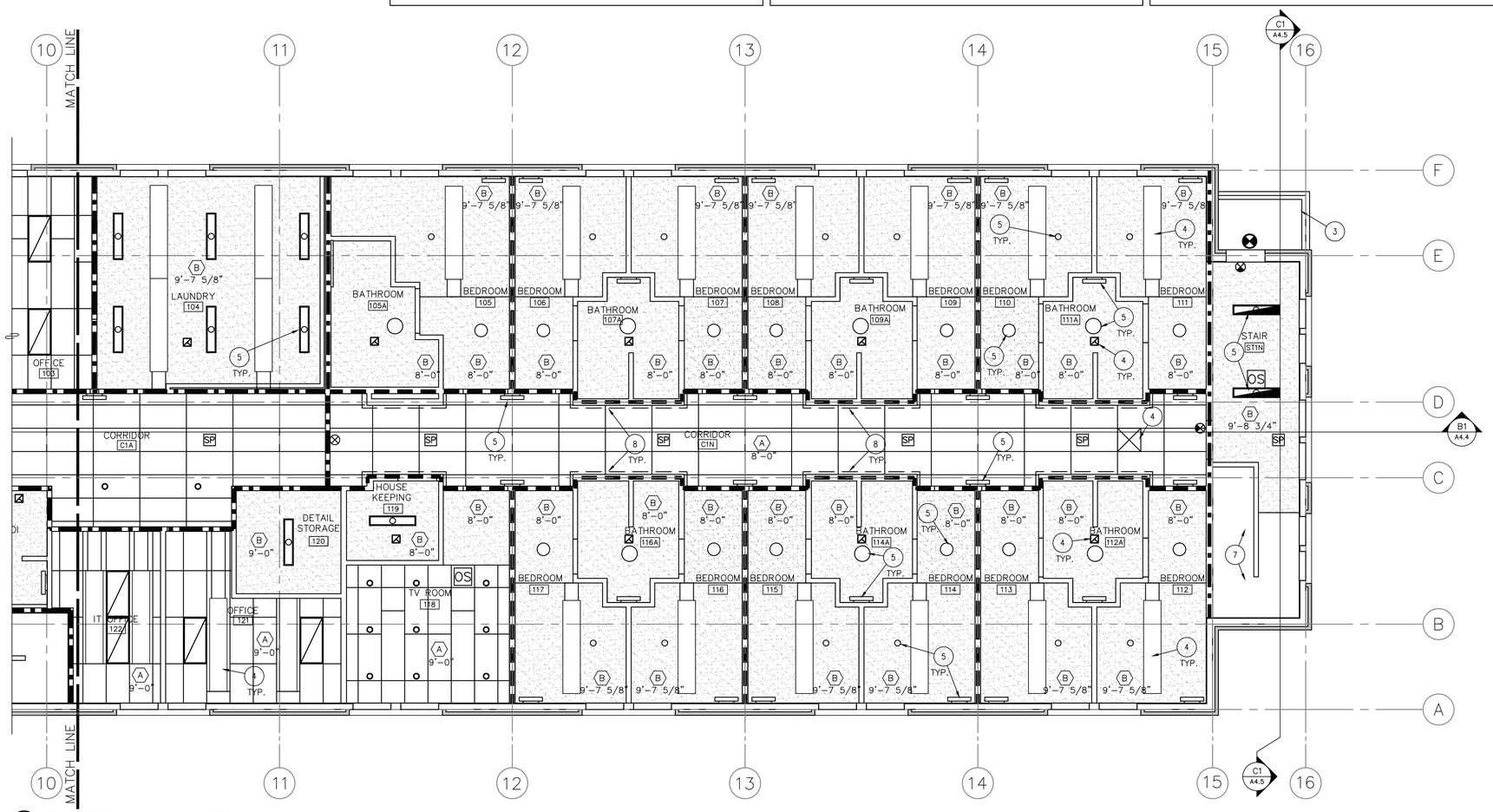

D1 REFLECTED CEILING PLAN – NORTH
3/16" = 1'–0"

0 2'–8" 5'–4" 10'–8"

SCALE: 3/16" = 1'–0"

REVISIONS	DATE

REGISTERED ARCHITECT
RAYMOND J. KISTLER
3172
ASHLAND, OREGON
STATE OF OREGON

kistler + small + white architects

KISTLER SMALL WHITE, ARCHITECTS
552 A STREET
ASHLAND, OREGON 97520
P: 541-488-8200
F: 541-552-9512
www.kistlersmallwhite.com

DEPARTMENT OF VETERANS AFFAIRS

SOUTHERN OREGON REHABILITATION CENTER & CLINICS

8495 CRATER LAKE HIGHWAY
WHITE CITY, OREGON

DRAWING TITLE:

FIRST FLOOR REFLECTED CEILING PLAN - NORTH

FULLY SPRINKLERED FACILITY

PROJECT TITLE
REPLACE DOM BLDG. 203

DRAWN BY:	DATE:	DRAWING NO.:
JH	4 AUGUST 2014	A9.2
CHECK BY: TI	VA PROJECT NO.: 692-339	DWG.47OF 56

US DEPARTMENT OF VETERANS AFFAIRS

LEGEND:

- 1/2 HOUR RATED FIRE BARRIER
- 1 HOUR RATED VERTICAL SHAFT ENCLOSURE
- 1 HOUR RATED FIRE BARRIER
- 2 HOUR RATED FIRE BARRIER WALL
- OS — LIGHTING DEVICES. RE: ELECTRICAL DRAWINGS
- SF — HVAC EQUIPMENT. RE: MECHANICAL DRAWINGS
- (A) X'–XX" — SUSPENDED ACOUSTICAL CEILING CEILING HEIGHT
- (B) X'–XX" — SUSPENDED GYPSUM BOARD CEILING – PAINTED CEILING HEIGHT

GENERAL NOTES:

A. LIGHT FIXTURES, GRILLES, DIFFUSERS, ETC. ARE SHOWN FOR GENERAL LOCATIONS ONLY. COORDINATE WITH APPROPRIATE MECHANICAL AND ELECTRICAL DRAWINGS.

B. ALL CEILING–MOUNTED EQUIPMENT SHALL BE LOCATED SQUARE AND SYMMETRICAL TO ADJACENT COMPONENTS OR CONSTRUCTION UNLESS NOTED OTHERWISE.

C. REFER TO FINISH SCHEDULE FOR EXPOSED DUCTWORK, CONDUIT, STRUCTURAL MEMBERS AND OTHER SUSPENDED ITEMS.

D. REFER TO FINISH SCHEDULE FOR ALL GYPSUM BOARD SURFACES/ FINISHES.

E. REFER TO A10.4–C7, D7, AND D9 FOR TYPICAL SUSPENDED CEILING DETAILS.

F. GYPSUM BOARD CEILINGS ARE CONTINUOUS FROM WALL TO WALL, CHILLED BEAMS ARE SURFACE MOUNT TO CEILING.

SHEET NOTES:

1. SOFFIT.
2. LINE OF ROOF OVERHANG ABOVE, RE: ROOF PLANS.
3. PLUMBING FIXTURE OR EQUIPMENT, RE: PLUMBING DRAWINGS.
4. HVAC EQUIPMENT OR DUCTWORK, RE: MECHANICAL DRAWINGS.
5. LIGHT FIXTURE OR ELECTRICAL EQUIPMENT, RE: ELECTRICAL DRAWINGS.
6. ACCESS DOOR, COORDINATE LOCATION AND SIZE W/ MECHANICAL OR PLUMBING DRAWINGS.
7. RETAIN AND PROTECT EXISTING CONSTRUCTION.
8. DASHED LINE INDICATES CROWN MOLDING, RE: A8.2–D1.
9. HATCHED AREA INDICATES TERMINATION OF 1 HR RATED VERTICAL SHAFT ENCLOSURE AT BOTTOM SIDE OF ROOF TRUSSES, TYPICAL. PROVIDE 1 HR–RATED HORIZONTAL ASSEMBLY, SEE C5–A4.2.
10. CEILING IN STORAGE ROOMS SERVES AS A SMOKE BARRIER. PENETRATIONS MUST BE IN ACCORDANCE WITH NFPA 101, 8.5.6.
11. IN THIS ROOM THE SUSPENDED ACOUSTICAL CEILING AND/OR THE SUSPENDED GYPSUM BOARD SERVES AS THE SMOKE BARRIER BETWEEN THE SECOND FLOOR AND THE ATTIC ABOVE.
12. THE NORTH–SOUTH LAYOUT OF SUSPENDED ACOUSTICAL CEILING IN THIS ROOM IS BASED ON PLACEMENT OF CHILLED BEAMS TO FIT BETWEEN ROOF TRUSSES. COORDINATE AS REQUIRED.
13. OPEN TO STRUCTURE ABOVE.

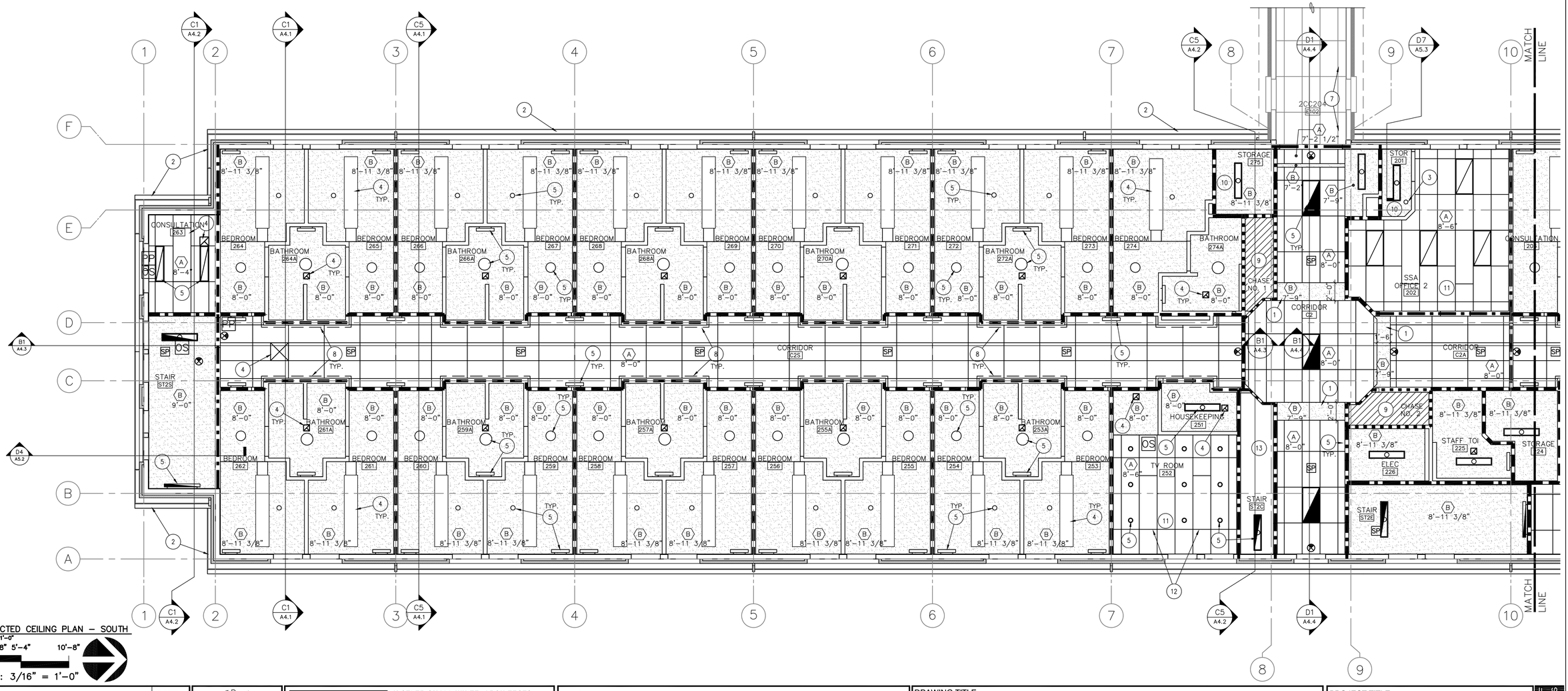

D1 REFLECTED CEILING PLAN – SOUTH
3/16" = 1'–0"
0 2'–8" 5'–4" 10'–8"
SCALE: 3/16" = 1'–0"

REVISIONS	DATE

REGISTERED ARCHITECT
RAYMOND J. KISTLER
3172
ASHLAND, OREGON
STATE OF OREGON

kistler + small + white architects

KISTLER SMALL WHITE, ARCHITECTS
552 A STREET
ASHLAND, OREGON 97520
P: 541-488-8200
F: 541-552-9512
www.kistlersmallwhite.com

DEPARTMENT OF VETERANS AFFAIRS

SOUTHERN OREGON REHABILITATION CENTER & CLINICS

8495 CRATER LAKE HIGHWAY
WHITE CITY, OREGON

DRAWING TITLE:

SECOND FLOOR
REFLECTED CEILING PLAN - SOUTH

FULLY SPRINKLERED FACILITY

PROJECT TITLE
REPLACE DOM BLDG. 203

DRAWN BY:	DATE:	DRAWING NO.:
TM	4 AUGUST 2014	A9.3
CHECK BY:	VA PROJECT NO.:	
TI	692-339	DWG.48OF 56

US DEPARTMENT OF VETERANS AFFAIRS

LEGEND:

- 1/2 HOUR RATED FIRE BARRIER
- 1 HOUR RATED VERTICAL SHAFT ENCLOSURE
- 1 HOUR RATED FIRE BARRIER
- 2 HOUR RATED FIRE BARRIER WALL
- OS — LIGHTING DEVICES. RE: ELECTRICAL DRAWINGS
- SP — HVAC EQUIPMENT. RE: MECHANICAL DRAWINGS
- (A) X'–XX" — SUSPENDED ACOUSTICAL CEILING CEILING HEIGHT
- (B) X'–XX" — SUSPENDED GYPSUM BOARD CEILING – PAINTED CEILING HEIGHT

GENERAL NOTES:

A. LIGHT FIXTURES, GRILLES, DIFFUSERS, ETC. ARE SHOWN FOR GENERAL LOCATIONS ONLY. COORDINATE WITH APPROPRIATE MECHANICAL AND ELECTRICAL DRAWINGS.

B. ALL CEILING–MOUNTED EQUIPMENT SHALL BE LOCATED SQUARE AND SYMMETRICAL TO ADJACENT COMPONENTS OR CONSTRUCTION UNLESS NOTED OTHERWISE.

C. REFER TO FINISH SCHEDULE FOR EXPOSED DUCTWORK, CONDUIT, STRUCTURAL MEMBERS AND OTHER SUSPENDED ITEMS.

D. REFER TO FINISH SCHEDULE FOR ALL GYPSUM BOARD SURFACES/ FINISHES.

E. REFER TO A10.4–C7, D7, AND D9 FOR TYPICAL SUSPENDED CEILING DETAILS.

SHEET NOTES:

1. NO NOTE PROVIDED.
2. LINE OF ROOF OVERHANG ABOVE, RE: ROOF PLANS.
3. NO NOTE PROVIDED.
4. HVAC EQUIPMENT OR DUCTWORK, RE: MECHANICAL DRAWINGS.
5. LIGHT FIXTURE OR ELECTRICAL EQUIPMENT, RE: ELECTRICAL DRAWINGS.
6. ACCESS DOOR, COORDINATE LOCATION AND SIZE W/ PLUMBING DRAWINGS.
7. DASHED LINE INDICATES CROWN MOULDING, RE: A8.2–D1.

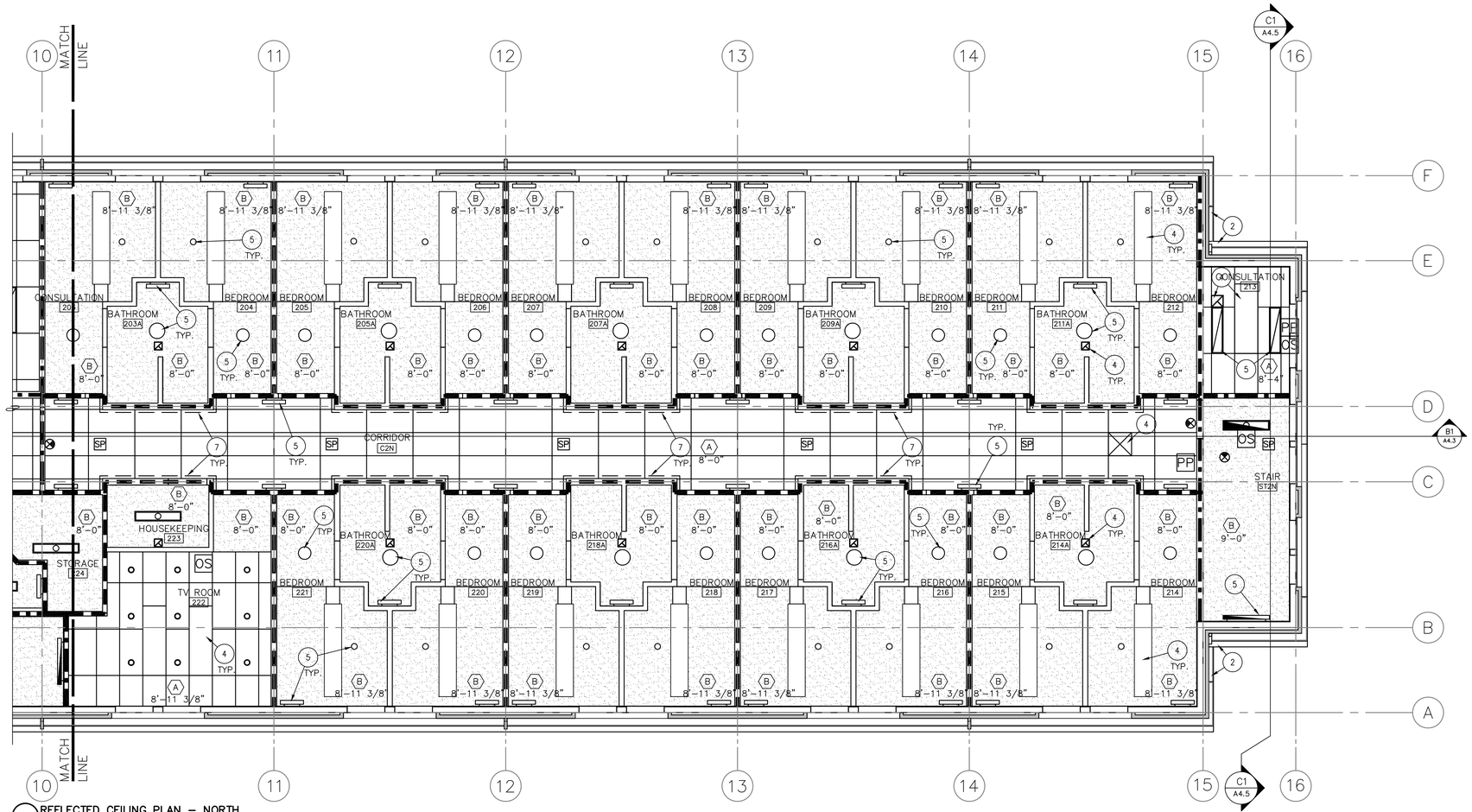

D1 REFLECTED CEILING PLAN – NORTH
3/16" = 1'–0"

0 2'–8" 5'–4" 10'–8"

SCALE: 3/16" = 1'–0"

REVISIONS	DATE

REGISTERED ARCHITECT
RAYMOND J. KISTLER
3172
ASHLAND, OREGON
STATE OF OREGON

kistler + small + white architects

KISTLER SMALL WHITE, ARCHITECTS
552 A STREET
ASHLAND, OREGON 97520
P: 541-488-8200
F: 541-552-9512
www.kistlersmallwhite.com

DEPARTMENT OF VETERANS AFFAIRS

SOUTHERN OREGON REHABILITATION CENTER & CLINICS

8495 CRATER LAKE HIGHWAY
WHITE CITY, OREGON

DRAWING TITLE:

SECOND FLOOR
REFLECTED CEILING PLAN - NORTH

FULLY SPRINKLERED FACILITY

PROJECT TITLE
REPLACE DOM BLDG. 203

DRAWN BY:	DATE:	DRAWING NO.:
TM	4 AUGUST 2014	A9.4
CHECK BY: TI	VA PROJECT NO.: 692-339	DWG.49OF 56

US DEPARTMENT OF VETERANS AFFAIRS

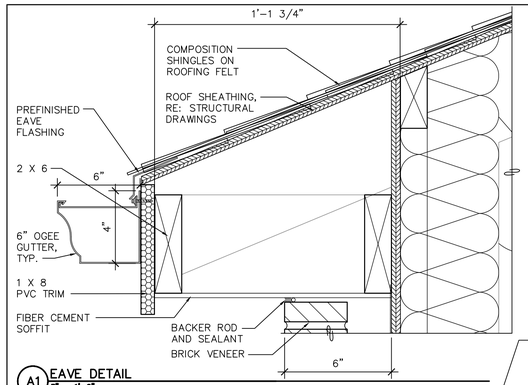

A1 EAVE DETAIL
3" = 1'-0"

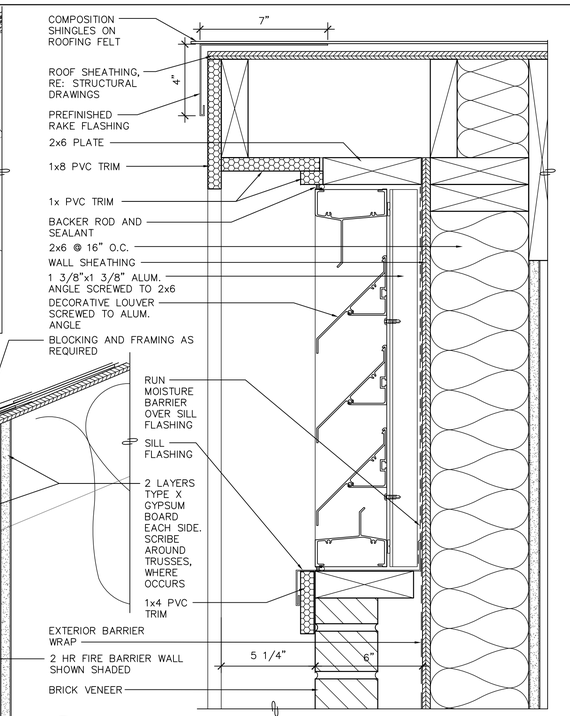

B3 RAKE DETAIL @ DECORATIVE LOUVER
3" = 1'-0"

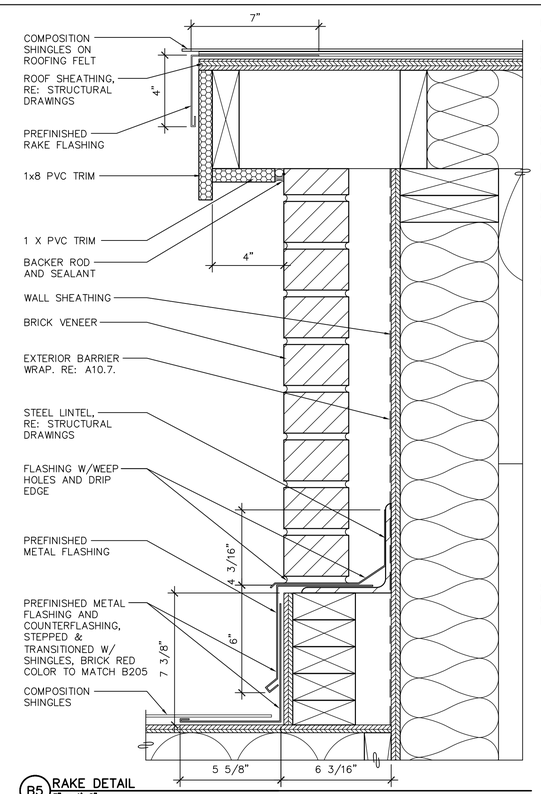

B5 RAKE DETAIL
3" = 1'-0"

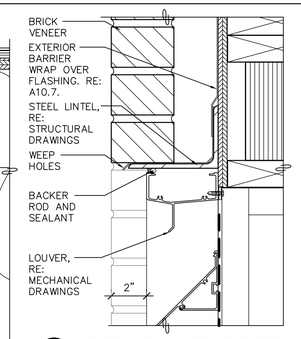

A7 OUTSIDE AIR LOUVER HEAD DETAIL
3" = 1'-0"

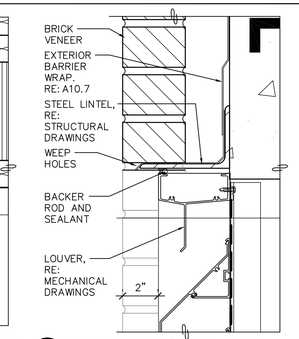

A8 EXHAUST LOUVER HEAD DETAIL
3" = 1'-0"

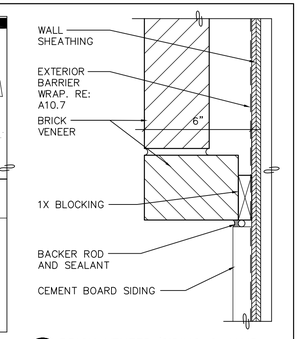

A9 BRICK VENEER/SIDING @ JAMB
3" = 1'-0"

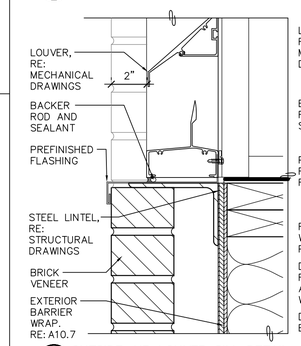

B7 OUTSIDE AIR LOUVER SILL DETAIL
3" = 1'-0"

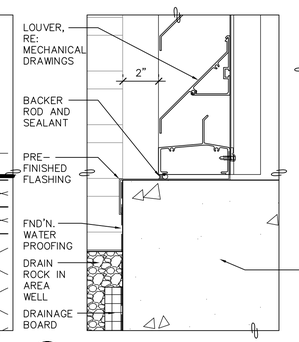

B8 EXHAUST LOUVER SILL DETAIL
3" = 1'-0"

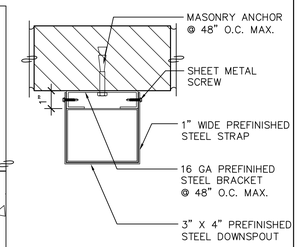

B9 DOWNSPOUT ATTACHMENT
3" = 1'-0"

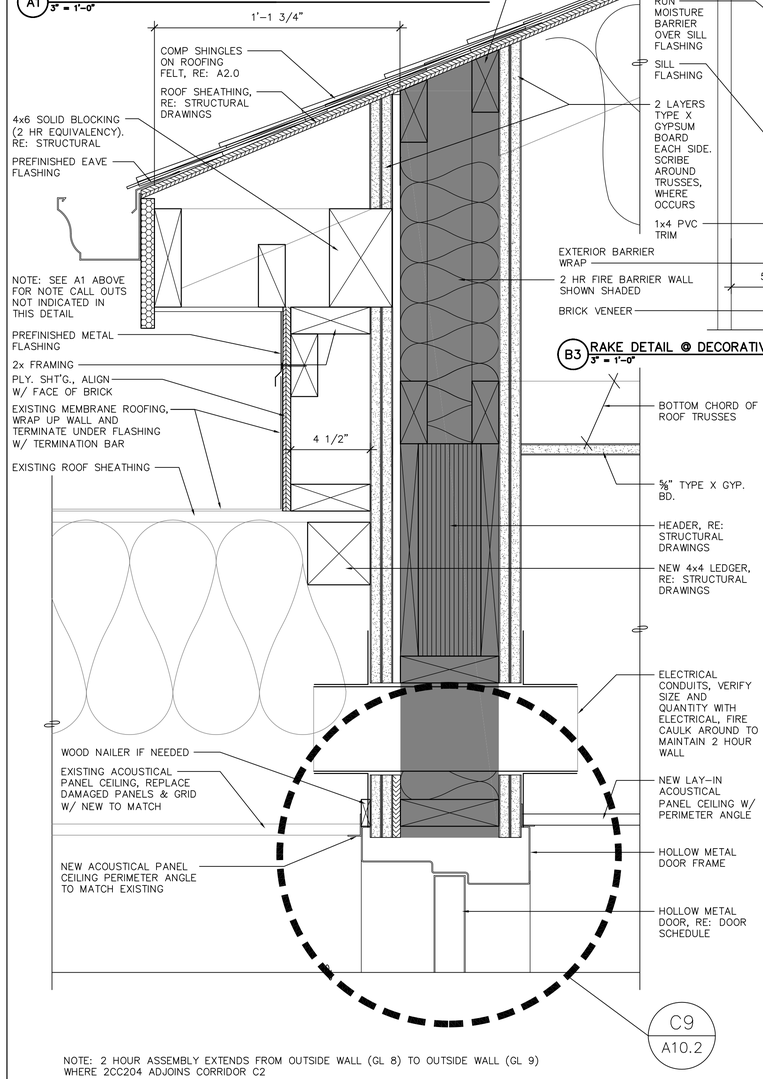

NOTE: 2 HOUR ASSEMBLY EXTENDS FROM OUTSIDE WALL (GL 8) TO OUTSIDE WALL (GL 9) WHERE 2CC204 ADJOINS CORRIDOR C2

D1 EAVE DETAIL
3" = 1'-0"

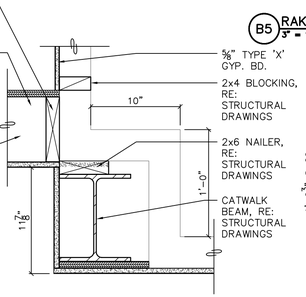

C4 CATWALK SUPPORT BEAM
1 1/2" = 1'-0"

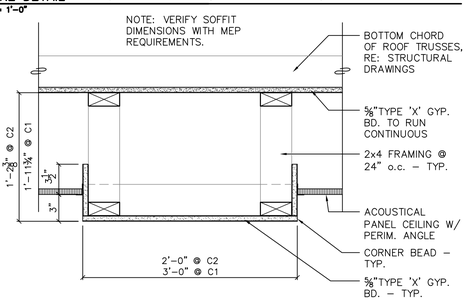

C5 C2 CORRIDOR SOFFIT DETAIL – C1 CORRIDOR SIM.
1 1/2" = 1'-0"

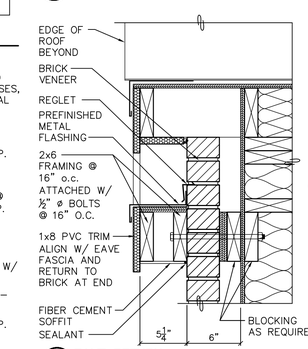

C7 EAVE RETURN
1 1/2" = 1'-0"

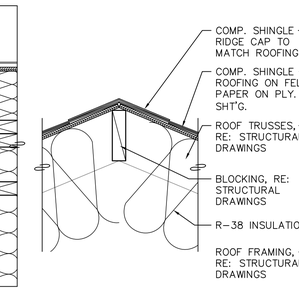

C8 RIDGE
1 1/2" = 1'-0"

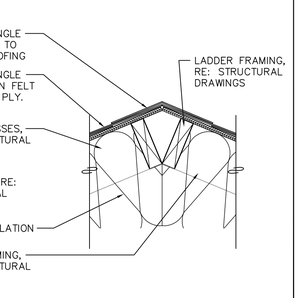

C9 RIDGE
1 1/2" = 1'-0"

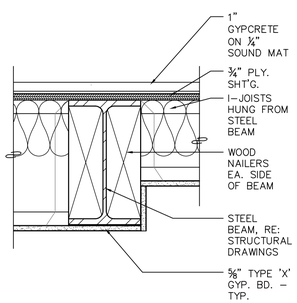

D4 SECOND FLOOR CORRIDOR SUPPORT BEAM
1 1/2" = 1'-0"

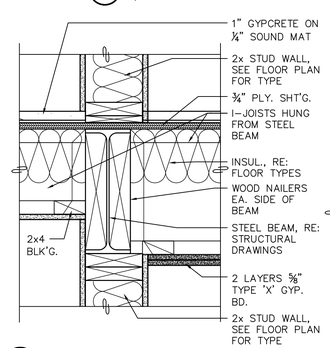

D5 SECOND FLOOR CORRIDOR SUPPORT BEAM
1 1/2" = 1'-0"

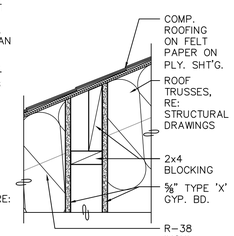

D6 STAIR WALL AT ROOF
1 1/2" = 1'-0"

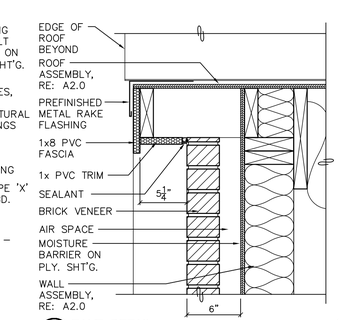

D7 EAVE DETAIL
1 1/2" = 1'-0"

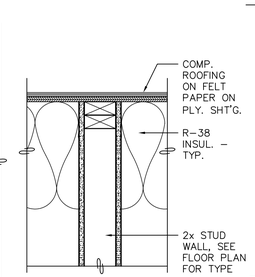

D8 STAIR WALL AT ROOF
1 1/2" = 1'-0"

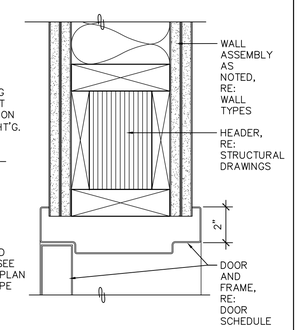

D9 TUNNEL DOOR HEAD
3" = 1'-0"

REVISIONS	DATE

REGISTERED ARCHITECT
RAYMOND J. KISTLER
3172
ASHLAND, OREGON
STATE OF OREGON

kistler + small + white architects

KISTLER SMALL WHITE, ARCHITECTS
552 A STREET
ASHLAND, OREGON 97520
P: 541-488-8200
F: 541-552-9512
www.kistlersmallwhite.com

DEPARTMENT OF VETERANS AFFAIRS

SOUTHERN OREGON REHABILITATION CENTER & CLINICS

8495 CRATER LAKE HIGHWAY
WHITE CITY, OREGON

DRAWING TITLE:

BUILDING ENVELOPE DETAILS

FULLY SPRINKLERED FACILITY

PROJECT TITLE
REPLACE DOM BLDG. 203

DRAWN BY:	DATE: 4 AUGUST 2014	DRAWING NO.: A10.1
CHECK BY:	VA PROJECT NO.: 692-339	DWG.50OF 56

U.S. DEPARTMENT OF VETERANS AFFAIRS

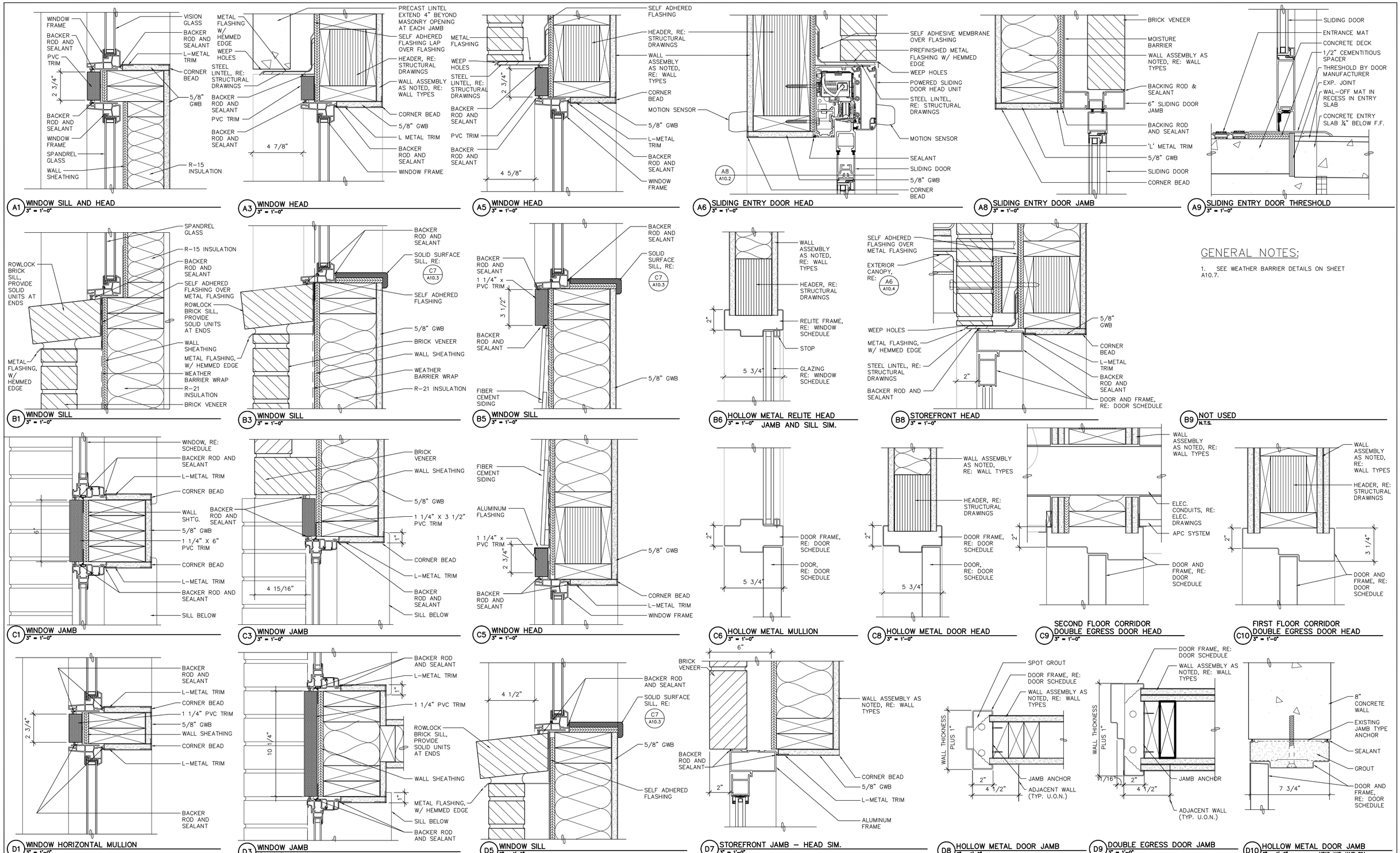

GENERAL NOTES:

1. SEE WEATHER BARRIER DETAILS ON SHEET A10.7.

REVISIONS	DATE

REGISTERED ARCHITECT
RAYMOND J. KISTLER
3172
ASHLAND, OREGON
STATE OF OREGON

kistler + small + white architects

KISTLER SMALL WHITE, ARCHITECTS
552 A STREET
ASHLAND, OREGON 97520
P: 541-488-8200
F: 541-552-9512
www.kistlersmallwhite.com

DEPARTMENT OF VETERANS AFFAIRS

SOUTHERN OREGON REHABILITATION CENTER & CLINICS

8495 CRATER LAKE HIGHWAY
WHITE CITY, OREGON

DRAWING TITLE:

OPENING DETAILS

FULLY SPRINKLERED FACILITY

PROJECT TITLE
REPLACE DOM BLDG. 203

DRAWN BY:	DATE: 4 AUGUST 2014	DRAWING NO.: A10.2
CHECK BY:	VA PROJECT NO.: 692-339	DWG.51 OF 56

U.S. DEPARTMENT OF VETERANS AFFAIRS

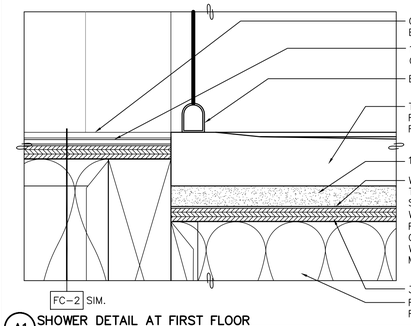

A1 SHOWER DETAIL AT FIRST FLOOR
3" = 1'-0"

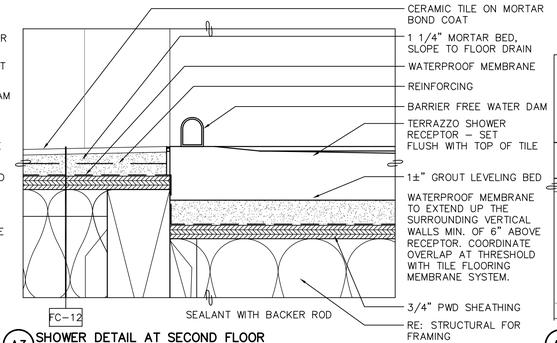

A3 SHOWER DETAIL AT SECOND FLOOR
3" = 1'-0"

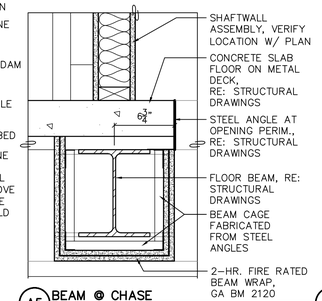

A5 BEAM @ CHASE
1 1/2" = 1'-0"

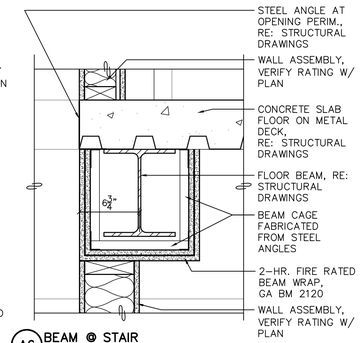

A6 BEAM @ STAIR
1 1/2" = 1'-0"

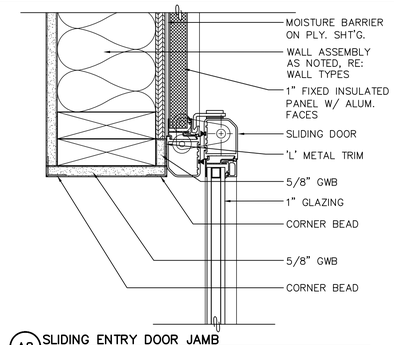

A8 SLIDING ENTRY DOOR JAMB
3" = 1'-0"

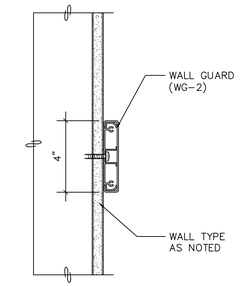

A9 CHAIR RAIL DETAIL
3" = 1'-0"

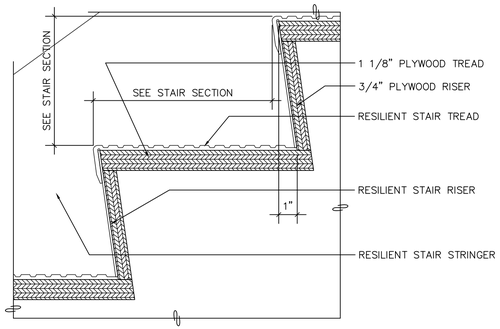

B1 STAIR TREAD AND RISER
3" = 1'-0"

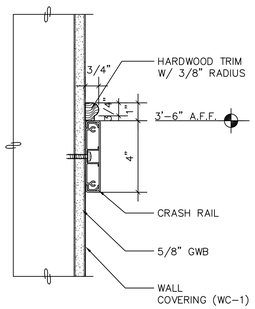

B3 WAINSCOT TOP RAIL (WG-1)
3" = 1'-0"

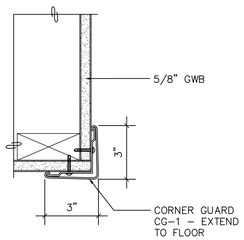

B4 CORNER GUARD
3" = 1'-0"

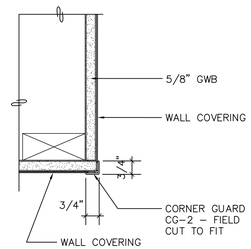

B5 CORNER GUARD @ WAINSCOT
3" = 1'-0"

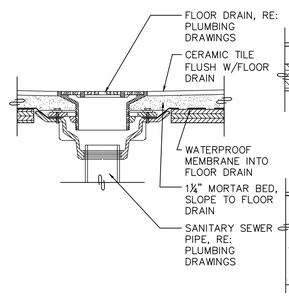

B6 FLOOR DRAIN AT SECOND FLOOR
3" = 1'-0"

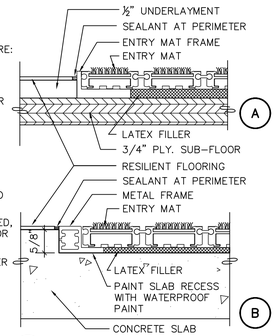

B7 ENTRY MAT SYSTEM
6" = 1'-0"

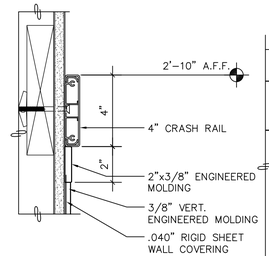

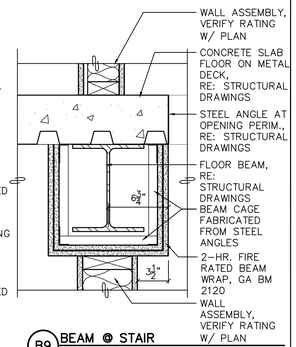

B9 BEAM @ STAIR
1 1/2" = 1'-0"

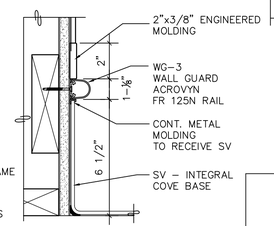

C8 WAINSCOT @ CORRIDOR
3" = 1'-0"

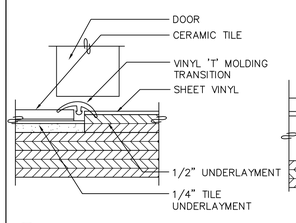

C1 CT AT RESILIENT FLOORING – 1ST
6" = 1'-0"

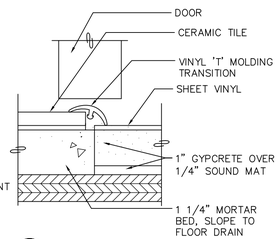

C2 CT AT RESILIENT FLOORING – 2ND
6" = 1'-0"

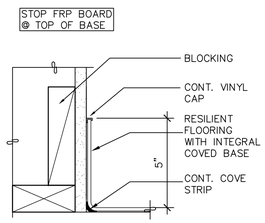

C3 INTEGRAL COVE BASE
3" = 1'-0"

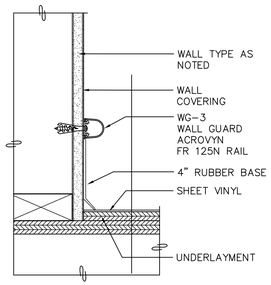

C4 FLOOR BASE DETAIL
3" = 1'-0"

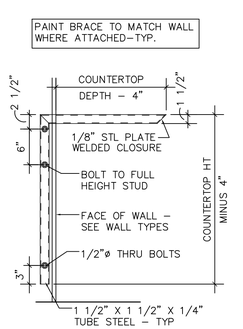

C5 COUNTER SUPPORT
1" = 1'-0"

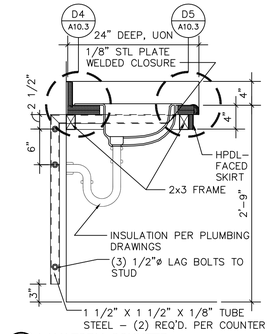

C6 LAVATORY COUNTER
1" = 1'-0"

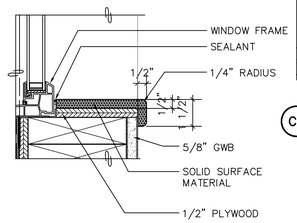

NOTE: EXTEND SILL 1" BEYOND WINDOW JAMB OPENING EACH SIDE AND PROVIDE ¼" RADIUS @ OUTSIDE EDGE RETURN.

C7 SOLID SURFACE WINDOW SILL
3" = 1'-0"

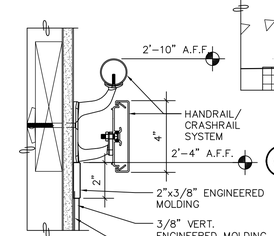

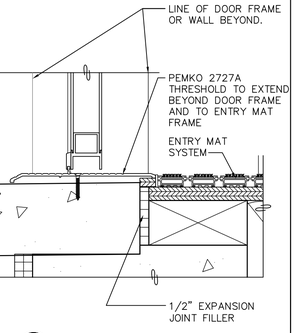

C9 DOOR SILL AT ENTRY SYSTEM (SWINGING)
3" = 1'-0"

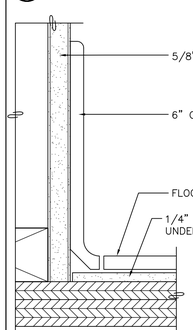

D1 CT COVE BASE AT FIRST FLOOR
6" = 1'-0"

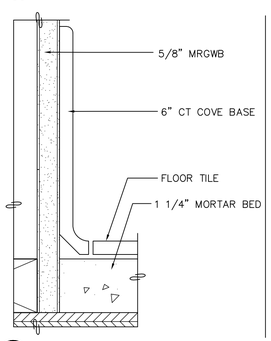

D2 CT COVE BASE AT SECOND FLOOR
6" = 1'-0"

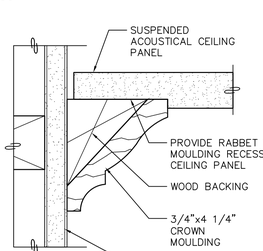

D3 CROWN MOULDING
6" = 1'-0"

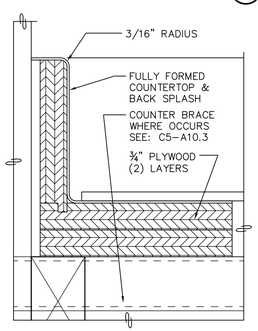

D4 LAVATORY COUNTER BACKSPLASH
6" = 1'-0"

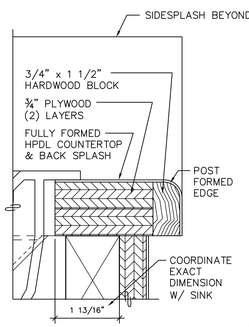

D5 LAVATORY COUNTER DRIP EDGE
6" = 1'-0"

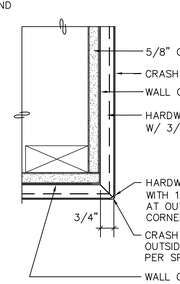

D6 TRIM DETAIL
3" = 1'-0"

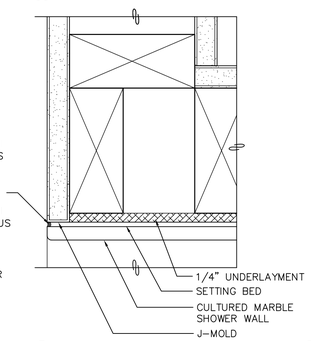

D7 SHOWER OPENING DETAIL
6" = 1'-0"

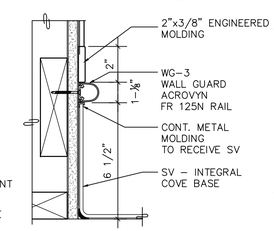

D8 HANDRAIL/ WAINSCOT @ CORRIDOR
3" = 1'-0"

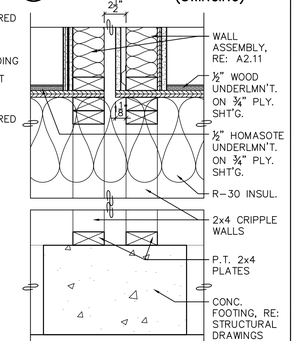

D9 LAUNDRY ROOM WALL
1 1/2" = 1'-0"

REVISIONS	DATE

REGISTERED ARCHITECT
RAYMOND J. KISTLER
3172
ASHLAND, OREGON
STATE OF OREGON

kistler + small + white architects

KISTLER SMALL WHITE, ARCHITECTS
552 A STREET
ASHLAND, OREGON 97520
P: 541-488-8200
F: 541-552-9512
www.kistlersmallwhite.com

DEPARTMENT OF VETERANS AFFAIRS

SOUTHERN OREGON REHABILITATION CENTER & CLINICS

8495 CRATER LAKE HIGHWAY
WHITE CITY, OREGON

DRAWING TITLE:

INTERIOR DETAILS

FULLY SPRINKLERED FACILITY

PROJECT TITLE
REPLACE DOM BLDG. 203

DRAWN BY:	DATE: 4 AUGUST 2014	DRAWING NO.: A10.3
CHECK BY:	VA PROJECT NO.: 692-339	DWG.52 OF 56

US DEPARTMENT OF VETERANS AFFAIRS

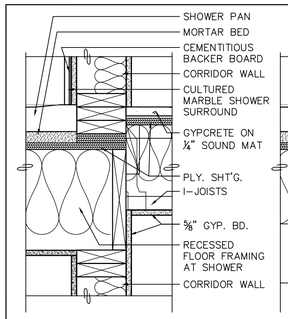

A1 SHOWER PAN AT SECOND FLOOR CORRIDOR WALL
1 1/2" = 1'-0"

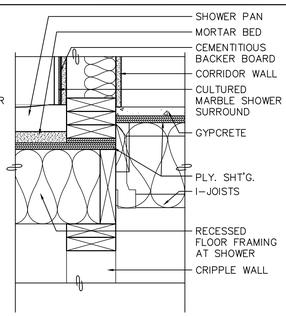

A2 SHOWER PAN AT FIRST FLOOR CORRIDOR WALL
1 1/2" = 1'-0"

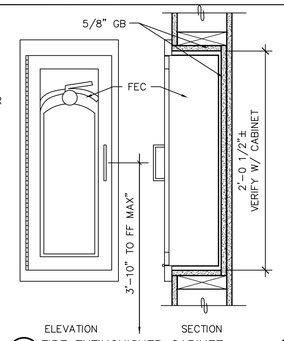

A3 FIRE EXTINGUISHER CABINET
1 1/2" = 1'-0"

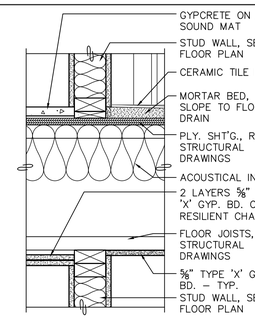

A4 SECOND FLOOR BATHROOM FLOOR
1 1/2" = 1'-0"

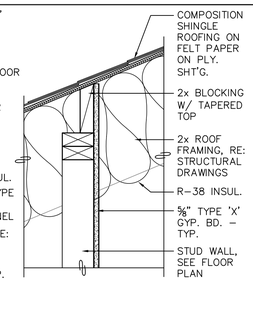

A5 CATWALK WALL AT FRAMED ROOF
1 1/2" = 1'-0"

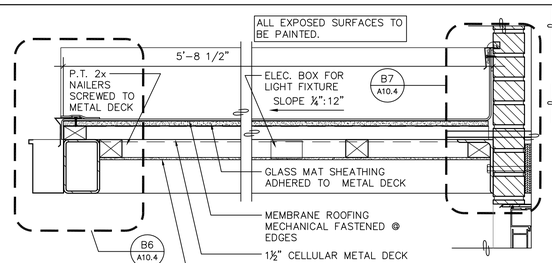

A6 CANOPY SECTION
1 1/2" = 1'-0"

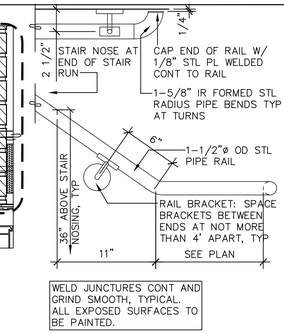

A8 STAIR HANDRAIL
1 1/2" = 1'-0"

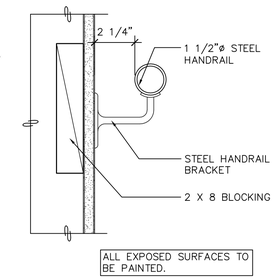

A9 STAIR HANDRAIL
3" = 1'-0"

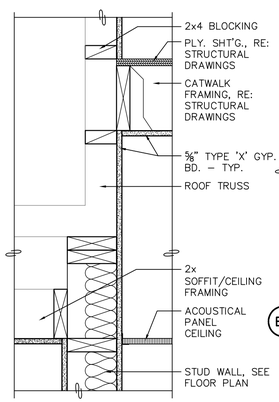

B1 TYPICAL TRUSS AND CATWALK SUPPORT FRAMING
1 1/2" = 1'-0"

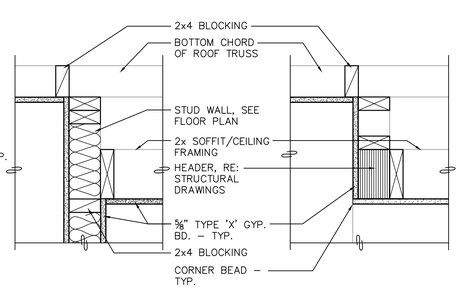

B2 SOFFIT FRAMING
1 1/2" = 1'-0"

B3 SOFFIT FRAMING
1 1/2" = 1'-0"

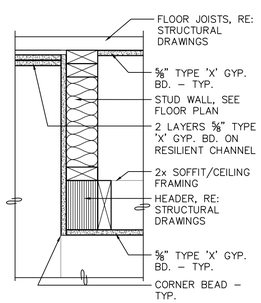

B4 SOFFIT FRAMING
1 1/2" = 1'-0"

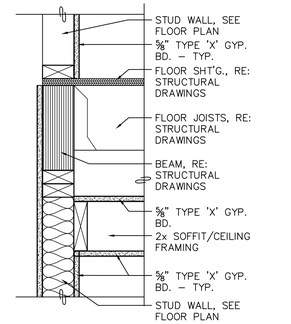

B5 CATWALK W/ FRAMED CEILING BELOW
1 1/2" = 1'-0"

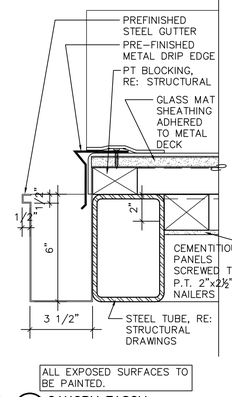

B6 CANOPY FASCIA
3" = 1'-0"

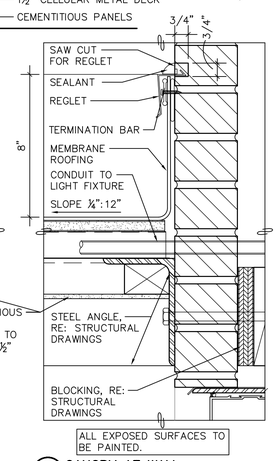

B7 CANOPY AT WALL
3" = 1'-0"

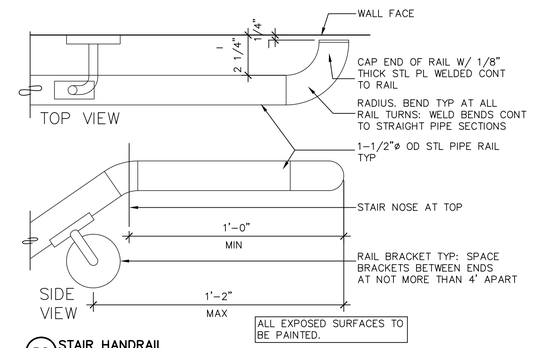

B8 STAIR HANDRAIL
3" = 1'-0"

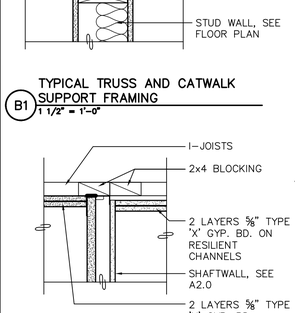

C1 TOP OF SHAFTWALL
1 1/2" = 1'-0"

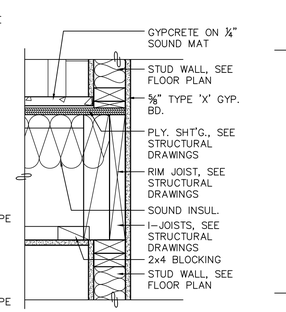

C2 SECOND FLOOR AT SHAFT
1 1/2" = 1'-0"

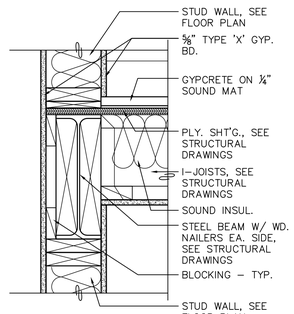

C3 SECOND FLOOR AT SHAFT
1 1/2" = 1'-0"

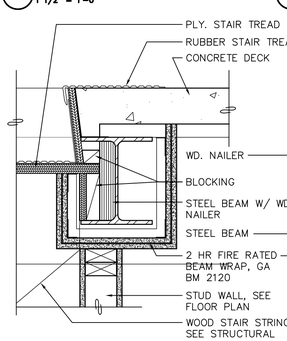

D1 TOP OF STAIR FRAMING
1 1/2" = 1'-0"

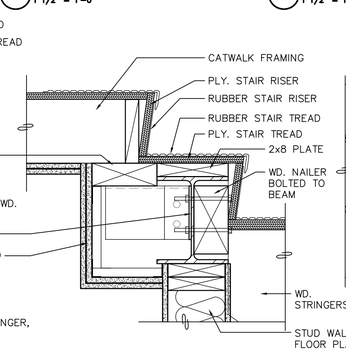

D2 TOP OF STAIR FRAMING
1 1/2" = 1'-0"

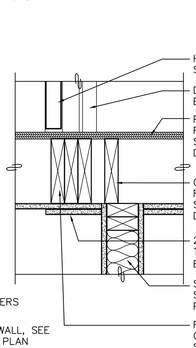

D3 CORRIDOR WALL AT CATWALK
1 1/2" = 1'-0"

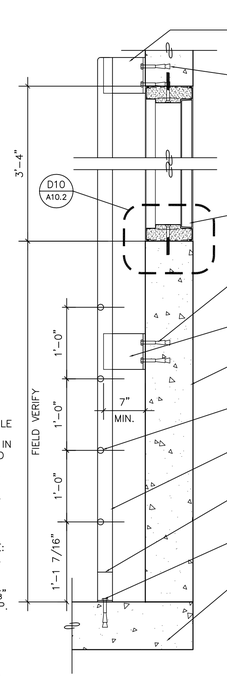

SECTION VIEW

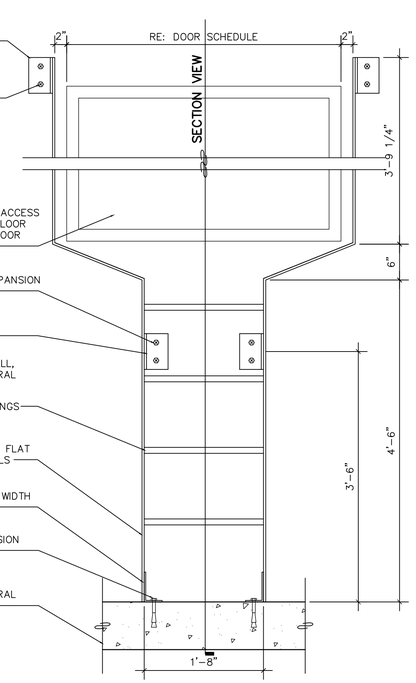

ELEVATION VIEW

D4 CRAWLSPACE ACCESS LADDER
1" = 1'-0"

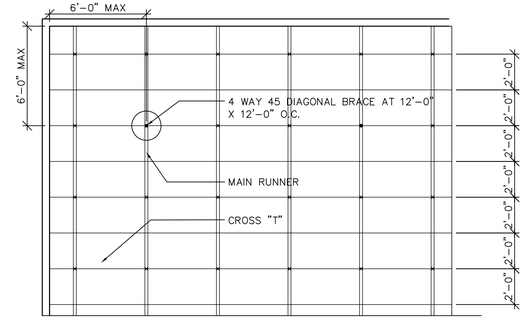

C7 SUSPENDED ACOUSTICAL CEILING GRID SUPPORT
1/4" = 1'-0"

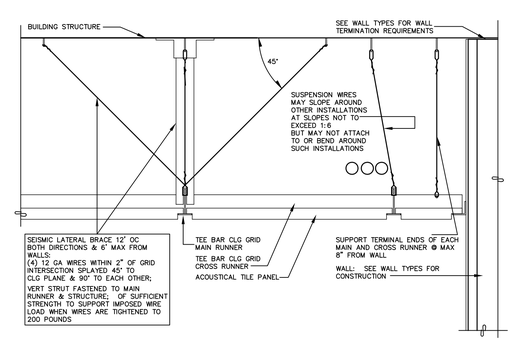

D7 SUSPENDED ACOUSTICAL CEILING GRID DETAIL
NO SCALE

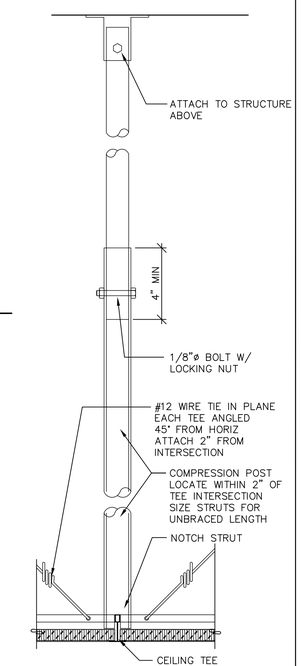

D9 CEILING COMPRESSION STRUT
3" = 1'-0"

REVISIONS	DATE

REGISTERED ARCHITECT
RAYMOND J. KISTLER
3172
ASHLAND, OREGON
STATE OF OREGON

kistler + small + white architects

KISTLER SMALL WHITE, ARCHITECTS
552 A STREET
ASHLAND, OREGON 97520
P: 541-488-8200
F: 541-552-9512
www.kistlersmallwhite.com

DEPARTMENT OF VETERANS AFFAIRS
SOUTHERN OREGON REHABILITATION CENTER & CLINICS
8495 CRATER LAKE HIGHWAY
WHITE CITY, OREGON

DRAWING TITLE:
MISCELLANEOUS DETAILS
FULLY SPRINKLERED FACILITY

PROJECT TITLE
REPLACE DOM BLDG. 203

DRAWN BY:	DATE: 4 AUGUST 2014	DRAWING NO.: A10.4
CHECK BY:	VA PROJECT NO.: 692-339	DWG.53OF 56

US DEPARTMENT OF VETERANS AFFAIRS

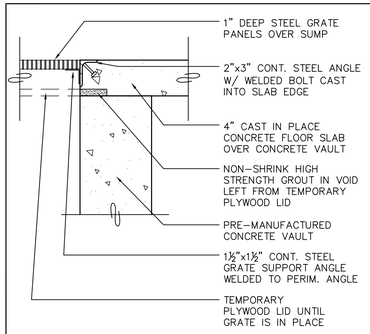

A1 SUMP GRATE
1 1/2" = 1'-0"

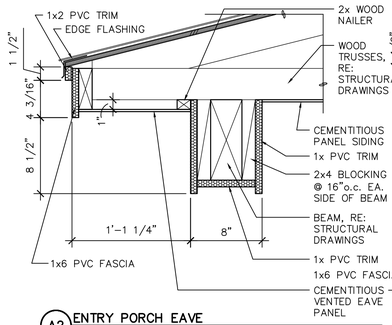

A2 ENTRY PORCH EAVE
1 1/2" = 1'-0"

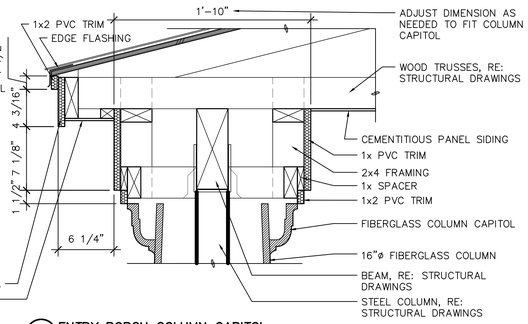

A3 ENTRY PORCH COLUMN CAPITOL
1 1/2" = 1'-0"

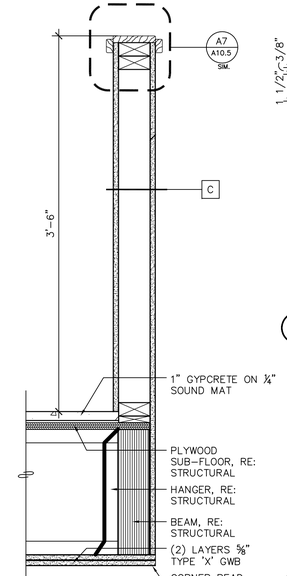

B5 LOW WALL AT STAIR
1 1/2" = 1'-0"

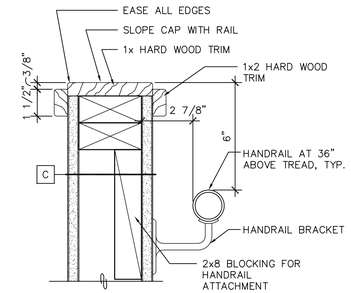

A7 STAIR WALL CAP & HANDRAIL
3" = 1'-0"

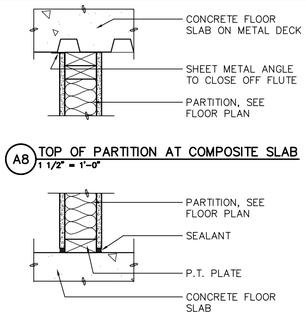

A8 TOP OF PARTITION AT COMPOSITE SLAB
1 1/2" = 1'-0"

A9 BOTTOM OF PARTITION AT CONCRETE SLAB
1 1/2" = 1'-0"

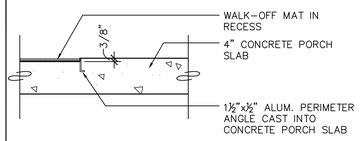

B1 EXTERIOR WALK-OFF MAT EDGE
1 1/2" = 1'-0"

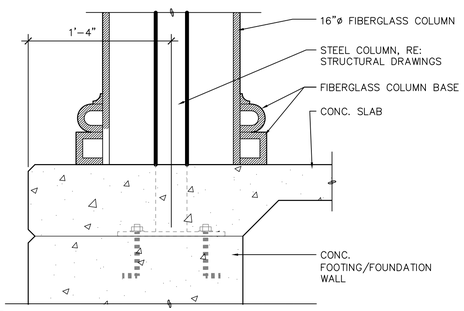

B3 ENTRY PORCH COLUMN BASE
1 1/2" = 1'-0"

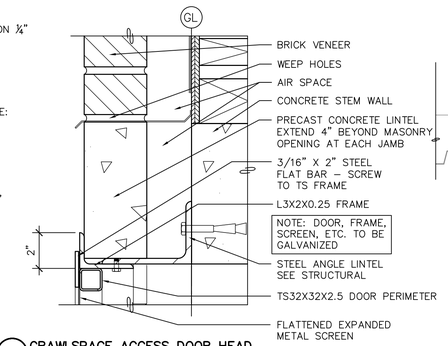

B7 CRAWLSPACE ACCESS DOOR HEAD
3" = 1'-0"

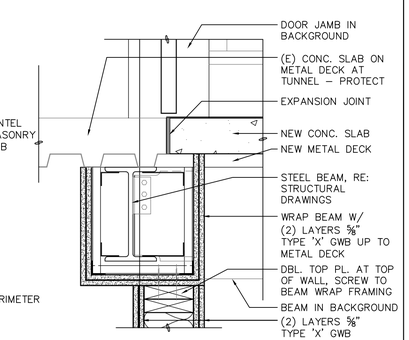

B8 FIRST FLOOR CROSS CORRIDOR TIE-IN
1 1/2" = 1'-0"

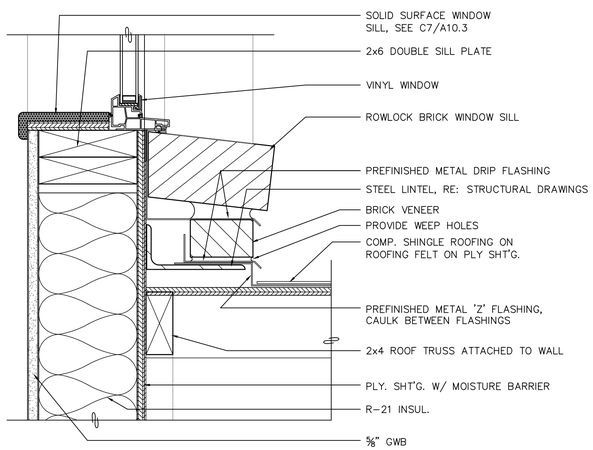

C1 WIDOW SILL AT PORCH ROOF
3" = 1'-0"

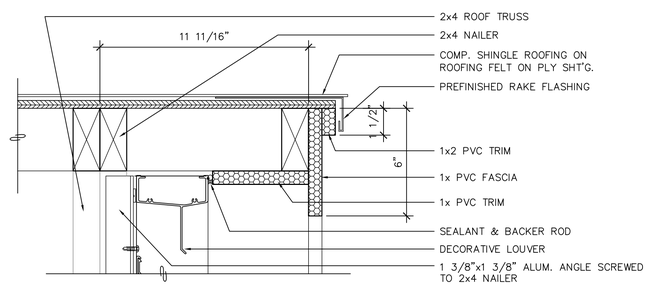

C2 RAKE AT PORCH GABLE END
3" = 1'-0"

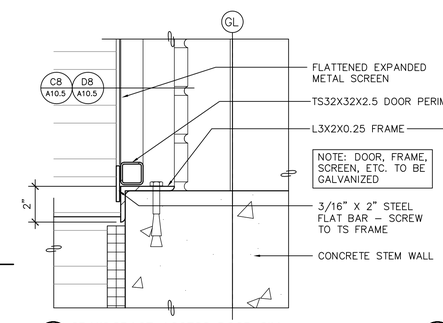

C7 CRAWLSPACE ACCESS DOOR SILL
3" = 1'-0"

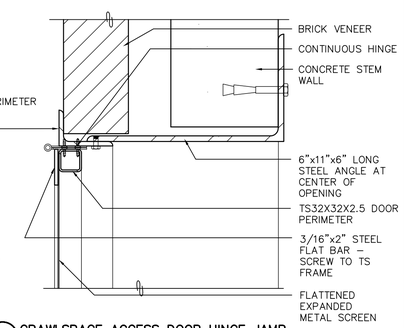

C8 CRAWLSPACE ACCESS DOOR HINGE JAMB
3" = 1'-0"

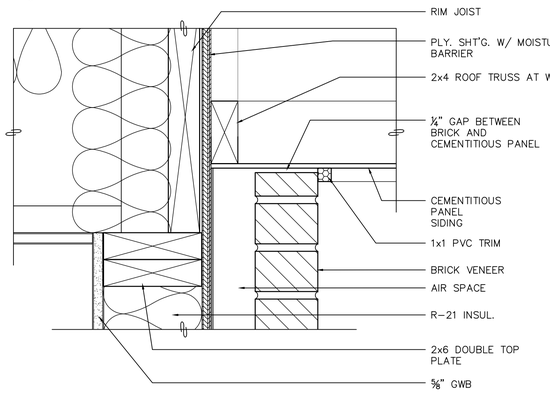

D1 PORCH CEILING AT BRICK VENEER
3" = 1'-0"

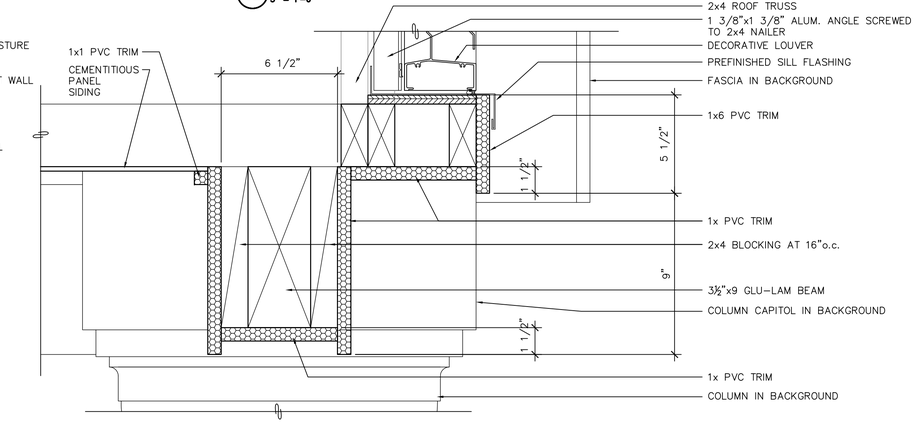

D2 PORCH CEILING AT GABLE
3" = 1'-0"

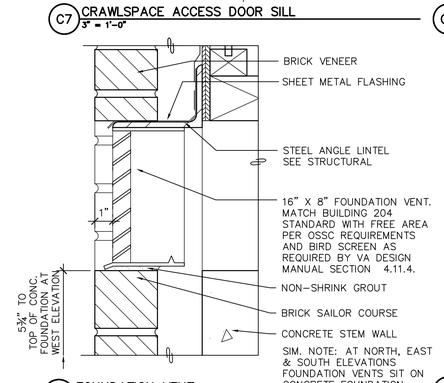

D7 FOUNDATION VENT
3" = 1'-0"

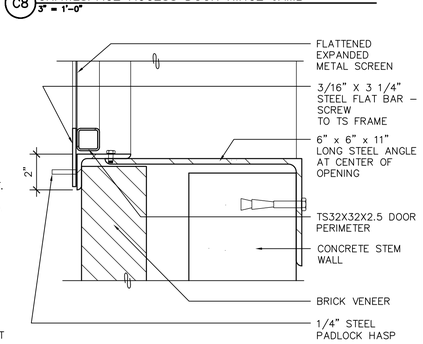

D8 CRAWLSPACE ACCESS DOOR STRIKE JAMB
3" = 1'-0"

REVISIONS	DATE

REGISTERED ARCHITECT
RAYMOND J. KISTLER
3172
ASHLAND, OREGON
STATE OF OREGON

kistler + small + white architects

KISTLER SMALL WHITE, ARCHITECTS
552 A STREET
ASHLAND, OREGON 97520
P: 541-488-6200
F: 541-552-9512
www.kistlersmallwhite.com

DEPARTMENT OF VETERANS AFFAIRS

SOUTHERN OREGON REHABILITATION CENTER & CLINICS

8495 CRATER LAKE HIGHWAY
WHITE CITY, OREGON

DRAWING TITLE:

MISCELLANEOUS DETAILS

FULLY SPRINKLERED FACILITY

PROJECT TITLE
REPLACE DOM BLDG. 203

DRAWN BY:	DATE: 4 AUGUST 2014	DRAWING NO.: A10.5
CHECK BY:	VA PROJECT NO.: 692-339	DWG.54 OF 56

US DEPARTMENT OF VETERANS AFFAIRS

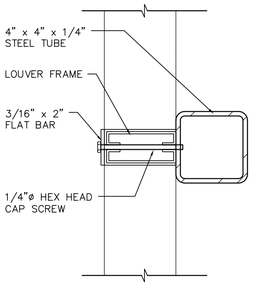

A1 LOUVER AT STEEL TUBE POST
3" = 1'-0"

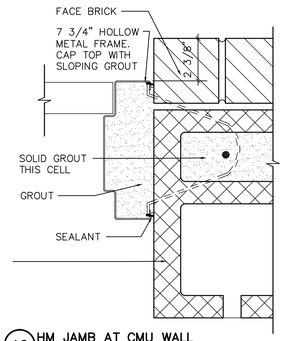

A2 HM JAMB AT CMU WALL
3" = 1'-0"

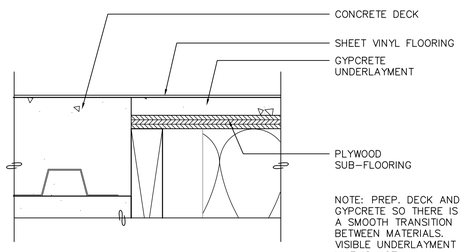

B1 SHEET VINYL OVER SUB-MATERIAL CHANGE
3" = 1'-0"

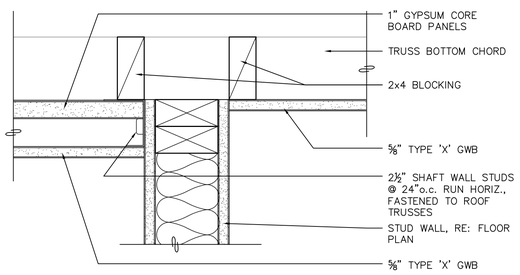

C1 TOP OF CHASE AT TRUSSES
3" = 1'-0"

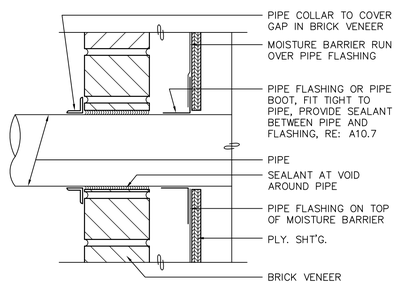

C3 PIPE PENETRATION AT BRICK VENEER WALL
3" = 1'-0"

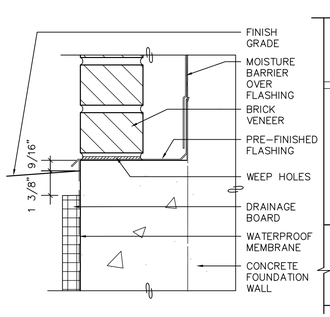

D1 TYPICAL FINISH GRADE AT EXTERIOR WALL
3" = 1'-0"

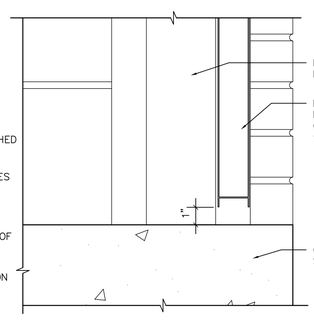

D2 HM DOOR THRESHOLD
3" = 1'-0"

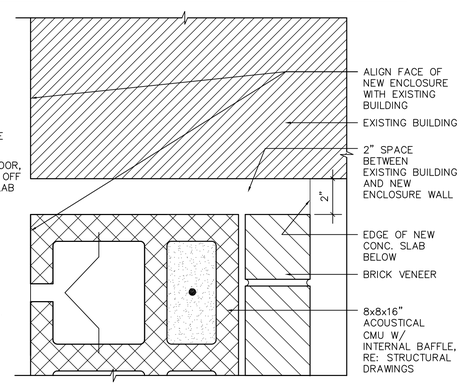

D3 NEW ENCLOSURE AT EXISTING BUILDING
3" = 1'-0"

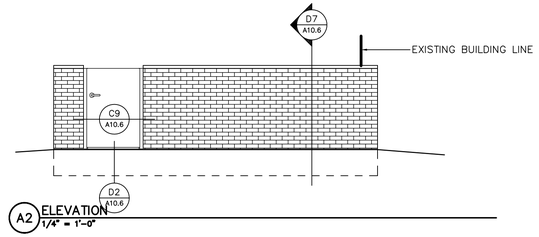

A2 ELEVATION
1/4" = 1'-0"

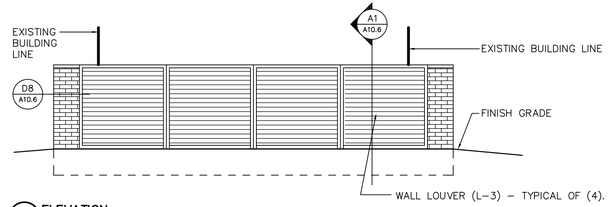

B2 ELEVATION
1/4" = 1'-0"

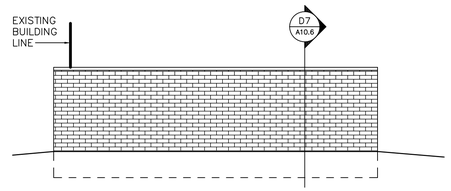

B3 ELEVATION
1/4" = 1'-0"

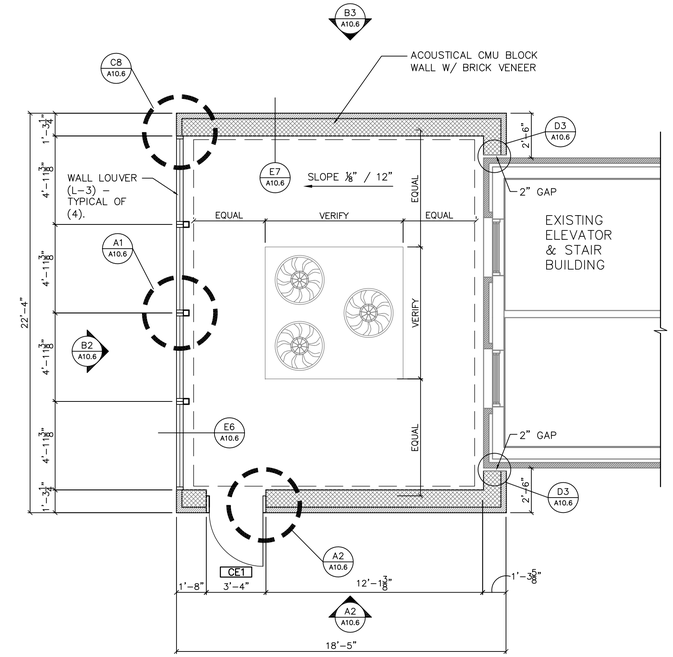

B7 PLAN
1/4" = 1'-0"

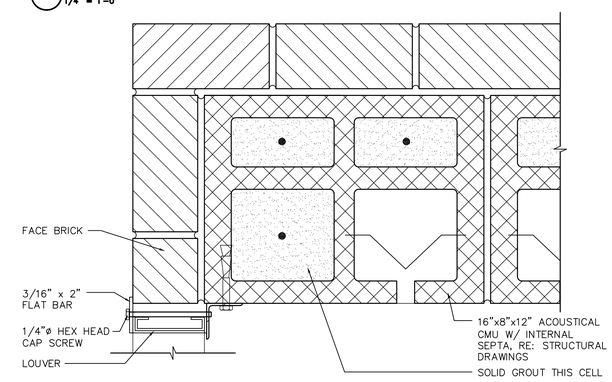

C8 LOUVER AT CMU WALL
3" = 1'-0"

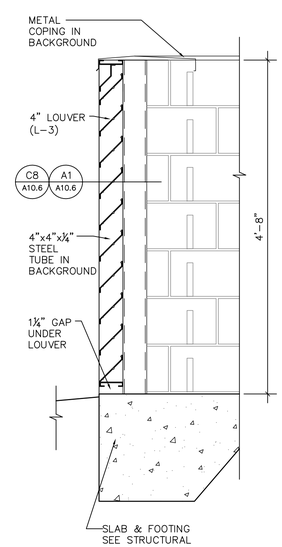

D6 MECHANICAL SCREEN
1" = 1'-0"

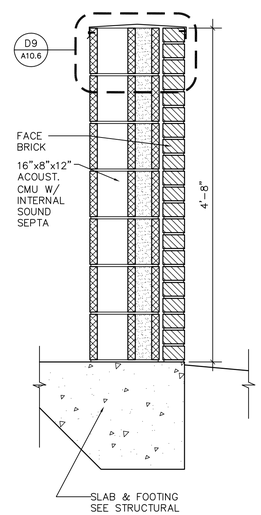

D7 MECHANICAL SCREEN
1" = 1'-0"

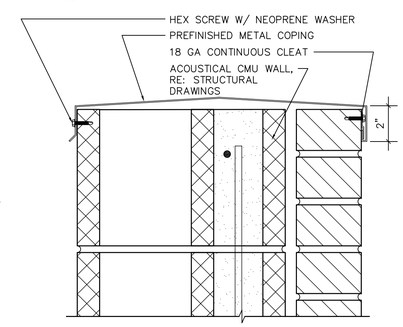

D9 MASONRY SCREEN WALL COPING
3" = 1'-0"

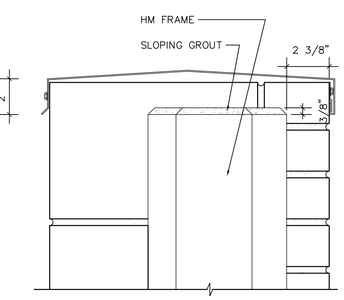

D10 HM JAMB ELEVATION
3" = 1'-0"

REVISIONS	DATE

REGISTERED ARCHITECT
RAYMOND J. KISTLER
3172
ASHLAND, OREGON
STATE OF OREGON

kistler + small + white architects

KISTLER SMALL WHITE, ARCHITECTS
552 A STREET
ASHLAND, OREGON 97520
P: 541-488-8200
F: 541-552-9512
www.kistlersmallwhite.com

DEPARTMENT OF VETERANS AFFAIRS

SOUTHERN OREGON REHABILITATION CENTER & CLINICS

8495 CRATER LAKE HIGHWAY
WHITE CITY, OREGON

DRAWING TITLE:

MISCELLANEOUS DETAILS

FULLY SPRINKLERED FACILITY

PROJECT TITLE
REPLACE DOM BLDG. 203

DRAWN BY:	DATE: 4 AUGUST 2014	DRAWING NO.: A10.6
CHECK BY:	VA PROJECT NO.: 692-339	DWG.55 OF 56

US DEPARTMENT OF VETERANS AFFAIRS

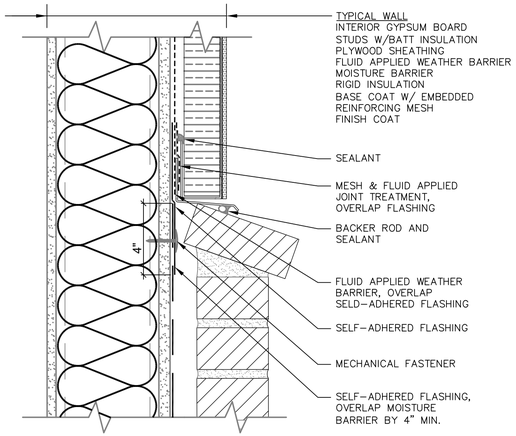

FLUID APPLIED TO WRAP TRANSITION

EIFS / BRICK VENEER / STEEL STUD WALL

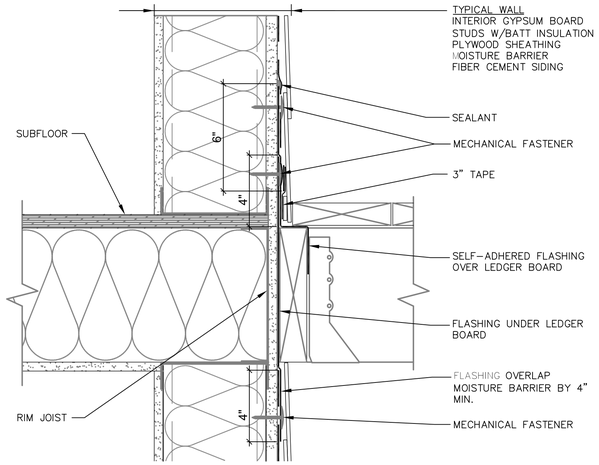

SECOND STORY DECK LEDGER BOARD DETAIL

FIBER CEMENT SIDING / STEEL STUD WALL

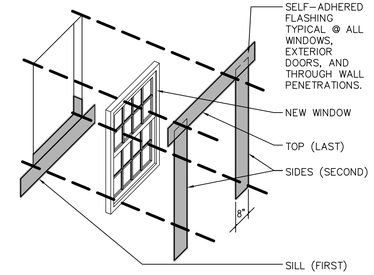

NOTE: MOISTURE BARRIER TO BE RUN ON FACE OF WINDOW FLANGE AT HEAD AND JAMBS AND UNDER WINDOW FLANGE AT SILL.

WIMDOW FLASHING

GENERAL NOTES:

- SEAL ALL WEATHER BARRIER SEAMS AND REPAIR MINOR HOLES WITH APPROVED TAPE.
- FASTEN WEATHER BARRIER WITH APPROVED FASTENERS AND SPACING.
- INTERIOR VAPOR RETARDER MAY BE REQUIRED IN SOME REGIONS.
- LOCAL LAWS, ZONING, AND BUILDING CODES VARY AND THEREFORE GOVERN OVER MATERIAL SELECTION AND DETAILING SHOWN ABOVE.
- EXTERIOR INSULATION MAY BE APPLIED IN FRONT OR BEHIND WEATHER BARRIER LAYER.
- DETAILS SHOWN ARE FOR WEATHER BARRIER ONLY AND ARE TYPICAL IN NATURE. SEE ACTUAL BUILDING DETAILS FOR EXACT CONSTRUCTION MATERIALS AND DIMENSIONS.

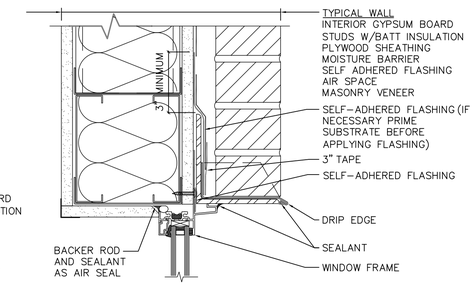

BRICK - FLANGED WINDOW HEAD

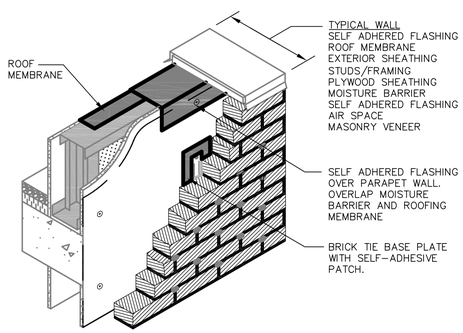

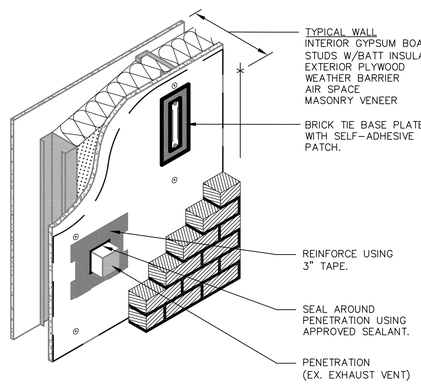

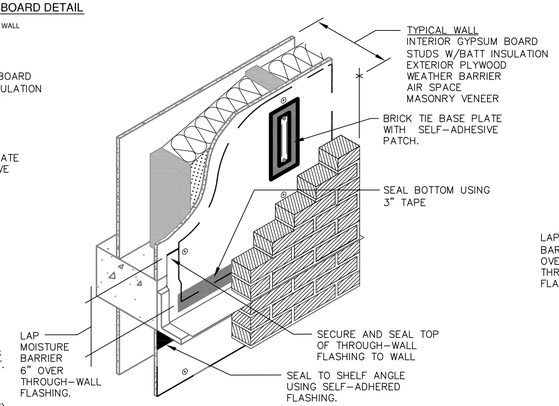

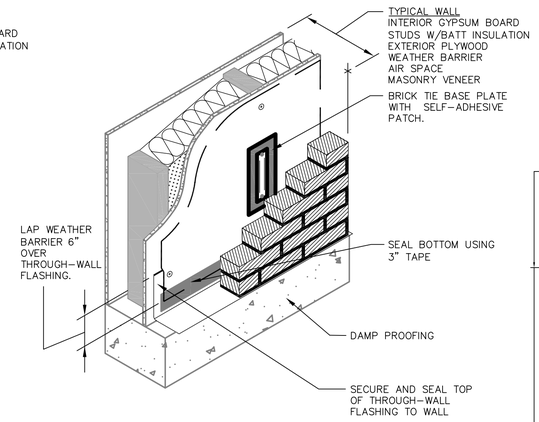

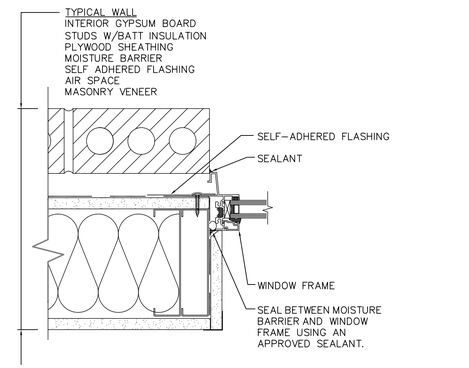

BRICK - FLANGED WINDOW JAMB

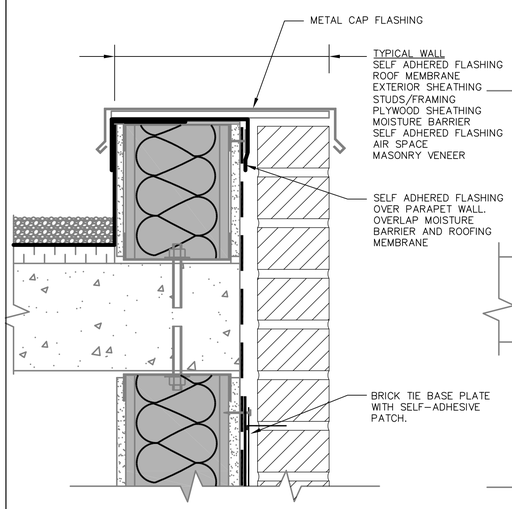

BRICK - PARAPET WALL

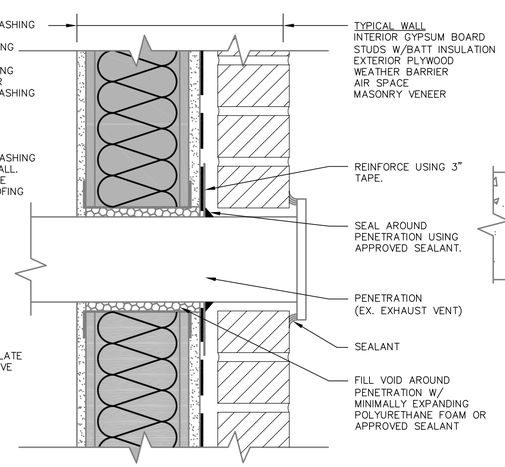

BRICK - WALL PENETRATION

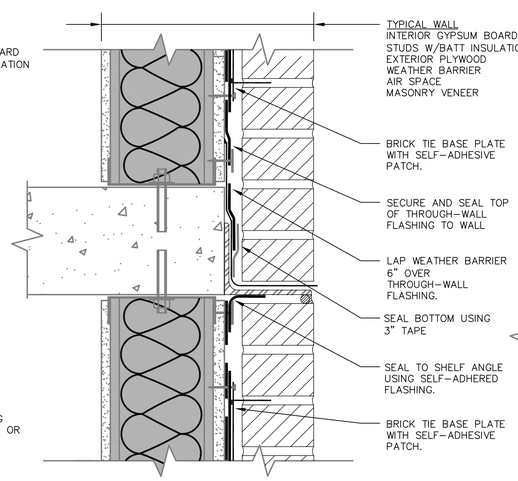

BRICK - SHELF ANGLE

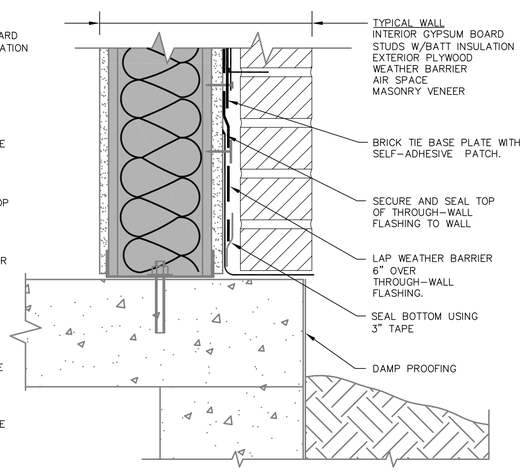

BRICK - BASE OF WALL

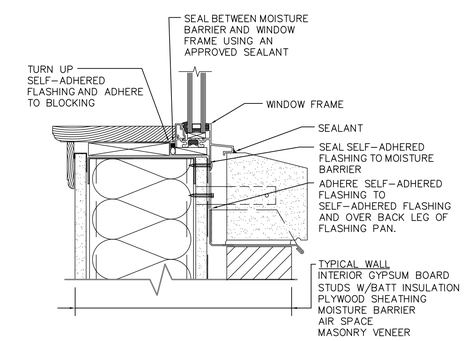

BRICK - FLANGED WINDOW SILL

REVISIONS	DATE

REGISTERED ARCHITECT
RAYMOND J. KISTLER
3172
ASHLAND, OREGON
STATE OF OREGON

kistler + small + white architects

KISTLER SMALL WHITE, ARCHITECTS
552 A STREET
ASHLAND, OREGON 97520
P: 541-488-8200
F: 541-552-9512
www.kistlersmallwhite.com

DEPARTMENT OF VETERANS AFFAIRS

SOUTHERN OREGON REHABILITATION CENTER & CLINICS

8495 CRATER LAKE HIGHWAY
WHITE CITY, OREGON

DRAWING TITLE:

WEATHER BARRIER DETAIL SHEET

FULLY SPRINKLERED FACILITY

PROJECT TITLE
REPLACE DOM BLDG. 203

DRAWN BY:	DATE: 4 AUGUST 2014	DRAWING NO.: A10.7
CHECK BY:	VA PROJECT NO.: 692-339	DWG.56 OF 56

US DEPARTMENT OF VETERANS AFFAIRS

NOTES

1. COORDINATE REQUIREMENTS WITH SHEET VINYL AND VINYL TILE MANUFACTURERS FOR APPRORIATE SEAMING @ SUB-FLOOR MATERIALS TRANSITION.
2. COORDINATE CERAMIC TILE INSTALLATION WITH CHANGE IN SUB-FLOOR MATERIALS TRANSITION.
3. RE: A2.12 FOR BATHROOM FLOOR SLOPE
4. VT-2, VT-3 TO BE INSTALLED IN A DIAGONAL STACK PATTERN
5. RECESSED WALK-OFF MAT

FLOOR FINISHES LEGEND

VINYL TILE (WELDED SEAMS AT TRANSITIONS W/RUBBER BASE), WOOD PATTERN	(VT-1)
VINYL TILE (WELDED SEAMS AT TRANSITIONS W/RUBBER BASE)	(VT-2)
VINYL TILE (WELDED SEAMS AT TRANSITIONS W/RUBBER BASE)	(VT-3)
SHEET VINYL (WELDED SEAMS – INTEGRAL COVE BASE IN CONNECTING CORRIDORS ONLY)	(WSF-1)
SHEET VINYL (WELDED SEAMS – INTEGRAL COVE BASE IN CONNECTING CORRIDORS ONLY)	(WSF-2A)
SHEET VINYL (WELDED SEAMS W/INTEGRAL COVE BASE)	(WSF-2B)
SHEET VINYL (WELDED SEAMS W/ INTEGRAL COVE BASE)	(WSF-2C)
CERAMIC TILE	(CT)
RESILIENT STAIR TREADS, RISERS AND SKIRTING	(RST)
W/ MATCHING 12X12 RUBBER TILES ON INTERMEDIATE LANDINGS	(RT)
ENTRYWAY SYSTEM (LINES INDICATE DIRECTION OF THE GRID)	(ES)

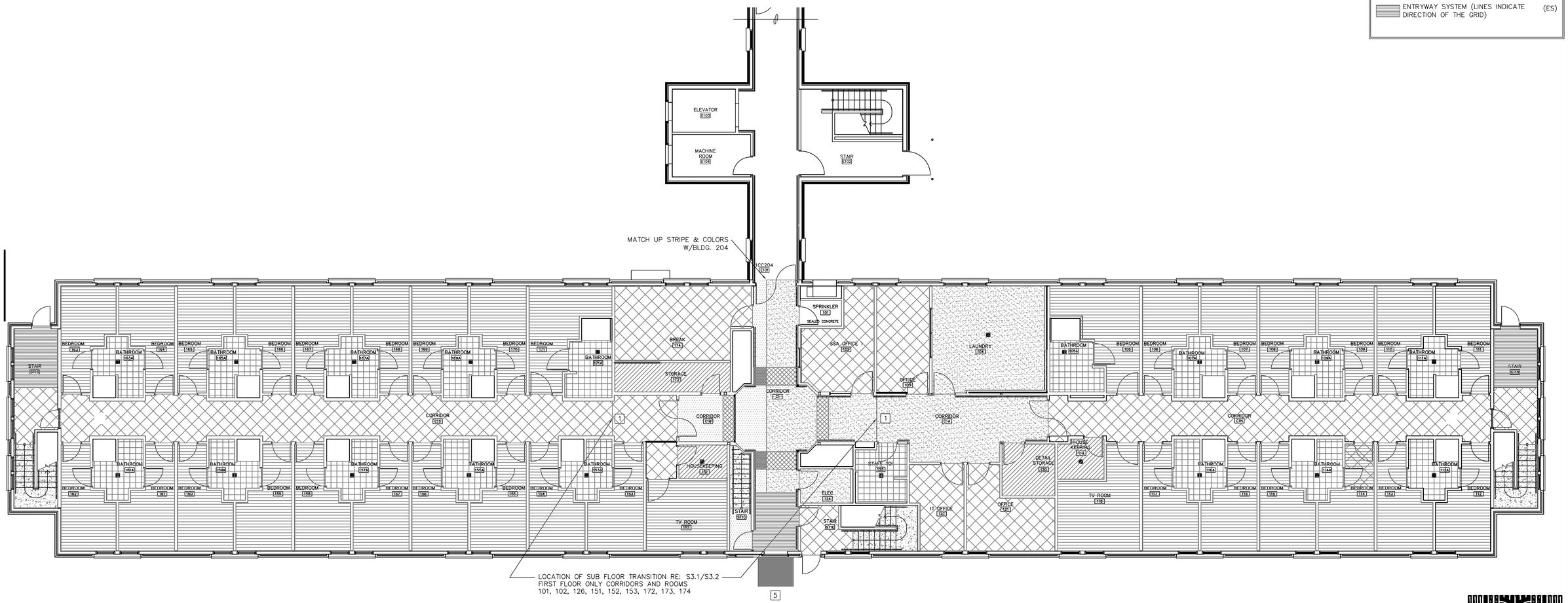

F1.1 FLOOR FINISHES PLAN
1/8" = 1'-0"
0 4' 8' 16'
SCALE: 1/8" = 1'-0"

bloom design INTERIORS
541.944.5533 552 A Street Ashland, OR 97520

REVISIONS	DATE

REGISTERED ARCHITECT RAYMOND J. KISTLER ASHLAND, OREGON STATE OF OREGON

kistler+ small +white architects

KISTLER SMALL WHITE, ARCHITECTS
552 A STREET
ASHLAND, OREGON 97520
P: 541-488-8200
F: 541-552-9512
www.kistlersmallwhite.com

DEPARTMENT OF VETERANS AFFAIRS
SOUTHERN OREGON REHABILITATION CENTER & CLINICS
8495 CRATER LAKE HIGHWAY
WHITE CITY, OREGON

DRAWING TITLE:
FIRST FLOOR PLAN
FLOOR FINISHES

FULLY SPRINKLERED FACILITY

PROJECT TITLE
REPLACE DOM BLDG. 203

DRAWN BY:	DATE: 4 AUGUST 2014	DRAWING NO.: F1.1
CHECK BY:	VA PROJECT NO.: 692-339	DWG.1 OF 4

US DEPARTMENT OF VETERANS AFFAIRS

NOTES

1. COORDINATE REQUIREMENTS WITH SHEET VINYL AND VINYL TILE MANUFACTURERS FOR APPRORIATE SEAMING @ SUB-FLOOR MATERIALS TRANSITION.
2. COORDINATE CERAMIC TILE INSTALLATION WITH CHANGE IN SUB-FLOOR MATERIALS TRANSITION.
3. RE: A2.12 FOR BATHROOM FLOOR SLOPE
4. VT-2, VT-3 TO BE INSTALLED IN A DIAGONAL STACK PATTERN

FLOOR FINISHES LEGEND

VINYL TILE (WELDED SEAMS AT TRANSITIONS W/RUBBER BASE), WOOD PATTERN	(VT-1)
VINYL TILE (WELDED SEAMS AT TRANSITIONS W/RUBBER BASE)	(VT-2)
VINYL TILE (WELDED SEAMS AT TRANSITIONS W/RUBBER BASE)	(VT-3)
SHEET VINYL (WELDED SEAMS – INTEGRAL COVE BASE IN CONNECTING CORRIDORS ONLY)	(WSF-1)
SHEET VINYL (WELDED SEAMS – INTEGRAL COVE BASE IN CONNECTING CORRIDORS ONLY)	(WSF-2A)
SHEET VINYL (WELDED SEAMS W/INTEGRAL COVE BASE)	(WSF-2B)
SHEET VINYL (WELDED SEAMS W/ INTEGRAL COVE BASE)	(WSF-2C)
CERAMIC TILE	(CT)
RESILIENT STAIR TREADS, RISERS AND SKIRTING	(RST)
W/ MATCHING 12X12 RUBBER TILES ON INTERMEDIATE LANDINGS	(RT)
ENTRYWAY SYSTEM (LINES INDICATE DIRECTION OF THE GRID)	(ES)

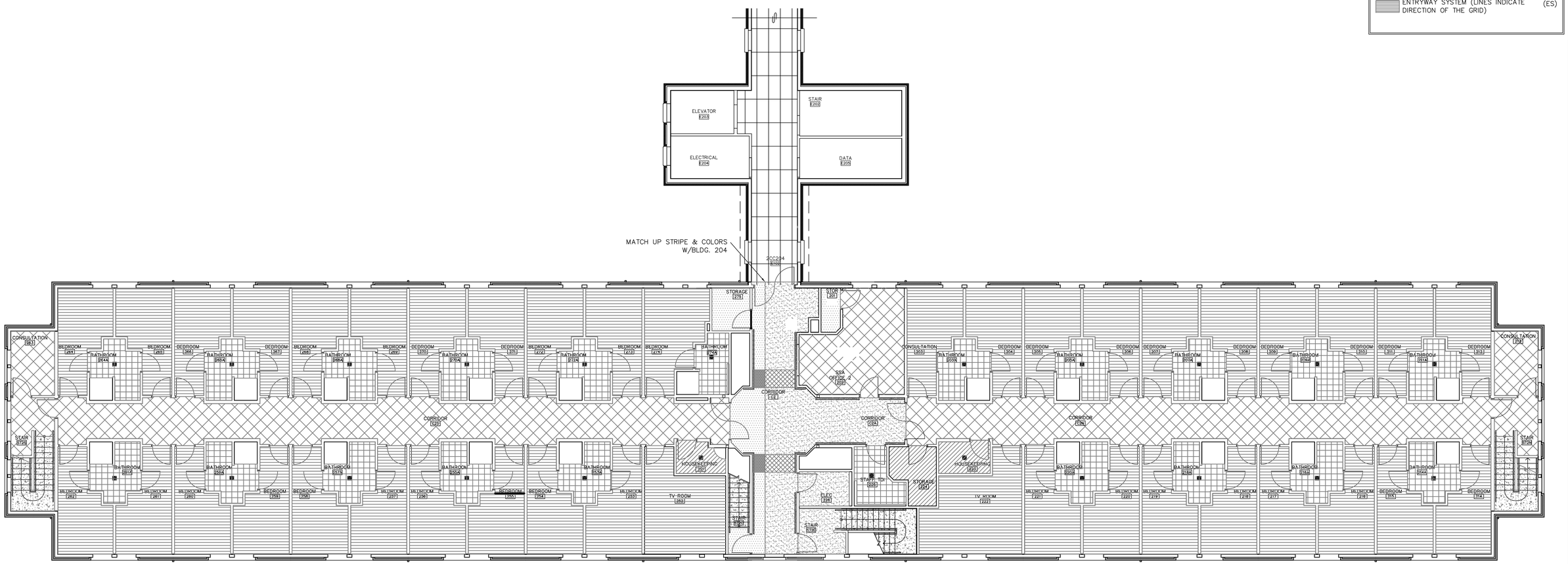

F1.2 FLOOR FINISHES PLAN
1/8" = 1'-0"
0 4' 8' 16'
SCALE: 1/8" = 1'-0"

bloom design
INTERIORS
541.944.5533 552 A Street Ashland, OR 97520

REVISIONS	DATE

REGISTERED ARCHITECT RAYMOND J. KISTLER STATE OF OREGON

kistler+ small +white architects

KISTLER SMALL WHITE, ARCHITECTS
552 A STREET
ASHLAND, OREGON 97520
P: 541-488-8200
F: 541-552-9512
www.kistlersmallwhite.com

DEPARTMENT OF VETERANS AFFAIRS
SOUTHERN OREGON REHABILITATION CENTER & CLINICS
8495 CRATER LAKE HIGHWAY
WHITE CITY, OREGON

DRAWING TITLE:
SECOND FLOOR PLAN
FLOOR FINISHES
FULLY SPRINKLERED FACILITY

PROJECT TITLE
REPLACE DOM BLDG. 203

DRAWN BY:	DATE: 4 AUGUST 2014	DRAWING NO.: F1.2
CHECK BY:	VA PROJECT NO.: 692-339	DWG. 2 OF 4

US DEPARTMENT OF VETERANS AFFAIRS

WALL FINISHES LEGEND

CG-1	3"X3"X36" OR 48" 90^ CORNER GUARD (FIELD CUT TO FIT FROM FINISHED FLOOR TO HEIGHT AS INDICATED ON ELEVATIONS)
CG-2	1\"X 1\" TAPE-ON CORNER GUARD – TRIM IN FIELD
P	PAINT – SEE SECTION 09 06 00 "SCHEDULE FOR FINISHES" FOR COLOR AND GLOSS LEVEL
HR	ROUND STAINLESS STEEL HANDRAIL W/ ATTACHED CRASH RAIL – TOTAL HEIGHT 6"
WC-1	VINYL-COATED FABRIC WALL COVERING
WC-2A	VINYL-COATED FABRIC WALL COVERING – COLOR A
WC-2B	VINYL-COATED FABRIC WALL COVERING – COLOR B
WC-2C	VINYL-COATED FABRIC WALL COVERING – COLOR C
WC-2D	VINYL-COATED FABRIC WAL COVERING – COLOR D
WG-1	4" RIGID CRASH RAIL WITH CUSTOM HARDWOOD TRIM ABOVE
WG-2	4" RIGID CRASH RAIL WITH VINYL COVER ALIGN BOTTOM OF CRASH RAIL W/LOWER EDGE OF WINDOW SILL @ T.V. ROOMS
WG-3	1 ⅛" IMPACT RESISTANT BUMPER RAIL
FRP	FIBERGLASS REINFORCED PLASTIC PANELS TO 48" A.F.F.
RSWS	RIGID SHEET WALL COVERING SYSTEM AS WAINSCOT
WT-1	CROWN MOLDING WOOD TRIM

NOTES

1. TYPICAL CONDITION FOR RESIDENTIAL CORRIDORS
   - –WG-1 @ 3'-6" AS A CHAIR RAIL
   - –WC-1 BELOW CHAIR RAIL
   - –P-1 ABOVE CHAIR RAIL
   - –WT-1 @ TOP OF WALL
   - –CG-2 @ EACH CORNER (FIELD CUT TO FIT FROM UNDERSIDE OF CHAIR RAIL TO WG-3
   - –WG-3 ABOVE 4" RB
2. WC-2 @ ALL RESIDENT ENTRIES. SEE SECTION 09 06 00 "SCHEDULE FOR FINISHES" FOR LIST OF COLORS
3. SEE SECTION 09 06 00 "SCHEDULE FOR FINISHES" FOR PAINT COLORS IN THESE ROOMS
4. TYPICAL CONDITION FOR CONNECTING CORRIDORS
   - –HR @ 2'-10' A.F.F.
   - –RSWS BELOW HANDRAIL
   - –P-7 ABOVE HANDRAIL
   - –WG-3 @ TOP OF INTEGRAL COVE BASE
5. TYPICAL CONDITION WHERE NO HANDRAIL OCCURS
   - –RSWS WITH P-7 ABOVE
   - –WG-2 ABOVE RWSW @ SAME HEIGHT AS INTEGRAL CRASH RAIL OF HR (NO HAND RAIL)

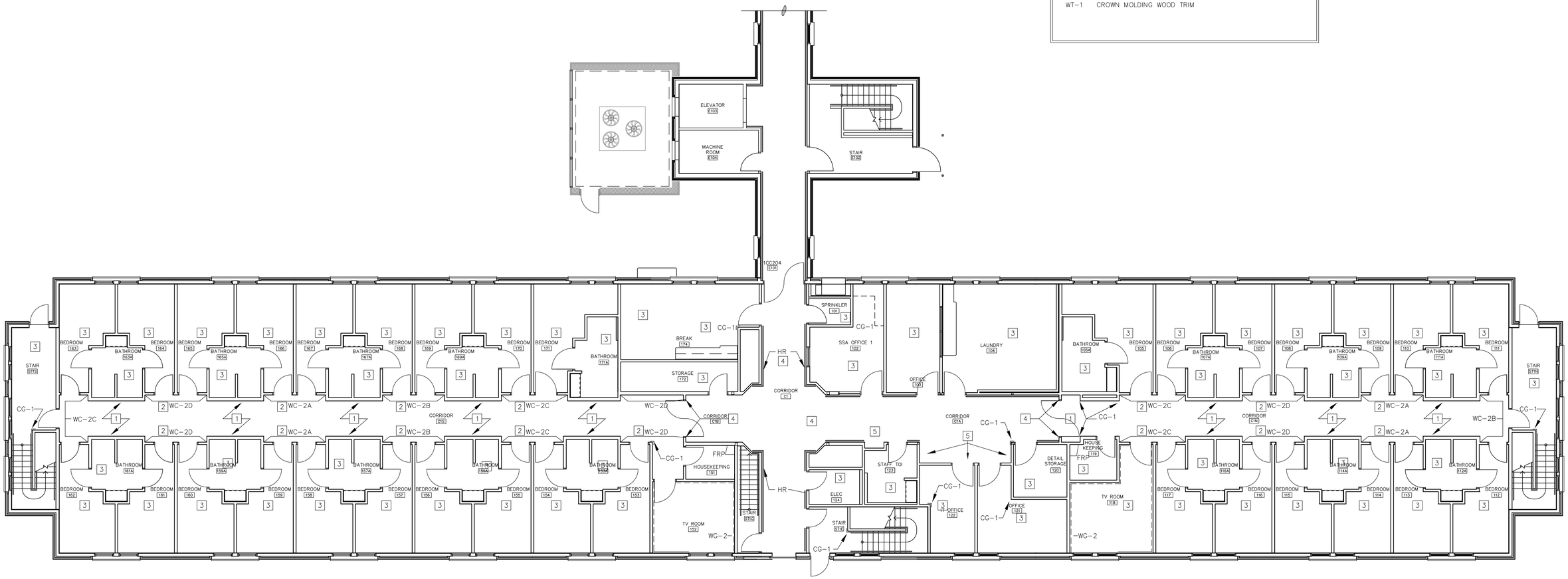

WALL FINISHES PLAN

1/8" = 1'-0"

0 4' 8' 16'

SCALE: 1/8" = 1'-0"

bloom design INTERIORS

541.944.5533 552 A Street Ashland, OR 97520

REVISIONS	DATE

REGISTERED ARCHITECT RAYMOND J. KISTLER 3172 ASHLAND, OREGON STATE OF OREGON

kistler + small + white architects

KISTLER SMALL WHITE, ARCHITECTS
552 A STREET
ASHLAND, OREGON 97520
P: 541-488-8200
F: 541-552-9512
www.kistlersmallwhite.com

DEPARTMENT OF VETERANS AFFAIRS

SOUTHERN OREGON REHABILITATION CENTER & CLINICS

8495 CRATER LAKE HIGHWAY
WHITE CITY, OREGON

DRAWING TITLE:

FIRST FLOOR PLAN
WALL FINISHES

FULLY SPRINKLERED FACILITY

PROJECT TITLE
REPLACE DOM BLDG. 203

DRAWN BY:	DATE: 4 AUGUST 2014	DRAWING NO.: F2.1
CHECK BY:	VA PROJECT NO.: 692-339	DWG. 3 OF 4

US DEPARTMENT OF VETERANS AFFAIRS

WALL FINISHES LEGEND

CG–1	3"X3"X36" OR 48" 90^ CORNER GUARD (FIELD CUT TO FIT FROM FINISHED FLOOR TO HEIGHT AS INDICATED ON ELEVATIONS)
CG–2	1\"X 1\" TAPE–ON CORNER GUARD – TRIM IN FIELD
P	PAINT – SEE SECTION 09 06 00 "SCHEDULE FOR FINISHES" FOR COLOR AND GLOSS LEVEL
HR	ROUND STAINLESS STEEL HANDRAIL W/ ATTACHED CRASH RAIL – TOTAL HEIGHT 6"
WC–1	VINYL–COATED FABRIC WALL COVERING
WC–2A	VINYL–COATED FABRIC WALL COVERING – COLOR A
WC–2B	VINYL–COATED FABRIC WALL COVERING – COLOR B
WC–2C	VINYL–COATED FABRIC WALL COVERING – COLOR C
WC–2D	VINYL–COATED FABRIC WALL COVERING – COLOR D
WG–1	4" RIGID CRASH RAIL WITH CUSTOM HARDWOOD TRIM ABOVE
WG–2	4" RIGID CRASH RAIL WITH VINYL COVER ALIGN BOTTOM OF CRASH RAIL W/LOWER EDGE OF WINDOW SILL @ T.V. ROOMS
WG–3	1⅛ " IMPACT RESISTANT BUMPER RAIL
FRP	FIBERGLASS REINFORCED PLASTIC PANELS TO 48" A.F.F.
RSWS	RIGID SHEET WALL COVERING SYSTEM AS WAINSCOT
WT–1	CROWN MOLDING WOOD TRIM

NOTES

1. TYPICAL CONDITION – SEE ELEVATIONS A4.4
   - –WG–1 @ 3'–6" AS A CHAIR RAIL
   - –WC–1 BELOW CHAIR RAIL
   - –P–1 ABOVE CHAIR RAIL
   - –WT–1 @ TOP OF WALL
   - –CG–2 @ EACH CORNER (FIELD CUT TO FIT FROM UNDERSIDE OF CHAIR RAIL TO WG–3
   - –WG–3 ABOVE 4" RB
2. WC–2 @ ALL RESIDENT ENTRIES. SEE SECTION 09 06 00 "SCHEDULE FOR FINISHES" FOR LIST OF COLORS
3. SEE SECTION 09 06 00 "SCHEDULE FOR FINISHES" FOR PAINT COLORS IN THESE ROOMS
4. TYPICAL CONDITION FOR CONNECTING CORRIDORS
   - –HR @ 2'–10' A.F.F.
   - –RSWS BELOW HANDRAIL
   - –P–7 ABOVE HANDRAIL
   - –WG–3 @ TOP OF INTEGRAL COVE BASE
5. TYPICAL CONDITION WHERE NO HANDRAIL OCCURS
   - –RSWS WITH P–7 ABOVE
   - –WG–2 ABOVE RWSW @ SAME HEIGHT AS INTEGRAL CRASH RAIL OF HR (NO HAND RAIL)

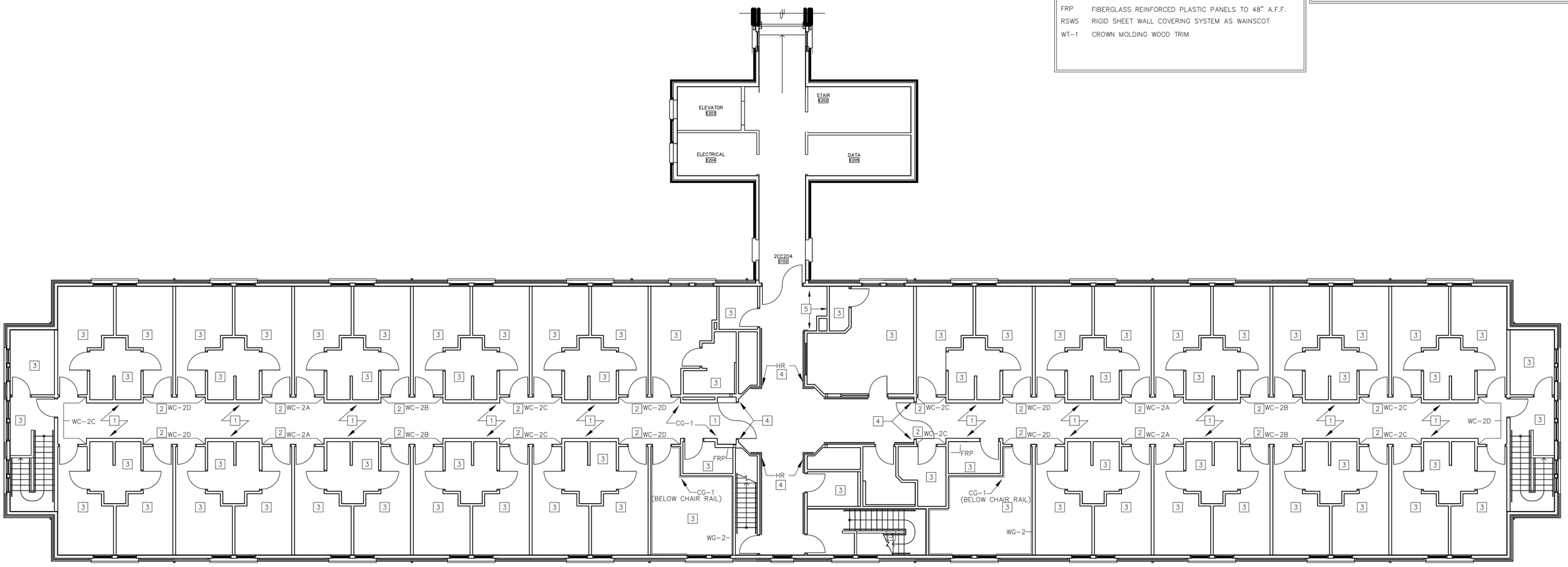

WALL FINISHES PLAN
1/8" = 1'–0"
0 4' 8' 16'
SCALE: 1/8" = 1'–0"

bloom design
INTERIORS
541.944.5533 552 A Street Ashland, OR 97520

REVISIONS	DATE

REGISTERED ARCHITECT
RAYMOND J. KISTLER
3172
ASHLAND, OREGON
STATE OF OREGON

kistler + small + white architects

KISTLER SMALL WHITE, ARCHITECTS
552 A STREET
ASHLAND, OREGON 97520
P: 541-488-8200
F: 541-552-9512
www.kistlersmallwhite.com

DEPARTMENT OF VETERANS AFFAIRS
SOUTHERN OREGON REHABILITATION CENTER & CLINICS
8495 CRATER LAKE HIGHWAY
WHITE CITY, OREGON

DRAWING TITLE:
SECOND FLOOR PLAN
WALL FINISHES
FULLY SPRINKLERED FACILITY

PROJECT TITLE
REPLACE DOM BLDG. 203

DRAWN BY:	DATE: 4 AUGUST 2014	DRAWING NO.: F2.2
CHECK BY:	VA PROJECT NO.: 692-339	DWG. 4 OF 4

US DEPARTMENT OF VETERANS AFFAIRS