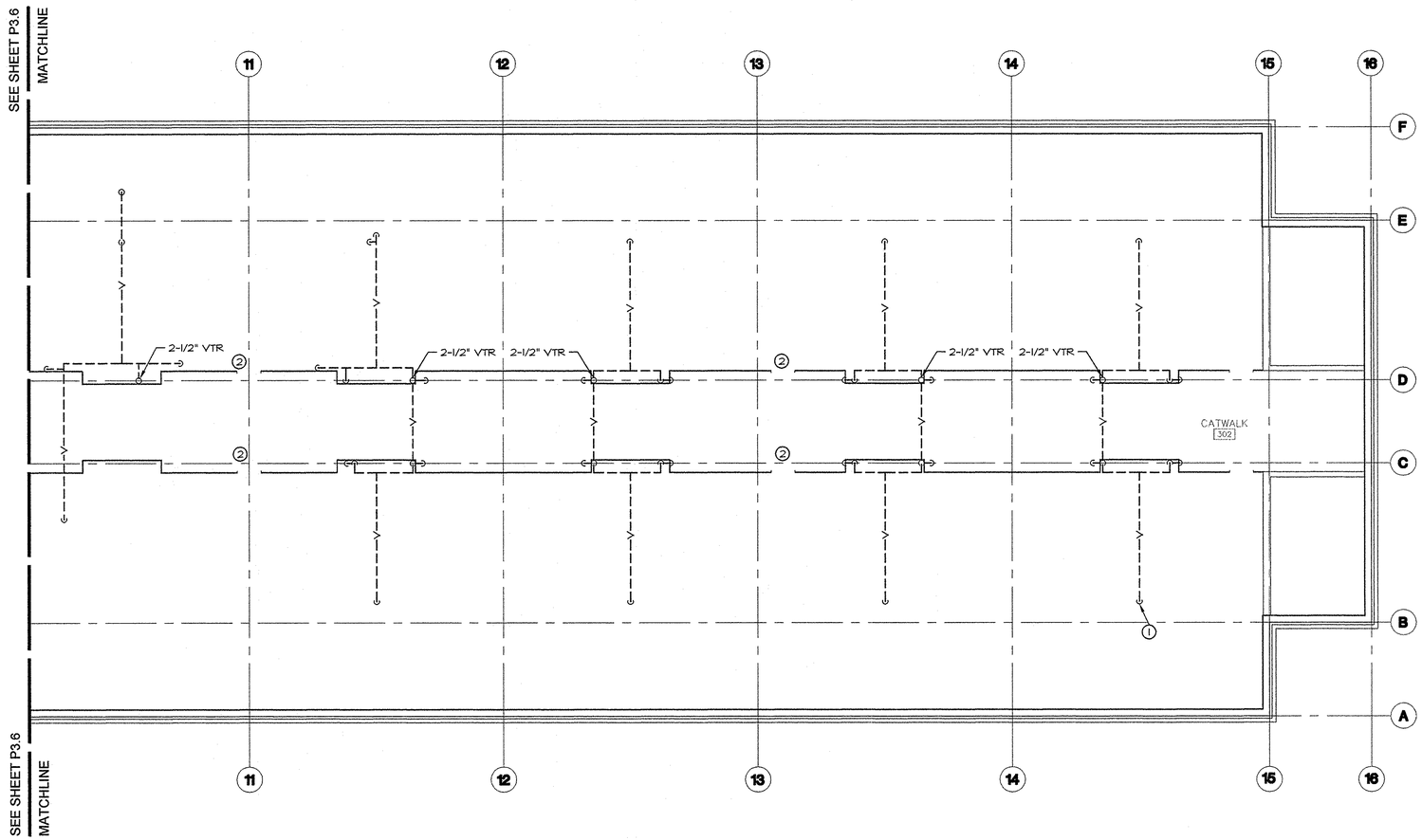

GENERAL NOTES

A. PLUMBING PLAN SHOWS GENERAL ROUTING AND ARRANGEMENT OF PIPING. SEE RISER DIAGRAMS ON SHEET P4.1 FOR PIPE SIZING, CHANGE IN SIZING LOCATION, INSTRUMENTATION AND SANITARY PIPING CLEANOUTS.

B. TYPICAL PLUMBING AT SHEARWALLS: ALL PLUMBING PENETRATIONS SHALL BE DRILLED NO LARGER THAN ONE INCH GREATER IN DIAMETER THAN PIPE SIZE. DO NOT CUT WALL PLATES OR BLOCKING AT SHEARWALLS. SEE STRUCTURAL PLANS FOR LOCATIONS OF SHEARWALLS.

C. ALL PIPING SHALL BE SLEEVED AND SEALED THROUGH ANY STRUCTURE OR CONCRETE.

D. WASTE AND VENT PIPING SHALL BE SCHED 40 PVC OR NO-HUB CAST IRON, UNLESS OTHERWISE NOTED. WASTE RISERS SHALL BE NO-HUB CAST IRON.

E. DOMESTIC WATER PIPING SHALL BE TYPE 'L' COPPER OR PEX WHERE NOT SHOWN AS RIGID PIPE.

F. SEE SPECIFICATION SECTION 23071I FOR PIPING INSULATION.

G. COORDINATE PLUMBING VENT LOCATIONS WITH MECHANICAL. LOCATE PLUMBING VENTS 10'-0" FROM ANY BUILDING OPENING OR HVAC AIR INTAKE, MINIMUM.

H. CONTRACTOR SHALL COORDINATE ROUTING AND SPACE REQUIREMENTS OF PIPING WITH STRUCTURAL MEMBERS AND ALL OTHER TRADES INCLUDING HVAC, FIRE PROTECTION, ELECTRICAL, AND COMMUNICATIONS/DATA.

I. FIRE CAULK ALL PIPE PENETRATIONS THROUGH FIRE-RATED WALLS, SEE ARCHITECTURAL, 8/M6.3, AND SPECIFICATIONS SECTION 078400. IN ADDITION, THE FOLLOWING PIPE & DUCT PENETRATIONS SHALL BE FIRESTOPPED:
- -FIRE AND SMOKE BARRIERS (SEE ARCH)
- -FIRE PARTITIONS (SEE ARCH)
- -CORRIDOR WALLS (SEE ARCH)
- -FLOORS & CEILINGS
- -SHAFT WALLS & FLOORS

J. PVC OR ABS PIPING 3" OR LESS IN DIAMETER SHALL BE SUPPORTED EVERY 3' WHERE POLYICYNENE INSULATION IS INSTALLED.

K. PLUMBING VENTS THROUGH ROOF SHALL HAVE A 1/2" MIN. SPACE AROUND THE STACK WHERE POLYICYNENE INSULATION IS INSTALLED.

KEYED NOTES

1. PIPE DOWN, SEE P3.5 FOR CONTINUATION, TYPICAL.
2. ATTIC ACCESS LOCATION, KEEP CLEAR.

TRUE NORTH

1 PLUMBING ATTIC PLAN - NORTH

SCALE: 3/16" = 1'-0"

MAI Project Number: 13-1130
MARQUESS & ASSOCIATES INC
P: 541-772-7115
F: 541-779-4079
1120 East Jackson
PO Box 490
Medford, OR, 97501

REVISIONS	DATE

REGISTERED PROFESSIONAL ENGINEER 16,570 OREGON MAY 18, 1993 OSCAR J. ZUNIGA JR.

kistler + small + white architects
RAYMOND KISTLER, ARCHITECT
552 A STREET
ASHLAND, OREGON 97520
P: 541-488-8200
F: 541-552-9512
www.kistlersmallwhite.com

DEPARTMENT OF VETERANS AFFAIRS
SOUTHERN OREGON REHABILITATION CENTER & CLINICS
8495 CRATER LAKE HIGHWAY
WHITE CITY, OREGON

DRAWING TITLE:
PLUMBING
ATTIC PLAN - NORTH

FULLY SPRINKLERED FACILITY

PROJECT TITLE		
REPLACE DOM BLDG. 203		
DRAWN BY: JDG	DATE: 4 AUGUST 2014	DRAWING NO.: P3.7
CHECK BY: OJZ	VA PROJECT NO.: 692-339	DWG. 9 OF 12

US DEPARTMENT OF VETERANS AFFAIRS

S:\13-1130_mech\P-FPA.dwg
Jul 31, 2014 - 12:36pm

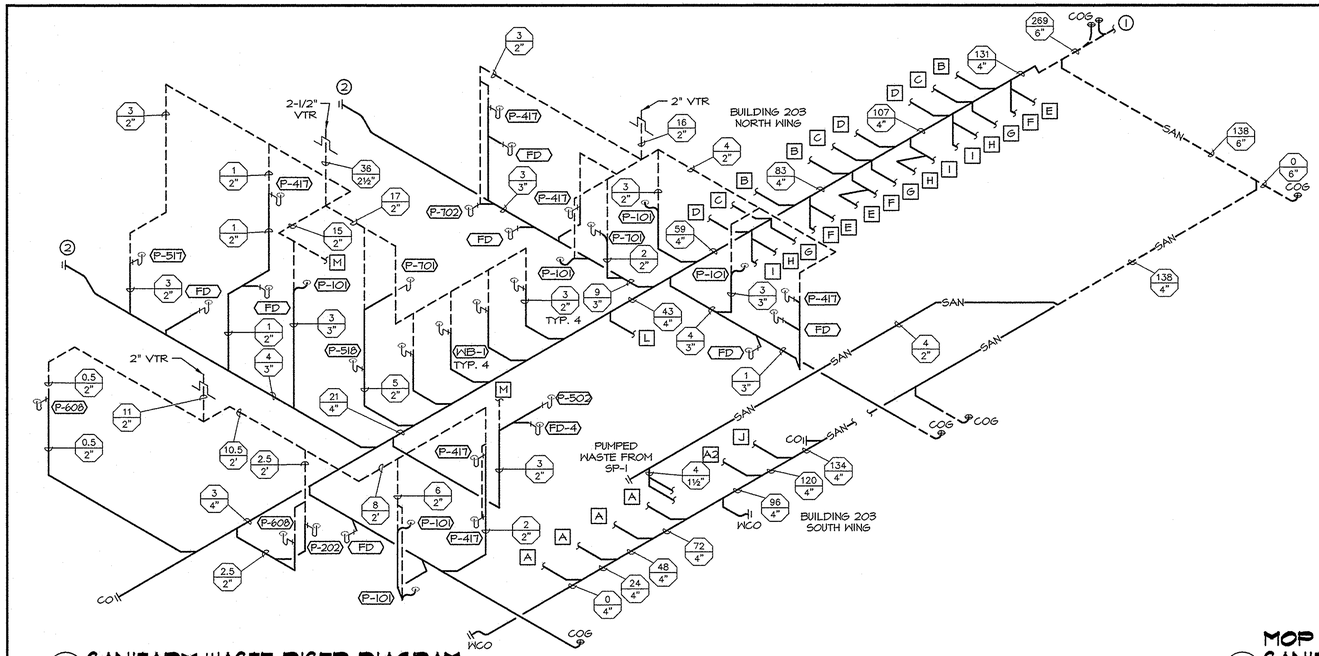

1 SANITARY WASTE RISER DIAGRAM
SCALE: NONE

WASTE FIXTURE UNITS - NEW					
DESCRIPTION	QUANTITY PRIVATE	QUANTITY PUBLIC	DRAIN PRIVATE F.U.	DRAIN PUBLIC F.U.	TOTAL WASTE F.U.
Floor Drain, emergency	45	1	0	0	0
Lavatory	39	0	1	1	39
Receptor, indirect waste, 2" trap, up to 7.5 gpm (1)	0	3	1	1	3
Receptor, indirect waste, 3" trap, up to 7.5 gpm (1)	0	1	1	1	1
Service Sink	0	6	0	3	18
Shower	37	0	2	2	74
Drinking Fountain	0	2	0.5	0.5	1
Breakroom Sink	0	1	2	2	2
Clothes Washer	0	4	3	3	12
Urinal, Flush Valve	0	1	2	2	2
Water Closet, Flush Valve	39	0	3	4	117
TOTAL DEMAND =					269

(1) FU determined by fixture that drains to receptor.

FIXTURE UNITS OBTAINED FROM TABLE 7-3, OREGON PLUMBING SPECIALTY CODE, 2011 EDITION, AND DEPARTMENT OF VETERANS AFFAIRS PLUMBING DESIGN MANUAL FOR DOMICILIARY PROJECTS (MARCH 2011).

GENERAL NOTES

A. RISER DIAGRAMS ARE SCHEMATIC, SCALE OF PIPING IS EXAGGERATED TO SHOW FIXTURE UNITS, SIZING, AND INSTRUMENTATION. ADDITIONAL PIPE FITTINGS MAY BE REQUIRED. SEE FLOOR PLANS FOR FIXTURE LOCATIONS AND PIPE ROUTING.

B. SEE ARCHITECTURAL FOR FIXTURE MOUNTING HEIGHTS.

C. SEE PLUMBING FIXTURE SCHEDULE FOR PIPE SIZING OF BRANCH CLOSEST TO FIXTURE. TRAP ARMS MAY BE SIZED THE SAME AS FIXTURE OUTLET.

D. TRAP PRIMER PIPING NOT SHOWN FOR CLARITY. SEE FLOOR PLANS FOR WATER AND DRAIN LOCATIONS, AND PLUMBING FIXTURE SCHEDULE FOR PRIMER REQUIREMENTS.

E. INSTALL WATER HAMMER ARRESTORS IN CONFORMANCE WITH MANUFACTURER'S INSTRUCTIONS AND GUIDELINES.

F. PROVIDE ACCESS DOOR TO ALL CONCEALED VALVES AND WATER HAMMER ARRESTERS.

KEYED NOTES

1. SEE CIVIL PLAN FOR CONTINUATION.
2. INSTALL WALL CLEANOUT ON BUILDING EXTERIOR.

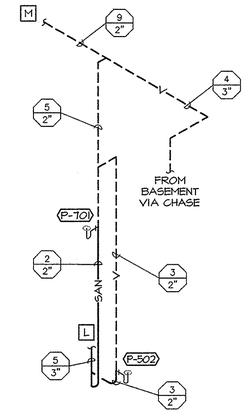

2 MOP BASIN - NORTH SANITARY WASTE RISER DIAGRAM
SCALE: NONE

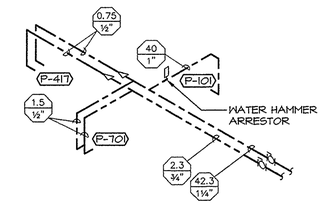

3 TYPICAL ROOM DOMESTIC WATER RISER DIAGRAM
SCALE: NONE

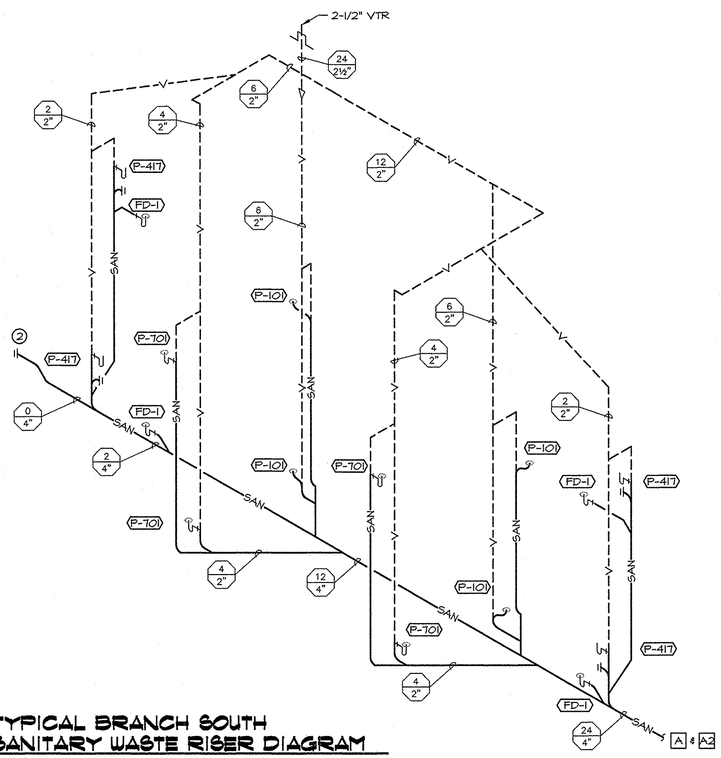

4 TYPICAL BRANCH SOUTH SANITARY WASTE RISER DIAGRAM
SCALE: NONE

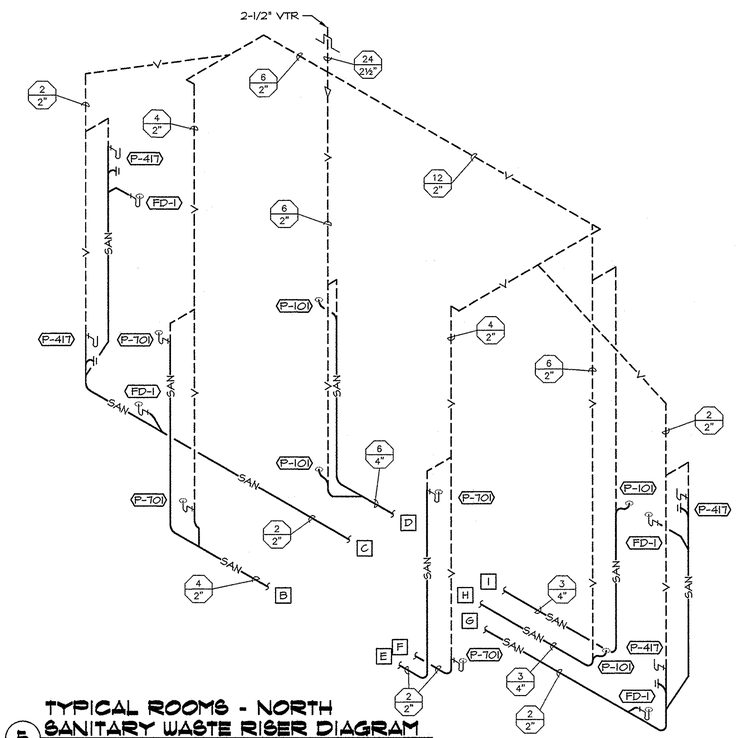

5 TYPICAL ROOMS - NORTH SANITARY WASTE RISER DIAGRAM
SCALE: NONE

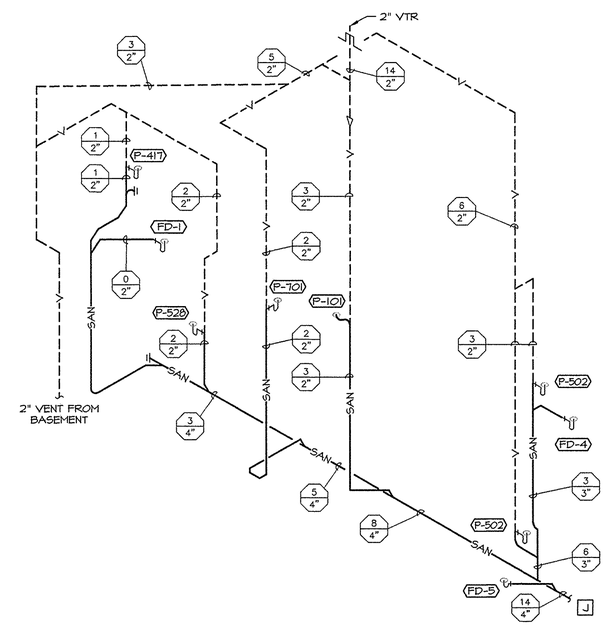

6 SINGLE ROOM - SOUTH SANITARY WASTE RISER DIAGRAM
SCALE: NONE

MAI Project Number: 13-1130

MARQUESS & ASSOCIATES INC
P: 541-772-7115
F: 541-779-4079
1120 East Jackson
PO Box 490
Medford, OR, 97501

REVISIONS	DATE

REGISTERED PROFESSIONAL ENGINEER 16,570 OREGON JULY 18, 1982 OSCAR J. ZUNIGA JR.
EXPIRES 6-30-14

kistler + small + white architects
RAYMOND KISTLER, ARCHITECT
502 A STREET
ASHLAND, OREGON 97520
P: 541-488-8200
F: 541-552-8812
www.kistlersmallwhite.com

DEPARTMENT OF VETERANS AFFAIRS
SOUTHERN OREGON REHABILITATION CENTER & CLINICS
8495 CRATER LAKE HIGHWAY
WHITE CITY, OREGON

DRAWING TITLE:
PLUMBING RISERS
FULLY SPRINKLERED FACILITY

PROJECT TITLE
REPLACE DOM BLDG. 203

DRAWN BY:	DATE:	DRAWING NO.:
JDG	4 AUGUST 2014	P4.1
CHECK BY: OJZ	VA PROJECT NO.: 692-339	DWG.10 OF 12

US DEPARTMENT OF VETERANS AFFAIRS

Jul 31, 2014 – 12:38pm

S:\13-1130_mech\P-P6528.dwg

NOTE: SEE 3/M6.1 FOR STEAM & CONDENSATE PIPING.

VERIFY PAD HEIGHT WITH WATER HEATER MFR AND CONDENSATE PUMP INLET ELEV.

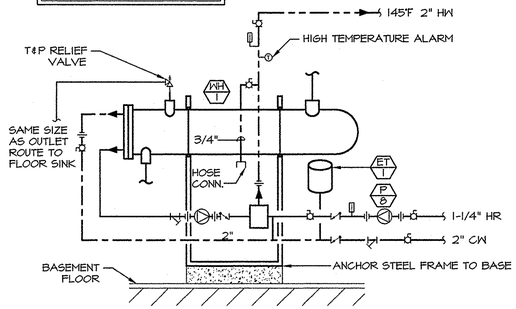

1 WATER HEATER PIPING INSTALLATION
SCALE: NONE

NOTE: LOCATE LOWER PART OF P-TRAP WITHIN FLOOR SINK IF NECASSARY.

CONDENSATE DRAIN MATERIALS SHALL BE TYPE 'L' COPPER.

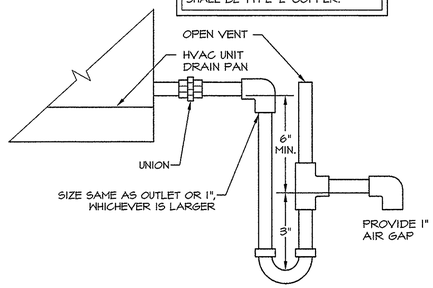

2 CONDENSATE TRAP & DRAIN
SCALE: NONE

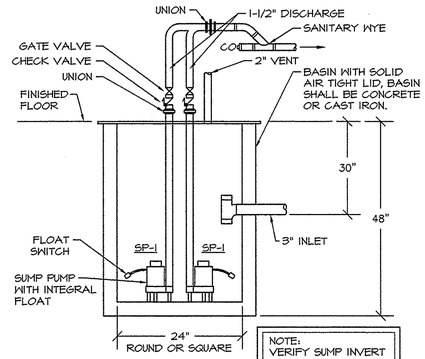

NOTE: VERIFY SUMP INVERT PRIOR TO ORDERING.

3 SANITARY SEWER SUMP PUMP INSTALLATION
SCALE: NONE

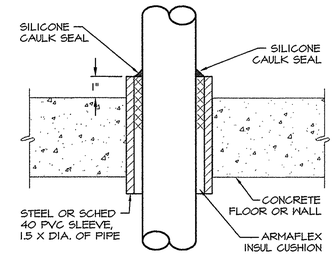

4 PIPE PENETRATION THROUGH CONCRETE
SCALE: NONE

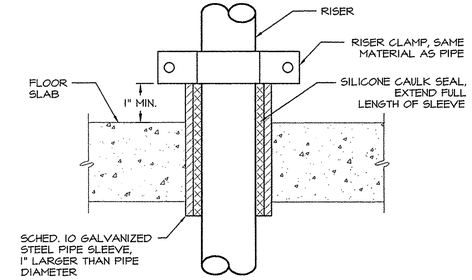

5 PIPE PENETRATION THROUGH FLOOR SLAB
SCALE: NONE

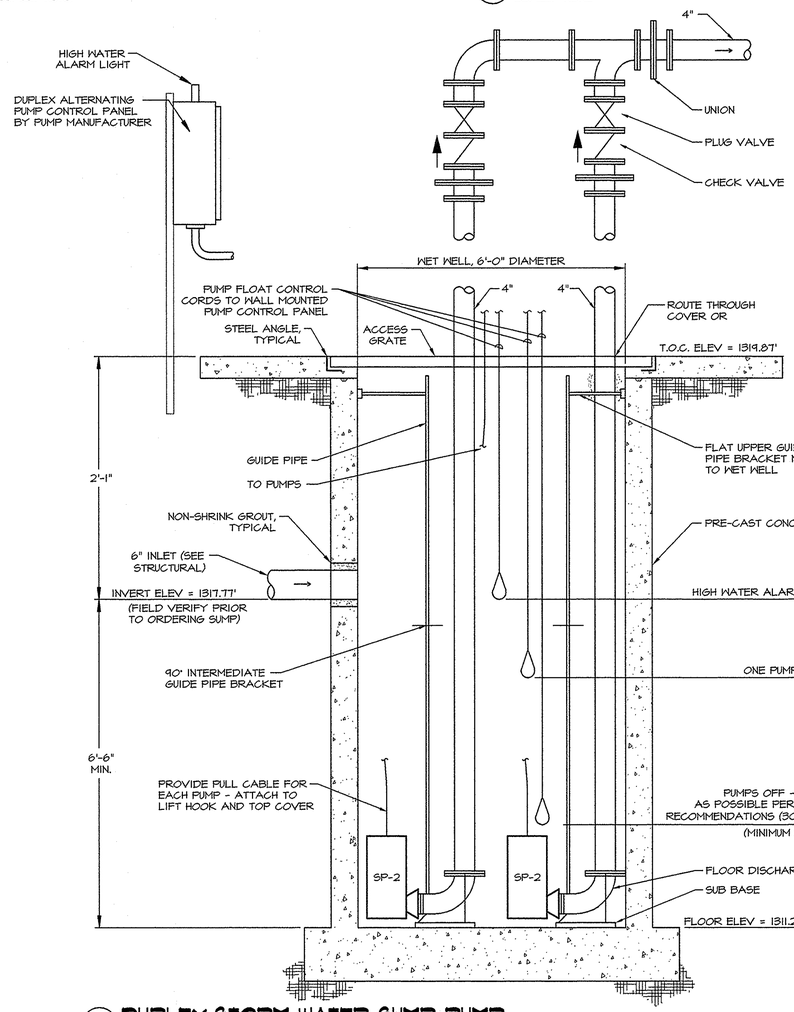

8 DUPLEX STORM WATER SUMP PUMP
SCALE: NONE

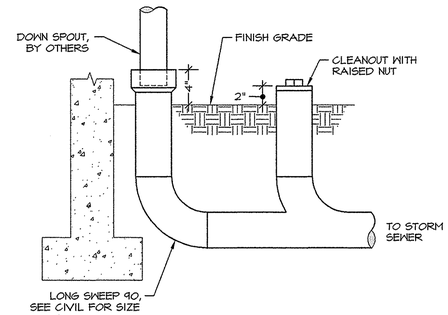

6 STORM DRAIN CONNECTION
SCALE: NONE

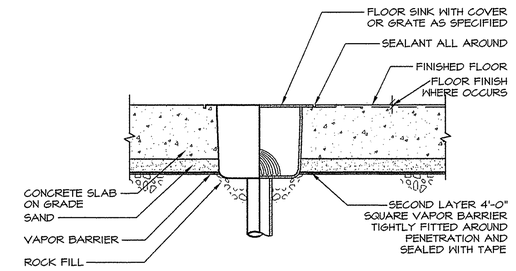

7 FLOOR SINK
SCALE: NONE

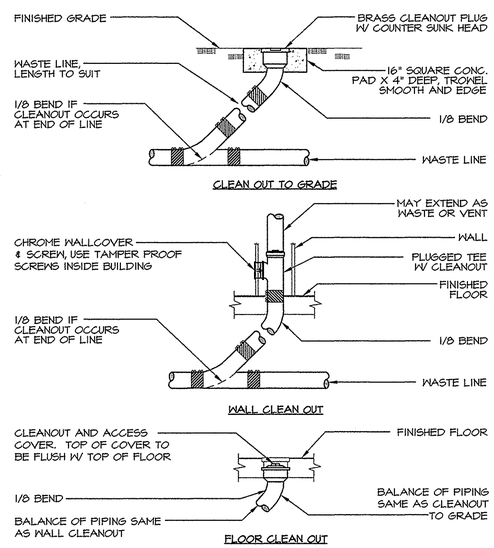

9 CLEANOUT DETAILS
SCALE: NONE

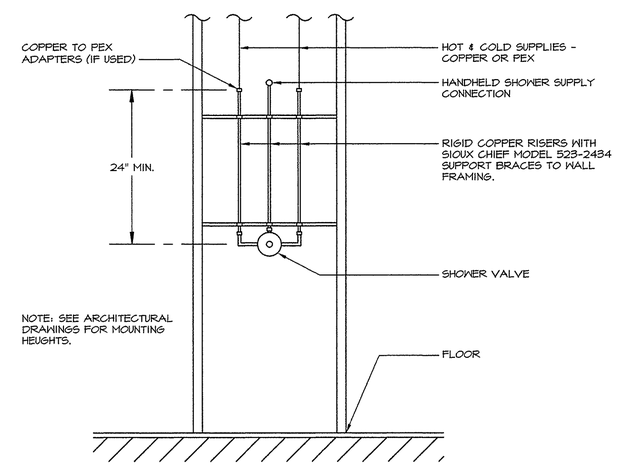

10 SHOWER VALVE SUPPORT
SCALE: NONE

MAI Project Number: 13-1130
MARQUESS & ASSOCIATES INC
P: 541-772-7115
F: 541-779-4079
1120 East Jackson
PO Box 490
Medford, OR, 97501

REVISIONS	DATE

REGISTERED PROFESSIONAL ENGINEER 16,570 OREGON MAY 18, 1993 OSCAR J. ZUNIGA JR. EXPIRES DATE: 6-30-16

kistler + small + white architects

RAYMOND KISTLER, ARCHITECT
552 A STREET
ASHLAND, OREGON 97520
P: 541-488-8200
F: 541-552-6512
www.kistlersmallwhite.com

DEPARTMENT OF VETERANS AFFAIRS

SOUTHERN OREGON REHABILITATION CENTER & CLINICS

8495 CRATER LAKE HIGHWAY
WHITE CITY, OREGON

DRAWING TITLE:

PLUMBING DETAILS

FULLY SPRINKLERED FACILITY

PROJECT TITLE: REPLACE DOM BLDG. 203

DRAWN BY:	DATE:	DRAWING NO.:
JDG	4 AUGUST 2014	P4.2
CHECK BY: OJZ	VA PROJECT NO.: 692-339	DWG.11 OF 12

US DEPARTMENT OF VETERANS AFFAIRS

S:\13-1130_mech\P-DET.dwg
Jul 31, 2014 - 12:39pm

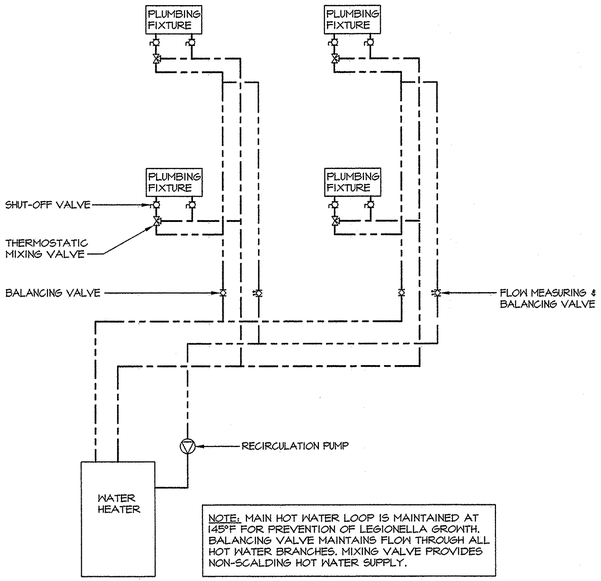

2 BALANCED RECIRCULATION SYSTEM
SCALE: NONE

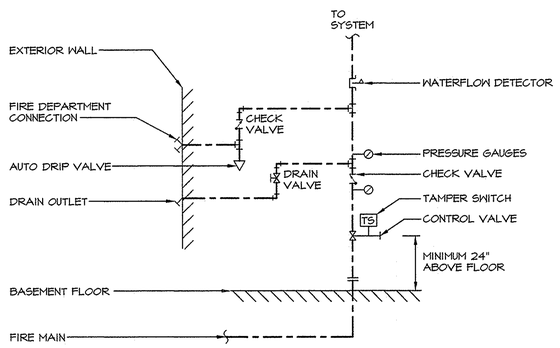

3 WET-PIPE SPRINKLER RISER DIAGRAM
SCALE: NONE

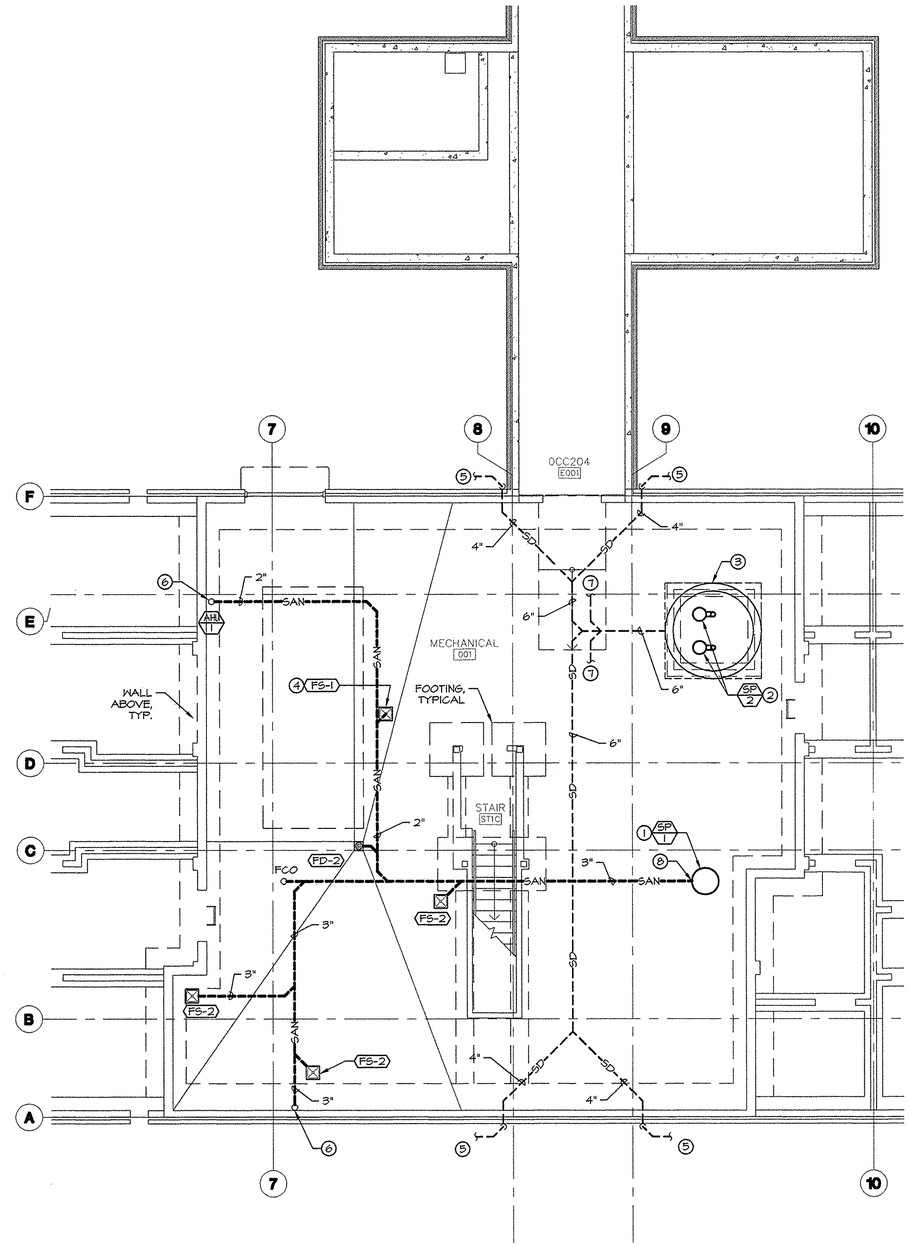

1 PLUMBING UNDER SLAB PLAN
SCALE: 3/16" = 1'-0"

TRUE NORTH

GENERAL NOTES

A. ALL PIPING SHALL BE SLEEVED AND SEALED THROUGH ANY STRUCTURE OR CONCRETE.

B. SLOPE ALL SANITARY PIPING 1/4" PER FOOT, MINIMUM, UNLESS NOTED OTHERWISE.

C. THE FOLLOWING SANITARY PIPING SHALL BE CAST IRON:
1. PIPING BELOW GRADE.
2. WASTE RISERS.
3. EXPOSED WASTE PIPING IN BASEMENT.
4. PIPING WITH WASTE WATER THAT COULD EXCEED 140°F.
5. PIPING DESIGNATED WITH HEAVY BOLD LINES.

D. PROVIDE AND INSTALL CLEANOUTS ON BELOW GRADE STORM PIPING AT ITS UPPER TERMINAL AND FOR EACH AGGREGATE HORIZONTAL CHANGE OF DIRECTION EXCEEDING 135°.

E. SLOPE HORIZONTAL STORM DRAIN PIPING AT 1/8" PER FOOT, MIN.

KEYED NOTES

1. SEE 3/P4.2 FOR PUMP INSTALLATION.
2. SEE 7/P4.2 FOR PUMP INSTALLATION.
3. PROVIDE SQUARE PRE-CAST SUMP FOR STORMWATER PUMPS, OLDCASTLE OR EQUAL, WITH FITTED COVER FOR DUPLEX SUMP PUMPS. SUMP SHALL BE 5' SQUARE INSIDE DIMENSION, 9' DEEP. PLACE VAULT IN ACCORDANCE WITH MANUFACTURER'S RECOMMENDATION. REFER TO STRUCTURAL FOR SUMP BASE, BACKFILL, AND TIE-IN TO BASEMENT FLOOR SLAB.
4. SEE 6/P4.2 FOR TYPICAL FLOOR SINK INSTALLATION.
5. CONNECT 4" SD TO PERIMETER DRAIN, SEE STRUCTURAL AND CIVIL. PERIMETER DRAIN LOCATED AT FOOTING LEVEL. STORM DRAIN PIPING (GRAVITY DRAIN) MAY BE SCHEDULE 40 PVC.
6. SEE 1/P3.0 FOR CONTINUATION.
7. CONNECT TO UNDERSLAB DRAIN PIPING, SEE STRUCTURAL.
8. ROUTE 3" SANITARY TO INLET OF SP-1.

MAI Project Number: 13-1130
MARQUESS & ASSOCIATES INC
P: 541-772-7115
F: 541-779-4079
1120 East Jackson
PO Box 490
Medford, OR, 97501

REVISIONS	DATE

REGISTERED PROFESSIONAL ENGINEER 16,570 OREGON JULY 18, 1989 OSCAR J. ZUNIGA JR.

kistler + small + white architects
RAYMOND KISTLER, ARCHITECT
552 A STREET
ASHLAND, OREGON 97520
P: 541-488-8200
F: 541-552-9512
www.kistlersmallwhite.com

DEPARTMENT OF VETERANS AFFAIRS

SOUTHERN OREGON REHABILITATION CENTER & CLINICS

8495 CRATER LAKE HIGHWAY
WHITE CITY, OREGON

DRAWING TITLE:
PLUMBING UNDER SLAB PLAN

FULLY SPRINKLERED FACILITY

PROJECT TITLE
REPLACE DOM BLDG. 203

DRAWN BY: JDG	DATE: 4 AUGUST 2014	DRAWING NO.: P4.3
CHECK BY: OJZ	VA PROJECT NO.: 692-339	DWG.12 OF 12

US DEPARTMENT OF VETERANS AFFAIRS

Jul 31, 2014 - 1:45pm

S:\13-1130_mech\P-UNDERSLAB.dwg

1. The ultrasonic occupancy sensors shall be capable of detecting presence in the control area by detecting doppler shifts in transmitted ultrasound. The ultrasonic frequency shall be 25kHz at ± 0.005%. The sensor shall be precision crystal controlled and shall not interfere with each other when two or more are placed in the same area. Sensor shall utilize Advanced Signal Processing to automatically adjust the detection threshold dynamically to compensate for constantly changing levels of activity and air flow through the controlled space. Ultrasonic circuit shall be solid state crystal controlled. Sensor shall have a multi-directional transmitter with temperature and humidity resistant, 25kHz tuned ultrasonic receivers. Ultrasonic receivers shall be temperature and humidity resistant with less than a 6dB shift in the humidity range of 10% to 90% and less than a 10dB shift in the temperature range of -20° to 60°C.

2. Detection shall be maintained when a person moves only within or a maximum distance of twelve inches either in a horizontal or vertical manner at the approximate speed of 12 inches per second. The sum of this distance, volume and speed represent the average condition ultrasonic sensors must meet in order for the lights to not go off when a person is reading or writing while seated at a desk.

3. Each sensor shall be furnished with a shunt provision which will enable a custodian or building engineer to bypass the sensor in the event of failure. This bypass provision pin shall remain in the sensor and be visible from the floor as a constant reminder that the automatic function has been bypassed.

4. Sensors shall cover 360° and 1000 square feet of COVERAGE AREA.

5. Power pack shall be a self-contained transformer and relay module measuring 1.6" x 2.75" x 1.6". For ease and speed of installation, power pack shall have 1/2" snap-in nipple for 1/2" knockouts and mounting on outside of enclosure. Power packs shall have dry contacts capable of switching 20 amp ballast load, 13 amp incandescent, 1 hp @ 120 VAC, 60Hz; AND 1 hp @ 220-240 VAC, 60 Hz. Power packs shall provide a 24 VDC, 150 mA output. Power packs shall have low voltage teflon coated leads, rated for 300 volts, suitable for use in plenum applications. Power pack shall be UL 2043 rated, use UL94 V-O plenum rated plastic, and have low voltage teflon coated leads, rated for 300 volts.

6. Sensor AND POWER PACK shall be manufactured by an ISO 9002 certified manufacturing facility and shall have a defect rate of less than 1/3 of 1%.

7. Sensor AND POWER PACK shall be UL LISTED and have a standard 5 year warranty.

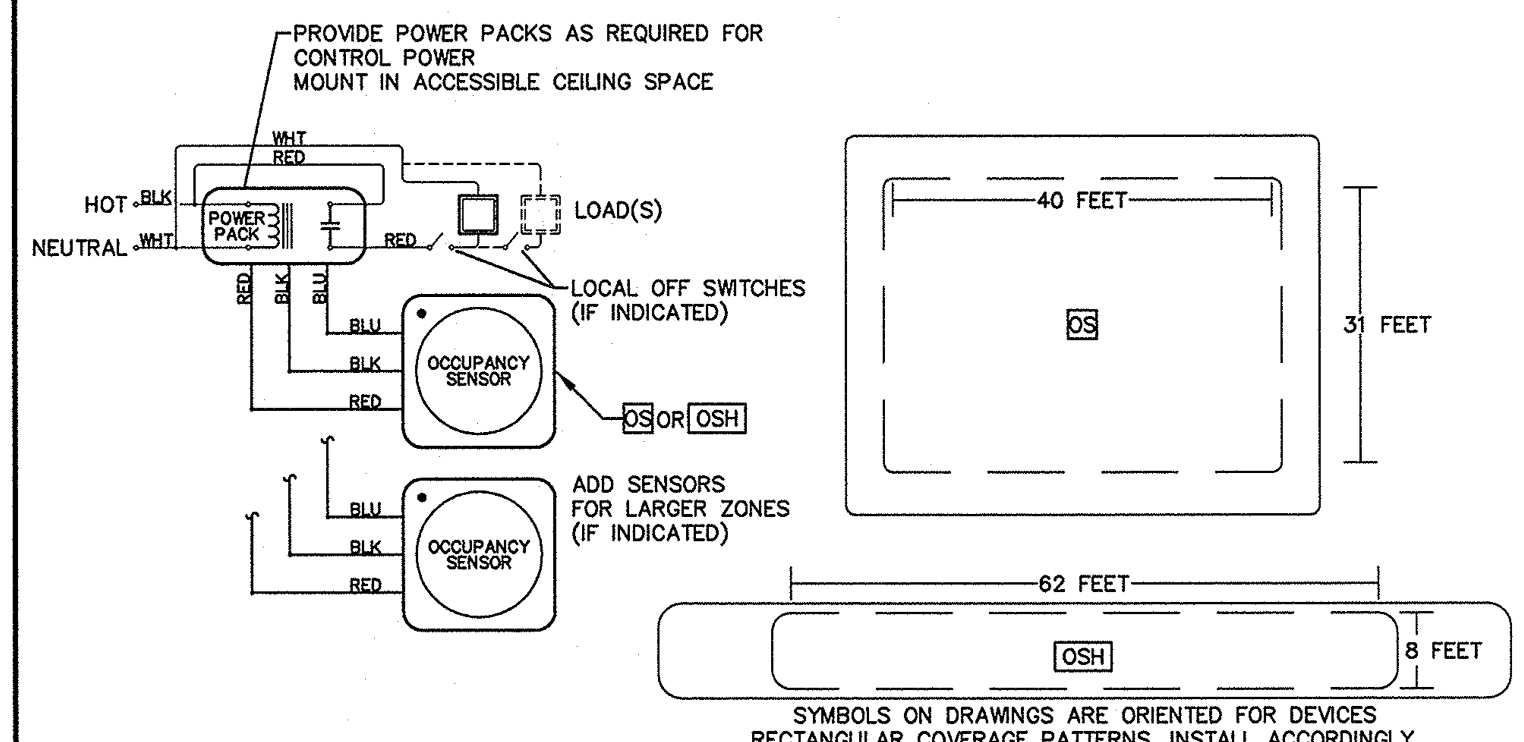

SYMBOLS ON DRAWINGS ARE ORIENTED FOR DEVICES RECTANGULAR COVERAGE PATTERNS. INSTALL ACCORDINGLY.

SET TIME DELAY OFF TO MAXIMUM
COORDINATE LOCATION WITH HVAC SUPPLY GRILLES PER MANUFACTURER RECOMMENDATION

1 CEILING OCCUPANCY SENSOR

SCALE: NOT TO SCALE

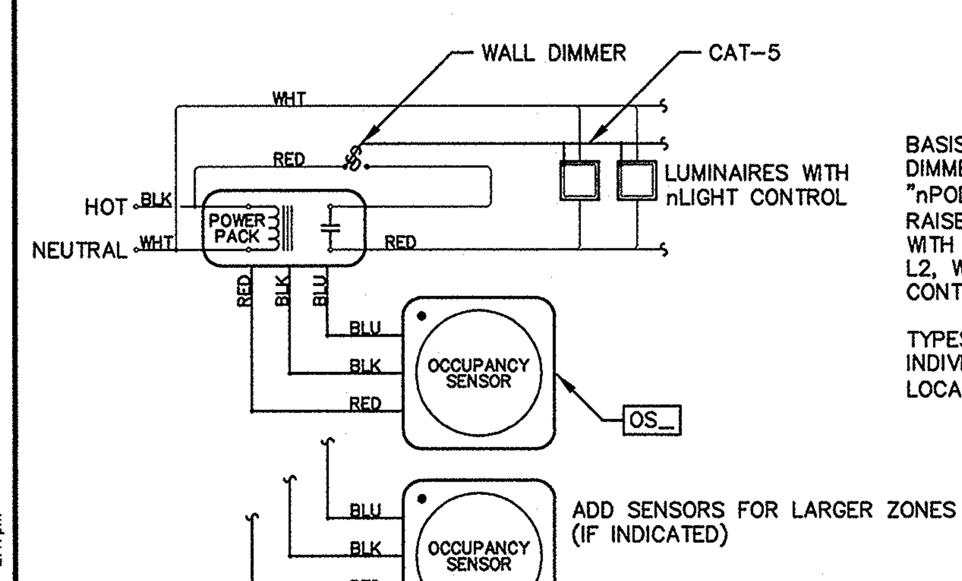

BASIS OF DESIGN "ON/OFF+RAISE/LOWER" WALL DIMMER IS SENSOR SWITCH MODEL "nPOD-DX-IVORY". CONTROL ALLOWS RAISE/LOWER DIMMING OF LUMINAIRES PROVIDED WITH nIIGHT CONTROL CAPABILITY: TYPES C, G, L2, WHERE LUMINAIRES ARE INDICATED TO BE CONTROLLED BY WALL DIMMER.

TYPES C, G, AND L2 ARE INSTALLED IN INDIVIDUAL WORK SPACES WHERE CONTROL IS LOCAL (IN SAME ROOM).

2 DIMMING CONTROLS DETAIL

SCALE: NOT TO SCALE

ABBREVIATIONS:

NEC	NATIONAL ELECTRICAL CODE
AFG	ABOVE FINISHED GRADE
AFF	ABOVE FINISHED FLOOR
BFC	BELOW FINISHED CEILING
WP	WEATHER PROOF
GFI	PROTECTED BY GROUND FAULT CIRCUIT INTERRUPTER
J-BOX	JUNCTION BOX
ATS	AUTOMATIC TRANSFER SWITCH
CU	COPPER
C	CELSIUS
C.	CONDUIT
TYP	TYPICAL
UON	UNLESS OTHERWISE NOTED
IG	ISOLATED GROUND
CT	CURRENT TRANSFORMER
EM	DEVICE ON EMERGENCY CIRCUIT
EMT	ELECTRICAL METALLIC TUBING
RMC	RIGID METALLIC CONDUIT
PVC	RIGID NONMETALLIC CONDUIT
CB	CIRCUIT BREAKER
V	VOLTS
A	AMPERES
W	WATTS
VA	VOLTAMPERES
HP	HORSEPOWER
NA	NOT APPLICABLE
PMR	PER MANUFACTURER'S REQUIREMENTS
NL	24-HOUR-ON, NIGHT LIGHTING (UNSWITCHED)
(E)	EXISTING
(R)	REMOVE
(REL)	RELOCATE

SYMBOLS:

	SINGLE RECEPTACLE, NEMA 5-20R UON
	DUPLEX RECEPTACLE, NEMA 5-20R
	TWO DUPLEX RECEPTACLE IN 2-GANG BOX, NEMA 5-20R
	RECEPTACLE CONTROLLED BY WALL SWITCH
	FLUSH FLOOR BOX WITH TWO DUPLEX RECEPTACLES IN 2-GANG BOX.
	JUNCTION BOX
	VERIFY CONNECTION WITH MANUFACTURER'S RECOMMENDATIONS
	ELECTRICAL POWER PANELBOARD
	DATACOM OUTLET LOCATION, SEE APPLICABLE DETAIL
CS	CARD SWIPE (READER). SEE SPECIFICATIONS.
SP	PUBLIC ADDRESS SPEAKER
	FLUSH FLOOR COMBINATION RECEPTACLE/TELEPHONE OUTLET
TV	CABLE TV DROP LOCATION, BOX, CONDUIT, COVER, PULL-CORD
A	LUMINAIRE WITH TYPE TAG (SYMBOL VARIES WITH TYPE - SEE SCHEDULE)
$	SINGLE POLE, SINGLE THROW SWITCH
$2	SINGLE POLE, DOUBLE THROW SWITCH
$3	THREE-WAY SWITCH
$K	KEYED SWITCH
$4	FOUR-WAY SWITCH
$OS	WALL SWITCH STYLE OCCUPANCY SENSOR
$D	WALL SWITCH - DIMMER FOR LED. SEE DIMMING CONTROLS DETAIL FOR BASIS OF DESIGN.
OS	CEILING MOUNTED OCCUPANCY SENSOR. SEE DETAILS.
OSH	CEILING MOUNTED OCCUPANCY SENSOR. FOR HALLWAY APPLICATION SEE DETAILS.
PP	POWER PACK FOR CEILING MOUNTED OCCUPANCY SENSORS. SEE DETAILS.
$M	MANUAL MOTOR STARTER
	FUSED DISCONNECT SWITCH
	NONFUSIBLE DISCONNECT SWITCH
HVAC #	MECHANICAL EQUIPMENT CONNECTION TAG
	EXIT SIGNAGE. SHADED FACE INDICATES SIDE WITH 'EXIT' STENCILED FACE. ARROW INDICATES DIRECTION THAT CHEVRONS POINT. SEE LUMINAIRE SCHEDULE. EXIT SIGNAGE BRANCH CIRCUIT SHALL NOT BE SWITCHED.
	RACEWAY CONCEALED IN WALL OR ABOVE CEILING SPACE UON
	RACEWAY ROUTED UNDER FLOOR OR GRADE
	BRANCH CIRCUIT WIRING. ARROWHEAD INDICATES HOME-RUN TO OVERCURRENT PROTECTION DEVICE (TEXT AT ARROWHEAD IDENTIFIES DEVICE). SHORT MARK INDICATES PHASE CONDUCTOR. LONG MARK WITHOUT TAIL INDICATES NEUTRAL CONDUCTOR. LONG MARK WITH TAIL INDICATES GROUNDING CONDUCTOR.
DMM	DIGITAL METER ON CIRCUIT BREAKER. ONLY THOSE NOTED FOR CONNECTION TO METASYS ARE TO CONNECT TO METASYS (203SB, 203DP, CHILLER-203).

GENERAL NOTES:

A. SOME CIRCUITS ARE SHOWN AS SINGLE CIRCUIT HOME RUNS FOR CLARITY PURPOSES. CIRCUITS MAY BE COMBINED IN HOME RUNS AS APPROPRIATE AND AS ALLOWED BY CODE (MAX. THREE CIRCUITS PER CONDUIT). UNLESS OTHERWISE NOTED, CIRCUITS CONNECTED TO 20 AMP, SINGLE POLE CIRCUIT BREAKERS SHALL BE CONNECTED WITH TWO #12CU & ONE #12CU GROUND IN 1/2" CONDUIT.

B. LOCATE AND PRESERVE EXISTING UNDERGROUND UTILITIES. ROUTE NEW CONDUITS TO AVOID EXISTING UTILITIES. CALL UTILITY COMPANIES PRIOR TO TRENCHING FOR NEW UNDERGROUND CONDUITS.

C. PROVIDE LARGE RADIUS STEEL ELBOWS FOR ALL LOW VOLTAGE UNDERGROUND CONDUIT BENDS AND SWEEPS.

D. COORDINATE ELECTRICAL DEVICE MOUNTING AND LOCATION WITH FURNITURE SUPPLIER PRIOR TO ROUGH-IN.

E. CONDUITS CROSSING SEISMIC JOINTS SHALL BE PROVIDED WITH EXPANSION FITTINGS TO ALLOW FOR SEISMIC MOVEMENT.

F. MOUNT TELEPHONE AND DATA OUTLETS AT THE SAME ELEVATION AND ORIENTATION AS RELATED POWER RECEPTACLE. LOCATE WITHIN 12" OF EACH OTHER.

G. BACK TO BACK BACKBOXES IN COMMON RATED WALLS SHALL BE SEPARATED A MINUMUM OF 24".

H. MOUNT LIGHTING WALL SWITCHES AT 42" AFF TO CENTER OF BOX UNLESS OTHERWISE NOTED.

I. MOUNT RECEPTACLES AT 15" AFF TO CENTER OF BOX UNLESS OTHERWISE NOTED.

FIRE PENETRATION NOTE:

CONTRACTOR SHALL PROTECT ALL PENETRATIONS THROUGH FIRE-RATED WALLS, FLOORS, AND CEILINGS. SEE ARCHITECTURAL DRAWINGS AND SPECIFICATION SECTION 078400.

DEMOLITION NOTE:

DEMOLITION: THE FOLLOWING ARE ITEMS TO BE SALVAGED BY THE CONTRACTOR: FIRE ALARM CONTROL PANEL AND ALL SIGNAGE.
THE FOLLOWING ARE ITEMS TO BE SALVAGED BY THE VA: EXTERIOR SITE LIGHITNG POLES, ANDOVER SECURITY SYSTEM, EXIT SIGNS, SMOKE DETECTOR/BASES, AND FIRE ALARM PULL STATIONS.

LUMINAIRE SCHEDULE - SEE SPECIFICATION SECTION 090600 FOR BASIS OF DESIGN

MARK	LUMINAIRE			LAMP		NOTES
	DESCRIPTION	MOUNTING	POSITION	#	CATALOG #	
A	23-11/16"X48"X5-1/2" RECESSED DIRECT/INDIRECT TROFFER WITH SIDE-MOUNTED DIFFUSERS.	LAY-IN	CEILING	2	FO32/841/XP/ECO	1
B	4-3/8"X48"X4-1/8" HEAVY-DUTY STRIP WITH WIRE-GUARD AND CHAIN-HANGERS AS NEEDED. (WALL-MOUNTED IN CATWALK SPACE)	SURFACE OR CHAIN	CEILING OR WALL	2	FO32/841/XP/ECO	1
C	24"X48"X3-1/4" RECESSED LENSED TROFFER, LED 4000LM	SURFACE	WALL	LED	4000K LED; 40W 4000 LM	1
D	10"X48"X3" ACRYLIC WRAPAROUND SURFACE-MOUNT	SURFACE	CEILING	2	FO32/841/XP/ECO	1
F1	ADA WALL SCONCE- CF- PUBLIC CORRIDOR IN "WINGS" OFF CENTRAL CORE, COOL SATIN	SURFACE	WALL	1	26W QUAD CFL	1,3
F2	ADA WALL SCONCE- CF- PUBLIC CORRIDOR IN CENTRAL CORE, COOL SATIN	SURFACE	WALL	1	13W QUAD CFL	1,3
G	LED CAN LIGHT	RECESSED	CEILING	LED	4000K LED, 18W 1000 LM	1
H	CANOPY LIGHT	SURFACE	CEILING	1	32W TRT CFL	1,2
J	25-5/8"X4-1/8"X4-7/8" VANITY WALL BRACKET AT DWELLING UNIT MIRRORS	SURFACE	WALL	1	FO17/841/XP/ECO	1
K	26-5/16"X5-1/4"X8-1/8" WALL-MOUNTED BED LIGHT	SURFACE	WALL	2	FO17/841/XP/ECO	1
L2	48"X10-1/8"X3-7/8" SURFACE-MOUNTED VOLUMETRIC LENSED, LED	SURFACE	CEILING	LED	4000K LED; 40W 4000 LM	1
M	DECORATIVE ROUND SURFACE MOUNT 13"	SURFACE	CEILING	LED	16W LED	1
M2	DECORATIVE ROUND SURFACE MOUNT 16"	SURFACE	CEILING	LED	24W LED	1
N	POLE LIGHT - LED	EXTERIOR	GROUND	1	41W LED	1,4
P	EXTERIOR WALL MOUNT AT CHILLER	EXTERIOR	WALL	1	42W TRT CFL	1
Q1	WALL MOUNT FIXTURE 24"-LONG LED AT RESIDENT DOORS SEE KEYED NOTE 6 ON E3.2 AND E3.3 FOR CONTROL INFORMATION	SURFACE	WALL, SEE ELEVATIONS	LED	4000K LED; 13W 1200 LM	1
Q2	WALL MOUNT FIXTURE 48"-IN STAIR TOWERS SEE KEYED NOTE 4 ON E3.2 AND E3.3 FOR CONTROL INFORMATION	SURFACE	CEILING/ WALL	1	4000K LED; 43W 4100 LM	1
U	UNDERCABINET LIGHT - LED - CORD/PLUG CONNECT TO SWITCHED DUPLEX ATTACH AND CONCEAL CORD UNDER CABINET. UNIT ROCKER SWITCH	UNDER CABINET	DOWN FACING	LED	12W LED	1
X	SURFACE EXIT LIGHT LED	SURFACE			LED	1

NOTES:
1) PROVIDE FOR 120 VOLT POWER SUPPLY
2) CONTRACTOR SHALL MOUNT IN SUCH A FASHION TO MINIMIZE VISIBLE SURFACE CONDUIT UNDER DECK.
3) VERIFY LENS, FINISH, AND LAMP COLOR WITH INTERIOR DESIGNER
4) SEE POLE BASE DETAIL. POLE SPECIFICATION: LITHONIA SSS 12 4C T30 COLOR (PRISMA ARCHITECTURAL MATTE METALLIC GRAY)

MECHANICAL CONNECTION SCHEDULE

ALL CONNECTIONS TO BE PERFORMED BY CONTRACTOR UON.
SEE PANEL SCHEDULES FOR ADDITIONAL INFORMATION

UNIT	LOCATION	V	PH	LOAD	CONDUCTORS: PHASE #	PHASE SIZE	NEUTRAL #	NEUTRAL SIZE	GROUND #	GROUND SIZE	CONDUIT SIZE	CONDUIT TYPE	DISCONNECT - STARTER - CONTROLS: DESCRIPTION	NEMA TYPE	FRAME SIZE	C.B. OR FUSE	TRIP SETTING	NOTES
AHU-1	MECH 001	208	3	39.5 MCA	3	3	1	3	1	8	1-1/4	EMT	INTREGRAL DISCONNECT					
CH-203	WEST EXTERIOR	208	3	174 MCA	3	3/0	1	3/0	1	6	2	EMT	COMBINATION STARTER	3R	200	FUSE	200	
P-1	MECH 001	208	1	1/2 HP	2	12	-	-	1	12	3/4	EMT	MANUAL MOTOR SWITCH	3R				3
P-2	MECH 001	208	3	1.5 HP	3	12	-	-	1	12	3/4	EMT	INSTALL VFD (SEE NOTES)	3R				3,4
P-3	MECH 001	115	1	1.9 A	1	12	1	12	1	12	3/4	EMT	MANUAL MOTOR SWITCH	3R				3
P-4	AT C-203	208	3	3 HP	3	12			1	12	3/4	EMT	SEE NOTES					3,5
P-5	MECH 001	208	3	1.5 HP	2	12			1	12	3/4	EMT	INSTALL VFD (SEE NOTES)	3R				3,6
P-6	MECH 001	208	1	3/4 HP	2	12			1	12	3/4	EMT	MANUAL MOTOR SWITCH	3R				3
P-7	MECH 001	120	1	1/2 HP	1	12	1	12	1	12	3/4	EMT	MANUAL MOTOR SWITCH	3R				
P-8	MECH 001	120	1	1/8 HP	1	12	1	12	1	12	3/4	EMT	MANUAL MOTOR SWITCH	3R				
SP-1	MECH 001	120	1	10.1 A	1	12	1	12	1	12	3/4	EMT	CORD AND PLUG					3
SP-CP	MECH 001	208	3	39.6 A	3	8	1	8	1	10	3/4	EMT	SEE NOTES				50	1
SP-2A	MECH 001	208	3	3 HP	3	10	1	10	1	10	3/4	EMT	SEE NOTES					2
SP-2B	MECH 001	208	3	3 HP	3	10	1	10	1	10	3/4	EMT	SEE NOTES					2
H-1	MECH 001	208	3	73 A	3	3	1	3	1	8	1-1/4	EMT	NON-FUSED DISCONNECT	3R	100			
WH-1	MECH 001	120	1	1 A	1	12	1	12	1	12	3/4	EMT	MANUAL MOTOR SWITCH	3R				
CP-1	MECH 001	120	1	1/3 HP	1	12	1	12	1	12	3/4	EMT	MANUAL MOTOR SWITCH	3R				

NOTES:
1) STORM WATER PUMP CONTROL PANEL. INTEGRAL DISCONNECTS AND OVERCURRENT PROTECTION. FURNISHED BY PLUMBING CONTRACTOR.
2) CONNECT PUMP TO STORM WATER PUMP CONTROL PANEL FURNISHED BY PLUMBING CONTRACTOR. PANEL INCLUDES DISCONNECTS AND STARTERS. SP-2A AND SP-2B ARE CALLED SP-2 ON PLUMBING DRAWINGS.
3) TWO PUMP CONNECTIONS PER UNIT. PUMPS TO RUN NON-CONCURRENTLY.
4) CONNECT TO MECHANICAL CONTRACTOR FURNISHED VARIABLE FREQUENCY DRIVE.
5) THIS PUMP IS CONNECTED TO CHILLER SINGLE POINT POWER CONNECTION.
6) VARIABLE FREQUENCY DRIVE FURNISHED BY MECHANICAL CONTRACTOR, INSTALLED BY ELECTRICAL CONTRACTOR.

MAI Project Number: 13-1130
MARQUESS & ASSOCIATES INC
P: 541-772-7115
F: 541-779-4079
1120 East Jackson
PO Box 490
Medford, OR, 97501

REVISIONS	DATE

REGISTERED PROFESSIONAL ENGINEER 74818PE OREGON MARCH 8, 2005 WILLIAM D. LOMICA
RENEWAL DATE: 12-31-20/4

kistler + small + white architects
RAYMOND KISTLER, ARCHITECT
552 A STREET
ASHLAND, OREGON 97520
P: 541-488-8200
F: 541-552-9512
www.kistlersmallwhite.com

DEPARTMENT OF VETERANS AFFAIRS
SOUTHERN OREGON REHABILITATION CENTER & CLINICS
8495 CRATER LAKE HIGHWAY
WHITE CITY, OREGON

DRAWING TITLE:
ELECTRICAL LEGENDS, NOTES, AND EQUIPMENT SCHEDULES

FULLY SPRINKLERED FACILITY

PROJECT TITLE		
REPLACE DOM BLDG. 203		
DRAWN BY: WDL	DATE: 4 AUGUST 2014	DRAWING NO.: E0.1
CHECK BY: WDL	VA PROJECT NO.: 692-339	DWG. 1 OF 27

US DEPARTMENT OF VETERANS AFFAIRS

C:\Users\455wdl\appdata\local\temp\AcPublish_2172\E0.x.dwg
Jul 30, 2014 - 2:47pm

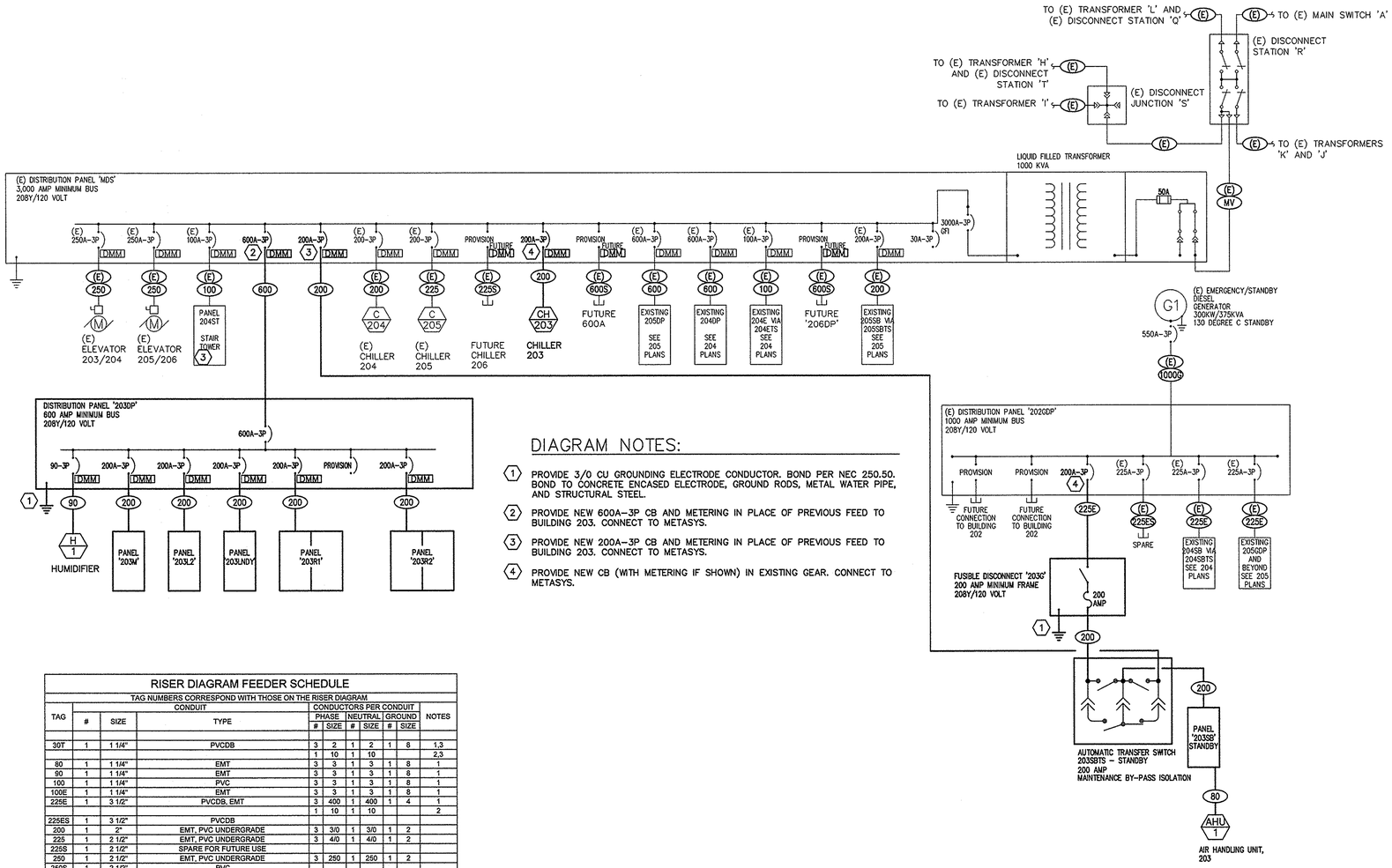

DIAGRAM NOTES:

1. PROVIDE 3/0 CU GROUNDING ELECTRODE CONDUCTOR. BOND PER NEC 250.50. BOND TO CONCRETE ENCASED ELECTRODE, GROUND RODS, METAL WATER PIPE, AND STRUCTURAL STEEL.
2. PROVIDE NEW 600A–3P CB AND METERING IN PLACE OF PREVIOUS FEED TO BUILDING 203. CONNECT TO METASYS.
3. PROVIDE NEW 200A–3P CB AND METERING IN PLACE OF PREVIOUS FEED TO BUILDING 203. CONNECT TO METASYS.
4. PROVIDE NEW CB (WITH METERING IF SHOWN) IN EXISTING GEAR. CONNECT TO METASYS.

RISER DIAGRAM FEEDER SCHEDULE

TAG NUMBERS CORRESPOND WITH THOSE ON THE RISER DIAGRAM

TAG	CONDUIT #	CONDUIT SIZE	CONDUIT TYPE	CONDUCTORS PER CONDUIT: PHASE #	PHASE SIZE	NEUTRAL #	NEUTRAL SIZE	GROUND #	GROUND SIZE	NOTES
30T	1	1 1/4"	PVCDB	3	2	1	2	1	8	1,3
				1	10	1	10			2,3
80	1	1 1/4"	EMT	3	3	1	3	1	8	1
90	1	1 1/4"	EMT	3	3	1	3	1	8	1
100	1	1 1/4"	PVC	3	3	1	3	1	8	1
100E	1	1 1/4"	EMT	3	3	1	3	1	8	1
225E	1	3 1/2"	PVCDB, EMT	3	4/0	1	4/0	1	4	1
				1	10	1	10			2
225ES	1	3 1/2"	PVCDB							
200	1	2"	EMT, PVC UNDERGRADE	3	3/0	1	3/0	1	2	
225	1	2 1/2"	EMT, PVC UNDERGRADE	3	4/0	1	4/0	1	2	
225S	1	2 1/2"	SPARE FOR FUTURE USE							
250	1	2 1/2"	EMT, PVC UNDERGRADE	3	250	1	250	1	2	
250S	1	2 1/2"	PVC							
600	2	3"	EMT	3	350	1	350	1	1	
1000G	3	3"	EMT	3	350	1	350	1	2/0	
600S	3	3"	PVC							4
MV	1	4"	PVCDB, GRS WHERE EXPOSED	3	350			1	2	5
MVS	1	4"	PVCDB, GRS WHERE EXPOSED							

NOTES:
1) CONDUCTORS ARE SIZED FOR VOLTAGE DROP
2) GENERATOR STARTING CIRCUIT TO BE INCLUDED IN CONDUIT.
3) REMOVE CIRCUIT AFTER PERMENANT CIRCUIT IS INSTALLED AND ENERGIZED
4) COUNT INCLUDES ONE SPARE CONDUIT FOR FUTURE FLEXIBILITY
5) PHASE CONDUCTORS: 15KV CU EPR UNGROUNDED; GROUND: CU THW 600V FOR SHIELD GROUND

CONDUIT TYPE NOTES:
PVC PVC UNDERGRADE
PVCDB PVC IN DUCTBANK
EMT ELECTRICAL METALLIC TUBING
GRS GALVANIZED RIGID STEEL

TAG SUFFIX:
E EMERGENCY POWER FEEDER
G GENERATOR FEEDER
S SPARE CONDUIT DESIGNED FOR FUTURE LOAD
T TEMPORARY FEEDER

EXITING SWITCHBOARD SCHEDULE

PANEL NAME: MDS LOCATION: OUTSIDE 204 STAIRTOWER
VOLTAGE: 208Y/120 VOLT, 3PH, 4 WIRE
INTERIOR: MAIN C.B
MOUNTING: FREESTANDING
FEED: BOTTOM
MISC.

FEEDERS: EXISTING. SEE ELECTRICAL DISTRIBUTION ONE-LINE DIAGRAM.
MAIN BUS: 3000 AMPS
MAIN C.B.: 3000 AMPS
MIN. AIC: 65,000 AMPS

SPECIAL C.B. OPTIONS S.O.: DMM = DIGITAL METERING SEE SPECIFICATION SECTION 251010; EDM = EXISTING METER

CKT #	LOAD DESCRIPTION	C.B. TRIP	#P	S.O.	VOLTAMPS PER PHASE A	B	C	VOLTAMPS PER PHASE A	B	C	C.B. TRIP	#P	S.O.	LOAD DESCRIPTION	CKT #
								65880							
1	EXISTING 203/204 ELEVATOR	250	3	EDM	21120	21120			63164		600	3	EDM	EXISTING PANEL 204DP	8
							21120			63938					
2	EXISTING 205/206 ELEVATOR	250	3	EDM	21120	21120		62071							
							21120		61405		600	3	DMM	PANEL 203DP	9
3	EXISTING STAIR TOWER PANEL 204ST	100	3	EDM	1740	1030				61376					
							1330	68637							
4	PANEL 203SB	200	3	DMM	12368	13138			65179		600	3	EDM	EXISTING PANEL 205DP	10
							12716			62311					
5	EXISTING CHILLER 204	200	3	EDM	20064	20064								PROVISION WITH SPACE FOR DMM FUTURE 206 PANEL 206DP	11
							20064				600	3			
6	EXISTING CHILLER 205	200	3	EDM	20064	20064								PROVISION WITH SPACE FOR DMM FUTURE CHILLER 206	12
							20064				200	3			
7	EXISTING PANEL 204E	225	3	EDM	4834	4888		25440							
							4700		25440		200	3	DMM	CHILLER 203	13
	SUB-TOTAL PHASE LOADS				101310	101522	101114			25440					
															14
								222008	215168	213065	SUB-TOTAL PHASE LOADS				

CONNECTED LOADS:

PHASE A:	323318 VA	---------	2694 A
PHASE B:	316710 VA	---------	2639 A
PHASE C:	314179 VA	---------	2618 A
TOTAL:	954207 VA	---------	2651 A

LOADS BY DEMAND TYPE

LONG CONTINUOUS:	93635	VA
RECEPTACLE:	324860	VA
NON-CONTINUOUS:	535712	VA
TOTAL:	954207	VA

DEMAND FACTOR LOAD CALCULATIONS:

LONG CONTINUOUS @ 125%:	117044	VA
1ST 10KVA RECEPT. @ 100%:	10000	VA
REMAINING RECEPT. @ 50%:	157430	VA
NON-CONTINUOUS @ 100%:	535712	VA
TOTAL:	820186	VA
	2278.29	A

SWITCHBOARD SCHEDULE

PANEL NAME: 203DP LOCATION: BASEMENT
VOLTAGE: 208Y/120 VOLT, 3PH, 4 WIRE
INTERIOR: MAIN LUGS ONLY
MOUNTING: SURFACE
FEED: TOP
MISC. SEE SPECIFICATIONS FOR REQUIREMENTS.
ALL BUSSES SHALL BE COPPER; ALL CIRCUIT BREAKERS SHALL BE FURNISHED WITH INTERGAL LOCK-OUT

FEEDERS: SEE ELECTRICAL DISTRIBUTION ONE-LINE DIAGRAM
MAIN BUS: 600 AMPS
MAIN C.B.: 600 AMPS
MIN. AIC: 22000 AMPS

SPECIAL C.B. OPTIONS S.O.: DMM = DIGITAL METERING SEE SPECIFICATION SECTION 251010

CKT #	LOAD DESCRIPTION	C.B. TRIP	#P	S.O.	VOLTAMPS PER PHASE A	B	C	VOLTAMPS PER PHASE A	B	C	C.B. TRIP	#P	S.O.	LOAD DESCRIPTION	CKT #
					2016			10125							
1	PANEL 203M	200	3	DMM		2410			10125		200	3	DMM	PANEL 203LNDY LAUNDRY ROOM	7
							1546			9550					
2	PANEL 203R1	200	3	DMM	19160	19740								PROVISION	8
							20640								
3	PANEL 203R2	200	3	DMM	18680	17040								PROVISION	9
							18680								
4	PANEL 203L2	200	3	DMM	3330	3330									
							2200								
5	HUMIDIFIER H-1	90	3	DMM	8760	8760									
							8760								
6	PROVISION														
	SUB-TOTAL PHASE LOADS				51946	51280	51826	10125	10125	9550	SUB-TOTAL PHASE LOADS				

CONNECTED LOADS:

PHASE A:	62071 VA	---------	517 A
PHASE B:	61405 VA	---------	512 A
PHASE C:	61376 VA	---------	511 A
TOTAL:	184852 VA	---------	513 A

LOADS BY DEMAND TYPE

LONG CONTINUOUS:	8860	VA
RECEPTACLE:	117900	VA
NON-CONTINUOUS:	58092	VA
TOTAL:	184852	VA

DEMAND FACTOR LOAD CALCULATIONS:

LONG CONTINUOUS @ 125%:	11075	VA
1ST 10KVA RECEPT. @ 100%:	10000	VA
REMAINING RECEPT. @ 50%:	53950	VA
NON-CONTINUOUS @ 100%:	58092	VA
TOTAL:	133117	VA
	369.77	A

1 ELECTRICAL POWER DISTRIBUTION DIAGRAM

SCALE: NOT TO SCALE

REVISIONS	DATE

REGISTERED PROFESSIONAL ENGINEER 74816PE OREGON MARCH 6, 2003 WILLIAM D. LOMICA
RENEWAL DATE: 12-31-2014

kistler+small+white architects

RAYMOND KISTLER, ARCHITECT
552 A STREET
ASHLAND, OREGON 97520
P: 541-488-8200
F: 541-552-9512
www.kistlersmallwhite.com

DEPARTMENT OF VETERANS AFFAIRS
SOUTHERN OREGON REHABILITATION CENTER & CLINICS
8495 CRATER LAKE HIGHWAY
WHITE CITY, OREGON

DRAWING TITLE:
ELECTRICAL POWER DISTRIBUTION DIAGRAM AND PANEL SCHEDULES

FULLY SPRINKLERED FACILITY

MAI Project Number: 13-1130
MARQUESS & ASSOCIATES INC
P: 541-772-7115
F: 541-779-4079
1120 East Jackson
PO Box 490
Medford, OR, 97501

PROJECT TITLE: REPLACE DOM BLDG. 203

DRAWN BY:	DATE:	DRAWING NO.:
WDL	4 AUGUST 2014	E0.2
CHECK BY: WDL	VA PROJECT NO.: 692-339	DWG. 2 OF 27

US DEPARTMENT OF VETERANS AFFAIRS

C:\Users\VA55ewl\appdata\local\temp\AcPublish_2172\D\x.dwg
Jul 30, 2014 - 2:47pm

PANEL SCHEDULE

PANEL NAME: 203M LOCATION: BASEMENT
VOLTAGE: 208Y/120 VOLT, 3PH, 4 WIRE
INTERIOR: MAIN LUGS ONLY
MOUNTING: SURFACE
FEED: BOTTOM
MISC. SEE SPECIFICATIONS FOR REQUIREMENTS. ALL CIRCUIT BREAKERS SHALL BE FURNISHED WITH INTERGAL LOCK-OUT
ALL BUSSES SHALL BE COPPER; DOOR-IN-DOOR;
SPECIAL C.B. OPTIONS S.O.:

FEEDERS: SEE ELECTRICAL DISTRIBUTION ONE-LINE DIAGRAM
MAIN BUS: 225 AMPS MINIMUM
MAIN C.B.: NONE
MIN. AIC: 22000 AMPS

CKT #	LOAD DESCRIPTION	C.B. TRIP	C.B. #P	C.B. S.O.	VOLTAMPS PER PHASE A	B	C	VOLTAMPS PER PHASE A	B	C	C.B. TRIP	#P	S.O.	LOAD DESCRIPTION	CKT #
1	CHILLER RECEPTACLES	20	1		360			480			20	2		PUMP P-5	2
3	IRRIGATION CONTROLLERS	20	1			720			826					PUMPS P-6	4
5	IRRIGATION CONTROLLERS	20	1				720			826	20	1		TWO PUMPS	6
7	SPARE	20	1					1176			15	1		PUMP P-7	8
9	SPARE	20	1						864		20	1		PUMP CP-1	10
11	SPARE	20	1								20	1		SPARE	12
13	SPARE	20	1								20	1		SPARE	14
15	SPARE	20	1								20	1		SPARE	16
17	SPARE	20	1								20	1		SPARE	18
19	SPARE	20	1								20	1		SPARE	20
21	SPARE	20	1								20	1		SPARE	22
23	SPARE	20	1								20	1		SPARE	24
25	SPARE	20	1								20	1		SPARE	26
27	SPARE	20	1								20	1		SPARE	28
29	SPARE	20	1								20	1		SPARE	30
31	SPARE	20	1								20	1		SPARE	32
33	SPARE	20	1								20	1		SPARE	34
35	SPARE	20	1								20	1		SPARE	36
37	SPARE	20	1								20	1		SPARE	38
39	SPARE	20	1								20	1		SPARE	40
41	SPARE	20	1								20	1		SPARE	42
	SUB-TOTAL PHASE LOADS				360	720	720	1656	1690	826	SUB-TOTAL PHASE LOADS				

CONNECTED LOADS:			LOADS BY DEMAND TYPE		DEMAND FACTOR LOAD CALCULATIONS:	
PHASE A:	2016 VA	17 A	LONG CONTINUOUS:	0 VA	LONG CONTINUOUS @ 125%:	0 VA
PHASE B:	2410 VA	20 A	RECEPTACLE:	360 VA	1ST 10KVA RECEPT. @ 100%:	360 VA
PHASE C:	1546 VA	13 A	NON-CONTINUOUS:	5612 VA	REMAINING RECEPT. @ 50%:	0 VA
					NON-CONTINUOUS @ 100%:	5612 VA
TOTAL:	5972 VA	17 A	TOTAL:	5972 VA	TOTAL:	5972 VA
						16.59 A

PANEL SCHEDULE

PANEL NAME: 203LNDY LOCATION: FIRST FLOOR ELEC RM
VOLTAGE: 208Y/120 VOLT, 3PH, 4 WIRE
INTERIOR: MAIN LUGS ONLY
MOUNTING: SURFACE
FEED: BOTTOM
MISC. SEE SPECIFICATIONS FOR REQUIREMENTS.
ALL BUSSES SHALL BE COPPER; DOOR-IN-DOOR; ALL CIRCUIT BREAKERS SHALL BE FURNISHED WITH INTERGAL LOCK-OUT
SPECIAL C.B. OPTIONS S.O.:

FEEDERS: SEE ELECTRICAL DISTRIBUTION ONE-LINE DIAGRAM
MAIN BUS: 200 AMPS
MAIN C.B.: NONE
MIN. AIC: 22000 AMPS

CKT #	LOAD DESCRIPTION	C.B. TRIP	C.B. #P	C.B. S.O.	VOLTAMPS PER PHASE A	B	C	VOLTAMPS PER PHASE A	B	C	C.B. TRIP	#P	S.O.	LOAD DESCRIPTION	CKT #
1	DRYER	30	2		2375			1200			20	1		RECEPTACLES	2
3						2375			1200		20	1		RECEPTACLES	4
5	DRYER	30	2				2375			1200	20	1		RECEPTACLES	6
7					2375						20	1		SPARE	8
9	DRYER	30	2			2375					20	1		SPARE	10
11							2375				20	1		SPARE	12
13	DRYER	30	2		2375						20	1		SPARE	14
15						2375					20	1		SPARE	16
17	WASHER	20	1				1800				20	1		SPARE	18
19	WASHER	20	1		1800						20	1		SPARE	20
21	WASHER	20	1			1800					20	1		SPARE	22
23	WASHER	20	1				1800				20	1		SPARE	24
25	SPARE	20	1								20	1		SPARE	26
27	SPARE	20	1								20	1		SPARE	28
29	SPARE	20	1								20	1		SPARE	30
31	SPARE	20	1								20	1		SPARE	32
33	SPARE	20	1								20	1		SPARE	34
35	SPARE	20	1								20	1		SPARE	36
37	SPARE	20	1								20	1		SPARE	38
39	SPARE	20	1								20	1		SPARE	40
41	SPARE	20	1								20	1		SPARE	42
	SUB-TOTAL PHASE LOADS				8925	8925	8350	1200	1200	1200	SUB-TOTAL PHASE LOADS				

CONNECTED LOADS:			LOADS BY DEMAND TYPE		DEMAND FACTOR LOAD CALCULATIONS:	
PHASE A:	10125 VA	84 A	LONG CONTINUOUS:	0 VA	LONG CONTINUOUS @ 125%:	0 VA
PHASE B:	10125 VA	84 A	RECEPTACLE:	3600 VA	1ST 10KVA RECEPT. @ 100%:	3600 VA
PHASE C:	9550 VA	80 A	NON-CONTINUOUS:	26200 VA	REMAINING RECEPT. @ 50%:	0 VA
					NON-CONTINUOUS @ 100%:	26200 VA
TOTAL:	29800 VA	83 A	TOTAL:	29800 VA	TOTAL:	29800 VA
						82.78 A

EXISTING PANEL- PANEL SCHEDULE - EMERGENCY SYSTEM

PANEL NAME: 204E LOCATION: STAIR TOWER ELEC RM
VOLTAGE: 208Y/120 VOLT, 3PH, 4 WIRE
INTERIOR: MAIN LUGS ONLY
MOUNTING: SURFACE
FEED: TOP
MISC. SEE SPECIFICATIONS FOR REQUIREMENTS. ALL CIRCUIT BREAKERS SHALL BE FURNISHED WITH INTERGAL LOCK-OUT
ALL BUSSES SHALL BE COPPER; DOOR-IN-DOOR;
SPECIAL C.B. OPTIONS S.O.: NEW= PROVIDE NEW CIRCUIT BREAKER IN THIS EXISTING PANEL POSITION
BREAKERS SHALL BE SIEMENS NGB FRAME FOR COORDINATION

FEEDERS: SEE ELECTRICAL DISTRIBUTION ONE-LINE DIAGRAM
MAIN BUS: 100 AMPS
MAIN C.B.: NONE AMPS
MIN. AIC: 10,000 AMPS

CKT #	LOAD DESCRIPTION	C.B. TRIP	C.B. #P	C.B. S.O.	VOLTAMPS PER PHASE A	B	C	VOLTAMPS PER PHASE A	B	C	C.B. TRIP	#P	S.O.	LOAD DESCRIPTION	CKT #
1	NETWORK ROOM	20	1		1800			1334			20	1		204 EM LIGHTS BASEMENT/FIRST FLR	2
3	NETWORK ROOM	20	1			1800			1488		20	1		204 EM LIGHTS SECOND FLR/ATTIC	4
5	NETWORK ROOM	20	1				1800			1200	20	1		204 DOOR CONTROL	6
7	FIRE ALARM CONTROL PANEL	20	1		500			1250			20	1	NEW	B203 EM LIGHTS BASEMENT	8
9	FIRE ALARM CONTROL PANEL	20	1			500			1300		20	1	NEW	B203 EM LIGHTS FLOOR 1	10
11	FIRE ALARM CONTROL PANEL	20	1				500			800	20	1	NEW	B203 EM LIGHTS FLOOR 2	12
13	B203 FIRE ALARM CONTROL PANEL	20	1	NEW	500			420			20	1	NEW	B203 EM LIGHTS EXTERIOR	14
15	B203 FIRE ALARM SIGNAL PANEL	20	1	NEW		500			900		20	1	NEW	B203 EM ATTIC	16
17	B203 FIRE ALARM SIGNAL PANEL	20	1	NEW			500				20	1	NEW	SPARE	18
19	B203 FIRE ALARM SIGNAL PANEL	20	1	NEW	500						20	1	NEW	SPARE	20
21	B203 FIRE ALARM SIGNAL PANEL	20	1	NEW		500					20	1	NEW	SPARE	22
23	B203 DOOR CONTROL	20	1	NEW			1200				20	1	NEW	SPARE	24
25	B203 FIRE SMOKE DAMPERS FLOOR 1	20	1	NEW	500						20	1		PROVISION	26
27	B203 FIRE SMOKE DAMPERS FLOOR 2	20	1	NEW		500					20	1		PROVISION	28
29	PROVISION	20	1								20	1		PROVISION	30
31	PROVISION	20	1								20	1		PROVISION	32
33	PROVISION	20	1								20	1		PROVISION	34
35	PROVISION	20	1								20	1		PROVISION	36
37	PROVISION	20	1								20	1		PROVISION	38
39	PROVISION	20	1								20	1		PROVISION	40
41	PROVISION	20	1								20	1		PROVISION	42
	SUB-TOTAL PHASE LOADS				3800	3800	4000	3004	3688	2000	SUB-TOTAL PHASE LOADS				

CONNECTED LOADS:			LOADS BY DEMAND TYPE		DEMAND FACTOR LOAD CALCULATIONS:	
PHASE A:	6804 VA	57 A	LONG CONTINUOUS:	10942 VA	LONG CONTINUOUS @ 125%:	13678 VA
PHASE B:	7488 VA	62 A	RECEPTACLE:	0 VA	1ST 10KVA RECEPT. @ 100%:	0 VA
PHASE C:	6000 VA	50 A	NON-CONTINUOUS:	9350 VA	REMAINING RECEPT. @ 50%:	0 VA
					NON-CONTINUOUS @ 100%:	9350 VA
TOTAL:	20292 VA	56 A	TOTAL:	20292 VA	TOTAL:	23028 VA
						63.97 A

PANEL SCHEDULE

PANEL NAME: 203R1 LOCATION: FIRST FLOOR ELEC RM
VOLTAGE: 208Y/120 VOLT, 3PH, 4 WIRE
INTERIOR: MAIN LUGS ONLY
MOUNTING: SURFACE
FEED: BOTTOM (FIRST SECTION)
MISC. SEE SPECIFICATIONS FOR REQUIREMENTS. CONNECT TWO 42-C.B. SECTIONS VIA FEED-THRU LUGS. FIRST SECTION HAS MAIN C.B.
ALL BUSSES SHALL BE COPPER; DOOR-IN-DOOR; FEED-THRU LUGS; ALL CIRCUIT BREAKERS SHALL BE FURNISHED WITH INTERGAL LOCK-OUT
SPECIAL C.B. OPTIONS S.O.: "GF" = GROUND FAULT CIRCUIT INTERRUPTER;
"AFI" = ARC-FAULT CIRCUIT INTERRUPTER

FEEDERS: SEE ELECTRICAL DISTRIBUTION ONE-LINE DIAGRAM
MAIN BUS: 200 AMPS
MAIN C.B.: NONE
MIN. AIC: 22000 AMPS

CKT #	LOAD DESCRIPTION	C.B. TRIP	C.B. #P	C.B. S.O.	VOLTAMPS PER PHASE A	B	C	VOLTAMPS PER PHASE A	B	C	C.B. TRIP	#P	S.O.	LOAD DESCRIPTION	CKT #
1	RECEPTACLES BATHROOM	20	1	AFI	180			1800			20	1	AFI	RECEPTACLES BEDROOM	2
3	RECEPTACLES BATHROOM	20	1			180			1800		20	1	AFI	RECEPTACLES BEDROOM	4
5	RECEPTACLES BATHROOM	20	1				180			1800	20	1	AFI	RECEPTACLES BEDROOM	6
7	RECEPTACLES BATHROOM	20	1		180			1800			20	1	AFI	RECEPTACLES BEDROOM	8
9	RECEPTACLES BATHROOM	20	1			180			1800		20	1	AFI	RECEPTACLES BEDROOM	10
11	RECEPTACLES BATHROOM	20	1				180			1800	20	1	AFI	RECEPTACLES BEDROOM	12
13	RECEPTACLES BATHROOM	20	1		180			1800			20	1	AFI	RECEPTACLES BEDROOM	14
15	RECEPTACLES BATHROOM	20	1			180			1800		20	1	AFI	RECEPTACLES BEDROOM	16
17	RECEPTACLES BATHROOM	20	1				180			1800	20	1	AFI	RECEPTACLES BEDROOM	18
19	RECEPTACLES BATHROOM	20	1		180			1800			20	1	AFI	RECEPTACLES BEDROOM	20
21	RECEPTACLES BATHROOM	20	1			180			1800		20	1	AFI	RECEPTACLES BEDROOM	22
23	RECEPTACLES BATHROOM	20	1				180			1800	20	1	AFI	RECEPTACLES BEDROOM	24
25	RECEPTACLES BATHROOM	20	1		180			1800			20	1	AFI	RECEPTACLES BEDROOM	26
27	RECEPTACLES BATHROOM	20	1			180			1800		20	1	AFI	RECEPTACLES BEDROOM	28
29	RECEPTACLES BATHROOM	20	1				180			1800	20	1	AFI	RECEPTACLES BEDROOM	30
31	RECEPTACLES BATHROOM	20	1		180			1800			20	1	AFI	RECEPTACLES BEDROOM	32
33	RECEPTACLES BATHROOM	20	1			180			1800		20	1	AFI	RECEPTACLES BEDROOM	34
35	RECEPTACLES BATHROOM	20	1				180			1800	20	1	AFI	RECEPTACLES BEDROOM	36
37	RECEPTACLES BATHROOM	20	1		180			1800			20	1	AFI	RECEPTACLES BEDROOM	38
39	RECEPTACLES BATHROOM	20	1			180			1800		20	1	AFI	RECEPTACLES BEDROOM	40
41	RECEPTACLES BATHROOM	20	1				180			1800	20	1	AFI	RECEPTACLES BEDROOM	42
43	RECEPTACLES BATHROOM	20	1		180			1800			20	1	AFI	RECEPTACLES BEDROOM	44
45	BASEMENT RECEPTACLES	20	1	GF		1440					20	1		SPARE	46
47	BASEMENT RECEPTACLES	20	1	GF			1440				20	1		SPARE	48
49	SPARE	20	1								20	1		SPARE	50
51	SPARE	20	1								20	1		SPARE	52
53	SPARE	20	1								20	1		SPARE	54
55	SPARE	20	1								20	1		SPARE	56
57	SPARE	20	1								20	1		SPARE	58
59	SPARE	20	1								20	1		SPARE	60
61	SPARE	20	1								20	1		SPARE	62
63	SPARE	20	1								20	1		SPARE	64
65	SPARE	20	1								20	1		SPARE	66
67	SPARE	20	1					1200			20	1		RECEPTACLES ROOM 174	68
69	SPARE	20	1						540		20	1		RECEPTACLES ROOM 174	70
71	SPARE	20	1							900	20	1		RECEPTACLES ROOM 174	72
73	SPARE	20	1					900			20	1		RECEPTACLES ROOM 102	74
75	RECEPTACLES TELEVISION ROOM	20	1			1080			720		20	1		RECEPTACLES ROOM 103	76
77	RECEPTACLES TELEVISION ROOM	20	1				1080			1440	20	1		RECEPTACLES ROOMS 122, 123, 124, 125	78
79	RECEPTACLES WEST HALL	20	1		720			500			20	1		WATER FOUNTAIN	80
81	RECEPTACLES CENTRAL HALL	20	1			900			1200		20	1		RECEPTACLES ROOM C1A	82
83	RECEPTACLES EAST HALL	20	1				720			1200	20	1		RECEPTACLES ROOM C1A	84
	SUB-TOTAL PHASE LOADS				2160	4680	4500	17000	15060	16140	SUB-TOTAL PHASE LOADS				

CONNECTED LOADS:			LOADS BY DEMAND TYPE		DEMAND FACTOR LOAD CALCULATIONS:	
PHASE A:	19160 VA	160 A	LONG CONTINUOUS:	0 VA	LONG CONTINUOUS @ 125%:	0 VA
PHASE B:	19740 VA	165 A	RECEPTACLE:	59540 VA	1ST 10KVA RECEPT. @ 100%:	10000 VA
PHASE C:	20640 VA	172 A	NON-CONTINUOUS:	0 VA	REMAINING RECEPT. @ 50%:	24770 VA
					NON-CONTINUOUS @ 100%:	0 VA
TOTAL:	59540 VA	165 A	TOTAL:	59540 VA	TOTAL:	34770 VA
						96.58 A

PANEL SCHEDULE

PANEL NAME: 203R2 LOCATION: SECOND FLOOR ELEC RM
VOLTAGE: 208Y/120 VOLT, 3PH, 4 WIRE
INTERIOR: MAIN LUGS ONLY
MOUNTING: SURFACE
FEED: BOTTOM (FIRST SECTION)
MISC. SEE SPECIFICATIONS FOR REQUIREMENTS. CONNECT TWO 42-C.B. SECTIONS VIA FEED-THRU LUGS. FIRST SECTION HAS MAIN C.B.
ALL BUSSES SHALL BE COPPER; DOOR-IN-DOOR; FEED-THRU LUGS; ALL CIRCUIT BREAKERS SHALL BE FURNISHED WITH INTERGAL LOCK-OUT
SPECIAL C.B. OPTIONS S.O.: "GF" = GROUND FAULT CIRCUIT INTERRUPTER;
"AFI" = ARC-FAULT CIRCUIT INTERRUPTER

FEEDERS: SEE ELECTRICAL DISTRIBUTION ONE-LINE DIAGRAM
MAIN BUS: 200 AMPS
MAIN C.B.: NONE
MIN. AIC: 22000 AMPS

CKT #	LOAD DESCRIPTION	C.B. TRIP	C.B. #P	C.B. S.O.	VOLTAMPS PER PHASE A	B	C	VOLTAMPS PER PHASE A	B	C	C.B. TRIP	#P	S.O.	LOAD DESCRIPTION	CKT #
1	RECEPTACLES BATHROOM	20	1		180			1800			20	1	AFI	RECEPTACLES BEDROOM	2
3	RECEPTACLES BATHROOM	20	1			180			1800		20	1	AFI	RECEPTACLES BEDROOM	4
5	RECEPTACLES BATHROOM	20	1				180			1800	20	1	AFI	RECEPTACLES BEDROOM	6
7	RECEPTACLES BATHROOM	20	1		180			1800			20	1	AFI	RECEPTACLES BEDROOM	8
9	RECEPTACLES BATHROOM	20	1			180			1800		20	1	AFI	RECEPTACLES BEDROOM	10
11	RECEPTACLES BATHROOM	20	1				180			1800	20	1	AFI	RECEPTACLES BEDROOM	12
13	RECEPTACLES BATHROOM	20	1		180			1800			20	1	AFI	RECEPTACLES BEDROOM	14
15	RECEPTACLES BATHROOM	20	1			180			1800		20	1	AFI	RECEPTACLES BEDROOM	16
17	RECEPTACLES BATHROOM	20	1				180			1800	20	1	AFI	RECEPTACLES BEDROOM	18
19	RECEPTACLES BATHROOM	20	1		180			1800			20	1	AFI	RECEPTACLES BEDROOM	20
21	RECEPTACLES BATHROOM	20	1			180			1800		20	1	AFI	RECEPTACLES BEDROOM	22
23	RECEPTACLES BATHROOM	20	1				180			1800	20	1	AFI	RECEPTACLES BEDROOM	24
25	RECEPTACLES BATHROOM	20	1		180			1800			20	1	AFI	RECEPTACLES BEDROOM	26
27	RECEPTACLES BATHROOM	20	1			180			1800		20	1	AFI	RECEPTACLES BEDROOM	28
29	RECEPTACLES BATHROOM	20	1				180			1800	20	1	AFI	RECEPTACLES BEDROOM	30
31	RECEPTACLES BATHROOM	20	1		180			1800			20	1	AFI	RECEPTACLES BEDROOM	32
33	RECEPTACLES BATHROOM	20	1			180			1800		20	1	AFI	RECEPTACLES BEDROOM	34
35	RECEPTACLES BATHROOM	20	1				180			1800	20	1	AFI	RECEPTACLES BEDROOM	36
37	RECEPTACLES BATHROOM	20	1		180			1800			20	1	AFI	RECEPTACLES BEDROOM	38
39	RECEPTACLES BATHROOM	20	1			180			1800		20	1	AFI	RECEPTACLES BEDROOM	40
41	RECEPTACLES BATHROOM	20	1				180			1800	20	1	AFI	RECEPTACLES BEDROOM	42
43	RECEPTACLES BATHROOM	20	1		180			1800			20	1	AFI	RECEPTACLES BEDROOM	44
45	SPARE	20	1								20	1		SPARE	46
47	SPARE	20	1								20	1		SPARE	48
49	SPARE	20	1								20	1		SPARE	50
51	SPARE	20	1								20	1		SPARE	52
53	SPARE	20	1								20	1		SPARE	54
55	SPARE	20	1								20	1		SPARE	56
57	SPARE	20	1								20	1		SPARE	58
59	SPARE	20	1								20	1		SPARE	60
61	SPARE	20	1								20	1		SPARE	62
63	SPARE	20	1								20	1		SPARE	64
65	SPARE	20	1								20	1		SPARE	66
67	RECEPTACLES ROOM 275	20	1		540						20	1		SPARE	68
69	RECEPTACLES ROOM 213	20	1			540					20	1		SPARE	70
71	RECEPTACLES TELEVISION ROOM	20	1				1280				20	1		SPARE	72
73	RECEPTACLES TELEVISION ROOM	20	1		1080						20	1		SPARE	74
75	RECEPTACLES WEST HALL	20	1			720					20	1		SPARE	76
77	RECEPTACLES CENTRAL HALL	20	1				900			900	20	1		RECEPTACLES ROOM 202	78
79	RECEPTACLES EAST HALL	20	1		720			500			20	1		DRINKING FOUNTAIN	80
81	RECEPTACLES ATTIC	20	1			720			1200		20	1		STORAGE 201	82
83	RECEPTACLES ATTIC	20	1				540			1200	20	1		STORAGE 201	84
	SUB-TOTAL PHASE LOADS				3780	3240	3980	14900	13800	14700	SUB-TOTAL PHASE LOADS				

CONNECTED LOADS:			LOADS BY DEMAND TYPE		DEMAND FACTOR LOAD CALCULATIONS:	
PHASE A:	18680 VA	156 A	LONG CONTINUOUS:	0 VA	LONG CONTINUOUS @ 125%:	0 VA
PHASE B:	17040 VA	142 A	RECEPTACLE:	54400 VA	1ST 10KVA RECEPT. @ 100%:	10000 VA
PHASE C:	18680 VA	156 A	NON-CONTINUOUS:	0 VA	REMAINING RECEPT. @ 50%:	22200 VA
					NON-CONTINUOUS @ 100%:	0 VA
TOTAL:	54400 VA	151 A	TOTAL:	54400 VA	TOTAL:	32200 VA
						89.44 A

PANEL SCHEDULE

PANEL NAME: 203L2 LOCATION: SECOND FLOOR ELEC RM
VOLTAGE: 208Y/120 VOLT, 3PH, 4 WIRE
INTERIOR: MAIN LUGS ONLY
MOUNTING: SURFACE
FEED: BOTTOM
MISC. SEE SPECIFICATIONS FOR REQUIREMENTS. ALL CIRCUIT BREAKERS SHALL BE FURNISHED WITH INTERGAL LOCK-OUT
ALL BUSSES SHALL BE COPPER; DOOR-IN-DOOR;
SPECIAL C.B. OPTIONS S.O.:

FEEDERS: SEE ELECTRICAL DISTRIBUTION ONE-LINE DIAGRAM
MAIN BUS: 200 AMPS
MAIN C.B.: NONE
MIN. AIC: 22000 AMPS

CKT #	LOAD DESCRIPTION	C.B. TRIP	C.B. #P	C.B. S.O.	VOLTAMPS PER PHASE A	B	C	VOLTAMPS PER PHASE A	B	C	C.B. TRIP	#P	S.O.	LOAD DESCRIPTION	CKT #
1	1ST FLOOR SOUTHEAST WING LIGHTING	20	1		1100						20	1		SPARE	2
3	1ST FLOOR NORTHEAST WING LIGHTING	20	1			1100					20	1		SPARE	4
5	1ST FLOOR SOUTHWEST WING LIGHTING	20	1				1100				20	1		SPARE	6
7	1ST FLOOR NORTHWEST WING LIGHTING	20	1		1100						20	1		SPARE	8
9	2ND FLOOR SOUTHEAST WING LIGHTING	20	1			1100					20	1		SPARE	10
11	2ND FLOOR NORTHEAST WING LIGHTING	20	1				1100				20	1		SPARE	12
13	2ND FLOOR SOUTHWEST WING LIGHTING	20	1		1130						20	1		SPARE	14
15	2ND FLOOR NORTHWEST WING LIGHTING	20	1			1130					20	1		SPARE	16
17	SPARE	20	1								20	1		SPARE	18
19	SPARE	20	1								20	1		SPARE	20
21	SPARE	20	1								20	1		SPARE	22
23	SPARE	20	1								20	1		SPARE	24
25	SPARE	20	1								20	1		SPARE	26
27	SPARE	20	1								20	1		SPARE	28
29	SPARE	20	1								20	1		SPARE	30
31	SPARE	20	1								20	1		SPARE	32
33	SPARE	20	1								20	1		SPARE	34
35	SPARE	20	1								20	1		SPARE	36
37	SPARE	20	1								20	1		SPARE	38
39	SPARE	20	1								20	1		SPARE	40
41	SPARE	20	1								20	1		SPARE	42
	SUB-TOTAL PHASE LOADS				3330	3330	2200	0	0	0	SUB-TOTAL PHASE LOADS				

CONNECTED LOADS:			LOADS BY DEMAND TYPE		DEMAND FACTOR LOAD CALCULATIONS:	
PHASE A:	3330 VA	28 A	LONG CONTINUOUS:	8860 VA	LONG CONTINUOUS @ 125%:	11075 VA
PHASE B:	3330 VA	28 A	RECEPTACLE:	0 VA	1ST 10KVA RECEPT. @ 100%:	0 VA
PHASE C:	2200 VA	18 A	NON-CONTINUOUS:	0 VA	REMAINING RECEPT. @ 50%:	0 VA
					NON-CONTINUOUS @ 100%:	0 VA
TOTAL:	8860 VA	25 A	TOTAL:	8860 VA	TOTAL:	11075 VA
						30.76 A

PANEL SCHEDULE - GENERATOR STANDBY SYSTEM

PANEL NAME: 203SB LOCATION: BASEMENT
VOLTAGE: 208Y/120 VOLT, 3PH, 4 WIRE
INTERIOR: MAIN LUGS ONLY
MOUNTING: SURFACE
FEED: TOP
MISC. SEE SPECIFICATIONS FOR REQUIREMENTS. ALL CIRCUIT BREAKERS SHALL BE FURNISHED WITH INTERGAL LOCK-OUT
ALL BUSSES SHALL BE COPPER; DOOR-IN-DOOR;
SPECIAL C.B. OPTIONS S.O.: DMM = DIGITAL METERING SEE SPECIFICATION SECTION 251010
BREAKERS SHALL BE SIEMENS NGB FRAME FOR COORDINATION

FEEDERS: SEE ELECTRICAL DISTRIBUTION ONE-LINE DIAGRAM
MAIN BUS: 200 AMPS
MAIN C.B.: NONE AMPS
MIN. AIC: 22,000 AMPS

CKT #	LOAD DESCRIPTION	C.B. TRIP	C.B. #P	C.B. S.O.	VOLTAMPS PER PHASE A	B	C	VOLTAMPS PER PHASE A	B	C	C.B. TRIP	#P	S.O.	LOAD DESCRIPTION	CKT #
1	203 AHU-1	50	3	DMM	4740			500			20	1		HVAC CONTROLS	2
3		-	-			4740			500		20	1		HVAC CONTROLS	4
5		-	-				4740			500	20	1		HVAC CONTROLS	6
7	PUMP P-3	15	1		528			1020			20	2		PUMPS P-1	8
9	WASTE WATER PUMPS SP-1A	20	1			1296			1020					TWO PUMPS	10
11	WASTE WATER PUMPS SP-1B	20	1				1296			828	20	3		PUMPS P-2	12
13	STORM WATER PUMP CONTROL PANEL	50	3		4752			828						TWO PUMPS	14
15	FOR SP-2A AND SP-2B					4752			828						16
17							4752			600	20	1		WH-1, P-8	18
19	SPARE	20	1								20	1		SPARE	20
21	SPARE	20	1								20	1		SPARE	22
23	SPARE	20	1								20	1		SPARE	24
25	SPARE	20	1								20	1		SPARE	26
27	SPARE	20	1								20	1		SPARE	28
29	SPARE	20	1								20	1		SPARE	30
31	SPARE	20	1								20	1		SPARE	32
33	SPARE	20	1								20	1		SPARE	34
35	SPARE	20	1								20	1		SPARE	36
37	SPARE	20	1								20	1		SPARE	38
39	SPARE	20	1								20	1		SPARE	40
41	SPARE	20	1								20	1		SPARE	42
	SUB-TOTAL PHASE LOADS				10020	10788	10788	2348	2348	1928	SUB-TOTAL PHASE LOADS				

CONNECTED LOADS:			LOADS BY DEMAND TYPE		DEMAND FACTOR LOAD CALCULATIONS:	
PHASE A:	12368 VA	103 A	LONG CONTINUOUS:	16848 VA	LONG CONTINUOUS @ 125%:	21060 VA
PHASE B:	13136 VA	109 A	RECEPTACLE:	0 VA	1ST 10KVA RECEPT. @ 100%:	0 VA
PHASE C:	12716 VA	106 A	NON-CONTINUOUS:	21372 VA	REMAINING RECEPT. @ 50%:	0 VA
					NON-CONTINUOUS @ 100%:	21372 VA
TOTAL:	38220 VA	106 A	TOTAL:	38220 VA	TOTAL:	42432 VA
						117.87 A

MAI Project Number: 13-1130
MARQUESS & ASSOCIATES INC
P: 541-772-7115
F: 541-779-4079
1120 East Jackson
PO Box 490
Medford, OR, 97501

REVISIONS	DATE

REGISTERED PROFESSIONAL ENGINEER 74818PE
OREGON
WILLIAM D. LOMICA
RENEWAL DATE: 12-31-20

kistler + small + white architects
RAYMOND KISTLER, ARCHITECT
552 A STREET
ASHLAND, OREGON 97520
P: 541-488-8200
F: 541-552-9512
www.kistlersmallwhite.com

DEPARTMENT OF VETERANS AFFAIRS
SOUTHERN OREGON REHABILITATION CENTER & CLINICS
8495 CRATER LAKE HIGHWAY
WHITE CITY, OREGON

DRAWING TITLE:
ELECTRICAL PANEL SCHEDULES

FULLY SPRINKLERED FACILITY

PROJECT TITLE
REPLACE DOM BLDG. 203

DRAWN BY: WDL
DATE: 4 AUGUST 2014
CHECK BY: WDL
VA PROJECT NO.: 692-339
DRAWING NO.: E0.3
DWG. 3 OF 27

US DEPARTMENT OF VETERANS AFFAIRS

Jul 30, 2014 – 2:48pm
...\local\temp\AcPublish_2172\E0.x.dwg

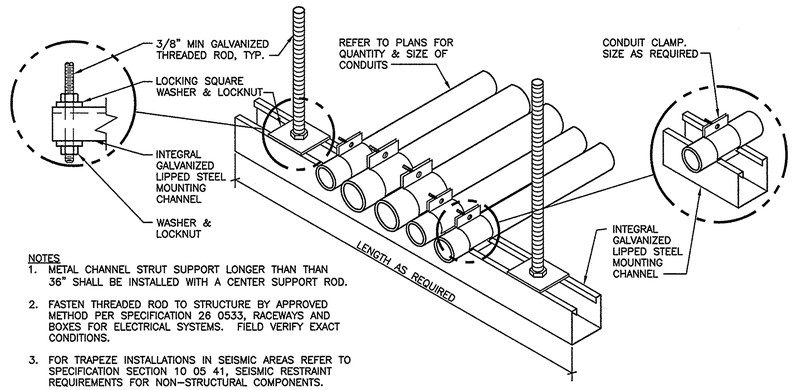

NOTES
1. METAL CHANNEL STRUT SUPPORT LONGER THAN THAN 36" SHALL BE INSTALLED WITH A CENTER SUPPORT ROD.
2. FASTEN THREADED ROD TO STRUCTURE BY APPROVED METHOD PER SPECIFICATION 26 0533, RACEWAYS AND BOXES FOR ELECTRICAL SYSTEMS. FIELD VERIFY EXACT CONDITIONS.
3. FOR TRAPEZE INSTALLATIONS IN SEISMIC AREAS REFER TO SPECIFICATION SECTION 10 05 41, SEISMIC RESTRAINT REQUIREMENTS FOR NON-STRUCTURAL COMPONENTS.

1 CONDUIT TRAPEZE MOUNTING DETAIL
NTS

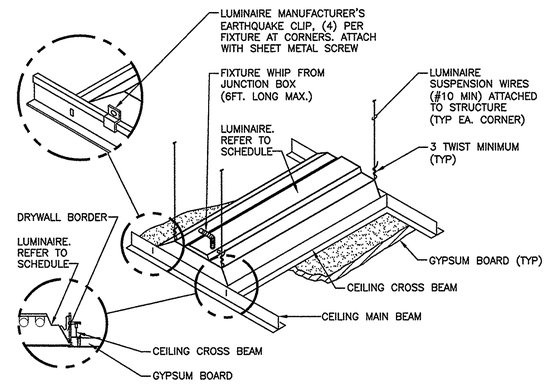

2 LUMINAIRE MOUNTING - GYPBOARD CEILING
NTS

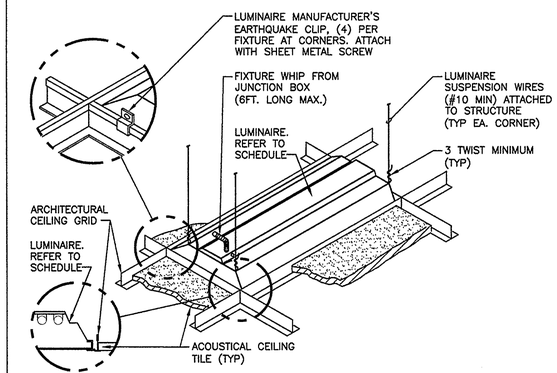

3 LUMINAIRE MOUNTING - LAY-IN CEILING
NTS

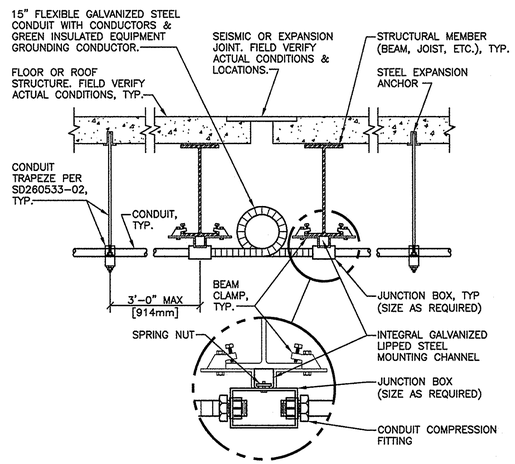

4 CONDUIT JOINT CROSSING DETAIL
NTS

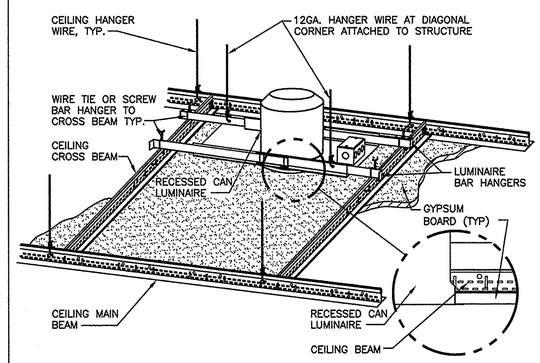

5 DOWNLIGHT MOUNTING - GYPBOARD CEILING
NTS

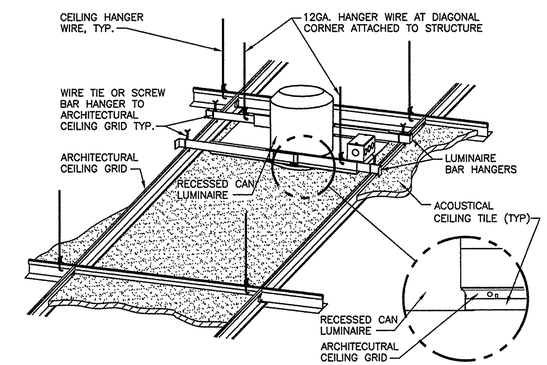

6 DOWNLIGHT MOUNTING - LAY-IN CEILING
NTS

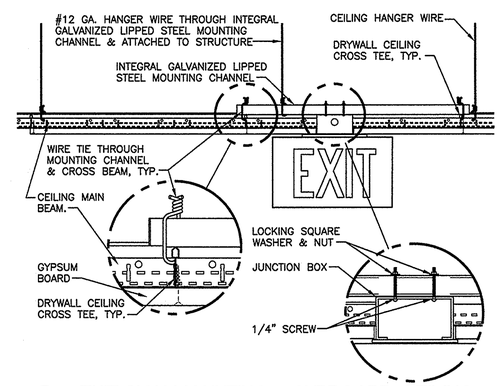

7 EXIT SIGN MOUNTING - GYPBOARD CEILING
NTS

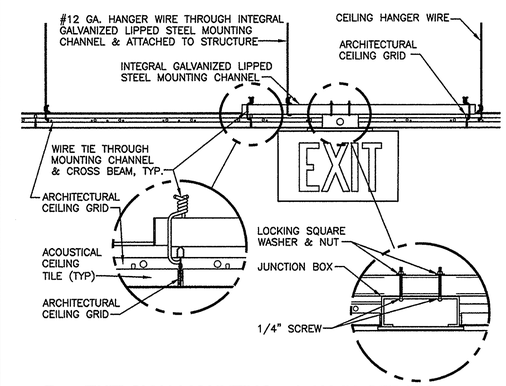

8 EXIT SIGN MOUNTING - LAY-IN CEILING
NTS

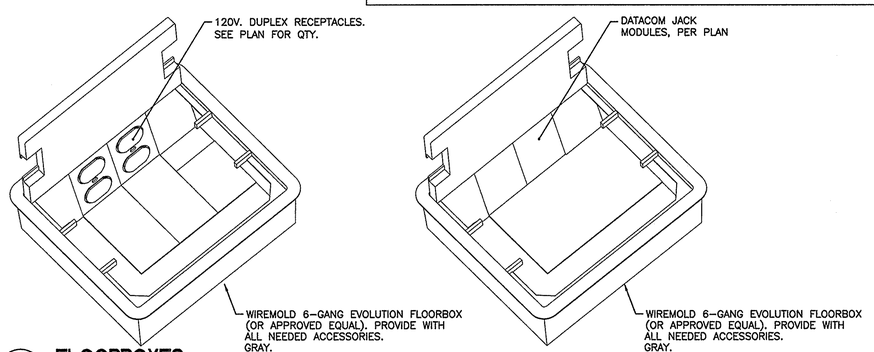

9 FLOORBOXES
NTS

Jul 30, 2014 - 2:48pm

C:\Users\xl55ed\appdata\local\temp\AcPublish_2172\Ex.dwg

REVISIONS	DATE

REGISTERED PROFESSIONAL ENGINEER 74818PE OREGON MARCH 8, 2005 WILLIAM D. LOMICA
RENEWAL DATE: 12-31-20/22

kistler+ small +white architects

RAYMOND KISTLER, ARCHITECT
552 A STREET
ASHLAND, OREGON 97520
P: 541-488-8200
F: 541-552-9512
www.kistlersmallwhite.com

DEPARTMENT OF VETERANS AFFAIRS

SOUTHERN OREGON REHABILITATION CENTER & CLINICS

8495 CRATER LAKE HIGHWAY
WHITE CITY, OREGON

DRAWING TITLE:
ELECTRICAL DETAILS

FULLY SPRINKLERED FACILITY

MAI Project Number: 13-1130
MARQUESS & ASSOCIATES INC
P: 541-772-7115
F: 541-779-4079
1120 East Jackson
PO Box 490
Medford, OR, 97501

PROJECT TITLE
REPLACE DOM BLDG. 203

DRAWN BY:	DATE:	DRAWING NO.:
WDL	4 AUGUST 2014	E0.4
CHECK BY: WDL	VA PROJECT NO.: 692-339	DWG. 4 OF 27

US DEPARTMENT OF VETERANS AFFAIRS

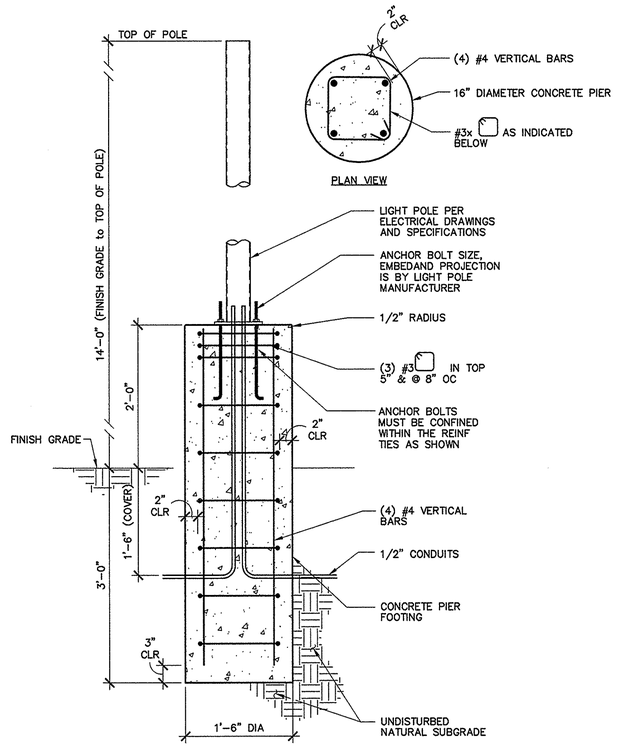

1 POLE BASE DETAIL

NOT TO SCALE

GENERAL REQUIREMENTS

1. Codes and Standards

Design of new elements conforms to the 2010 State of Oregon Edition Structural Specialty Code (OSSC) based on the 2009 Edition International Building Code (IBC). All reference to other codes such as ACI, ASTM, etc. shall be the edition as adopted by the OSSC.

2. Contractor Responsibilities

A. The General Contractor (GC) is responsible for carrying out the requirements of these documents through the use of their own effort or that of subcontractors.
The GC is responsible for all construction methods, techniques, sequencing, and safety required to complete construction. All instructions contained in these documents are interpreted to be instructions to the GC and are the responsibility of the GC to fulfill.
B. Verify existing conditions prior to proceeding with construction. Immediately bring discrepancies to the attention of the Engineer of Record (EOR).
C. Install items manufactured or supplied by others per the manufacturers specifications.

3. General Contractor Warranty Requirements

A. By acceptance of this project the General Contractor (GC) warrants that:
1. The GC and subcontractors hired by the GC have carefully and thoroughly reviewed the drawings and structural notes and have found them complete and free from ambiguities and sufficient for the purpose intended; further that,
2. The GC has carefully examined the work site and that from those investigations is satisfied as to the nature and location of the work, as to the character, quality, quantities of material, and difficulties to be encountered, as to the extent of equipment and other facilities needed for the performance of the work, and as to the general and local conditions, and other items which may affect the work or its performance; further that,
3. The GC and all workers are experienced in the type of construction represented by the drawings and documents; further that,
4. Neither the GC or their employees, agents, intended suppliers, or subcontractors, have relied upon verbal representations allegedly authorized or unauthorized from the owner or their employees or agents, including the Engineer of Record.
B. Bring discrepancies to the attention of the Engineer of Record at least 10 days prior to close of bid.
1. The GC warrants that construction cost for items not brought to the attention of the Engineer of Record (EOR) prior to bid, but that require clarification or EOR assistance during construction, will be covered by the bid amount agreed to by the GC.

4. Design Loads
B. Wind Load
1. Basic Wind Speed = 95 mph (3-sec)
2. Exposure = B
C. Seismic Load
1. Soil Class = C
2. Sds = 0.463g
3. Seismic Design Category = D

DESIGN CRITERIA

CONCRETE F'c = 3,000 psi
REINFORCEMENT: ASTM 615, GR 60
DESIGN SOIL VALUES (REF SOILS REPORT):
- SBP = 3,000 psf
- PASSIVE LATERAL RESISTANCE 300 pcf, 6" BELOW GRADE

MAI Project Number: 13-1130
MARQUESS & ASSOCIATES INC
P: 541-772-7115
F: 541-779-4079
1120 East Jackson
PO Box 490
Medford, OR, 97501

REVISIONS	DATE

REGISTERED PROFESSIONAL ENGINEER 74818PE OREGON MARCH 9, 2001 WILLIAM D. LOMICA
RENEWAL DATE: 12-31-20/7

kistler+small+white architects
RAYMOND KISTLER, ARCHITECT
552 A STREET
ASHLAND, OREGON 97520
P: 541-488-8200
F: 541-552-9512
www.kistlersmallwhite.com

DEPARTMENT OF VETERANS AFFAIRS
SOUTHERN OREGON REHABILITATION CENTER & CLINICS
8495 CRATER LAKE HIGHWAY
WHITE CITY, OREGON

DRAWING TITLE:
ELECTRICAL DETAILS
FULLY SPRINKLERED FACILITY

PROJECT TITLE
REPLACE DOM BLDG. 203

DRAWN BY:	DATE:	DRAWING NO.:
WDL	4 AUGUST 2014	E0.5
CHECK BY: WDL	VA PROJECT NO.: 692-339	DWG. 5 OF 27

US DEPARTMENT OF VETERANS AFFAIRS

Jul 30, 2014 - 2:48pm
G:\Users\45cwil\appdata\local\temp\AcPublish_2172\E0.x.dwg

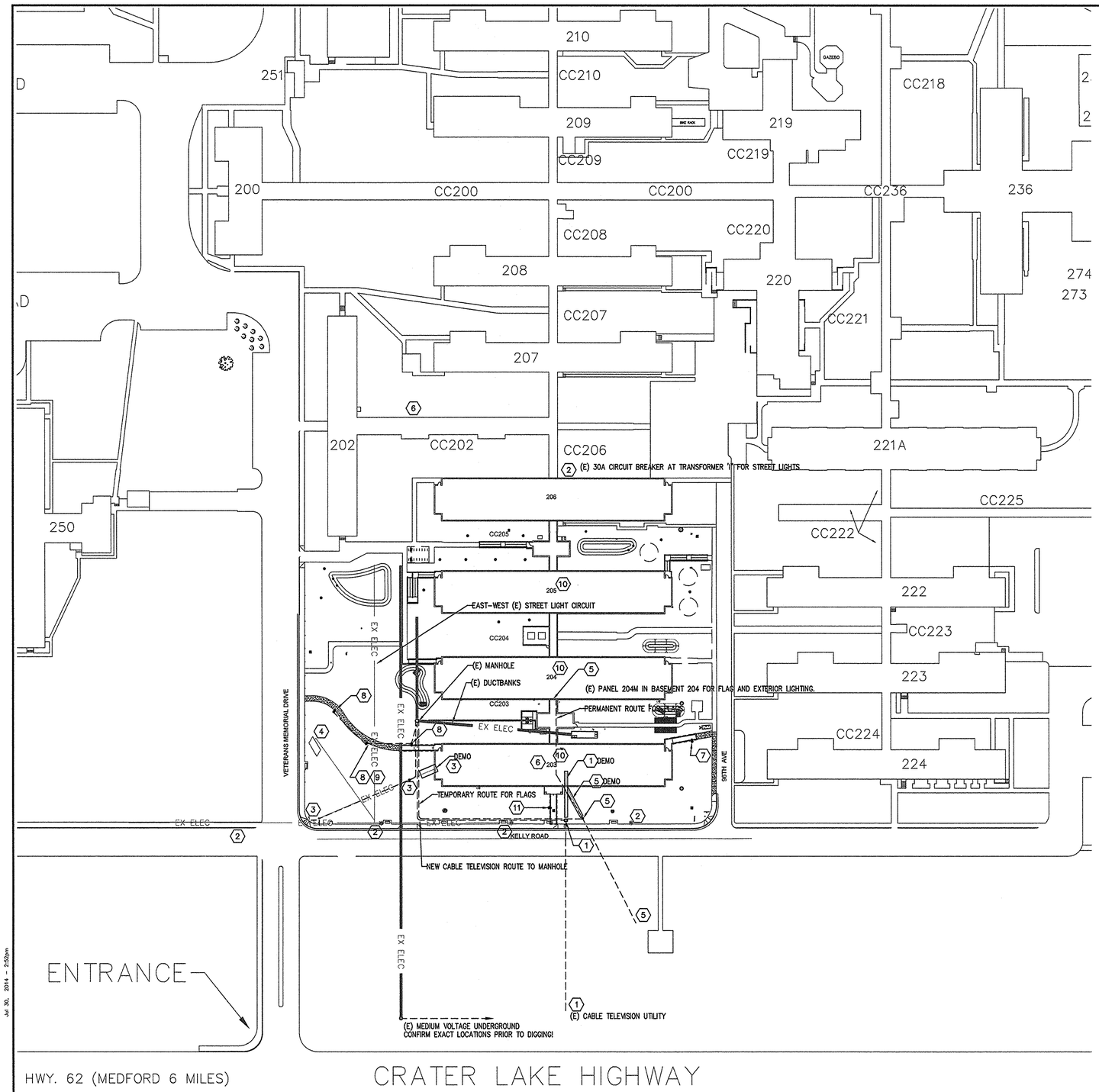

1 ELECTRICAL SITE PLAN

SCALE: 1" = 60'-0"

0 15' 30' 60'

KEYED NOTES

1. PRE-DEMOLITION NOTE. THE INCOMING CABLE TELEVISION SERVICE FOR ENTIRE CAMPUS ROUTES FROM UTILITY AT THE FENCELINE DIRECTLY TO THE BASEMENT OF BUILDING 203. PRIOR TO DEMOLITION OF BUILDING 203, COORDINATE OUTAGE AND RECONNECTION WITH CHARTER CABLE TELEVISION. ROUTE NEW 4" CONDUIT UNDERGROUND FROM MANHOLE TO NEW IN-GOUND BOX WITH TRAFFIC RATED COVER (INDICATED) AT FRONT RAMP. INTERCEPT EXISTING FEED AT BOX. CHARTER TO RECONNECT AND TEST PRIOR TO DEMOLISHING OLD SERVICE.
2. EXISTING STREET LIGHTS TO REMAIN.
3. PRE-DEMOLITION NOTE. CONTRACTOR SHALL RE-ROUTE SECURITY CAMERA FEED ROUTE (OLD ROUTE: FROM PRESENT TERMINATION FEEDING THROUGH THE BASEMENT OF B203 TO CAMERA; NEW ROUTE: FROM PRESENT TERMINATION FEEDING THROUGH THE BASEMENT OF B203/B204 TUNNEL VIA JUNCTION BOX (KEYED NOTE 3) NEW 1-INCH UNDERGROUND CONDUIT TO CAMERA).
4. PRE-DEMOLITION NOTE. SIGNAGE: VA HAS DETERMINED THE SIGNAGE CIRCUIT IS CONNECTED TO THE EXISTING EAST-WEST STREET LIGHTING CIRCUIT ROUTED TO THE SOUTH OF THE NEW BUILDING. CONTRACTOR SHALL KEEP SIGNAGE CIRCUIT IN OPERATION THROUGHOUT THE PROJECT.
5. PRE-DEMOLITION NOTE. CONTRACTOR SHALL PROVIDE FLAG-LIGHT (CIRCUITING AND CONTROL) FROM TWO NEW 30A-1POLE CIRCUIT BREAKERS IN (E) PANEL 204M IN BASEMENT OF B204. ROUTE NEW 1" CONDUIT UNDERGROUND FROM MANHOLE TO NEW IN-GOUND BOX WITH TRAFFIC RATED COVER (INDICATED) AT FRONT RAMP. INTERCEPT EXISTING FEEDS AT BOX. CONDUCTORS: (3) #6 CU THWN PER CIRCUIT (TWO CIRCUITS). RE-ROUTE CIRCUIT TO NEW BUILDING 203 BASEMENT ONCE BASEMENT IS READY FOR ELECTRICAL INSTALLATIONS.
6. PRE-DEMOLITION NOTE. REMOVE (E) 100 PAIR TELEPHONE CABLE, 24-COUNT MULTIMODE FIBER, AND PUBLIC ADDRESS AMPLIFIER HOME RUN CABLE FROM (E) B203. PULL CABLES BACK TO (E) MANHOLE ADJACENT TO WEST SIDE OF CC202, COIL INSIDE MANHOLE, PROTECT EXPOSED END OF CABLES FROM MOISTURE AND TAG "FUTURE BUILDING 207 FEED".
7. NEW POLE-MOUNTED LUMINAIRE (TYPE N) AT NORTH RAMP AND SIDEWALK. SEE EXTERIOR LIGHTING CONTROL DETAIL FOR CIRCUIT AND CONTROL INFORMATION. CIRCUIT 204E-14.
8. NEW POLE-MOUNTED LUMINAIRE (TYPE N) AT SOUTH RAMP AND SIDEWALK. SEE EXTERIOR LIGHTING CONTROL DETAIL FOR CIRCUIT AND CONTROL INFORMATION. CIRCUIT 204E-14.
9. NEW IN-GRADE JUNCTION BOX FOR NORTH SIDEWALK LIGHTING.
10. PRE-DEMOLITION NOTE. REMOVE BUILDING 203 FACP (FIRE ALARM CONTROL PANEL) FROM THE CAMPUS FIRE ALARM SYSTEM NETWORK LOOP (NOTIFIER NET). REMOVE CABLE FROM BUILDING 204 FACP (NODE "B") TO BUILDING 203 FACP (NODE "A"). COMPLETE THE BYPASS BY DISCONNECTING THE NETWORK CABLE FROM BUILDING 203 FACP (NODE "B") AND PULLING THE CABLE BACK TO BUILDING 204 AND CONNECTING TO FACP (NODE "B").
TEST THE NEW NETWORK CONNECTIONS AND VERIFY A SYSTEM NORMAL CONDITION IS ACHEIVED ON THE NETWORK. COORDINATE SCHEDULE OF WORK WITH VA SAFETY PERSONEL AND THE COTR FOR FIRE WATCH PURPOSES.
11. NEW POLE-MOUNTED LUMINAIRE (TYPE N) AT FRONT RAMP. SEE EXTERIOR LIGHTING CONTROL DETAIL FOR CIRCUIT AND CONTROL INFORMATION. CIRCUIT 204E-14.

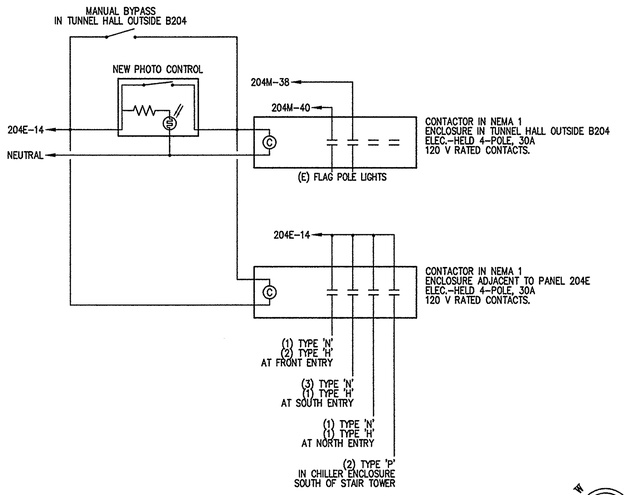

2 EXTERIOR LIGHTING - CONTROL DIAGRAM

SCALE: NOT TO SCALE

TRUE NORTH

PLAN NORTH

MAI Project Number: 13-1130
MARQUESS & ASSOCIATES INC
P: 541-772-7115
F: 541-779-4079
1120 East Jackson
PO Box 490
Medford, OR, 97501

REVISIONS	DATE

REGISTERED PROFESSIONAL ENGINEER 74818PE OREGON MARCH 8, 2005 WILLIAM D. LOMICA
RENEWAL DATE: 12-31-2014

kistler+small+white architects
RAYMOND KISTLER, ARCHITECT
552 A STREET
ASHLAND, OREGON 97520
P: 541-488-6200
F: 541-552-9512
www.kistlersmallwhite.com

DEPARTMENT OF VETERANS AFFAIRS

SOUTHERN OREGON REHABILITATION CENTER & CLINICS

8495 CRATER LAKE HIGHWAY
WHITE CITY, OREGON

DRAWING TITLE:

ELECTRICAL SITE PLAN

FULLY SPRINKLERED FACILITY

PROJECT TITLE		
REPLACE DOM BLDG. 203		
DRAWN BY: WDL	DATE: 4 AUGUST 2014	DRAWING NO.: E1.1
CHECK BY: WDL	VA PROJECT NO.: 692-339	DWG. 6 OF 27

US DEPARTMENT OF VETERANS AFFAIRS

Jul 30, 2014 - 2:52pm

S:\13-1130_dwg\E1.1.dwg

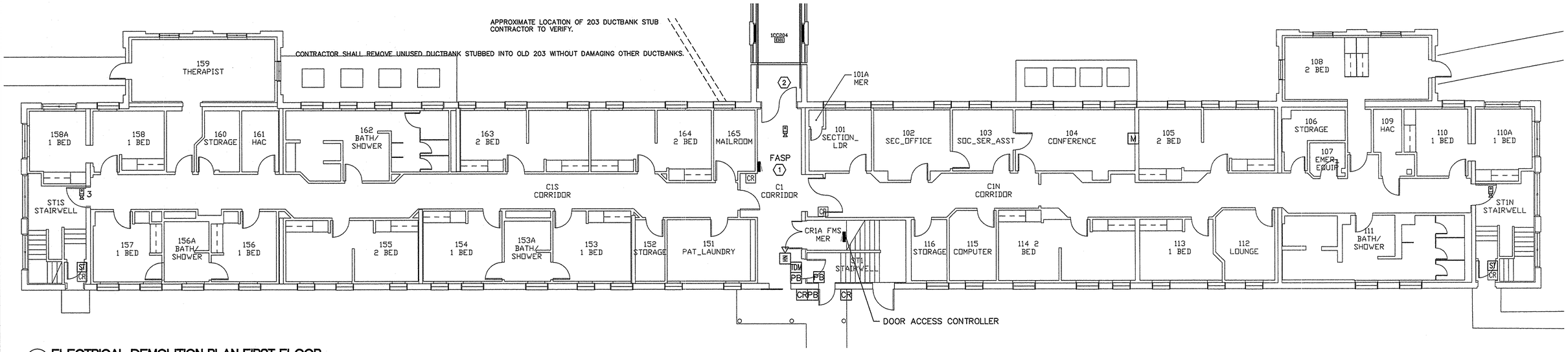

1 ELECTRICAL DEMOLITION PLAN FIRST FLOOR

SCALE: 1/8" = 1'-0" 0 4' 8' 16'

REMOVE THESE DEVICES AND TURN OVER TO V.A.

- CR — ELECTRONIC CARD SWIPE READER, MAGNETIC LOCKS AND Z-BRACKETS.
- M — VIDEO MONITOR
- FIXED HIGH-DEFINITION VIDEO CAMERA.
- PB — ENTRY/EXIT PB 18-2C
- TDM — TIME DELAY 18-2C
- ST — DOOR STATUS 22-2C
- HN — ALARM HORN 18-2C
- ACCESS CONTROLLER

KEYED NOTES

1. CONTRACTOR SHALL DEMO FIRE ALARM CONTROL PANEL AFTER IT HAS BEEN REMOVED FROM THE CAMPUS NOTIFIER NETWORK LOOP (SEE OTHER PLANS). CONTRACTOR SHALL DEMO FIRE ALARM DEVICES, PANELS, AND CIRCUITS. INVENTORY REMOVED DEVICES AND PANELS TO VA.
2. PRIOR TO DEMO, CONTRACTOR SHALL PULL BACK EXISTING BUILDING 204 FIRE ALARM CIRCUITS INCLUDING DOOR HOLDER POWER AND CONTROL AND PREP FOR RECONNECTION TO NEW BUILDING 203. CONTRACTOR SHALL MODIFY PROGRAMMING OF FASP IN BUILDING 204 TO RESTORE PANEL TO SYSTEM NORMAL STATUS. PERFORM PARTIAL TEST OF BUILDING 204 FIRE ALARM SYSTEM AS REQUIRED BY NFPA-72 AT COMPLETION OF FIRE ALARM SYSTEM DEMO.

W S N E PLAN NORTH

MAI Project Number: 13-1130
MARQUESS & ASSOCIATES INC
P: 541-772-7115
F: 541-779-4079
1120 East Jackson
PO Box 490
Medford, OR, 97501

REVISIONS	DATE

REGISTERED PROFESSIONAL ENGINEER 74618PE OREGON MARCH 8, 2005 WILLIAM D. LOMICA
RENEWAL DATE: 12-31-2014

kistler + small + white architects
RAYMOND KISTLER, ARCHITECT
552 A STREET
ASHLAND, OREGON 97520
P: 541-488-8200
F: 541-552-9512
www.kistlersmallwhite.com

DEPARTMENT OF VETERANS AFFAIRS

SOUTHERN OREGON REHABILITATION CENTER & CLINICS

8495 CRATER LAKE HIGHWAY
WHITE CITY, OREGON

DRAWING TITLE:

ELECTRICAL DEMOLITION PLAN
FIRST FLOOR

FULLY SPRINKLERED FACILITY

PROJECT TITLE
REPLACE DOM BLDG. 203

DRAWN BY:	DATE:	DRAWING NO.:
WDL	4 AUGUST 2014	E2.1
CHECK BY:	VA PROJECT NO.:	
WDL	692-339	DWG. 7 OF 27

US DEPARTMENT OF VETERANS AFFAIRS

Jul 30, 2014 - 2:54pm

S:\13-1130_dwg\E2.dwg

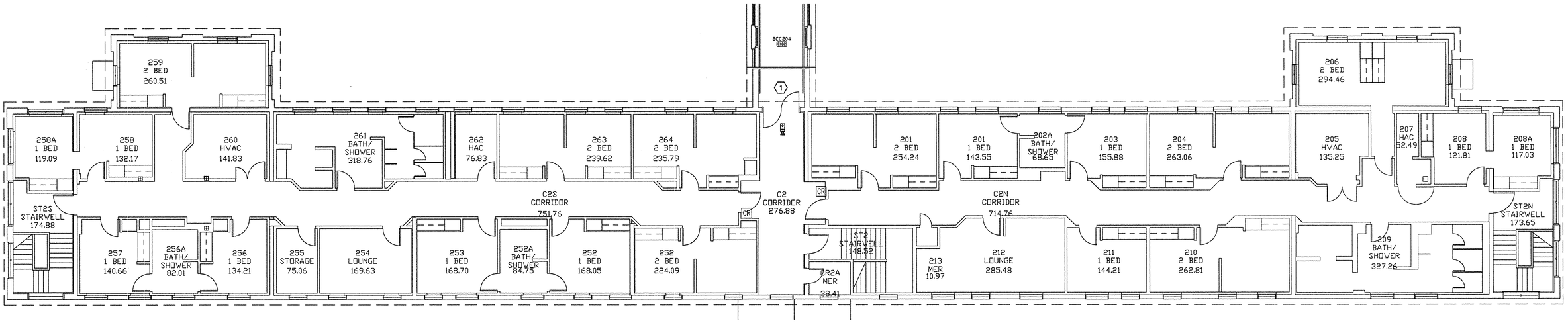

1 ELECTRICAL DEMOLITION PLAN SECOND FLOOR

SCALE: 1/8" = 1'-0"

0 4' 8' 16'

REMOVE THESE DEVICES AND TURN OVER TO V.A.

- CR — ELECTRONIC CARD SWIPE READER, MAGNETIC LOCKS AND Z-BRACKETS.
- M — VIDEO MONITOR
- FIXED HIGH-DEFINITION VIDEO CAMERA.
- PB — ENTRY/EXIT PB 18-2C
- TDM — TIME DELAY 18-2C
- ST — DOOR STATUS 22-2C
- HN — ALARM HORN 18-2C
- ACCESS CONTROLLER

KEYED NOTES

1. PRIOR TO DEMO, CONTRACTOR SHALL PULL BACK EXISTING BUILDING 204 FIRE ALARM CIRCUITS INCLUDING DOOR HOLDER POWER AND CONTROL AND PREP FOR RECONNECTION TO NEW BUILDING 203. CONTRACTOR SHALL MODIFY PROGRAMMING OF FASP IN BUILDING 204 TO RESTORE PANEL TO SYSTEM NORMAL STATUS. PERFORM PARTIAL TEST OF BUILDING 204 FIRE ALARM SYSTEM AS REQUIRED BY NFPA-72 AT COMPLETION OF FIRE ALARM SYSTEM DEMO.

W S N E PLAN NORTH

MARQUESS & ASSOCIATES INC
MAI Project Number: 13-1130
P: 541-772-7115
F: 541-779-4079
1120 East Jackson
PO Box 490
Medford, OR, 97501

REVISIONS	DATE

REGISTERED PROFESSIONAL ENGINEER 74818PE OREGON MARCH 5, 2003 WILLIAM D. LOMICA
RENEWAL DATE: 12-31-20

kistler+ small +white architects
RAYMOND KISTLER, ARCHITECT
552 A STREET
ASHLAND, OREGON 97520
P: 541-488-8200
F: 541-552-6512
www.kistlersmallwhite.com

DEPARTMENT OF VETERANS AFFAIRS

SOUTHERN OREGON REHABILITATION CENTER & CLINICS

8495 CRATER LAKE HIGHWAY
WHITE CITY, OREGON

DRAWING TITLE:

ELECTRICAL DEMOLITION PLAN
SECOND FLOOR

FULLY SPRINKLERED FACILITY

PROJECT TITLE
REPLACE DOM BLDG. 203

DRAWN BY:	DATE:	DRAWING NO.:
WDL	4 AUGUST 2014	E2.2
CHECK BY: WDL	VA PROJECT NO.: 692-339	DWG. 8 OF 27

US DEPARTMENT OF VETERANS AFFAIRS

Jul 30, 2014 - 2:54pm

S:\13-1130_dwgs\E2x.dwg

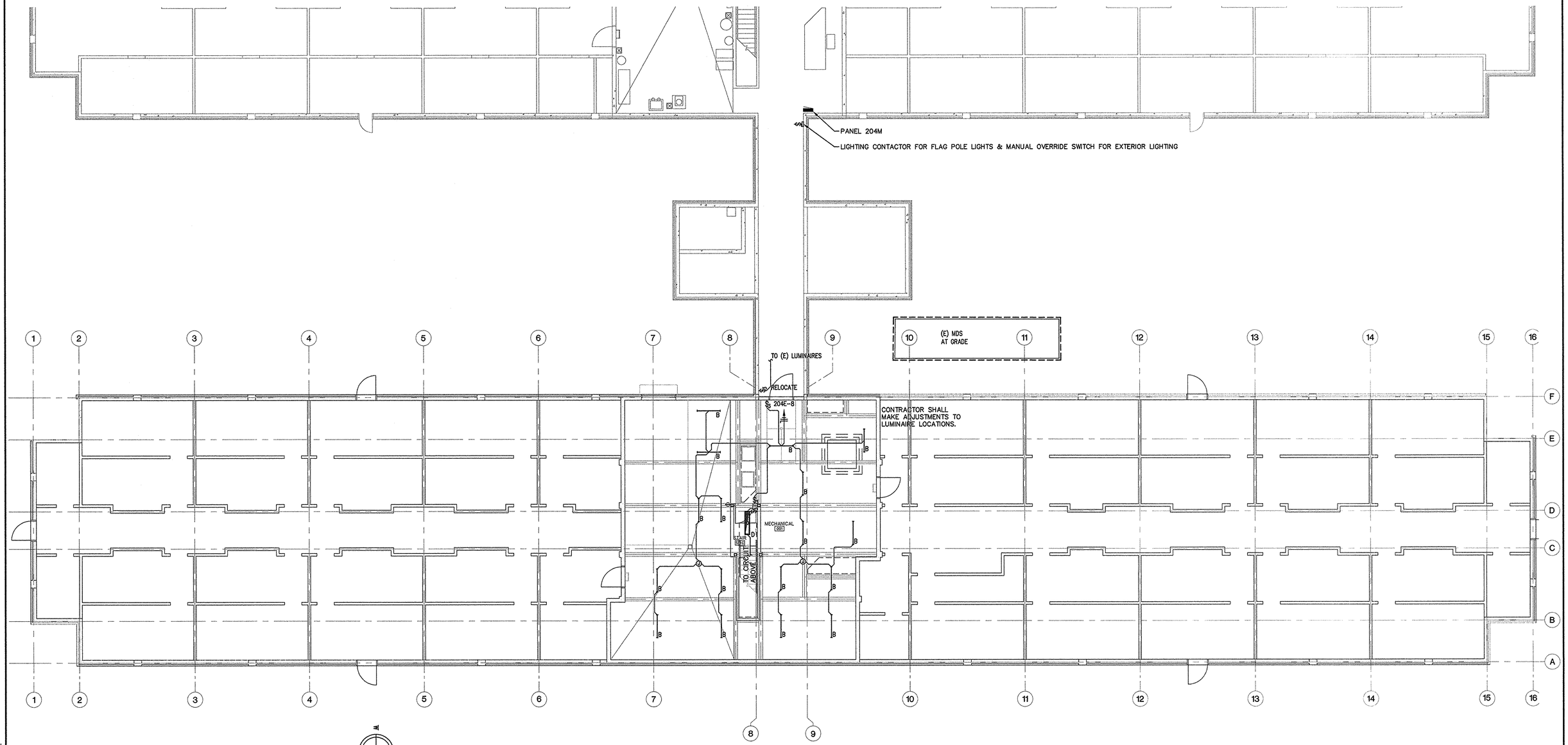

1 ELECTRICAL LIGHTING PLAN BASEMENT

SCALE: 1/8" = 1'-0"

0 4' 8' 16'

PLAN NORTH

KEYED NOTES

1. PROVIDE PHOTOCELL ON ROOF. COORDINATE SETTINGS WITH VA PROJECT MANAGER.

REVISIONS	DATE

REGISTERED PROFESSIONAL ENGINEER 74816PE OREGON MARCH 9, 2005 WILLIAM D. LOMICA
RENEWAL DATE: 12-31-20

kistler+ small +white architects

RAYMOND KISTLER, ARCHITECT
552 A STREET
ASHLAND, OREGON 97520
P: 541-488-8200
F: 541-552-9512
www.kistlersmallwhite.com

DEPARTMENT OF VETERANS AFFAIRS

SOUTHERN OREGON REHABILITATION CENTER & CLINICS

8495 CRATER LAKE HIGHWAY
WHITE CITY, OREGON

DRAWING TITLE:

ELECTRICAL LIGHTING PLAN BASEMENT

FULLY SPRINKLERED FACILITY

MARQUESS & ASSOCIATES INC
MAI Project Number: 13-1130
P: 541-772-7115
F: 541-779-4079
1120 East Jackson
PO Box 490
Medford, OR, 97501

PROJECT TITLE		
REPLACE DOM BLDG. 203		
DRAWN BY: WDL	DATE: 4 AUGUST 2014	DRAWING NO.: E3.1
CHECK BY: WDL	VA PROJECT NO.: 692-339	DWG. 9 OF 27

US DEPARTMENT OF VETERANS AFFAIRS

Jul 30, 2014 - 2:26pm

S:\13-1130_dwg\E3.x.dwg

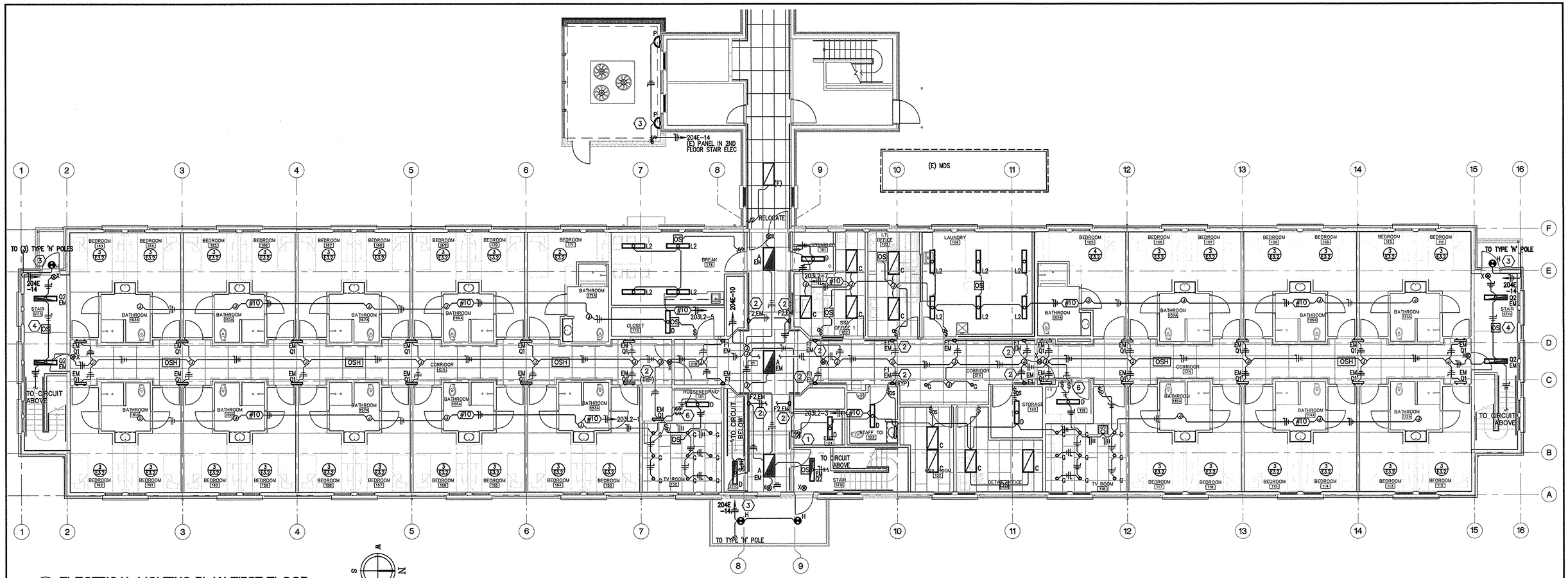

1 ELECTRICAL LIGHTING PLAN FIRST FLOOR

SCALE: 1/8" = 1'-0"

0 4' 8' 16'

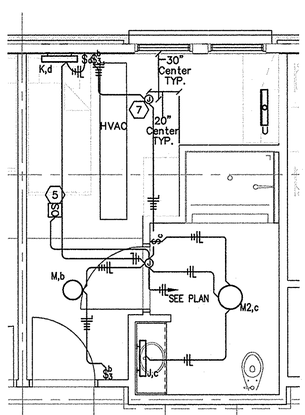

2 ENLARGED ROOM LIGHTING PLAN

SCALE: 1/4" = 1'-0"

0 2' 4' 8'

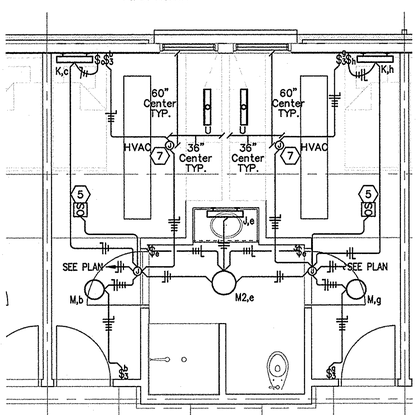

3 ENLARGED ROOM LIGHTING PLAN

SCALE: 1/4" = 1'-0"

0 2' 4' 8'

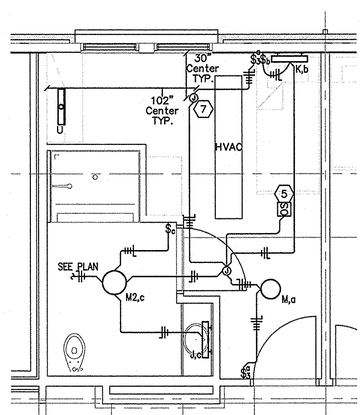

4 ENLARGED ROOM LIGHTING PLAN

SCALE: 1/4" = 1'-0"

0 2' 4' 8'

KEYED NOTES

1. PROVIDE KEYED SWITCH FOR MAINTENANCE DISCONNECT OF EMERGENCY FIXTURES. PROVIDE ENGRAVED FACE PLATE WITH WORDING: MAINTENANCE SWITCH FOR EMERGENCY FIXTURES.
2. COORDINATE MOUNTING OF WALL SCONCES WITH ARCHITECT. REFER TO CONTRACT DOCUMENTS FOR DETAILS AND DIMENSIONS. TO BE SWITCHED BY NOTE 1 KEYED SWITCH.
3. SEE EXTERIOR LIGHITNG CONTROL DETAIL. PROVIDE PHOTOCELL ON ROOF OF CROSS CORRIDOR. COORDINATE LOCATIONS/SETTINGS WITH VA PROJECT MANAGER.
4. CONNECT SENSOR TO POWER PACK LOCATED NEAR UPPER STAIR OCCUPANCY SENSOR ON SAME CIRCUIT. PROVIDE WIRING PER MANUFACTURER'S RECOMMENDATIONS. REMOTE LOCATE POWER PACK ABOVE T-BAR CEILING. IN NON-OCCUPIED STATE, THE Q2 LUMINAIRE SHALL REDUCE LIGHT OUTPUT TO 10% OUTPUT.
5. ULTRASONIC OCCUPANT SENSOR CONTROLS ALL LIGHTS IN BEDROOM. LOCATE FOR COMPLETE COVERAGE OF ROOM FROM DOOR TO EXTERIOR WALL.
6. Q1 LUMINAIRES IN RESIDENTIAL CORRIDORS. LOCATE DIMMER CONTROL IN JANITOR CLOSET. PROVIDE ENGRAVED FACE PLATE WITH WORDING: DIMMING CONTROL FOR HALLWAY LIGHTS. SEQUENCE OF OPERATION: MULTIPLE CEILING-MOUNTED OCCUPANCY SENSORS TIED TOGETHER TO FORM A LARGE ZONE WITHIN EACH RESIDENTIAL CORRIDOR SHALL OUTPUT OCCUPIED/NONOCCUPIED STATUS TO DIMMER CONTROL IN THE CORRESPONDING JANITOR ROOM. IN NON-OCCUPIED STATE, THE Q1 LUMINAIRE SHALL REDUCE LIGHT OUTPUT TO 10% OUTPUT. IN OCCUPIED STATE, THE Q1 OUTPUT SHALL INCREASE TO THE VA-LEVEL PROGRAMMED AT THE DIMMER. PROGRAMMING SHALL NOT BE LOST DUE TO POWER OUTAGES.
7. COVERED, RECESSED JUNCTION BOX IN BEDROOM CEILING FOR POTENTIAL FUTURE LUMINIARE. LOCATE BOX AS SHOWN. PROVIDE SCREW-LESS COVER.

MAI Project Number: 13-1130
MARQUESS & ASSOCIATES INC
P: 541-772-7115
F: 541-779-4079
1120 East Jackson
PO Box 490
Medford, OR, 97501

REVISIONS	DATE

REGISTERED PROFESSIONAL ENGINEER 74818PE OREGON JULY 24, 2009 WILLIAM D. LOMICA
RENEWAL DATE: 12-31-20

kistler+small+white architects
RAYMOND KISTLER, ARCHITECT
552 A STREET
ASHLAND, OREGON 97520
P: 541-488-8200
F: 541-552-9512
www.kistlersmallwhite.com

DEPARTMENT OF VETERANS AFFAIRS

SOUTHERN OREGON REHABILITATION CENTER & CLINICS

8495 CRATER LAKE HIGHWAY
WHITE CITY, OREGON

DRAWING TITLE:

ELECTRICAL LIGHTING PLAN FIRST FLOOR

FULLY SPRINKLERED FACILITY

PROJECT TITLE
REPLACE DOM BLDG. 203

DRAWN BY:	DATE:	DRAWING NO.:
WDL	4 AUGUST 2014	E3.2
CHECK BY:	VA PROJECT NO.:	
WDL	692-339	DWG.10 OF 27

US DEPARTMENT OF VETERANS AFFAIRS

Jul 30, 2014 - 2:58pm

S:\13-1130_dwg\E3.dwg

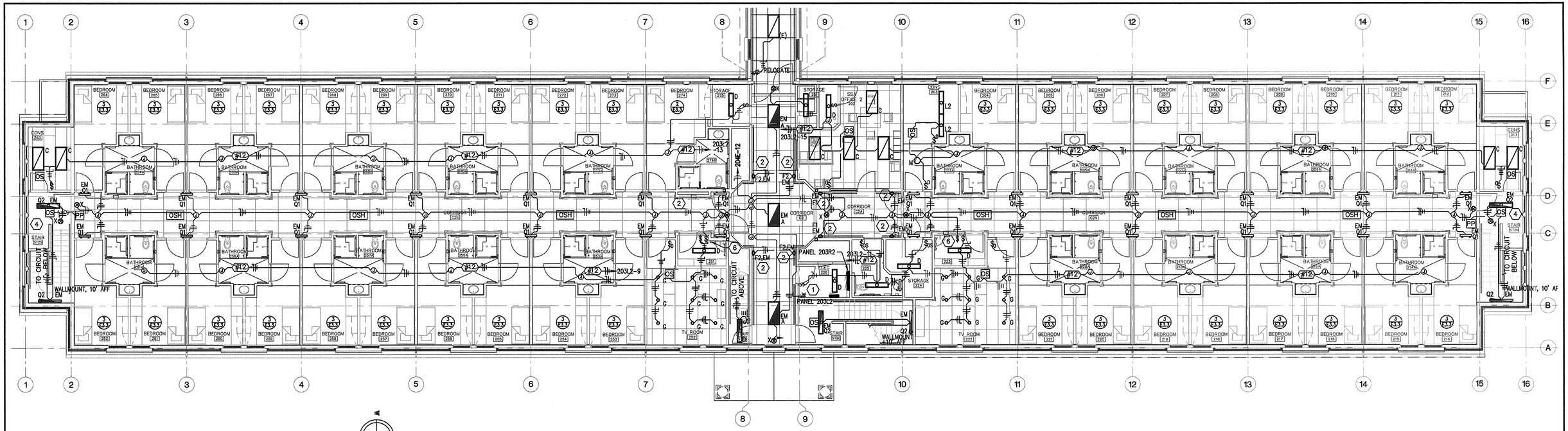

1 ELECTRICAL LIGHTING PLAN SECOND FLOOR

SCALE: 1/8" = 1'-0"

0 4' 8' 16'

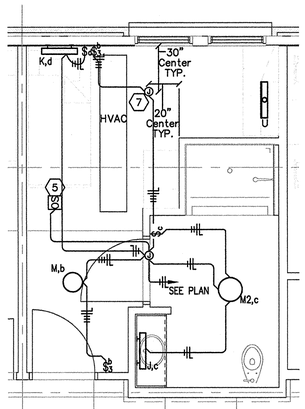

2 ENLARGED ROOM LIGHTING PLAN

SCALE: 1/4" = 1'-0"

0 2' 4' 8'

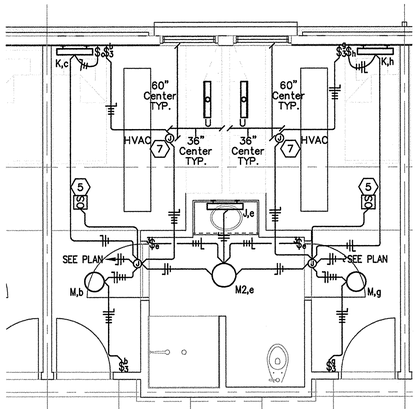

3 ENLARGED ROOM LIGHTING PLAN

SCALE: 1/4" = 1'-0"

0 2' 4' 8'

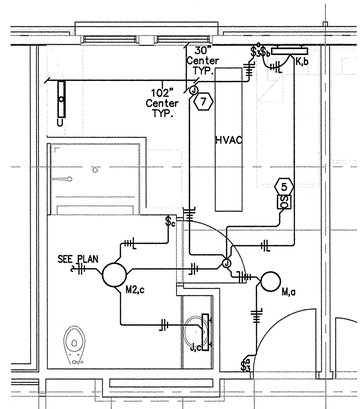

4 ENLARGED ROOM LIGHTING PLAN

SCALE: 1/4" = 1'-0"

0 2' 4' 8'

KEYED NOTES

1. PROVIDE KEYED SWITCH FOR MAINTENANCE DISCONNECT OF EMERGENCY FIXTURES. PROVIDE ENGRAVED FACE PLATE WITH WORDING: MAINTENANCE SWITCH FOR EMERGENCY FIXTURES.
2. COORDINATE MOUNTING OF WALL SCONCES WITH ARCHITECT. REFER TO CONTRACT DOCUMENTS FOR DETAILS AND DIMENSIONS. TO BE SWITCHED BY NOTE 1 KEYED SWITCH.
4. CONNECT SENSOR TO POWER PACK LOCATED NEAR UPPER STAIR OCCUPANCY SENSOR ON SAME CIRCUIT. PROVIDE WIRING PER MANUFACTURER'S RECOMMENDATIONS. REMOTE LOCATE POWER PACK ABOVE T-BAR CEILING. IN NON-OCCUPIED STATE, THE Q2 LUMINAIRE SHALL REDUCE LIGHT OUTPUT TO 10% OUTPUT.
5. ULTRASONIC OCCUPANT SENSOR CONTROLS ALL LIGHTS IN BEDROOM. LOCATE FOR COMPLETE COVERAGE OF ROOM FROM DOOR TO EXTERIOR WALL.
6. Q1 LUMINAIRES IN RESIDENTIAL CORRIDORS. LOCATE DIMMER CONTROL IN JANITOR CLOSET. PROVIDE ENGRAVED FACE PLATE WITH WORDING: DIMMING CONTROL FOR HALLWAY LIGHTS. SEQUENCE OF OPERATION: MULTIPLE CEILING-MOUNTED OCCUPANCY SENSORS TIED TOGETHER TO FORM A LARGE ZONE WITHIN EACH RESIDENTIAL CORRIDOR SHALL OUTPUT OCCUPIED/NONOCCUPIED STATUS TO DIMMER CONTROL IN THE CORRESPONDING JANITOR ROOM. IN NON-OCCUPIED STATE, THE Q1 LUMINAIRE SHALL REDUCE LIGHT OUTPUT TO 10% OUTPUT. IN OCCUPIED STATE, THE Q1 OUTPUT SHALL INCREASE TO THE VA-LEVEL PROGRAMMED AT THE DIMMER. PROGRAMMING SHALL NOT BE LOST DUE TO POWER OUTAGES.
7. COVERED, RECESSED JUNCTION BOX IN BEDROOM CEILING FOR POTENTIAL FUTURE LUMINIARE. LOCATE BOX AS SHOWN. PROVIDE SCREW-LESS COVER.

MAI Project Number: 13-1130
MARQUESS & ASSOCIATES INC
P: 541-772-7115
F: 541-779-4079
1120 East Jackson
PO Box 490
Medford, OR, 97501

REVISIONS	DATE

REGISTERED PROFESSIONAL ENGINEER 74818PE OREGON MARCH 8, 2005 WILLIAM D. LOMICA
RENEWS: DECEMBER 31, 2014

kistler+small+white architects

RAYMOND KISTLER, ARCHITECT
552 A STREET
ASHLAND, OREGON 97520
P: 541-488-8200
F: 541-552-9512
www.kistlersmallwhite.com

DEPARTMENT OF VETERANS AFFAIRS

SOUTHERN OREGON REHABILITATION CENTER & CLINICS

8495 CRATER LAKE HIGHWAY
WHITE CITY, OREGON

DRAWING TITLE:

ELECTRICAL LIGHTING PLAN
SECOND FLOOR

FULLY SPRINKLERED FACILITY

PROJECT TITLE		
REPLACE DOM BLDG. 203		
DRAWN BY: WDL	DATE: 4 AUGUST 2014	DRAWING NO.: E3.3
CHECK BY: WDL	VA PROJECT NO.: 692-339	DWG.11 OF 27

US DEPARTMENT OF VETERANS AFFAIRS

Aug 26, 2014 - 9:59am

S:\13-1130_esct\E3.x.dwg

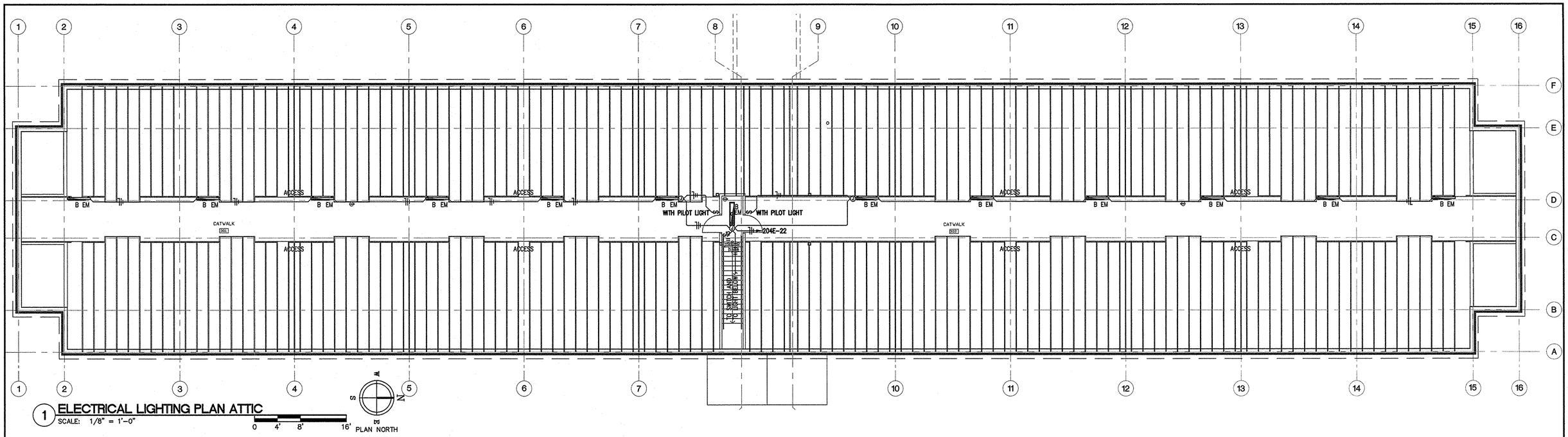

1 ELECTRICAL LIGHTING PLAN ATTIC

SCALE: 1/8" = 1'-0"

0 4' 8' 16'

REVISIONS	DATE

REGISTERED PROFESSIONAL ENGINEER 74816PE OREGON MARCH 5, 2002 WILLIAM D. LOMICA

RENEWAL DATE: 12-31-2014

kistler+ small +white architects

RAYMOND KISTLER, ARCHITECT
552 A STREET
ASHLAND, OREGON 97520
P: 541-488-8200
F: 541-552-9512
www.kistlersmallwhite.com

DEPARTMENT OF VETERANS AFFAIRS

SOUTHERN OREGON REHABILITATION CENTER & CLINICS

8495 CRATER LAKE HIGHWAY
WHITE CITY, OREGON

DRAWING TITLE:

ELECTRICAL LIGHTING PLAN
ATTIC

FULLY SPRINKLERED FACILITY

MARQUESS & ASSOCIATES INC
MAI Project Number: 13-1130
P: 541-772-7115
F: 541-779-4079
1120 East Jackson
PO Box 490
Medford, OR, 97501

PROJECT TITLE
REPLACE DOM BLDG. 203

DRAWN BY:	DATE:	DRAWING NO.:
WDL	4 AUGUST 2014	E3.4
CHECK BY: WDL	VA PROJECT NO.: 692-339	DWG.12 OF 27

US DEPARTMENT OF VETERANS AFFAIRS

S:\13-1130_elect\E3.4.dwg

Jul 30, 2014 - 2:59pm

KEYED NOTES

1. CONTRACTOR SHALL PROVIDE 120V POWER CONNECTIONS TO ALL HVAC CONTROL DEVICES. COORDINATE WITH OTHER TRADES. CONNECT TO CIRCUIT BREAKERS INDICATED IN PANEL 203M SCHEDULE.

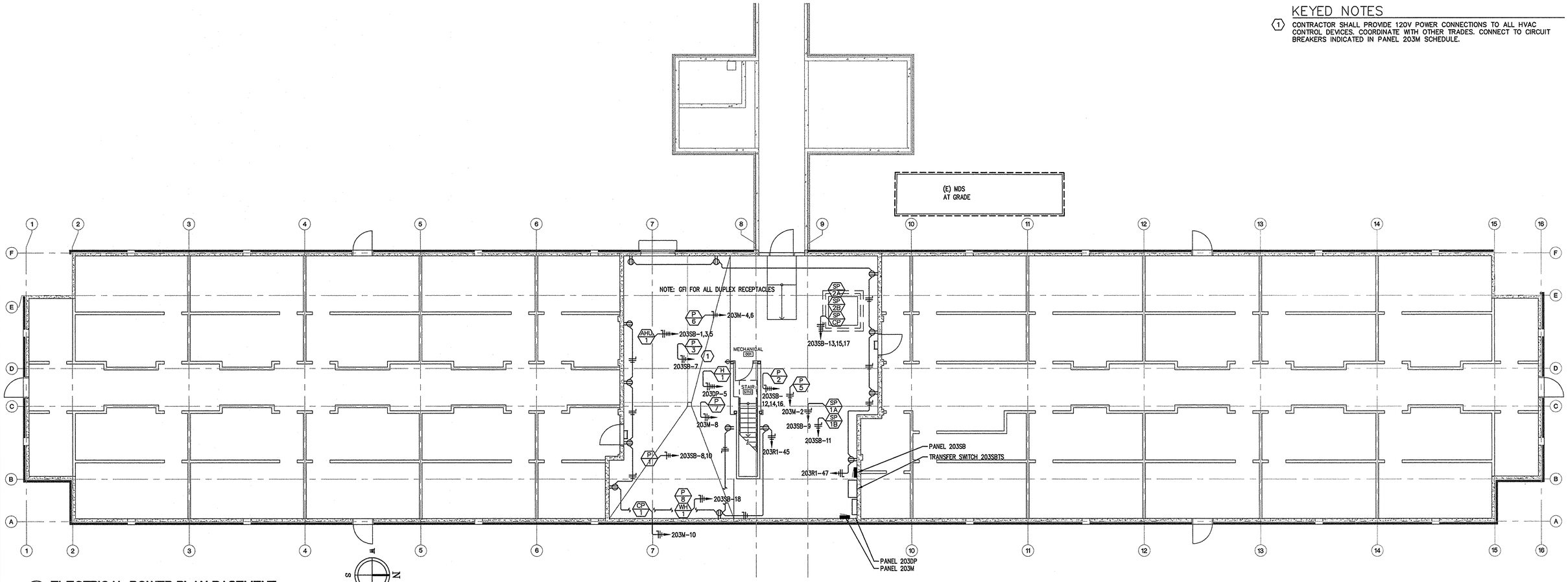

1 ELECTRICAL POWER PLAN BASEMENT
SCALE: 1/8" = 1'-0"
0 4' 8' 16'

Jul 30, 2014 - 3:05pm

S:\13-1130_elect\E4.x.dwg

MAI Project Number: 13-1130

MARQUESS & ASSOCIATES INC
P: 541-772-7115
F: 541-779-4079
1120 East Jackson
PO Box 490
Medford, OR, 97501

REVISIONS	DATE

REGISTERED PROFESSIONAL ENGINEER 74816PE OREGON MARCH 5, 2008 WILLIAM D. LOMICA
RENEWAL DATE: 12-31-2014

kistler+ small +white architects
RAYMOND KISTLER, ARCHITECT
532 A STREET
ASHLAND, OREGON 97520
P: 541-488-8200
F: 541-552-9512
www.kistlersmallwhite.com

DEPARTMENT OF VETERANS AFFAIRS

SOUTHERN OREGON REHABILITATION CENTER & CLINICS

8495 CRATER LAKE HIGHWAY
WHITE CITY, OREGON

DRAWING TITLE:

ELECTRICAL POWER PLAN
BASEMENT

FULLY SPRINKLERED FACILITY

PROJECT TITLE		
REPLACE DOM BLDG. 203		
DRAWN BY: WDL	DATE: 4 AUGUST 2014	DRAWING NO.: E4.1
CHECK BY: WDL	VA PROJECT NO.: 692-339	DWG.13 OF 27

US DEPARTMENT OF VETERANS AFFAIRS

FIRE/SMOKE DAMPER NOTE

FSD NOTE: ALL FIRST FLOOR FIRE/SMOKE DAMPERS CONNECT TO A COMMON CIRCUIT BREAKER. CONNECT TO CIRCUIT BREAKER 204E-25

BACK-TO-BACK BOX NOTE

BACK-TO-BACK RECEPTACLE AND DATA BOXES IN COMMON RATED WALLS SHALL BE SEPARATED A MINIMUM OF 24".

GFCI PROTECTION NOTE

ALL OF THE FOLLOWING 125V, SINGLE PHASE 15- AND 20-AMP RECEPTACLES SHALL HAVE GFCI PROTECTION FOR PRESONNEL: BATHROOMS, KITCHENS, ROOFTOPS, OUTDOORS, WITHIN 6-FEET OF OUTSIDE EDGE OF SINK.

KEYED NOTES

1. COORDINATE EXACT POWER AND DATA BOX LOCATIONS WITH ARCHITECT AND CASEWORK PROVIDER. MOUNT OUTSIDE OF TACKBOARD.
2. RECEPTACLE FOR WIRELESS ACCESS POINT MOUNTED IN SPACE ABOVE CEILING. COORDINATE LOCATIONS WITH VA AND OTHER TRADES PRIOR TO INSTALL.

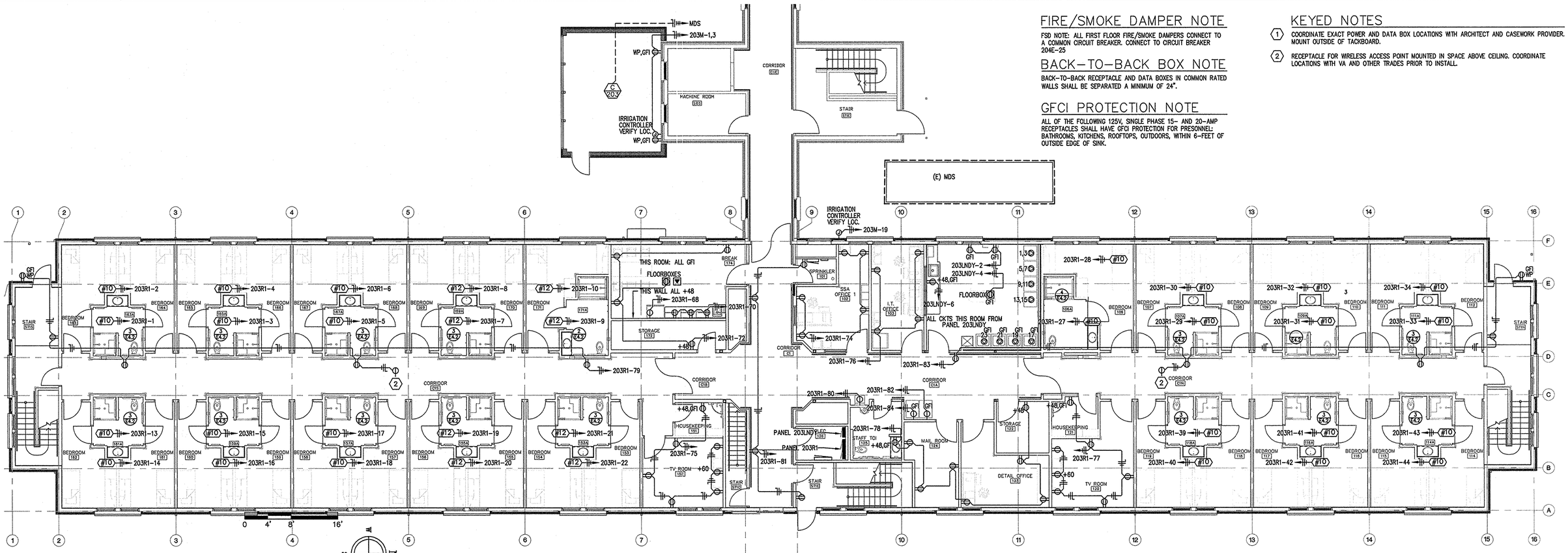

1 ELECTRICAL POWER PLAN FIRST FLOOR

SCALE: 1/8" = 1'-0"

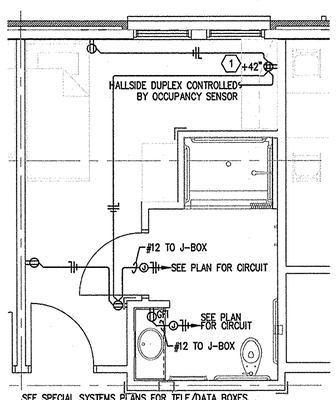

2 ENLARGED ROOM POWER PLAN

SCALE: 1/4" = 1'-0"

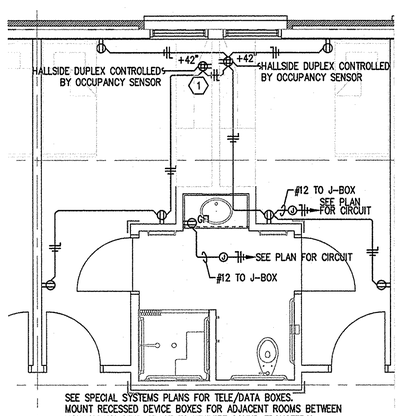

3 ENLARGED ROOM POWER PLAN

SCALE: 1/4" = 1'-0"

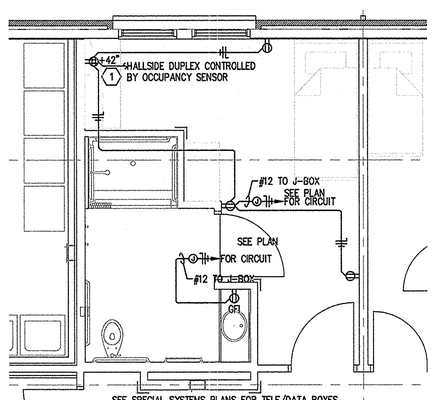

4 ENLARGED ROOM POWER PLAN

SCALE: 1/4" = 1'-0"

REVISIONS	DATE

REGISTERED PROFESSIONAL ENGINEER 74816PE OREGON MARCH 9, 2005 WILLIAM D. LOMICA
RENEWAL DATE: 12-31-2014

kistler+ small +white architects

RAYMOND KISTLER, ARCHITECT
552 A STREET
ASHLAND, OREGON 97520
P: 541-488-8200
F: 541-552-9512
www.kistlersmallwhite.com

DEPARTMENT OF VETERANS AFFAIRS

SOUTHERN OREGON REHABILITATION CENTER & CLINICS

8495 CRATER LAKE HIGHWAY
WHITE CITY, OREGON

DRAWING TITLE:

ELECTRICAL POWER PLAN FIRST FLOOR

FULLY SPRINKLERED FACILITY

MAI Project Number: 13-1130
MARQUESS & ASSOCIATES INC
P: 541-772-7115
F: 541-779-4079
1120 East Jackson
PO Box 490
Medford, OR, 97501

PROJECT TITLE		
REPLACE DOM BLDG. 203		
DRAWN BY: WDL	DATE: 4 AUGUST 2014	DRAWING NO.: E4.2
CHECK BY: WDL	VA PROJECT NO.: 692-339	DWG.14 OF 27

US DEPARTMENT OF VETERANS AFFAIRS

Jul 30, 2014 - 3:07pm

S:\13-1130_plech\E4x.dwg

FIRE/SMOKE DAMPER NOTE

FSD NOTE: ALL FIRST FLOOR FIRE/SMOKE DAMPERS CONNECT TO A COMMON CIRCUIT BREAKER. CONNECT TO CIRCUIT BREAKER 204E-25

BACK-TO-BACK BOX NOTE

BACK-TO-BACK RECEPTACLE AND DATA BOXES IN COMMON RATED WALLS SHALL BE SEPARATED A MINIMUM OF 24".

GFCI PROTECTION NOTE

ALL OF THE FOLLOWING 125V, SINGLE PHASE 15- AND 20-AMP RECEPTACLES SHALL HAVE GFCI PROTECTION FOR PRESONNEL: BATHROOMS, KITCHENS, ROOFTOPS, OUTDOORS, WITHIN 6-FEET OF OUTSIDE EDGE OF SINK.

KEYED NOTES

1. COORDINATE EXACT POWER AND DATA BOX LOCATIONS WITH ARCHITECT AND CASEWORK PROVIDER. MOUNT OUTSIDE OF TACKBOARD.
2. RECEPTACLE FOR WIRELESS ACCESS POINT MOUNTED IN SPACE ABOVE CEILING. COORDINATE LOCATIONS WITH VA AND OTHER TRADES PRIOR TO INSTALL.
3. RELOCATE EXISTING RECEPTACLES IN ITOS ROOM TO INSIDE EACH CORRESPONDING EXISTING CABLE MANAGEMENT CAVITY. PROVIDE A FLOOR MOUNTED DOUBLE-DUPLEX RECEPTACLE BOX WITHIN EACH EXISTING WIRE-MANAGEMENT CAVITY. ORIENT THE BOX SO THE FACE OF THE RECEPTACLES FACES THE EAST WALL (GROUND PINS UP) WITH SIX-INCHES OF HAND AND CORD CLEARANCE FROM THE FRONT ACCESS DOOR. SECURE BOX TO FLOOR WITH ANGLED METAL BRACING. RELOCATE FACEPLATES AND RECEPTACLES TO NEW LOCATIONS. MAKE UP EXTENSIONS OF EXISTING CIRCUITS WITHIN THE RECESSED BOX BY PROVIDING A NEW BOX COVER WITH 1/2" KNOCKOUT, A 90-DEGREE LIQUID-TIGHT 1/2" CONNECTOR; A 1/2" LIQUID-TIGHT FLEXIBLE CONDUIT FED THROUGH A NEW PENETRATION IN THE WIRE MANAGEMENT'S METALLIC FOOTPLATE, AND A DIRECT CONNECTION INTO THE BACK-SIDE OF THE NEW BOX.

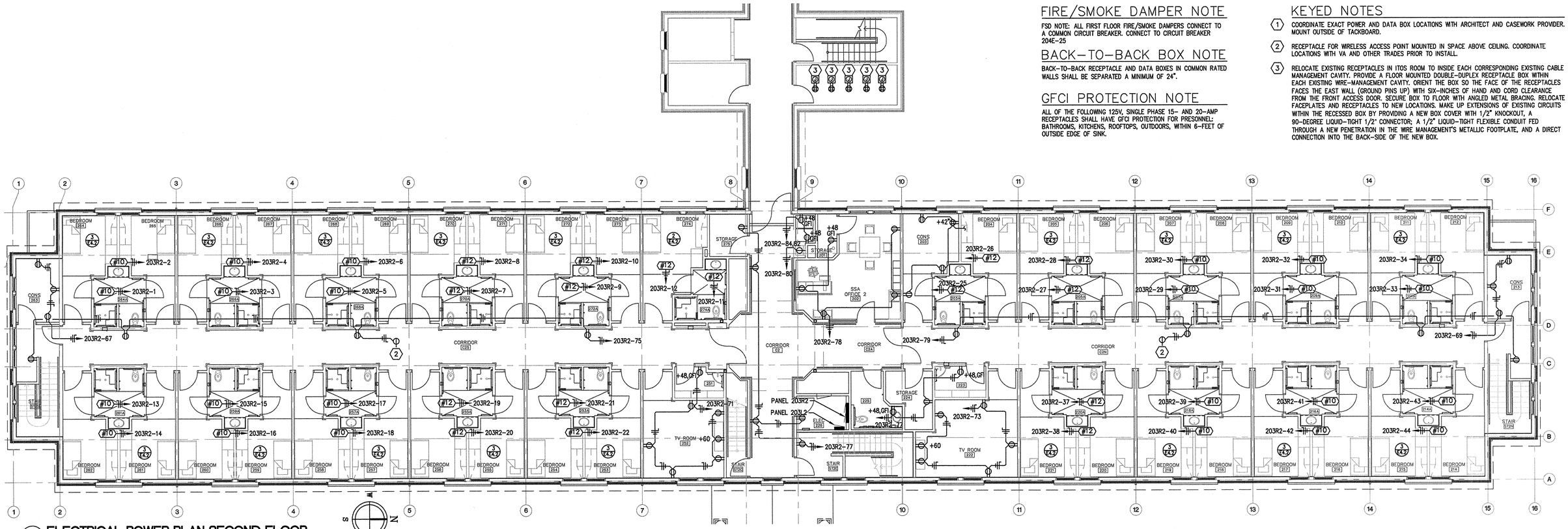

1 ELECTRICAL POWER PLAN SECOND FLOOR

SCALE: 1/8" = 1'-0"

0 4' 8' 16'

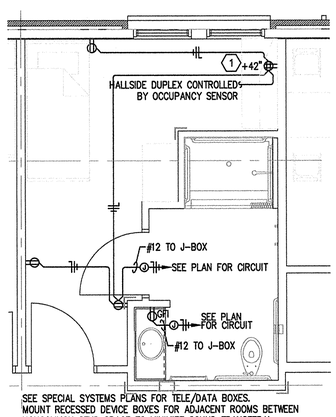

2 ENLARGED ROOM POWER PLAN

SCALE: 1/4" = 1'-0"

0 2' 4' 8'

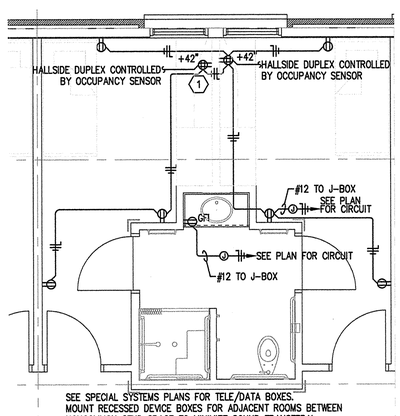

3 ENLARGED ROOM POWER PLAN

SCALE: 1/4" = 1'-0"

0 2' 4' 8'

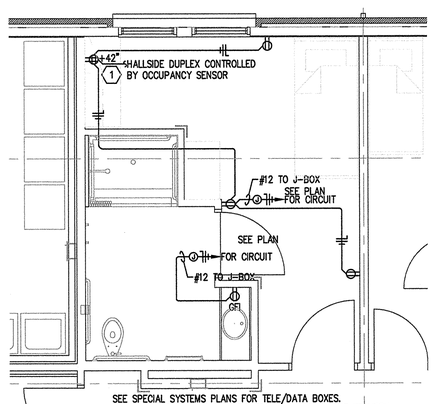

4 ENLARGED ROOM POWER PLAN

SCALE: 1/4" = 1'-0"

0 2' 4' 8'

MAI Project Number: 13-1130
MARQUESS & ASSOCIATES INC
P: 541-772-7115
F: 541-779-4079
1120 East Jackson
PO Box 490
Medford, OR, 97501

REVISIONS	DATE

REGISTERED PROFESSIONAL ENGINEER 74818PE OREGON MARCH 8, 2005 WILLIAM D. LOMICA
RENEWS: DECEMBER 31, 2014

kistler+small+white architects
RAYMOND KISTLER, ARCHITECT
552 A STREET
ASHLAND, OREGON 97520
P: 541-488-8200
F: 541-552-9512
www.kistlersmallwhite.com

DEPARTMENT OF VETERANS AFFAIRS
SOUTHERN OREGON REHABILITATION CENTER & CLINICS
8495 CRATER LAKE HIGHWAY
WHITE CITY, OREGON

DRAWING TITLE:
ELECTRICAL POWER PLAN
SECOND FLOOR

FULLY SPRINKLERED FACILITY

PROJECT TITLE		
REPLACE DOM BLDG. 203		
DRAWN BY: WDL	DATE: 4 AUGUST 2014	DRAWING NO.: E4.3
CHECK BY: WDL	VA PROJECT NO.: 692-339	DWG.15 OF 27

US DEPARTMENT OF VETERANS AFFAIRS

Aug 26, 2014 - 9:58am

S:\13-1130_Jobs\E4.x.dwg

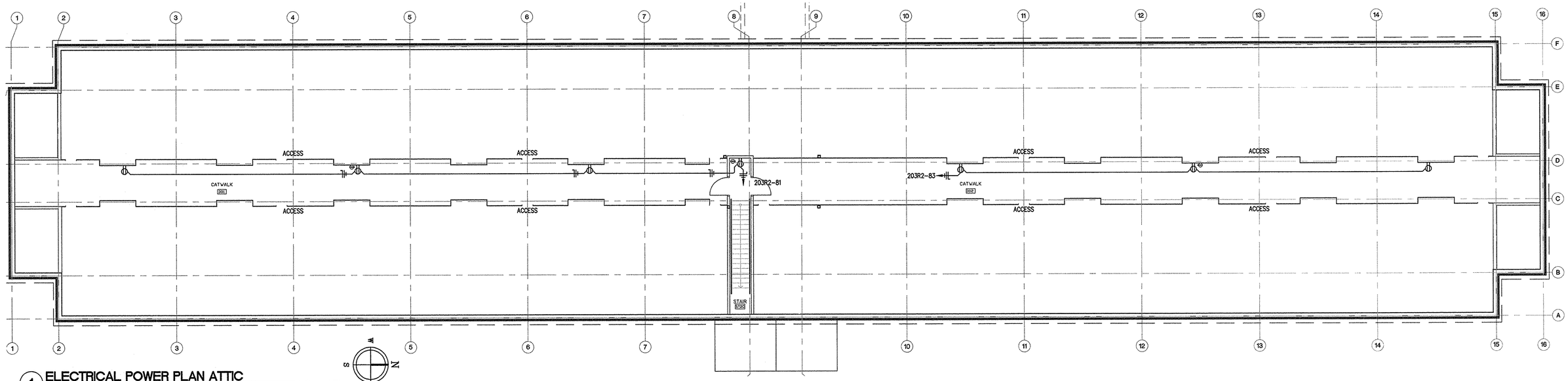

1 ELECTRICAL POWER PLAN ATTIC
SCALE: 1/8" = 1'-0"
0 4' 8' 16'

REVISIONS	DATE

REGISTERED PROFESSIONAL ENGINEER 74818PE OREGON MARCH 6, 2009 WILLIAM D. LOMICA
RENEWAL DATE: 12-31-2014

kistler+ small +white architects

RAYMOND KISTLER, ARCHITECT
552 A STREET
ASHLAND, OREGON 97520
P: 541-488-8200
F: 541-552-9512
www.kistlersmallwhite.com

DEPARTMENT OF VETERANS AFFAIRS

SOUTHERN OREGON REHABILITATION CENTER & CLINICS

8495 CRATER LAKE HIGHWAY
WHITE CITY, OREGON

DRAWING TITLE:
ELECTRICAL POWER PLAN
ATTIC

FULLY SPRINKLERED FACILITY

PROJECT TITLE
REPLACE DOM BLDG. 203

DRAWN BY:	DATE:	DRAWING NO.:
WDL	4 AUGUST 2014	E4.4
CHECK BY: WDL	VA PROJECT NO.: 692-339	DWG.16 OF 27

US DEPARTMENT OF VETERANS AFFAIRS

MAI Project Number: 13-1130
MARQUESS & ASSOCIATES INC
P: 541-772-7115
F: 541-779-4079
1120 East Jackson
PO Box 490
Medford, OR, 97501

Jul 30, 2014 - 3:09pm
S:\13-1130_elect\E4.4.dwg

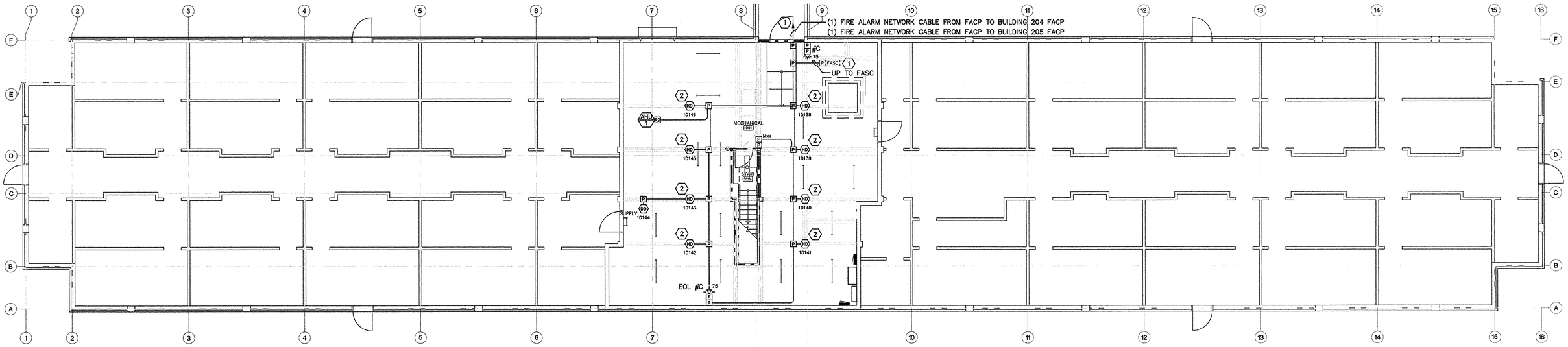

1 ELECTRICAL FIRE ALARM PLAN BASEMENT

SCALE: 1/8" = 1'-0"

0 4' 8' 16'

FIRE/SMOKE DAMPER NOTE

FSD NOTE: ALL FIRST FLOOR FSD SHALL CONNECT TO 204E-25. ALL SECOND FLOOR FSD SHALL CONNECT TO 204E-27. FIRE SMOKE DAMPERS ARE SHOWN ON FIRE ALARM DRAWINGS.

KEYED NOTES

1. CONNECT THE NEW FACP TO THE EXISTING NOTIFIER NETWORK AS FOLLOWS:
   - FACP BUILDING 203 NODE "A" TO FACP BUILDING 204 NODE "B"
   - FACP BUILDING 203 NODE "B" TO FACP BUILDING 205 NODE "A"

   ABANDON TEMPORARY BYPASS CONNECTION FROM FACP 204 TO FACP 205. REMOVE ALL UNUSED CABLE FROM BYPASS CONDUITS. ROUTE NEW CONNECTIONS IN CONDUIT VIA THE NEW TUNNEL SYSTEM USING #16/2 TWISTED WET RATED FPL CABLE AND SURGE SUPRESS AT EACH FACP AND INSTALL ISOLATOR MODULES.
2. MOUNT DETECTOR TO BOTTOM SURFACE OF BEAM FIRE RATED FACADE.

MAI Project Number: 13-1130
P: 541-772-7115
F: 541-779-4079
1120 East Jackson
PO Box 490
Medford, OR, 97501
MARQUESS & ASSOCIATES INC

REVISIONS	DATE

REGISTERED PROFESSIONAL ENGINEER 74816PE OREGON JANUARY 9, 2009 WILLIAM D. LOMICA
RENEWAL DATE: 12-31-2011

kistler+ small +white architects
RAYMOND KISTLER, ARCHITECT
552 A STREET
ASHLAND, OREGON 97520
P: 541-488-8200
F: 541-552-9512
www.kistlersmallwhite.com

DEPARTMENT OF VETERANS AFFAIRS

SOUTHERN OREGON REHABILITATION CENTER & CLINICS

8495 CRATER LAKE HIGHWAY
WHITE CITY, OREGON

DRAWING TITLE:

ELECTRICAL FIRE ALARM PLAN BASEMENT

FULLY SPRINKLERED FACILITY

PROJECT TITLE: REPLACE DOM BLDG. 203

DRAWN BY:	DATE:	DRAWING NO.:
MJL	4 AUGUST 2014	E5.1
CHECK BY: WDL	VA PROJECT NO.: 692-339	DWG.17 OF 27

US DEPARTMENT OF VETERANS AFFAIRS

Jul 30, 2014 - 3:08pm

S:\13-1130_dwg\E5.x.dwg

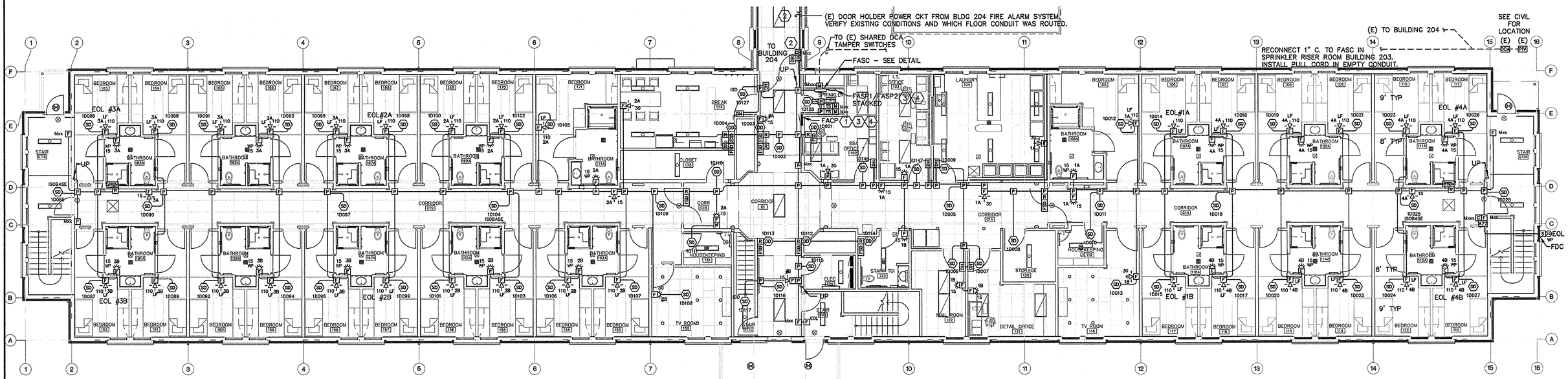

1 ELECTRICAL FIRE ALARM PLAN FIRST FLOOR

SCALE: 1/8" = 1'-0"

0 4' 8' 16'

FIRE/SMOKE DAMPER NOTE

FSD NOTE: ALL FIRST FLOOR FSD SHALL CONNECT TO 204E-25. ALL SECOND FLOOR FSD SHALL CONNECT TO 204E-27. FIRE SMOKE DAMPERS ARE SHOWN ON FIRE ALARM DRAWINGS.

KEYED NOTES

1. VERIFY LOCATION OF FACP WITH V.A. AND COORDINATE WITH ALL TRADES PRIOR TO ROUGH-IN. SEMI RECESS FACP ENCLOSURE.
2. PROVIDE NEW DOOR HOLDERS. ENERGIZE FROM RECONNECTED BUILDING 204 DOOR HOLDER POWER CIRCUIT. PROVIDE DOOR RELEASE RELAY CONTROLLED BY BUILDING 203 FACP AND MAINTAIN EXISTING DOOR RELEASE RELAY CONTROLLED BY BUILDING 204 FACP. DOORS SHALL BE RELEASED BY AN ALARM CONDITION OF EITHER FACP.
3. CONDUIT SHALL NOT PENETRATE BOTTOM SECTION OF FACP OR FASP ENCLOSURES TO AVOID INTERFERENCE WITH BATTERIES.
4. PROVIDE A 120VAC DEDICATED CIRCUIT TO THE PANELS AS FOLLOWS:
   - FACP 204E-13
   - FASP1 204E-15
   - FASP2 204E-17
   - FASP3 204E-19
   - FASP4 204E-21

BACK TO BACK BOXES NOTE:

A. BACK TO BACK BACKBOXES IN COMMON RATED WALLS SHALL BE SEPARATED A MINUMUM OF 24".

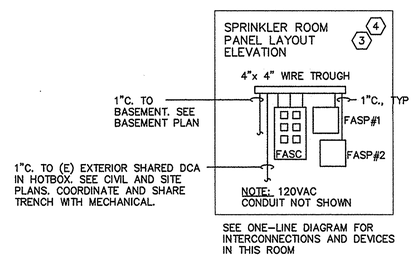

2 SPRINKLER RISER ROOM PANEL DETAIL

SCALE: NONE

MAI Project Number: 13-1130
MARQUESS & ASSOCIATES INC
P: 541-772-7115
F: 541-779-4079
1120 East Jackson
PO Box 490
Medford, OR, 97501

REVISIONS	DATE

REGISTERED PROFESSIONAL ENGINEER 74818PE OREGON MARCH 8, 2007 WILLIAM D. LOMICA
RENEWAL DATE: 12-31-2014

kistler+small+white architects

RAYMOND KISTLER, ARCHITECT
552 A STREET
ASHLAND, OREGON 97520
P: 541-488-8200
F: 541-552-9512
www.kistlersmallwhite.com

DEPARTMENT OF VETERANS AFFAIRS

SOUTHERN OREGON REHABILITATION CENTER & CLINICS

8495 CRATER LAKE HIGHWAY
WHITE CITY, OREGON

DRAWING TITLE:

ELECTRICAL FIRE ALARM PLAN FIRST FLOOR

FULLY SPRINKLERED FACILITY

PROJECT TITLE: REPLACE DOM BLDG. 203

DRAWN BY:	DATE:	DRAWING NO.:
MJL	4 AUGUST 2014	E5.2
CHECK BY: WDL	VA PROJECT NO.: 692-339	DWG.18 OF 27

US DEPARTMENT OF VETERANS AFFAIRS

Jul 30, 2014 - 3:09pm

S:\13-1130_elect\E5.x.dwg

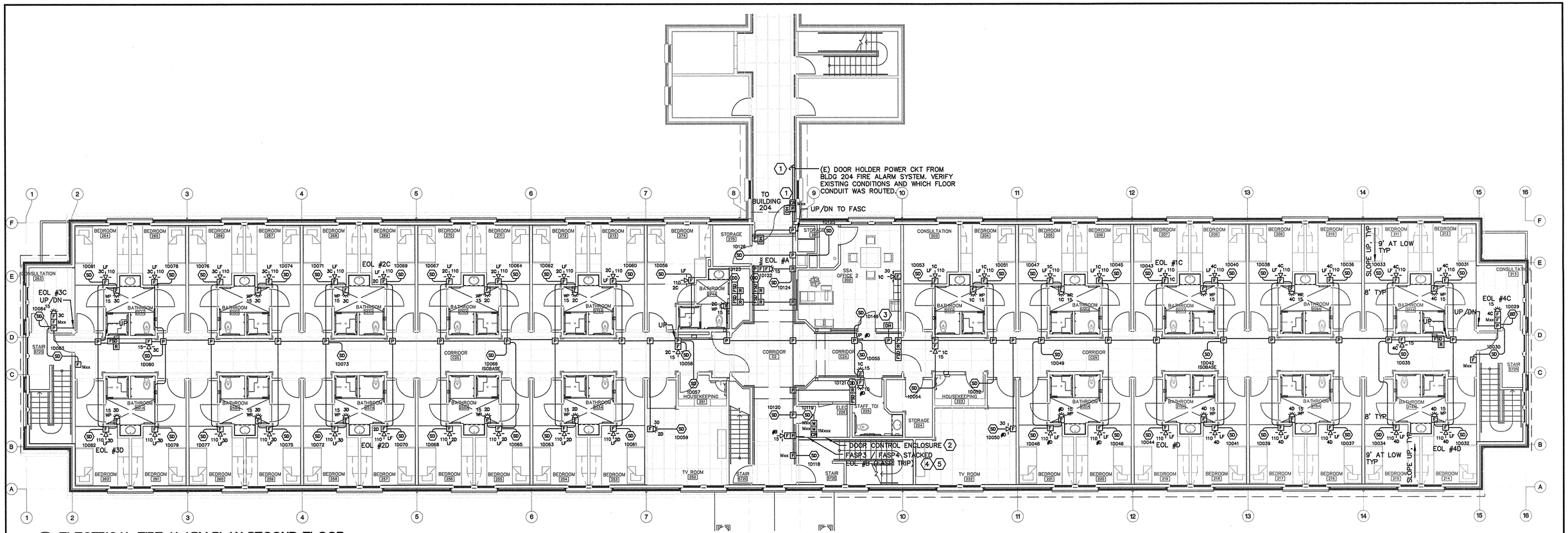

1 ELECTRICAL FIRE ALARM PLAN SECOND FLOOR

SCALE: 1/8" = 1'-0"

0 4' 8' 16'

FIRE/SMOKE DAMPER NOTE

FSD NOTE: ALL FIRST FLOOR FSD SHALL CONNECT TO 204E-25. ALL SECOND FLOOR FSD SHALL CONNECT TO 204E-27. FIRE SMOKE DAMPERS ARE SHOWN ON FIRE ALARM DRAWINGS.

KEYED NOTES

1. PROVIDE NEW DOOR HOLDERS. ENERGIZE FROM RECONNECTED BUILDING 204 DOOR HOLDER POWER CIRCUIT. PROVIDE DOOR RELEASE RELAY CONTROLLED BY BUILDING 203 FACP AND MAINTAIN EXISTING DOOR RELEASE RELAY CONTROLLED BY BUILDING 204 FACP. DOORS SHALL BE RELEASED BY AN ALARM CONDITION OF EITHER FACP.
2. PROVIDE FIRE ALARM SYSTEM OVER-RIDE OF DOOR LOCK CONTROL SYSTEM TO DISENGAGE LOCKS UPON ALARM CONDITION. SEE DETAILS.
3. COORDINATE MAGNETIC DOOR HOLDER CONFIGURATION AND LOCATION WITH DOOR HARDWARE.
4. CONDUIT SHALL NOT PENETRATE BOTTOM SECTION OF FACP OR FASP ENCLOSURES TO AVOID INTERFERENCE WITH BATTERIES.
5. PROVIDE A 120VAC DEDICATED CIRCUIT TO THE PANELS AS FOLLOWS:
   - FACP 204E-13
   - FASP1 204E-15
   - FASP2 204E-17
   - FASP3 204E-19
   - FASP4 204E-21

BACK TO BACK BOXES NOTE:

A. BACK TO BACK BACKBOXES IN COMMON RATED WALLS SHALL BE SEPARATED A MINUMUM OF 24".

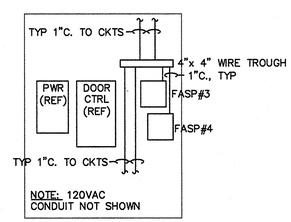

SEE ONE-LINE DIAGRAM FOR INTERCONNECTIONS AND DEVICES IN THIS ROOM

2 ELECTRICAL ROOM PANEL DETAIL

SCALE: NONE

MAI Project Number: 13-1130
P: 541-772-7115
F: 541-779-4079
1120 East Jackson
PO Box 490
Medford, OR, 97501
MARQUESS & ASSOCIATES INC

REVISIONS	DATE

REGISTERED PROFESSIONAL ENGINEER 74818PE OREGON MARCH 8, 2005 WILLIAM D. LOMICA
RENEWS: DECEMBER 31, 2014

kistler+small+white architects
RAYMOND KISTLER, ARCHITECT
552 A STREET
ASHLAND, OREGON 97520
P: 541-488-8200
F: 541-552-8512
www.kistlersmallwhite.com

DEPARTMENT OF VETERANS AFFAIRS

SOUTHERN OREGON REHABILITATION CENTER & CLINICS

8495 CRATER LAKE HIGHWAY
WHITE CITY, OREGON

DRAWING TITLE:

ELECTRICAL FIRE ALARM PLAN SECOND FLOOR

FULLY SPRINKLERED FACILITY

PROJECT TITLE: REPLACE DOM BLDG. 203

DRAWN BY:	DATE:	DRAWING NO.:
MJL	4 AUGUST 2014	E5.3
CHECK BY: WDL	VA PROJECT NO.: 692-339	DWG.19 OF 27

US DEPARTMENT OF VETERANS AFFAIRS

Aug 26, 2014 - 9:58am

S:\13-1130_elect\E5.x.dwg

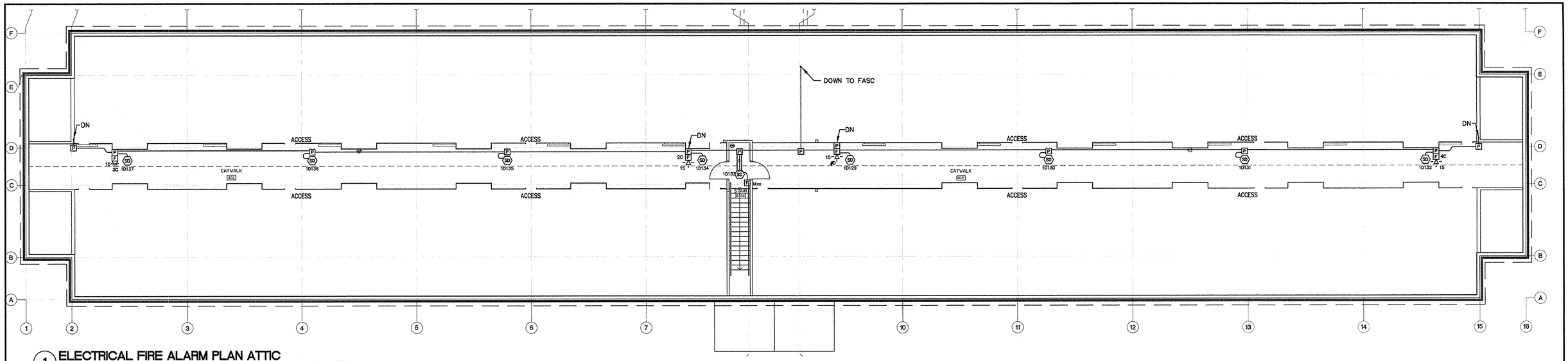

1 ELECTRICAL FIRE ALARM PLAN ATTIC

SCALE: 1/8" = 1'-0"

0 4' 8' 16'

FIRE/SMOKE DAMPER NOTE

FSD NOTE: ALL FIRST FLOOR FSD SHALL CONNECT TO 204E-25. ALL SECOND FLOOR FSD SHALL CONNECT TO 204E-27. FIRE SMOKE DAMPERS ARE SHOWN ON FIRE ALARM DRAWINGS.

MAI Project Number: 13-1130
P: 541-772-7115
F: 541-779-4079
1120 East Jackson
PO Box 490
Medford, OR, 97501
MARQUESS & ASSOCIATES INC

REVISIONS	DATE

REGISTERED PROFESSIONAL ENGINEER 74816PE OREGON MARCH 5, 2008 WILLIAM D. LONICA
RENEWAL DATE: 12-31-2014

kistler+small+white architects
RAYMOND KISTLER, ARCHITECT
552 A STREET
ASHLAND, OREGON 97520
P: 541-488-5200
F: 541-552-9512
www.kistlersmallwhite.com

DEPARTMENT OF VETERANS AFFAIRS

SOUTHERN OREGON REHABILITATION CENTER & CLINICS

8495 CRATER LAKE HIGHWAY
WHITE CITY, OREGON

DRAWING TITLE:

ELECTRICAL FIRE ALARM PLAN ATTIC

FULLY SPRINKLERED FACILITY

PROJECT TITLE
REPLACE DOM BLDG. 203

DRAWN BY:	DATE:	DRAWING NO.:
MJL	4 AUGUST 2014	E5.4
CHECK BY:	VA PROJECT NO.:	DWG.20 OF 27
WDL	692-339	

US DEPARTMENT OF VETERANS AFFAIRS

S:\13-1130_elect\E5.4.dwg
Jul 30, 2014 - 3:09pm

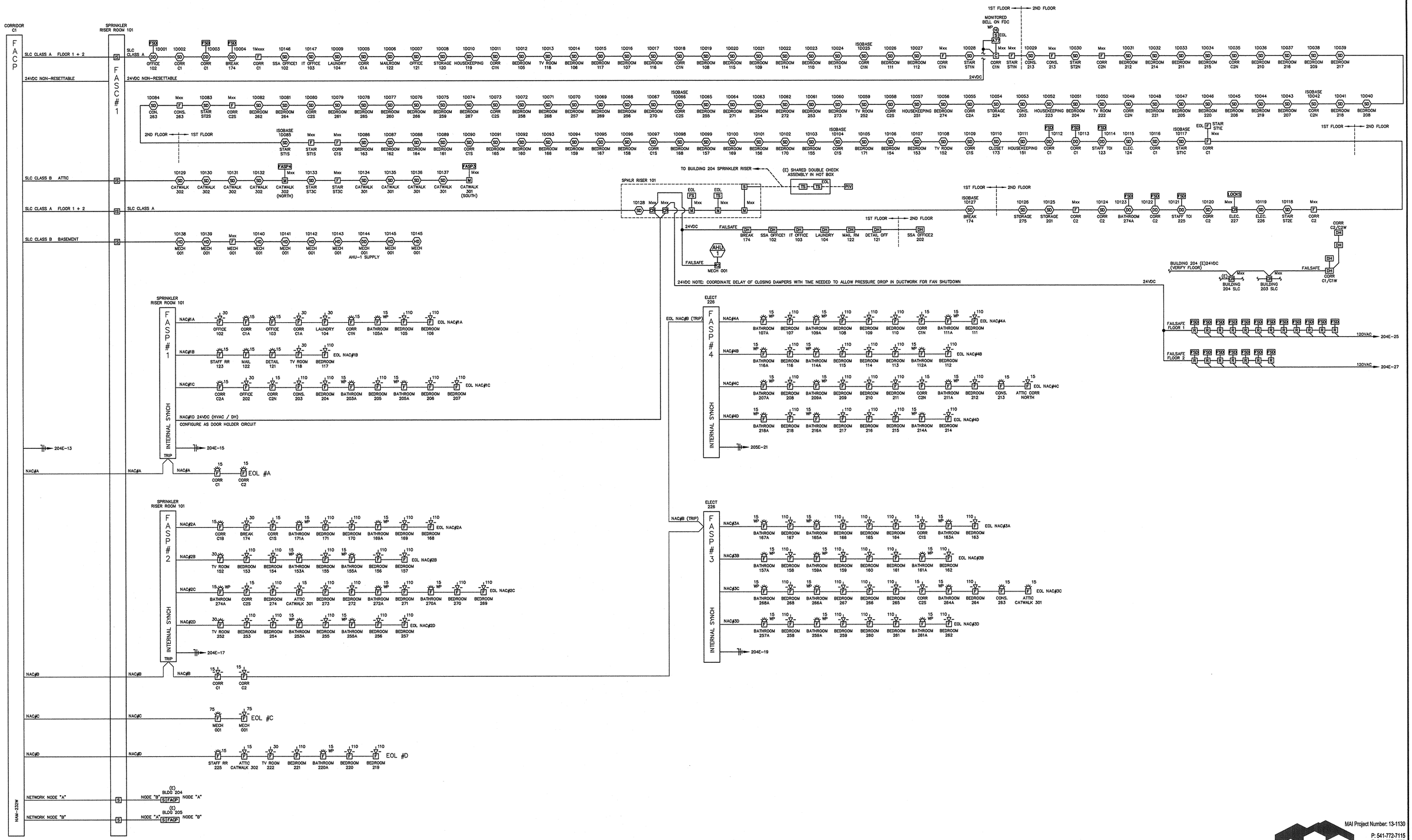

1 FIRE ALARM ONE LINE DIAGRAM

SCALE: NONE

REVISIONS	DATE

REGISTERED PROFESSIONAL ENGINEER 74818PE OREGON MARCH 8, 2005 WILLIAM D. LOMICA RENEWS: DECEMBER 31, 2014

kistler+small+white architects

RAYMOND KISTLER, ARCHITECT
552 A STREET
ASHLAND, OREGON 97520
P: 541-488-5200
F: 541-552-9512
www.kistlersmallwhite.com

DEPARTMENT OF VETERANS AFFAIRS

SOUTHERN OREGON REHABILITATION CENTER & CLINICS

8495 CRATER LAKE HIGHWAY
WHITE CITY, OREGON

DRAWING TITLE:

ELECTRICAL FIRE ALARM PLAN
RISER AND DETAILS

FULLY SPRINKLERED FACILITY

MAI Project Number: 13-1130
MARQUESS & ASSOCIATES INC
P: 541-772-7115
F: 541-779-4079
1120 East Jackson
PO Box 490
Medford, OR, 97501

PROJECT TITLE: REPLACE DOM BLDG. 203

DRAWN BY:	DATE:	DRAWING NO.:
MJL	4 AUGUST 2014	E5.5
CHECK BY: WDL	VA PROJECT NO.: 692-339	DWG.21 OF 27

US DEPARTMENT OF VETERANS AFFAIRS

Aug 26, 2014 - 9:57am

S:\13-1130_elect\E5.v.dwg

LEGEND – FIRE ALARM

- FACP — NEW FIRE ALARM CONTROL PANEL (UNIT)
  - NOTIFIER NFS-640 + CABINET SIZED FOR FUTURE LOOP EXPANDER CARD (NO SUBSTITUTIONS)
  - NOTIFIER NCM-W NETWORK COMMUNICATIONS MODULE (NO SUBSTITUTIONS)
- FASC — FIRE ALARM SIGNAL CABINET – SIZE AS REQUIRED TO HOUSE INDICATED EQUIPMENT
- FASP — FIRE ALARM SIGNAL PANEL (EXTENSION POWER SUPPLY) +54"CENTER
  - NOTIFIER FCPS-24S8 (NO SUBSTITUTIONS)
- Dxx SD — ANALOG SMOKE DETECTOR (4" SQ. x 2-1/8" w/ 3" ROUND RING) CEILING MOUNT
  - NOTIFIER FSP-851 (NO SUBSTITUTIONS)
  - NOTIFIER B710-LP BASE OR ISOLATOR BASE AS INDICATED (NO SUBSTITUTIONS)
- Dxx HD — ANALOG HEAT DETECTOR (4" SQ. x 2-1/8" w/ 3" ROUND RING) CEILING MOUNT
  - NOTIFIER FST-851R (NO SUBSTITUTIONS)
  - NOTIFIER B710-LP BASE (NO SUBSTITUTIONS)
- Mxx H — RATE ANTICIPATION HEAT DETECTOR (4" SQ. x 2-1/8" w/ 3" ROUND RING) CLG MOUNT
  - NOTIFIER 302-135 (NO SUBSTITUTIONS)
  - NOTIFIER FMM-101 (NO SUBSTITUTIONS)
- Mxx F — MANUAL PULL STATION W/ KEY (4" SQ. x 2-1/8" w/ 1-GANG RING) +48"CENTER
  - RSG RMS-1T-KL15 (OR APPROVED EQUAL)
  - NOTIFIER FMM-101 MINI MONITOR MODULE (NO SUBSTITUTIONS)
- Mxx M — ADDRESSABLE MONITOR MODULE (4" SQ. x 2 1/8" – NO RING)
  - NOTIFIER FMM-1 (NO SUBSTITUTIONS)
- Mxx CR — ADDRESSABLE CONTROL RELAY MODULE (4" SQ. x 2 1/8" – NO RING)
  - NOTIFIER FMR-1 (NO SUBSTITUTIONS)
- Mxx C — ADDRESSABLE CONTROL MODULE (4" SQ. x 2 1/8" – NO RING)
  - NOTIFIER FMC-1 (NO SUBSTITUTIONS)
- IS — ISOLATOR MODULE (4" SQ. x 2 1/8" – NO RING)
  - NOTIFIER ISO-X (NO SUBSTITUTIONS)
- A77 — END OF LINE RELAY
  - NOTIFIER A77-716B (NO SUBSTITUTIONS)
- RX R — RELAY w/ SURFACE CABINET U.O.N.
  - AIR PRODUCTS MR-101CR (OR APPROVED EQUAL) 24VDC / 24VAC / 120VAC
  - RX = AIR PRODUCTS MR-199X-13C (OR APPROVED EQUAL) 24VDC 30A CONTACTS
- I F — HORNSTROBE, WHITE (4" SQ. x 2-1/8" w/ 2-GANG RING) +80" BOTTOM OF BACK BOX
  - SYSTEM SENSOR P2W (OR APPROVED EQUAL) CANDELA AS INDICATED ON PLAN
- F — STROBE LIGHT, WHITE (4" SQ. x 2-1/8" w/ 2-GANG RING) +80" BOTTOM OF BACK BOX
  - SYSTEM SENSOR SW (OR APPROVED EQUAL) CANDELA AS INDICATED ON PLAN
- 10 S — FIRE SPRINKLER ALARM BELL, 10" GONG, WEATHER PROOF
  - WHEELOCK MB-G10-24-R (OR APPROVED EQUAL) 24VDC BELL
- I LF F — HORNSTROBE, LOW FREQUENCY, WHITE (4" SQ. x 2-1/8" w/ 2-GANG RING) +80" BOTTOM OF BACK BOX
  - SYSTEM SENSOR P2WH-LF (OR APPROVED EQUAL) CANDELA AS INDICATED ON PLAN
- DH — MAGNETIC DOOR HOLDER (4" SQ. x 2-1/8" w/ 1-GANG RING) +77" CENTER
  - RSG INDUSTRIES DH-24120-FC, FLUSH CHROME OR APPROVED EQUAL
- FSD — COMBINATION FIRE / SMOKE DAMPER – BY OTHERS (CONNECT TO ONLY)
- T — TRANSFORMER (120/24 VAC)
  - NOTIFIER 598
- S — SURGE SUPPRESSION
- J P — JUNCTION OR PULL BOX WITH COVER, RED
- FS — FIRE SPRINKLER WATERFLOW SWITCH – BY OTHERS (CONNECT TO ONLY)
- TS — FIRE SPRINKLER VALVE TAMPER SWITCH – BY OTHERS (CONNECT TO ONLY)
- RTU 2 — MECHANICAL EQUIPMENT TAG
- CONDUCTOR TAG – EACH LINE REPRESENTS ONE WIRE OR MULTI-CONDUCTOR CABLE
- CIRCUIT TAG – ONE HOT 120VAC CONDUCTOR, ONE COMMON CONDUCTOR, ONE GROUND CONDUCTOR
- (E) — EXISTING
- SLC — SIGNALING LINE CIRCUIT
- IDC — INITIATING DEVICE CIRCUIT
- NAC — NOTIFICATION APPLIANCE CIRCUIT
- DH — MAGNETIC DOOR HOLDER CIRCUIT
- EOL — END OF LINE DEVICE
- ELR — END OF LINE RESISTOR OR RELAY
- CKT — CIRCUIT
- AUX — 24VDC AUXILIARY POWER FROM FACP OR FASP
- RST — 24VDC RESETTABLE POWER FROM FACP OR FASP
- UON — UNLESS OTHERWISE NOTED

FIRE ALARM SYSTEM OPERATIONAL MATRIX

FACP = FIRE ALARM CONTROL PANEL
R.S. = EXISTING REMOTE ANNUNCIATOR AT POLICE BLDG 202 AND DACT CONNECTION TO OFF SITE MONITORING

	FACP ALARM + SIGNAL R.S.	FACP TROUBLE + SIGNAL R.S.	FACP SUPERVISORY + SIGNAL R.S.	ACTIVATE SOUNDERS & STROBES	RELAY DCT INITIATES HVAC SHUT DOWN	RELEASE DOOR HOLD OPEN DEVICES	OVERRIDE EGRESS DOOR LOCKS				REMARKS
ALARM ACTIVATION –											
MANUAL PULL STATION	●			●	●	●	●				
AREA SMOKE OR HEAT DETECTOR	●			●	●	●	●				
WATERFLOW OR PRESSURE SWITCH	●			●	●	●	●				
TROUBLE ACTIVATION –											
INITIATING DEVICES		●									
NOTIFICATION DEVICES		●									
MONITORED SPRINKLER CIRCUITS/DEVICES		●									
SUPERVISORY ACTIVATION –											
SUPERVISED SPRINKLER VALVES			●								
FIRE ALARM PANEL TROUBLE		●									
A.C. POWER FAILURE		●									(RANDOM DELAY TO R.S.)

GENERAL FIRE ALARM SYSTEM NOTES:

A. SEAL ALL PENETRATIONS OF FIRE RESISTIVE CONSTRUCTION.

B. PROVIDE RED MARKING AND LABEL ALL OVER-CURRENT PROTECTION DEVICES SERVING FIRE ALARM SYSTEM CIRCUITS "FIRE ALARM CIRCUIT CONTROL" .

C. IDENTIFY FIRE ALARM CIRCUITS AT ALL TERMINAL AND JUNCTION LOCATIONS PER NEC ARTICLE 760.

D. SMOKE DETECTOR PLACEMENT IS BASED UPON THE ARCHITECT'S REFLECTED CEILING PLAN.

E. SMOKE DETECTORS SHALL BE LOCATED MINIMUM 36" FROM AIR HANDLING GRILLES.

F. FIRE ALARM CIRCUIT CONDUCTORS SHALL BE CONTINUOUS AND SHALL NOT BE SPLICED EXCEPT AT DEVICE LOCATIONS.

G. ALL CONDUIT SHALL BE 3/4" EMT MINIMUM U.O.N., 40% FILL MAXIMUM.

H. CIRCUIT WIRING SHALL BE AS FOLLOWS:
1. SLC = FPLR CABLE #16/2 CONDUCTOR U.O.N. (RED / BLK)
2. IDC, NAC, AUX, AND DH = #14AWG 19/W STRANDED THHN / THWN U.O.N. #12 ALLOWED FOR NAC CIRCUITS TO REDUCE VOLTAGE DROP AS REQUIRED.
3. NETWORK = 16/2 TWISTED, WET LISTED FPL

I. DESIGN BASIS IS PER NFPA-101 CHAPTER 28 "NEW HOTELS AND DORMITORIES" AND OREGON STRUCTURAL SPECIALTY CODE "R2 OCCUPANCY". DEVIATIONS EXCEEDING MINIMUM REQUIREMENTS APPROVED BY THE LOCAL AND V.A. AHJ ARE AS FOLLOWS:
- SYSTEM DETECTORS IN SLEEPING ROOMS WHICH INITIATE A TOTAL EVACUATION ALARM SIGNAL IN BUILDING 205
- AREA SMOKE DETECTION IN SLEEPING WING EGRESS CORRIDORS
- AREA SMOKE DETECTION IN ATTIC AND BASEMENT SPACES ABOVE AND BELOW SLEEPING ROOMS
- SHUT DOWN OF ALL AIR HANDLING UNITS UPON GENERAL ALARM TO PREVENT THE SPREAD OF SMOKE AND FANNING FLAMES
- ALL SLEEPING ROOMS SHALL BE ACCESSIBLE

J. BACK TO BACK BACKBOXES IN COMMON RATED WALLS SHALL BE SEPARATED A MINUMUM OF 24".

K. PROVIDE BATTERY CAPACITY FOR 24 HOURS OF SYSTEM STANDBY FOLLOWED BY 5 MINUTES OF ALARM.

MAI Project Number: 13-1130
MARQUESS & ASSOCIATES INC
P: 541-772-7115
F: 541-779-4079
1120 East Jackson
PO Box 490
Medford, OR, 97501

REVISIONS	DATE

REGISTERED PROFESSIONAL ENGINEER 74816PE OREGON MARCH 9, 2005 WILLIAM D. LOMICA
RENEWAL DATE: 12-31-2014

kistler + small + white architects
RAYMOND KISTLER, ARCHITECT
552 A STREET
ASHLAND, OREGON 97520
P: 541-488-8200
F: 541-552-9512
www.kistlersmallwhite.com

DEPARTMENT OF VETERANS AFFAIRS

SOUTHERN OREGON REHABILITATION CENTER & CLINICS

8495 CRATER LAKE HIGHWAY
WHITE CITY, OREGON

DRAWING TITLE:

ELECTRICAL FIRE ALARM PLAN
LEGEND AND NOTES

FULLY SPRINKLERED FACILITY

PROJECT TITLE
REPLACE DOM BLDG. 203

DRAWN BY:	DATE:	DRAWING NO.:
MJL	4 AUGUST 2014	E5.6
CHECK BY:	VA PROJECT NO.:	DWG.22 OF 27
WDL	692-339	

US DEPARTMENT OF VETERANS AFFAIRS

Jul 30, 2014 - 3:10pm
S:\13-1130_dwg\E5.6.dwg

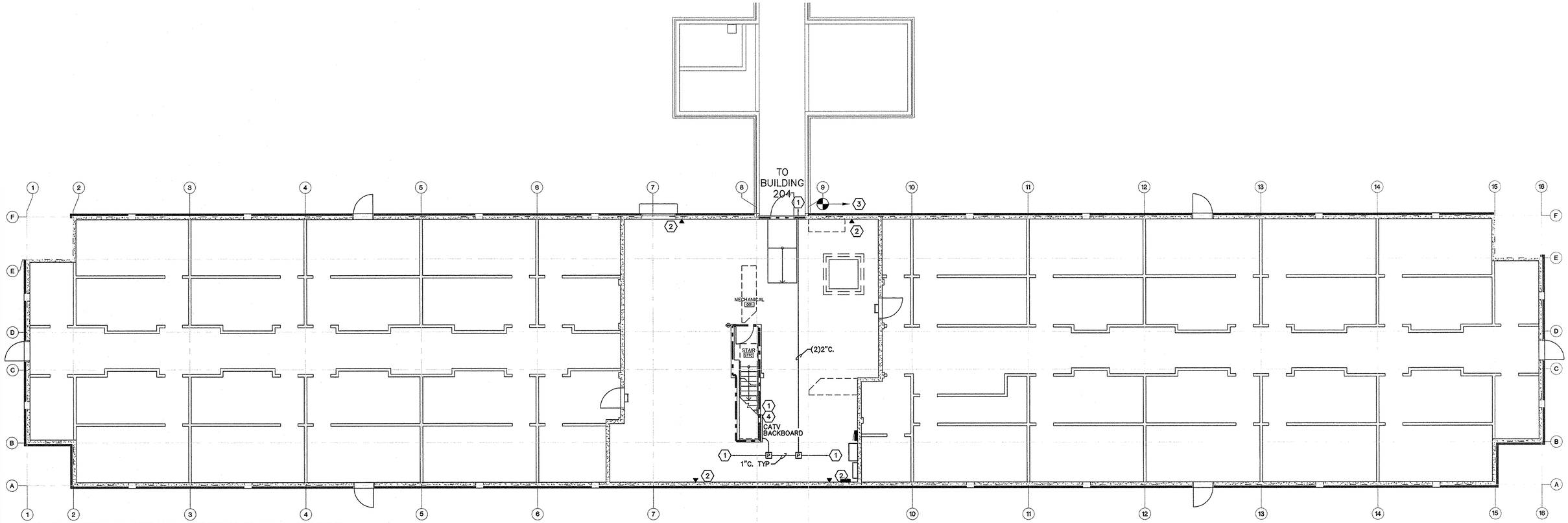

1 ELECTRICAL SPECIAL SYSTEMS PLAN BASEMENT

SCALE: 1/8" = 1'-0"

0 4' 8' 16'

GENERAL NOTES:

A. INDEX AND NUMBER ALL DATACOM OUTLETS AND CABLES PER V.A. STANDARD.

B. VOICE/DATA CABLING IN ACCESSIBLE CRAWL OR ATTIC SPACES TO BE RUN IN "J"-HOOKS. CABLING IN WALLS, SLABS, OR AREAS OF LIMITED ACCESS SHALL BE IN CONDUIT. ONLY DATACOM CABLING SHALL BE ROUTED IN CABLE TRAY.

KEYED NOTES

1. EXTEND EXISTING CATV PATHWAY FROM BUILDING 204 EXISTING CATV BACKBOARD TO NEW CATV BACKBOARD AND ROUTE ONE RGU6 CABLE. PROVIDE ONE RGU6 HOME RUN IN 1" CONDUIT TO EACH CATV WALL OUTLET LOCATION INDICATED ON PLANS. WIRING METHODS AND DEVICES SHALL COMPLY WITH V.A., CATV SERVICE PROVIDER STANDARDS, AND GOVORNING CODES.

2. SEE WALL OUTLET DETAIL FOR TYPICAL UTILITY SPACE. PROVIDE, TERMINATE, TEST AND CERTIFY 4 RUNS OF CAT6 DATACOM CABLE FROM EACH WALL OUTLET TO PATCH PANELS IN DATA ROOM. TERMINATE CABLES PER TIA/EIA-568-A STANDARD.

3. BEGIN DATA PORT NUMBERING AT THIS CORNER AS A CONTINUATION OF THE LAST PATCH PANEL USED FOR FIRST FLOOR. CONTINUE NUMBERING IN A CLOCKWISE DIRECTION BACK TO THIS POINT. FILL ALL PORTS IN EACH PATCH PANEL AND CONTINUE TO NEXT.

4. PROVIDE NEW CATV BACKBOARD USING 3/4" FIRE RESISTANT PLYWOOD. PAINT WHITE. PROVIDE ALL SPLITTERS, TERMINAL BLOCKS AND SURGE SUPPRESSION AS REQUIRED PER CATV SERVICE PROVIDER STANDARDS AND APPLICABLE CODES AND STANDARDS. PROVIDE ONE DOUBLE DUPLEX MOUNTED TO BACKBOARD SERVED BY A DEDICATED 20A CIRCUIT.

MAI Project Number: 13-1130
MARQUESS & ASSOCIATES INC
P: 541-772-7115
F: 541-779-4079
1120 East Jackson
PO Box 490
Medford, OR, 97501

REVISIONS	DATE

REGISTERED PROFESSIONAL ENGINEER 74816PE OREGON MARCH 6, 2009 WILLIAM D. LOMICA
RENEWAL DATE: 12-31-2014

kistler + small + white architects
RAYMOND KISTLER, ARCHITECT
552 A STREET
ASHLAND, OREGON 97520
P: 541-488-8200
F: 541-552-9512
www.kistlersmallwhite.com

DEPARTMENT OF VETERANS AFFAIRS

SOUTHERN OREGON REHABILITATION CENTER & CLINICS

8495 CRATER LAKE HIGHWAY
WHITE CITY, OREGON

DRAWING TITLE:

ELECTRICAL SPECIAL SYSTEMS PLAN BASEMENT

FULLY SPRINKLERED FACILITY

PROJECT TITLE
REPLACE DOM BLDG. 203

DRAWN BY:	DATE:	DRAWING NO.:
MJL	4 AUGUST 2014	E6.1
CHECK BY:	VA PROJECT NO.:	
WDL	692-339	DWG.23 OF 27

US DEPARTMENT OF VETERANS AFFAIRS

C:\Users\k55ewl\appdata\local\temp\AcPublish_2172\E6.x.dwg Jul 30, 2014 - 2:23pm

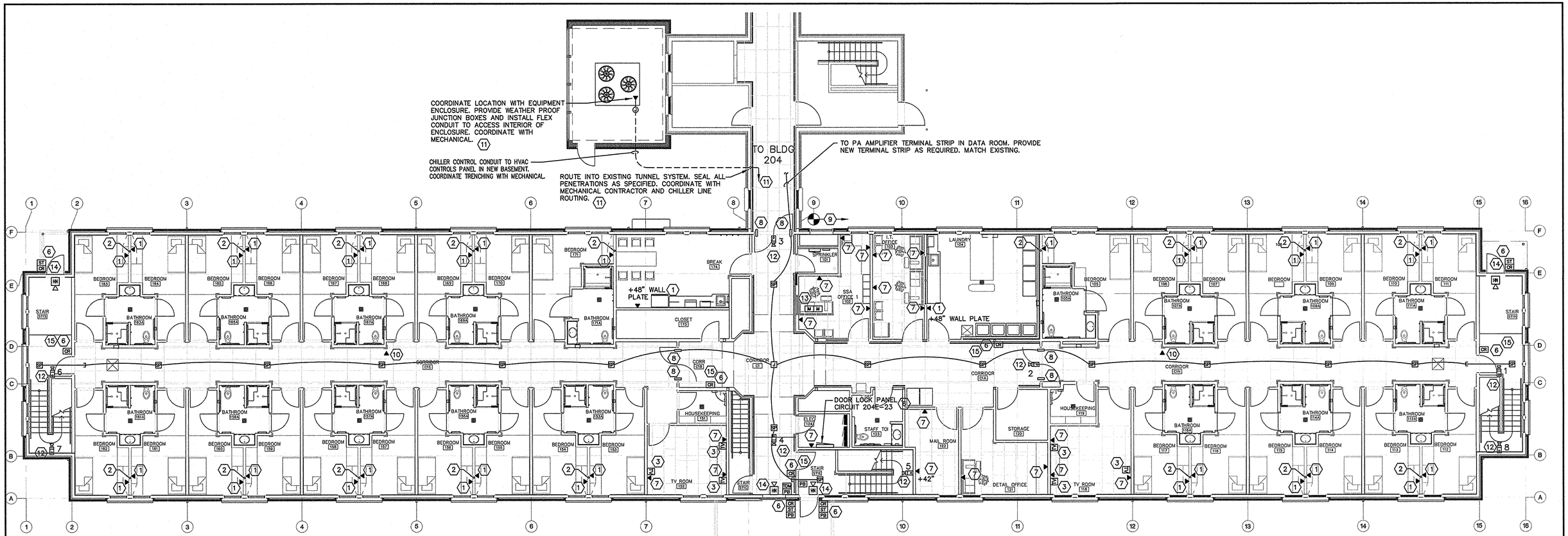

1 ELECTRICAL SPECIAL SYSTEMS PLAN FIRST FLOOR

SCALE: 1/8" = 1'-0" 0 4' 8' 16'

GENERAL NOTES:

A. INDEX AND NUMBER ALL DATACOM OUTLETS AND CABLES PER V.A. STANDARD.

B. DATACOM, PA, AND EGRESS LOCK CONTROL CABLING IN ACCESSIBLE CRAWL OR ATTIC SPACES SHALL BE RUN IN "J"-HOOKS. CABLING IN WALLS, SLABS, OR AREAS OF LIMITED ACCESS SHALL BE IN CONDUIT. ONLY DATACOM CABLING SHALL BE ROUTED IN CABLE TRAY.

C. CONTRACTOR SHALL VERIFY EXISTING PA SYSTEM EQUIPMENT AND INTERFACES TO OTHER SYSTEMS. CONNECTION OF NEW SPEAKERS SHALL COMPLY TO APPLICABLE PORTIONS OF SPECIFICATION RELATING TO THIS FACILITY (INCLUDING ATTENUATION).

D. PA (PUBLIC ADDRESS) SYSTEM WIRING SHALL BE:
- SPEAKER TO SPEAKER = CMP CABLE, #20/2 CONDUCTOR
- SPEAKER TO AMPLIFIER = HOME RUN TO PA AMP IN BUILDING 203/204 DATA ROOM USING #16/2 CMP CABLE. SEE SITE PLAN.

E. PUBLIC ADDRESS SPEAKER AND BAFFLE SHALL BE IN T-BAR MOUNTED BACKBOX (SHEET ROCK MOUNT WHERE APPLICABLE, SEE PLAN). STYLE SHALL MATCH QUAM C10 SERIES 8" CEILING LOUDSPEAKER, TYPE BU TRANSFORMER, TYPE WC BAFFLE, TYPE ERDB BACKBOX WITH SSB-2 SUPPORT DEVICE. SEE SPECIFICATION FOR ELECTRICAL CHARACTERISTIC REQUIREMENTS.

F. BACK TO BACK BACKBOXES IN COMMON RATED WALLS SHALL BE SEPARATED A MINUMUM OF 24".

SECURITY DEVICE LEGEND

CR ELECTRONIC CARD SWIPE READER, MAGNETIC LOCKS AND Z-BRACKETS.

M VIDEO MONITOR

FIXED HIGH-DEFINITION VIDEO CAMERA.

PB ENTRY/EXIT PB 18-2C

TDM TIME DELAY 18-2C

ST DOOR STATUS 22-2C

HN ALARM HORN 18-2C

ACCESS CONTROLLER

KEYED NOTES

1. SEE WALL OUTLET DETAIL FOR TYPICAL RESIDENTS ROOM. PROVIDE, TERMINATE, TEST AND CERTIFY 2 RUNS OF CAT6 DATACOM CABLE FROM EACH WALL OUTLET TO PATCH PANELS IN DATA ROOM. TERMINATE CABLES PER TIA/EIA-568-A STANDARD.
2. TYPICAL CONDUIT ROUTE FROM DATA WALL OUTLETS TO CABLE TRAY IN ATTIC. MINIMUM BEND RADIUS SHALL BE 6". REFER TO ATTIC PLAN AND SECTION.
3. CATV WALL OUTLET AS SPECIFIED. SEE BASEMENT PLAN FOR WIRING.
6. CONTRACTOR SHALL INSTALL A NEW CARD ACCESS CONTROL SYSTEM COMPATABLE WITH EXISTING CAMPUS SYSTEM, CONTROLLERS, AND SOFTWARE. CONTRACTOR SHALL PROVIDE ALL SOFTWARE, PROGRAMMING, CONDUCTORS, TERMINATIONS AND TESTING TO PROVIDE A COMPLETE AND FUNCTIONAL SYSTEM. COORDINATE WITH DOOR HARDWARE. COORDINATE WITH FIRE ALARM CONTRACTOR TO PROVIDE LOCK RELEASE BY THE FIRE ALARM SYSTEM AND UPON LOSS OF POWER. PROVIDE NEW MAG LOCKS AT INTERIOR CORRIDORS AND ELECTRIC STRIKES AT EXTERIOR DOORS. PROVIDE MOTION SENSORS TO RELEASE LOCKS TO EGRESS THE CONTROLLED AREAS. PROVIDE INTERFACE FROM NEW LOCAL DOOR CONTROL PANEL IN ELECTRICAL ROOM 124 TO EXISTING MASTER STATION IN POLICE STATION BUILDING 202 VIA TCP/IP DATA NETWORK. CONTRACTOR SHALL PROVIDE ALL CONTROL PANELS AND ENCLOSURES. ALL CONTROL PANELS SHALL BE LOCKABLE AND KEYED TO MATCH EXISTING CAMPUS SYSTEM SECURITY ENCLOSURES. KEYS SHALL BE DELIVERED TO THE COTR AT PROJECT CLOSEOUT SEE DETAILS. ACCESS CONTROLLER SHALL MEET OR EXCEED FEATURES AND SPECIFICATIONS OF ANDOVER CONTINUUM ACX SERIES.
7. SEE WALL OUTLET DETAIL FOR TYPICAL UTILITY SPACE. PROVIDE, TERMINATE, TEST AND CERTIFY 4 RUNS OF CAT6 DATACOM CABLE FROM EACH WALL OUTLET TO PATCH PANELS IN DATA ROOM. TERMINATE CABLES PER TIA/EIA-568-A STANDARD.
8. PROVIDE AND INSTALL CABLE PATHWAY FIRE STOP DEVICE AT ALL ACCESSIBLE OPEN CABLE PENETRATIONS OF RATED CONSTRUCTION – SPECIFIED TECHNOLOGIES, INC. "EZ-PATH" SERIES 44 OR APPROVED EQUAL.
9. BEGIN DATA PORT NUMBERING AT THIS CORNER AS PATCH PANEL "A", PORT NUMBER 1. CONTINUE NUMBERING IN A CLOCKWISE DIRECTION BACK TO THIS POINT. FILL ALL PORTS IN EACH PATCH PANEL AND CONTINUE TO NEXT.
10. PROVIDE A DATA PORT OUTLET ABOVE THE CEILING TILE FOR OWNER PROVIDED WIRELESS ACCESS POINT. COORDINATE LOCATION WITH OWNER, EQUIPMENT POWER CORD LENGTH, AND TELEMETRY CONSIDERATIONS. SEE TYPICAL 2 PORT WALL OUTLET DETAIL. PROVIDE, TERMINATE, TEST AND CERTIFY 2 RUNS OF CAT6 DATACOM CABLE FROM OUTLET TO PATCH PANELS IN DATA ROOM. TERMINATE CABLES PER TIA/EIA-568-A STANDARD.
11. PROVIDE, TERMINATE, TEST AND CERTIFY 1 RUN OF CAT6 DATACOM CABLE FROM CHILLER UNIT TO JOHNSON CONTROLS PANEL AND THEN ON TO DATA ROOM. TERMINATE CABLES PER TIA/EIA-568-A STANDARD.
12. ROUTE CAMERA CABLES BACK TO EXISTING CONTROLLER IN BUILDING 203/204 2ND FLOOR DATA ROOM.
13. MONITORS SHALL DISPLAY MAXIMUM OF FOUR CAMERA FIELDS OF VIEW. COORDINATE FINAL LOCATION OF MONITORS WITH VA SECURITY STAFF.
14. PROGRAM DOOR STATUS SWITCH TO ACTIVATE LOCAL ALARM HORN WHEN DOOR IS OPENED AFTER HOURS AND AUTOMATICALLY REST WHEN THE DOOR CLOSES. ALARM SOUND LEVELS SHALL BE 80db MINIMUM UP TO 90db MAXIMUM WITHIN THE CONFIGURATION OF THE PROTECTED AREA. PROVIDE NOTIFICATION SIGNAGE "Emergency Exit Alarm Will Sound If Door Is Opened". SEE SPECIFICATIONS FOR ANY ADDITIONAL SIGNAGE REQUIREMENTS.
15. PROVIDE CONTROLS TO MONITOR THE ENTRANCE AND EXIT THROUGH THIS DOOR.

MAI Project Number: 13-1130
MARQUESS & ASSOCIATES INC
P: 541-772-7115
F: 541-779-4079
1120 East Jackson
PO Box 490
Medford, OR, 97501

REVISIONS	DATE

REGISTERED PROFESSIONAL ENGINEER 74815PE OREGON WILLIAM D. LOMICA RENEWAL DATE: 12-31-2015

kistler+small+white architects

RAYMOND KISTLER, ARCHITECT
552 A STREET
ASHLAND, OREGON 97520
P: 541-488-8200
F: 541-552-9512
www.kistlersmallwhite.com

DEPARTMENT OF VETERANS AFFAIRS

SOUTHERN OREGON REHABILITATION CENTER & CLINICS

8495 CRATER LAKE HIGHWAY
WHITE CITY, OREGON

DRAWING TITLE:

ELECTRICAL SPECIAL SYSTEMS PLAN FIRST FLOOR

FULLY SPRINKLERED FACILITY

PROJECT TITLE
REPLACE DOM BLDG. 203

DRAWN BY:	DATE:	DRAWING NO.:
MJL	4 AUGUST 2014	E6.2
CHECK BY:	VA PROJECT NO.:	
WDL	692-339	DWG.24 OF 27

US DEPARTMENT OF VETERANS AFFAIRS

C:\Users\d50wil\appdata\local\temp\AcPublish_2172\E6.2.dwg
Jul 30, 2014 - 2:24pm

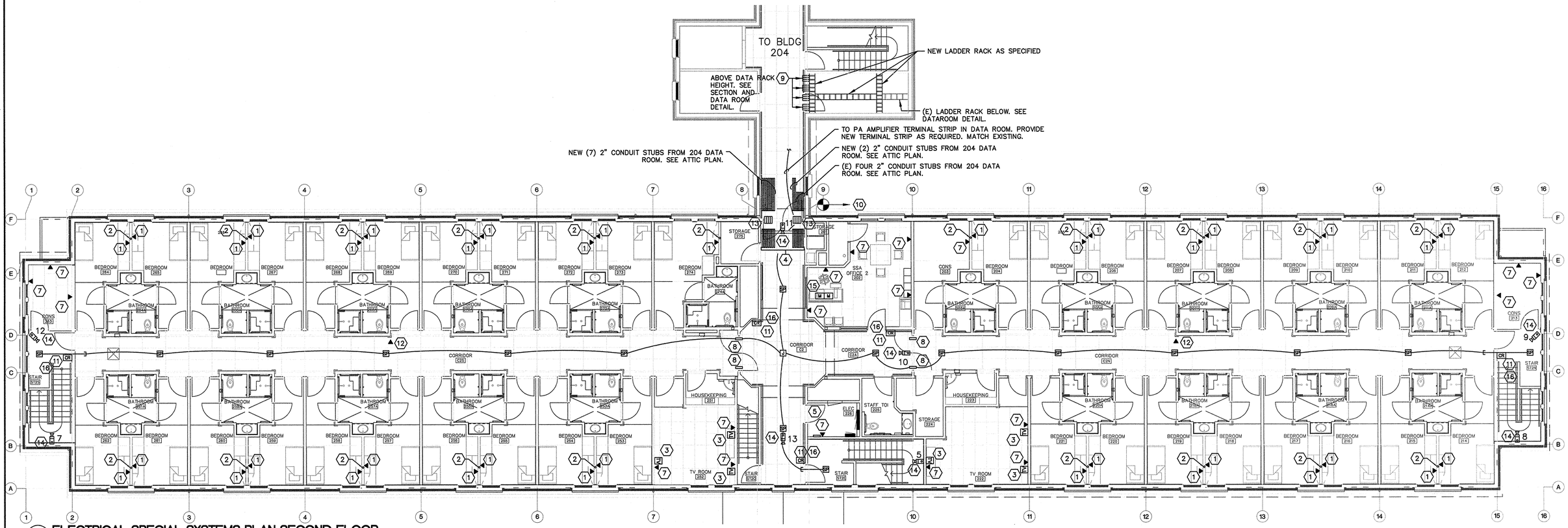

1 ELECTRICAL SPECIAL SYSTEMS PLAN SECOND FLOOR

SCALE: 1/8" = 1'-0"

0 4' 8' 16'

GENERAL NOTES:

A. SOME CIRCUITS ARE SHOWN AS SINGLE CIRCUIT HOME RUNS FOR CLARITY PURPOSES. CIRCUITS MAY BE COMBINED IN HOME RUNS AS APPROPRIATE AND AS ALLOWED BY CODE (MAX. THREE CIRCUITS PER CONDUIT). UNLESS OTHERWISE NOTED, CIRCUITS CONNECTED TO 20 AMP, SINGLE POLE CIRCUIT BREAKERS SHALL BE CONNECTED WITH TWO #12CU & ONE #12CU GROUND IN 1/2" CONDUIT.

B. INDEX AND NUMBER ALL DATACOM OUTLETS AND CABLES PER V.A. STANDARD.

C. VOICE/DATA CABLING IN ACCESSIBLE CRAWL OR ATTIC SPACES TO BE RUN IN "J"-HOOKS. CABLING IN WALLS, SLABS, OR AREAS OF LIMITED ACCESS SHALL BE IN CONDUIT. ONLY DATACOM CABLING SHALL BE ROUTED IN CABLE TRAY.

D. CONTRACTOR SHALL VERIFY EXISTING PA SYSTEM EQUIPMENT AND INTERFACES TO OTHER SYSTEMS. CONNECTION OF NEW SPEAKERS MUST COMPLY TO APPLICABLE PORTIONS OF SPECIFICATION RELATING TO THIS FACILITY (INCLUDING ATTENUATION).

E. PA (PUBLIC ADDRESS) SYSTEM WIRING SHALL BE:
- SPEAKER TO SPEAKER = CMP CABLE, #20/2 CONDUCTOR
- SPEAKER TO AMPLIFIER = HOME RUN TO PA AMP IN BUILDING 203/204 DATA ROOM USING #16/2 CMP CABLE. SEE SITE PLAN.

F. PUBLIC ADDRESS SPEAKER AND BAFFLE SHALL BE IN T-BAR MOUNTED BACKBOX. STYLE TO MATCH QUAM C10 SERIES 8" CEILING LOUDSPEAKER, TYPE BU TRANSFORMER, TYPE WC BAFFLE, TYPE ERD8 BACKBOX WITH SSB-2 SUPPORT DEVICE. SEE SPECIFICATION FOR ELECTRICAL CHARACTERISTIC REQUIREMENTS.

G. BACK TO BACK BACKBOXES IN COMMON RATED WALLS SHALL BE SEPARATED A MINUMUM OF 24".

SECURITY DEVICE LEGEND

CR	ELECTRONIC CARD SWIPE READER, MAGNETIC LOCKS AND Z-BRACKETS.
M	VIDEO MONITOR
CCTV	FIXED HIGH-DEFINITION VIDEO CAMERA.
PB	ENTRY/EXIT PB 18-2C
TDM	TIME DELAY 18-2C
ST	DOOR STATUS 22-2C
HN	ALARM HORN 18-2C
	ACCESS CONTROLLER

KEYED NOTES

1. SEE WALL OUTLET DETAIL FOR TYPICAL DORM ROOMS. PROVIDE, TERMINATE, TEST AND CERTIFY 2 RUNS OF CAT6 DATACOM CABLE FROM EACH WALL OUTLET TO PATCH PANELS IN DATA ROOM. TERMINATE CABLES PER TIA/EIA-568-A STANDARD.
2. TYPICAL CONDUIT ROUTE FROM DATA WALL OUTLETS TO CABLE TRAY IN ATTIC. REFER TO ATTIC PLAN AND SECTION.
3. PROVIDE 1" CONDUIT AND PULL CORD TO BASEMENT FOR CATV FEED, TYP. ALL OUTLETS. COORDINATE WITH OWNER.
4. ROUTE THIRTEEN 2"C. FROM CORRIDOR CEILING SPACE TO CABLE TRAY IN ATTIC. PROVIDE PULL CORDS IN EMPTY CONDUIT FOR FUTURE AND ROUTE 24 CAT6 CABLE MAXIMUM PER CONDUIT (40% FILL). REFER TO BUILDING SECTION AND ATTIC PLAN.
5. PROVIDE 2" EMT CONDUIT FROM BUILDING 204 DATA ROOM TO BUILDING 203 ELECTRICAL ROOM. COORDINATE LOCATION OF STUB OUTS WITH V.A.
7. SEE WALL OUTLET DETAIL FOR TYPICAL OFFICE AND UTILITY SPACES. PROVIDE, TERMINATE, TEST AND CERTIFY 4 RUNS OF CAT6 DATACOM CABLE FROM EACH WALL OUTLET TO PATCH PANELS IN DATA ROOM. TERMINATE CABLES PER TIA/EIA-568-A STANDARD. COORDINATE ROUGH-INS WITH POWER.
8. PROVIDE AND INSTALL CABLE PATHWAY FIRE STOP DEVICE AT ALL ACCESSIBLE OPEN CABLE PENETRATIONS OF RATED CONSTRUCTION – SPECIFIED TECHNOLOGIES, INC. "EZ-PATH" SERIES 44 OR APPROVED EQUAL.
9. PROVIDE AND INSTALL 12 CABLE PATHWAY FIRE STOP DEVICES (FOUR GROUPS OF THREE) ALONG CORRIDOR / DATA ROOM SHARED WALL – SPECIFIED TECHNOLOGIES, INC. "EZ-PATH" SERIES 44, EACH GROUP WITH THREE GANG MOUNTING PLATE AND POSITIONING CLAMPS OR APPROVED EQUAL. SEE DATA ROOM DETAIL.
10. BEGIN DATA PORT NUMBERING AT THIS CORNER AS PATCH PANEL "A", PORT NUMBER 1. CONTINUE NUMBERING IN A CLOCKWISE DIRECTION BACK TO THIS POINT. FILL ALL PORTS IN EACH PATCH PANEL AND CONTINUE TO NEXT.

KEYED NOTES CONTINUED

11. CONTRACTOR SHALL INSTALL A NEW CARD ACCESS CONTROL SYSTEM COMPATABLE WITH EXISTING CAMPUS SYSTEM, CONTROLLERS, AND SOFTWARE. CONTRACTOR SHALL PROVIDE ALL SOFTWARE, PROGRAMMING, CONDUCTORS, TERMINATIONS AND TESTING TO PROVIDE A COMPLETE AND FUNCTIONAL SYSTEM. COORDINATE WITH DOOR HARDWARE. COORDINATE WITH FIRE ALARM CONTRACTOR TO PROVIDE LOCK RELEASE BY THE FIRE ALARM SYSTEM AND UPON LOSS OF POWER. PROVIDE NEW MAG LOCKS AT INTERIOR CORRIDORS AND ELECTRIC STRIKES AT EXTERIOR DOORS. PROVIDE MOTION SENSORS TO RELEASE LOCKS TO EGRESS THE CONTROLLED AREAS. PROVIDE INTERFACE FROM NEW LOCAL DOOR CONTROL PANEL IN ELECTRICAL ROOM 124 TO EXISTING MASTER STATION IN POLICE STATION BUILDING 202 VIA TCP/IP DATA NETWORK. CONTRACTOR SHALL PROVIDE ALL CONTROL PANELS AND ENCLOSURES. ALL CONTROL PANELS SHALL BE LOCKABLE AND KEYED TO MATCH EXISTING CAMPUS SYSTEM SECURITY ENCLOSURES. KEYS SHALL BE DELIVERED TO THE COTR AT PROJECT CLOSEOUT SEE DETAILS. ACCESS CONTROLLER SHALL MEET OR EXCEED FEATURES AND SPECIFICATIONS OF ANDOVER CONTINUUM ACX SERIES.
12. PROVIDE A DATA PORT OUTLET ABOVE THE CEILING TILE FOR OWNER PROVIDED WIRELESS ACCESS POINT. COORDINATE LOCATION WITH OWNER, EQUIPMENT POWER CORD LENGTH, AND TELEMETRY CONSIDERATIONS. SEE TYPICAL 2 PORT WALL OUTLET DETAIL. PROVIDE, TERMINATE, TEST AND CERTIFY 2 RUNS OF CAT6 DATACOM CABLE FROM OUTLET TO PATCH PANELS IN DATA ROOM. TERMINATE CABLES PER TIA/EIA-568-A STANDARD.
13. PROVIDE AND INSTALL 4 CABLE PATHWAY FIRE STOP DEVICES (ONE GROUP OF FOUR) TO PROVIDE A CABLE ROUTE THROUGH THE RATED WALL – SPECIFIED TECHNOLOGIES, INC. "EZ-PATH" SERIES 44 WITH FOUR GANG MOUNTING PLATE AND POSITIONING CLAMPS OR APPROVED EQUAL. REFER TO BUILDING SECTION AND ATTIC PLAN.
14. ROUTE CAMERA CABLES BACK TO EXISTING CONTROLLER IN BUILDING 203/204 2ND FLOOR DATA ROOM.
15. MONITORS SHALL DISPLAY MAXIMUM OF FOUR CAMERA FIELDS OF VIEW. COORDINATE FINAL LOCATION OF MONITORS WITH VA SECURITY STAFF.
16. PROVIDE CONTROLS TO MONITOR THE ENTRANCE AND EXIT THROUGH THIS DOOR.

MAI Project Number: 13-1130
MARQUESS & ASSOCIATES INC
P: 541-772-7115
F: 541-779-4079
1120 East Jackson
PO Box 490
Medford, OR, 97501

REVISIONS	DATE

REGISTERED PROFESSIONAL ENGINEER 74818PE OREGON MARCH 8, 2005 WILLIAM D. LOMICA
RENEWS: DECEMBER 31, 2014

kistler+small+white architects

RAYMOND KISTLER, ARCHITECT
552 A STREET
ASHLAND, OREGON 97520
P: 541-488-8200
F: 541-552-9512
www.kistlersmallwhite.com

DEPARTMENT OF VETERANS AFFAIRS

SOUTHERN OREGON REHABILITATION CENTER & CLINICS

8495 CRATER LAKE HIGHWAY
WHITE CITY, OREGON

DRAWING TITLE:

ELECTRICAL SPECIAL SYSTEMS PLAN
SECOND FLOOR

FULLY SPRINKLERED FACILITY

PROJECT TITLE
REPLACE DOM BLDG. 203

DRAWN BY:	DATE:	DRAWING NO.:
MJL	4 AUGUST 2014	E6.3
CHECK BY:	VA PROJECT NO.:	DWG.25 OF 27
WDL	692-339	

US DEPARTMENT OF VETERANS AFFAIRS

Aug 26, 2014 - 9:57am

S:\13-1130_elect\E6.x.dwg

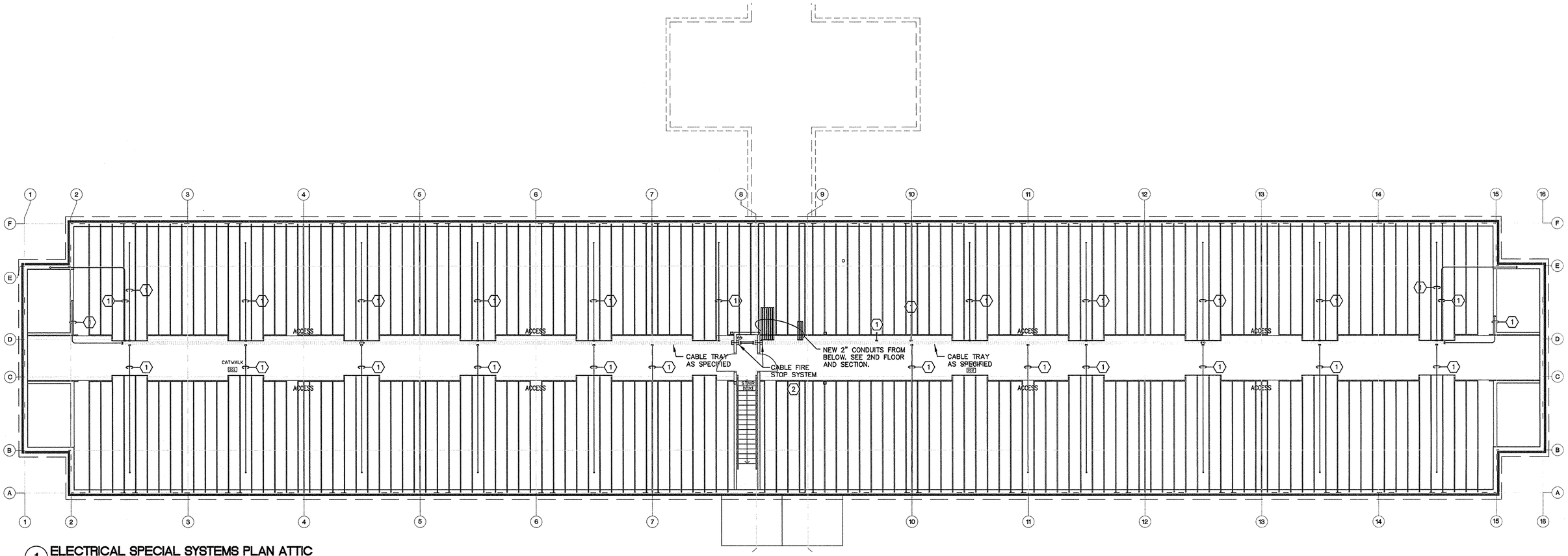

1 ELECTRICAL SPECIAL SYSTEMS PLAN ATTIC

SCALE: 1/8" = 1'-0"

0 4' 8' 16'

GENERAL NOTES:

A. SOME CIRCUITS ARE SHOWN AS SINGLE CIRCUIT HOME RUNS FOR CLARITY PURPOSES. CIRCUITS MAY BE COMBINED IN HOME RUNS AS APPROPRIATE AND AS ALLOWED BY CODE (MAX. THREE CIRCUITS PER CONDUIT). UNLESS OTHERWISE NOTED, CIRCUITS CONNECTED TO 20 AMP, SINGLE POLE CIRCUIT BREAKERS SHALL BE CONNECTED WITH TWO #12CU & ONE #12CU GROUND IN 1/2" CONDUIT.

B. INDEX AND NUMBER ALL DATACOM OUTLETS AND CABLES PER V.A. STANDARD.

C. VOICE/DATA CABLING IN ACCESSIBLE CRAWL OR ATTIC SPACES TO BE RUN IN "J"-HOOKS. CABLING IN WALLS, SLABS, OR AREAS OF LIMITED ACCESS SHALL BE IN CONDUIT. ONLY DATACOM CABLING SHALL BE ROUTED IN CABLE TRAY.

KEYED NOTES

1. TYPICAL CONDUIT ROUTE FROM DATA WALL OUTLETS TO CABLE TRAY IN ATTIC. MINIMUM BEND RADIUS SHALL BE 6". REFER TO SECTION. LABEL EACH CONDUIT AT STUB OUT WITH ROOM NUMBER PER V.A. NAMING CONVENTION. PROVIDE SUPPORT AND CABLE MANAGEMENT DEVICES FOR CABLE BETWEEN CONDUIT STUBS AND CABLE TRAY.

2. PROVIDE AND INSTALL CABLE PATHWAY FIRE STOP DEVICES AT ALL ACCESSIBLE OPEN CABLE PENETRATIONS OF RATED CONSTRUCTION – SPECIFIED TECHNOLOGIES, INC. "EZ-PATH" SERIES 44 OR APPROVED EQUAL. PROVIDE QUANTITIES TO ACCOMODATE CABLE DESIGN CAPACITY AND 20% SPARE MINIMUM.

MAI Project Number: 13-1130
MARQUESS & ASSOCIATES INC
P: 541-772-7115
F: 541-779-4079
1120 East Jackson
PO Box 490
Medford, OR, 97501

REVISIONS	DATE

REGISTERED PROFESSIONAL ENGINEER 74818PE OREGON JANUARY 9, 2008 WILLIAM D. LOMICA
RENEWAL DATE: 12-31-2014

kistler+small+white architects
RAYMOND KISTLER, ARCHITECT
552 A STREET
ASHLAND, OREGON 97520
P: 541-488-8200
F: 541-552-9512
www.kistlersmallwhite.com

DEPARTMENT OF VETERANS AFFAIRS

SOUTHERN OREGON REHABILITATION CENTER & CLINICS

8495 CRATER LAKE HIGHWAY
WHITE CITY, OREGON

DRAWING TITLE:

ELECTRICAL SPECIAL SYSTEMS PLAN
ATTIC

FULLY SPRINKLERED FACILITY

PROJECT TITLE
REPLACE DOM BLDG. 203

DRAWN BY:	DATE:	DRAWING NO.:
MJL	4 AUGUST 2014	E6.4
CHECK BY: WDL	VA PROJECT NO.: 692-339	DWG.26 OF 27

US DEPARTMENT OF VETERANS AFFAIRS

C:\Users\V450w8\appdata\local\temp\AcPublish_2172\E6.x.dwg
Jul 30, 2014 - 2:24pm

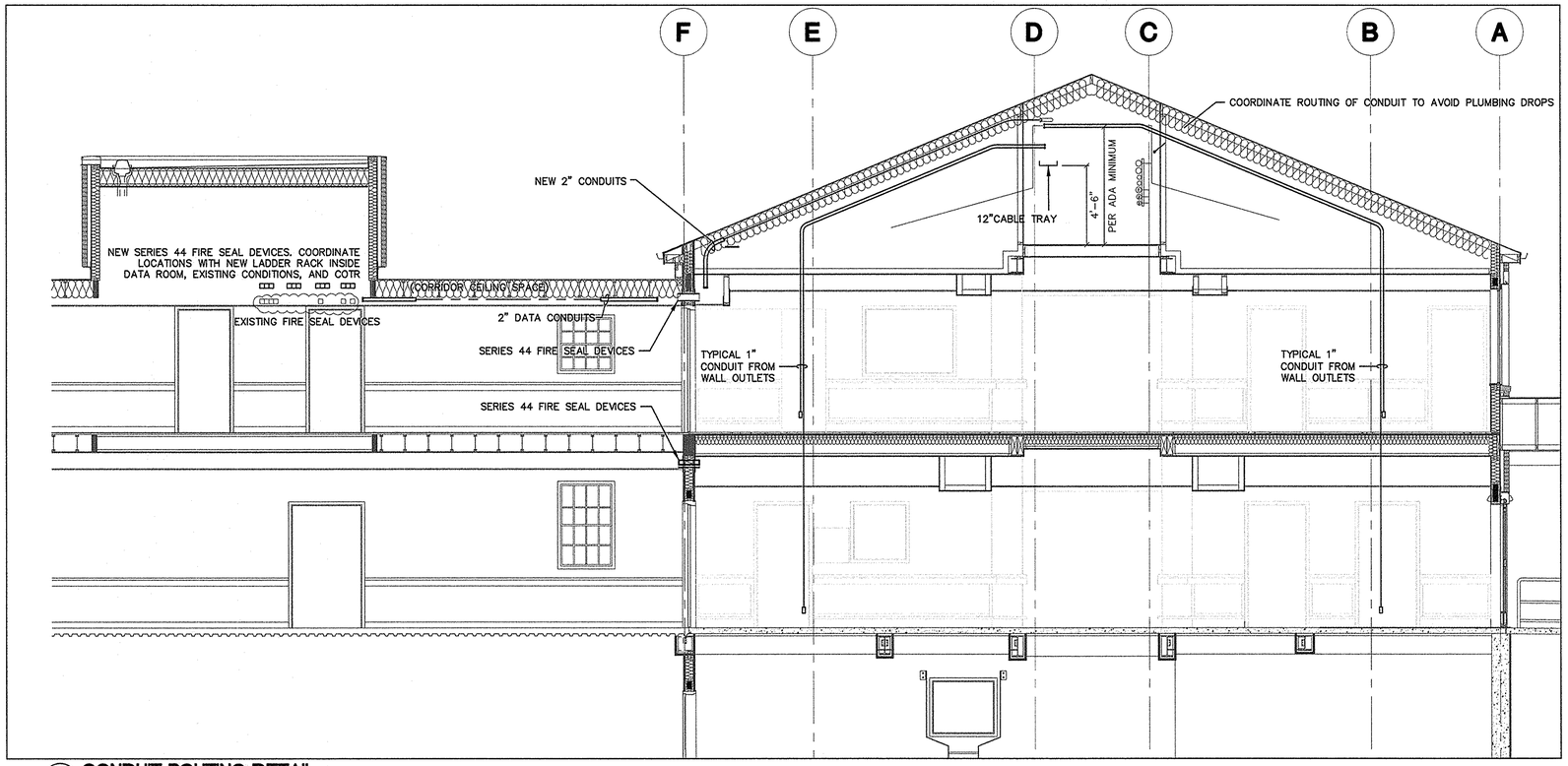

1 CONDUIT ROUTING DETAIL

SCALE: 1/4" = 1'-0"

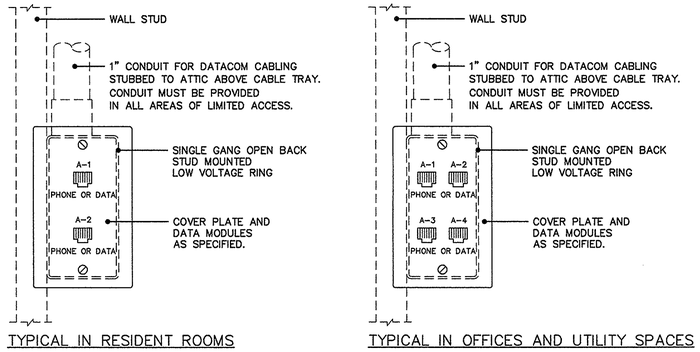

TYPICAL IN RESIDENT ROOMS

TYPICAL IN OFFICES AND UTILITY SPACES

2 TYPICAL DATACOM WALL OUTLETS

SCALE: NONE

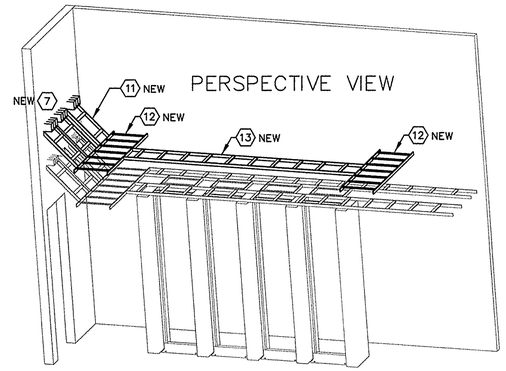

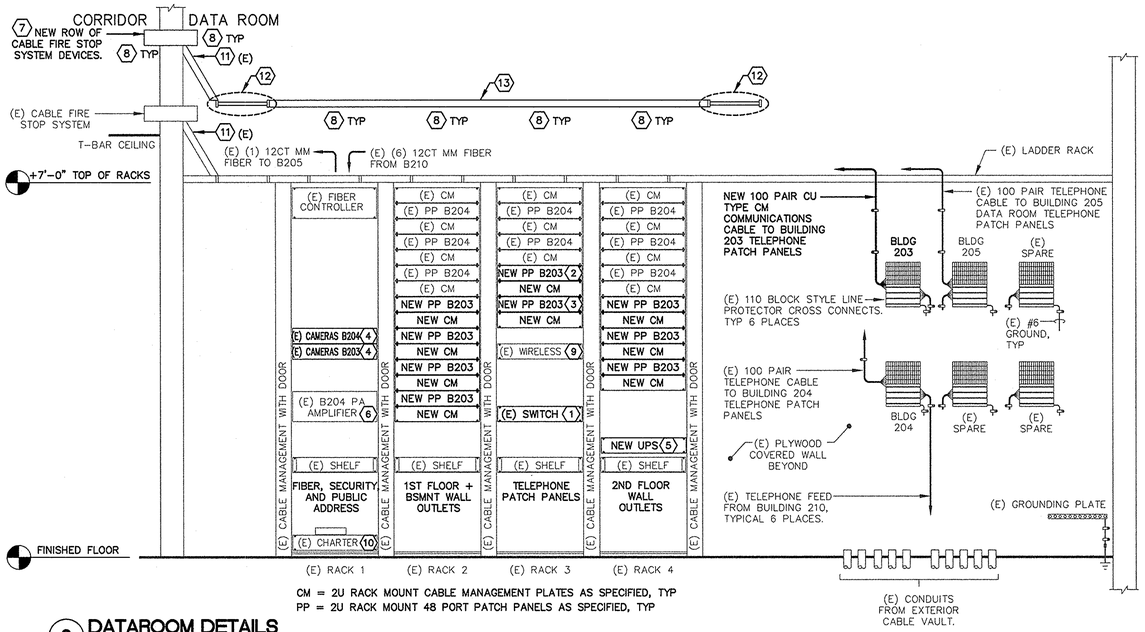

CM = 2U RACK MOUNT CABLE MANAGEMENT PLATES AS SPECIFIED, TYP
PP = 2U RACK MOUNT 48 PORT PATCH PANELS AS SPECIFIED, TYP

3 DATAROOM DETAILS

SCALE: NONE

DATAROOM KEYED NOTES

1. (E) CISCO WIRELESS ACCESS SWITCH TO BE RELOCATED FROM RACK 4. RELOCATION BY VA.
2. NEW 48 PORT PATCH PANEL FOR B203. PHONE FEED TO BLDG 203 – TERMINATE PAIR 1–48, PAIRS 49 & 50 DEAD.
3. NEW 48 PORT PATCH PANEL FOR B203. PHONE FEED TO BLDG 203 – TERMINATE PAIR 51–98, PAIRS 99 & 100 DEAD.
4. RELOCATE AND RE-TERMINATE (E) SECURITY CAMERA SYSTEM CONTROLLERS FROM RACK 2 (COMNET FOR B204 AND COMNET FOR B203).
5. NEW 2U RACK MOUNT 1400 WATT UL508 COMPLIANT UPS AS SPECIFIED.
6. (E) 500W PUBLIC ADDRESS AMPLIFIER FOR BUILDING 204. CONNECT NEW BUILDING 203 SPEAKERS TO AMPLIFIER VIA WALL MOUNTED SCREW STYLE TERMINAL STRIPS ON EAST WALL AT LOCATION OF EXISTING TERMINAL STRIPS.
7. PROVIDE AND INSTALL 12 CABLE PATHWAY FIRE STOP DEVICES ALONG CORRIDOR / DATA ROOM SHARED WALL – SPECIFIED TECHNOLOGIES, INC. "EZ-PATH" SERIES 44 WITH THREE GANG MOUNTING PLATES AND POSITIONING CLAMPS OR APPROVED EQUAL. SEE DATA ROOM DETAIL.
8. PROVIDE CABLE WATERFALL STYLE SUPPORT DEVICES AT ALL CABLE ELEVATION CHANGES.
9. (E) WIRELESS ACCESS PANEL.
10. (E) CHARTER DIGITAL SWITCH AND MODEM (SITTING ON TOP).
11. 18" WIDE LADDER RACKS INSTALLED AS CABLE WATERFALL DEVICES. SEISMIC MOUNTING REQUIREMENTS AS SPECIFIED.
12. NEW 18" WIDE LADDER RACK FROM EAST WALL TO WEST WALL. SEE DETAILS. SEISMIC MOUNTING REQUIREMENTS AS SPECIFIED.
13. NEW 18" WIDE LADDER RACK. CENTER OVER EXISTING FLOOR RACKS BELOW. SEISMIC MOUNTING REQUIREMENTS AS SPECIFIED.

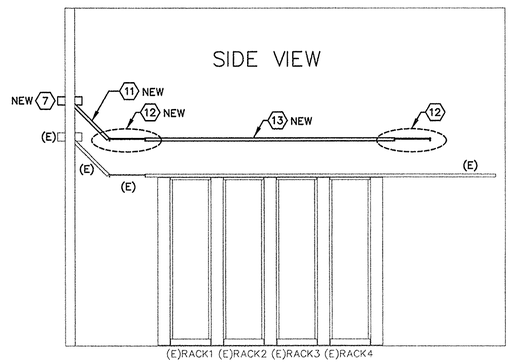

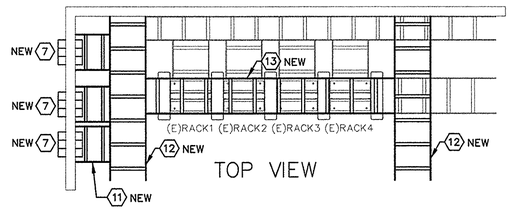

MAI Project Number: 13-1130
P: 541-772-7115
F: 541-779-4079
MARQUESS & ASSOCIATES INC
1120 East Jackson
PO Box 490
Medford, OR, 97501

REVISIONS	DATE

REGISTERED PROFESSIONAL ENGINEER 74818PE OREGON MARCH 6, 2008 WILLIAM D. LOMICA
RENEWAL DATE: 12-31-20/12

kistler+small+white architects
RAYMOND KISTLER, ARCHITECT
552 A STREET
ASHLAND, OREGON 97520
P: 541-488-8200
F: 541-552-9512
www.kistlersmallwhite.com

DEPARTMENT OF VETERANS AFFAIRS
SOUTHERN OREGON REHABILITATION CENTER & CLINICS
8495 CRATER LAKE HIGHWAY
WHITE CITY, OREGON

DRAWING TITLE:
ELECTRICAL SPECIAL SYSTEMS DETAILS

FULLY SPRINKLERED FACILITY

PROJECT TITLE
REPLACE DOM BLDG. 203

DRAWN BY:	DATE:	DRAWING NO.:
MJL	4 AUGUST 2014	E6.5
CHECK BY: WDL	VA PROJECT NO.: 692-339	DWG 27 OF 27

US DEPARTMENT OF VETERANS AFFAIRS

C:\Users\kSbell\appdata\local\temp\AcPublish_2172\E6.4.dwg
Jul 30, 2014 - 2:24pm