GENERAL NOTES

1. ALL WORK SHALL BE IN ACCORDANCE WITH THE BUILDING AND PLUMBING CODES AS WELL AS LOCAL AUTHORITIES HAVING JURISDICTION.
2. THE SPRINKLER CONTRACTOR SHALL BE REQUIRED TO OBTAIN AND CARRY THE COST ASSOCIATED WITH THE PERMIT PROCESS AND RELATED, CITY REQUIRED INSPECTIONS.
3. REFER TO ARCHITECTURAL DRAWINGS AND ELEVATIONS, CEILING HEIGHTS AND REFLECTED CEILING PLANS FOR OTHER TRADE CEILING DEVICE LOCATIONS. SPRINKLER HEAD LAYOUT WITHIN THESE CONTRACT DOCUMENTS SUPERCEDE ANY LAYOUT SHOWN ON ARCHITECTURAL PLANS.
4. REFER TO THE ARCHITECTURAL DRAWINGS FOR THE CEILING HEIGHTS WHICH SHALL BE MAINTAINED.
5. INVESTIGATE AVAILABLE SPACE FOR ALL PIPING AND EQUIPMENT IN CEILINGS BEFORE SUBMISSION OF SHOP DRAWINGS.
6. TEMPORARY PIPING REQUIRED FOR PHASING OR SUPPORTING EXISTING SERVICES OR OCCUPANCY FUNCTIONS SHALL BE PROVIDED AT NO ADDITIONAL COST TO THE OWNER.
7. ANY SYSTEMS OR AREAS AFFECTED OUTSIDE THE RENOVATED AREA WHICH IS TO REMAIN SHALL BE RE–FED FOR A COMPLETE AND OPERATIONAL SYSTEM.
8. THE PIPING SYSTEMS SHOWN ON THE DRAWINGS ARE SHOWN DIAGRAMMATICALLY WITHOUT EVERY OFFSET AND TRANSITION REQUIRED TO INSTALL THE WORK. OBVIOUS OFFSETS AND TRANSITIONS, AS RELATED TO PLUMBING ARE SHOWN WHERE POSSIBLE WITHOUT AFFECTING THE CLARITY OF THE DRAWINGS.
9. ALL MATERIALS INSTALLED IN THIS SCOPE OF WORK SHALL BE NEW UNLESS SPECIFICALLY NOTED FOR RE–USE.

DEMOLITION NOTES

1. THE BEST ATTEMPT WAS MADE TO INDICATE EXISTING EQUIPMENT, FIXTURES, ETC. TO BE REMOVED. THE SPRINKLER CONTRACTOR SHALL BE RESPONSIBLE FOR DISCONNECTION AND REMOVAL OF ALL FIRE PROTECTION ITEMS WITHIN THE RENOVATED AREA AND SHALL BE RESPONSIBLE FOR FIELD REVIEW PRIOR TO DISCONNECTION.
2. ALL EXISTING SPRINKLER HEADS AND BRANCH PIPING WITHIN THE SCOPE OF WORK AREAS WITH CEILINGS BEING REMOVED ARE TO BE DEMOLISHED AND REPLACED WITH NEW UNLESS OTHERWISE NOTED.
3. REMOVAL WORK SHALL INCLUDE ALL HANGERS OF PIPING SYSTEMS OR ABANDONED EQUIPMENT AND RELATED APPURTENANCES.
4. THE SPRINKLER CONTRACTOR SHALL VISIT THE SITE PRIOR TO SUBMITTING HIS BID SO THAT ALL AREAS WHERE REMOVAL WORK IS SHOWN OR NOTED ON THE DRAWINGS CAN BE INSPECTED. NO EXTRAS WILL BE ACCEPTED FOR ANY REMOVAL WORK AFTER BID IS SUBMITTED.

NEW WORK NOTES

1. ALL PIPING TO BE INSTALLED STRAIGHT AND TRUE IN RELATION TO EACH OTHER. PROPER CLEARANCES AND ACCESS TO VALVES TO BE MAINTAINED.
2. ALL SPRINKLER PIPING NETWORKS SHALL PITCH BACK TOWARDS SOURCE WHEN POSSIBLE FOR FULL DRAINAGE OF THE SYSTEM. WHEN NOT POSSIBLE, LOW POINT DRAINS ARE TO BE PROVIDED FOR MANUAL DRAINAGE OF TRAPPED SECTIONS OF PIPING.
3. FIRE PROTECTION PIPING AND EQUIPMENT SHALL NOT BE SUPPORTED FROM OTHER TRADES. FIRE PROTECTION PIPING CAN BE RACKED TOGETHER BUT SHOULD BE INDEPENDENT FROM OTHER TRADES.
4. SPRINKLER CONTRACTOR SHALL SEAL PIPING PENETRATIONS THROUGH FIRE AND SMOKE RATED PARTITIONS WITH APPROVED FIRE STOP MATERIAL.
5. ALL WORK IN THIS SECTION SHALL BE COORDINATED WITH ALL OTHER TRADES PRIOR TO BEGINNING INSTALLATION.
6. SPRINKLER BRANCH PIPE AND MAIN SIZING TO BE CONFIRMED THROUGH A WATER FLOW TEST AND HYDRAULIC CALCULATIONS. FLOW TEST DATA OBTAINED MUST HAVE BEEN CONDUCTED WITHIN THE PAST YEAR, ELSE A NEW TEST MUST BE PERFORMED.
7. SPRINKLER CONTRACTOR SHALL FIELD VERIFY EXISTING PIPE CONNECTION POINT SIZES PRIOR TO INSTALLATION OF PIPING MAINS.
8. ALL NEW PIPING SHALL RUN ABOVE CEILINGS AND BEHIND FINISHED SURFACES UNLESS OTHERWISE NOTED.
9. THE SPRINKLER CONTRACTOR SHALL OBTAIN INSTALLATION INSTRUCTION ON EACH PIECE OF EQUIPMENT TO BE FURNISHED WHICH THE CONTRACTOR IS REQUIRED TO INSTALL OR TO WHICH FINAL CONNECTIONS ARE TO BE MADE UNDER THE SPRINKLER CONTRACT. THE SPRINKLER CONTRACTOR SHALL INSTALL AND MAKE FINAL CONNECTIONS PER THE MANUFACTURER'S INSTRUCTION AND RECOMMENDATIONS. THE CONTRACTOR SHALL DEMONSTRATE TO THE OWNER THAT THE INSTALLED EQUIPMENT OPERATES AS DESIGNED.
10. ALL FIRE PROTECTION PIPING AND EQUIPMENT SHALL BE INSTALLED, COORDINATED WITH ALL TRADES, IN SUCH A WAY SO THAT LIGHTS, CONDUITS, SUPPLY AND/OR DRAIN PIPING AND HVAC EQUIPMENT AND ACCESS PANELS ARE NOT OBSTRUCTED.
11. SPRINKLER HEADS SHALL NOT BE PLACED CLOSER THAN 6'–0" ON CENTER WITHOUT A BAFFLE BETWEEN SPRINKLER HEADS. BAFFLES SHOULD BE AVOIDED WHENEVER POSSIBLE AND IF REQUIRED, PRIOR NOTIFICATION AND APPROVAL BY ENGINEER IS REQUIRED.
12. SPRINKLER HEADS INSTALLED IN ACT CEILING TO BE CENTER OF TILE. IN 4'X2' CEILING TILE, HEAD CAN BE CENTERED IN 2'X2' SECTION OF TILE.
13. EXISTING SPRINKLER HEADS BEING REMOVED SHALL NOT BE RE–USED IN NEW LOCATION. PROVIDE NEW SPRINKLER HEAD IN NEW LOCATION.
14. WITHIN A PARTICULAR SPACE, SPRINKLER HEAD TEMPERATURE RATINGS MUST BE CONSISTENT. TEMPERATURE RATINGS OF NEW SPRINKLER HEADS TO MATCH EXISTING SPRINKLER HEADS TO REMAIN IN THE SAME SPACE.

SPRINKLER DESIGN CRITERIA SCHEDULE

LOCATION			DESIGN CRITERIA				SPRINKLER INFORMATION					REMARKS
AREA DESIGNATION	FLOOR LEVEL	OCCUPANCY	HAZARD	DENSITY (GPM/FT^3)	AREA (FT^2)	MAXIMUM SPACING	SYSTEM TYPE	SPRINKLER TYPE	TEMPERATURE RATING	LINK TYPE	ORIFICE SIZE	
LH 1.1	GENERAL	COMMON AREAS PATIENT, STAFF, SUPPORT AREAS	LIGHT	0.1	1500	15' x 15'	AUTOMATIC WET	RECESSED UPRIGHT	155	GLASS BULB	1/2"	SPRINKLER HEADS TO BE INSTALLED IN CENTER OF TILE IN AREAS WITH TILE CEILINGS
LH 1.2	GENERAL	STAIRS	LIGHT	0.1	1500	15' x 15'	AUTOMATIC WET	UPRIGHT	155	GLASS BULB	1/2"	
OH 1.1	GENERAL	TEL DATA CLOSET	ORDINARY GROUP 1	0.15	1500	10' x 12'	AUTOMATIC WET	UPRIGHT	155	GLASS BULB	1/2"	
OH 1.2	GENERAL	ELECTRICAL CLOSETS	ORDINARY GROUP 1	0.15	1500	10' x 12'	AUTOMATIC WET	UPRIGHT	155	GLASS BULB	1/2"	
OH 1.3	GENERAL	CYLINDER STORAGE	ORDINARY GROUP 2	0.2	1500	10' x 12'	AUTOMATIC DRY	SEMI–RECESSED	155	GLASS BULB	1/2"	
NH 1.1	GENERAL	SHAFTS	NO HAZARD	––	––	––	SMOKE ONLY	––	––	––	––	NO SPRINKLER HEAD TO BE PROVIDED

FIRE PROTECTION LEGEND

GENERAL

		EXISTING PIPING TO BE REMOVED
		HEAVY LINE INDICATES NEW WORK
		LIGHT LINE INDICATES EXISTING WORK
		PIPING INTERRUPTED OR TO BE CONTINUED
		CAP OR END OF PIPE
	CTE	CONNECT TO EXISTING
DETAIL # / DRAWING #	1 / P7.1	DETAIL DESIGNATION TAG
	DN	ELBOW DOWN OR DROP
	UP	ELBOW UP OR RISE
		FLOW IN DIRECTION OF ARROW
		HEAT TRACE
		TEE LOOKING DOWN
		TEE LOOKING UP
		WATER TIGHT SLEEVE

DEVICES

#	KEYNOTE TAG
#	HYDRAULIC REFERENCE NODE

SIGNALING DEVICES

FM		FLOW METER
FS	FS	FLOW SWITCH
		PRESSURE GAUGE
TS	TS	TAMPER SWITCH

SPRINKLERS

CONCEALED SPRINKLER HEAD
EXISTING SPRINKLER TO REMAIN
EXISTING SPRINKLER TO BE REMOVED
PENDENT SPRINKLER
SEMI–RECESSED SPRINKLER
SIDEWALL SPRINKLER
UPRIGHT SPRINKLER
UPRIGHT SPRINKLER W/CAGE

SYSTEMS

F		BURIED FIRE SERVICE
F		FIRE SERVICE, MAIN DISTRIBUTION AND/OR STANDPIPE FEED
FDC		FIRE DEPARTMENT INLET CONNECTION
SP		WET SPRINKLER
SPD	SPD	SPRINKLER DRAIN

VALVES

BV	BALL VALVE
CV	CHECK VALVE
GV	GATE VALVE
FDV	FIRE DEPARTMENT VALVE
FHC	FIRE HOSE CABINET
FCVA	FLOOR CONTROL VALVE ASSEMBLY
OS&Y	SUPERVISED OUTSIDE SCREW & YOLK VALVE
VIV	VALVE IN VERTICAL

ABBREVIATIONS

AFF	ABOVE FINISH FLOOR
AFG	ABOVE FINISH GRADE
AP	ACCESS PANEL
AC	ABOVE CEILING
ARCH	ARCHITECT
BLDG	BUILDING
BOP	BOTTOM OF PIPE
BOR	BOTTOM OF RISER
CLNG	CEILING
CLDI	CEMENT LINED DUCTILE IRON
CP	CHROME PLATED
CNR	CONCENTRIC REDUCER
CONT	CONTINUATION
DIA	DIAMETER
DWG	DRAWING
EA	EACH
ECC	ECCENTRIC REDUCER
EL OR ELEV.	ELEVATION
ELEC	ELECTRIC
EMER	EMERGENCY
ETBR	EXISTING TO BE REMOVED
ETR	EXISTING TO REMAIN
FFE	FINISH FLOOR ELEVATION
FLR	FLOOR
FT	FOOT
FURN	FURNISHED
GALV	GALVANIZED
GC	GENERAL CONTRACTOR
GPH	GALLONS PER HOUR
GPM	GALLONS PER MINUTE
GWB	GYPSUM WALL BOARD
HMR	HYDRAULICALLY MOST REMOTE
INV	INVERT
JP	JOCKEY PUMP
KW	KILOWATTS
MAX	MAXIMUM
MECH	MECHANICAL
MIN	MINIMUM
MISC	MISCELLANEOUS
N/A	NOT APPLICABLE
NC	NORMALLY CLOSED
NO	NORMALLY OPEN
NTS	NOT TO SCALE
NIC	NOT IN CONTRACT
PA	PRE–ACTION
PIV	POST INDICATING VALVE
POS	PROVIDED UNER OTHER SECTION
SCH	SCHEDULE
SF	SQUARE FEET
SPEC	SPECIFICATION
ST. ST.	STAINLESS STEEL
STD	STANDARD
STL	STEEL
TH	TEST HEADER
TOR	TOP OF RISER
TOS	TOP OF STAIRS
TYP	TYPICAL
UNO	UNLESS NOTED OTHERWISE
VIV	VALVE IN VERTICAL
W/	WITH
W/O	WITHOUT

* NOT ALL SYMBOLS MAY BE APPLICABLE TO THIS PROJECT

SEAN J. BRICE
No. 10056
REGISTERED PROFESSIONAL ENGINEER MECHANICAL

ISSUED FOR CONSTRUCTION DOCUMENTS
FULLY SPRINKLERED

Number	Date	Revision

CONSULTANTS

CIVIL
PARE Corporation
8 Blackstone Valley Place
Lincoln, RI 02865
T: 401.334.4100
www.parecorp.com

STRUCTURAL
Simpson Gumphertz & Heger
41 Seyon Street
Waltham, MA 02453
T: 781.907.9000
www.sgh.com

MEP / FP
Thompson Consulting, Inc.
525 Mill Street
Marion, MA 02738
T: 508.748.2620
www.thompson-consultants.com

COST
D.G. Jones
3 Baldwin Green Common
Suite 202
Woburn, MA 01801
T: 781.932.3131
www.djjonesboston.com

ARCHITECT
morris switzer environments for health
11 Drydock Ave, Suite 2060
Boston, MA 02210
T: 617.772.0260
F: 617.772.0261
www.morrisswitzer.com

KEY PLAN

N

Drawing Title: FIRE PROTECTION LEGEND

Drawn By:

Checked By:

Approved By:

Project Title: REPLACE / RELOCATE DEFICIENT ICU

Building #: 1

Scale: NTS

Location: PROVIDENCE, RI

Date: 02/27/15

VA Project No.: 650-324

Drawing No.: FP0.1

Office of Facilities

Department of Veterans Affairs

VA FORM 08-6231

DATE & TIME PRINTED: 9/15/2015 11:09:00 AM

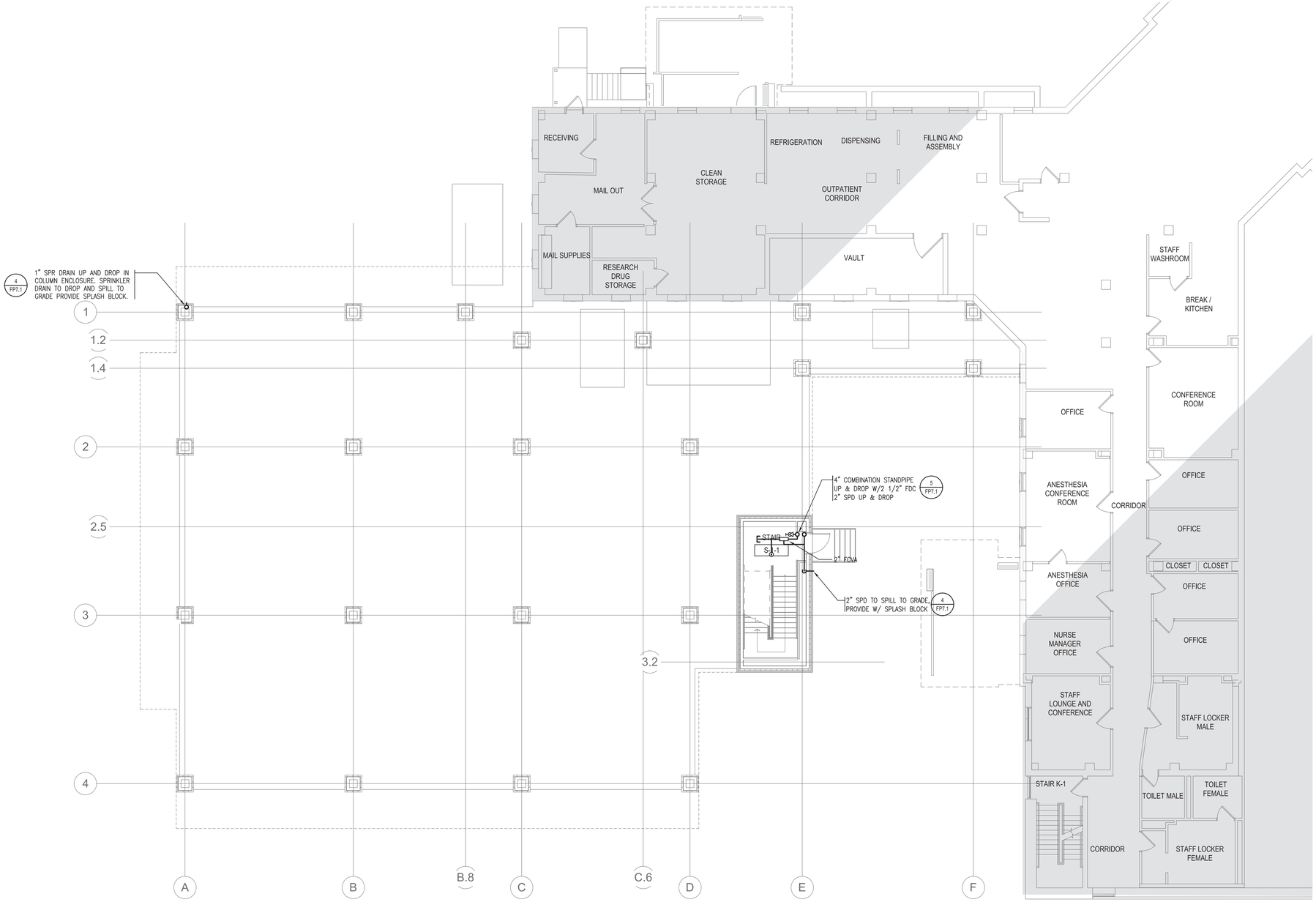

SEAN J. BRICE
No. 10056
REGISTERED PROFESSIONAL ENGINEER MECHANICAL

ISSUED FOR CONSTRUCTION DOCUMENTS
FULLY SPRINKLERED

Number	Date	Revision

CONSULTANTS

CIVIL
PARE Corporation
8 Blackstone Valley Place
Lincoln, RI 02865

T: 401.334.4100
www.parecorp.com

STRUCTURAL
Simpson Gumphertz & Heger
41 Seyon Street
Waltham, MA 02453

T: 781.907.9000
www.sgh.com

MEP / FP
Thompson Consulting, Inc.
525 Mill Street
Marion, MA 02738

T: 508.748.2620
www.thompson-consultants.com

COST
D.G. Jones
3 Baldwin Green Common
Suite 202
Woburn, MA 01801

T: 781.932.3131
www.dgjonesboston.com

ARCHITECT

morrisswitzer
environments for health
11 Drydock Ave, Suite 2060
Boston, MA 02210

T: 617.772.0260
F: 617.772.0261
www.morrisswitzer.com

KEY PLAN

N

Drawing Title
FIRE PROTECTION
FIRST FLOOR
RENOVATION PLAN

Drawn By:

Checked By:

Approved By:

Project Title
REPLACE / RELOCATE
DEFICIENT ICU

Building #
1

Scale
1/4"=1'-0"

Location
PROVIDENCE, RI

Date
02/27/15

VA Project No.
650-324

Drawing No.
FP2.1

Office of Facilities

Department of Veterans Affairs

VA FORM 08-6231

DATE & TIME PRINTED: 8/13/2013 11:20:48 AM

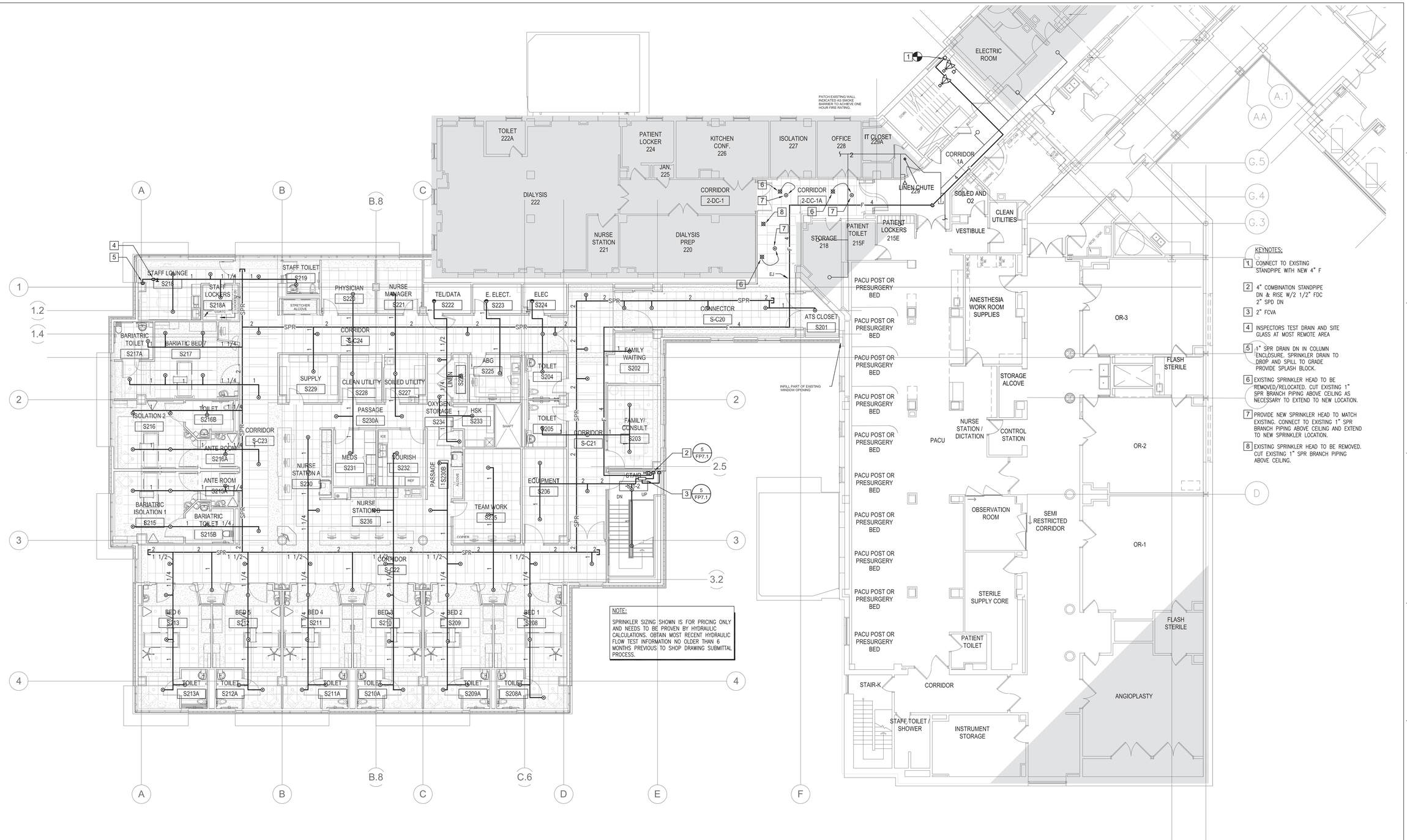

NOTE:

SPRINKLER SIZING SHOWN IS FOR PRICING ONLY AND NEEDS TO BE PROVEN BY HYDRAULIC CALCULATIONS. OBTAIN MOST RECENT HYDRAULIC FLOW TEST INFORMATION NO OLDER THAN 6 MONTHS PREVIOUS TO SHOP DRAWING SUBMITTAL PROCESS.

KEYNOTES:

1. CONNECT TO EXISTING STANDPIPE WITH NEW 4" F
2. 4" COMBINATION STANDPIPE DN & RISE W/2 1/2" FDC 2" SPD DN
3. 2" FCVA
4. INSPECTORS TEST DRAIN AND SITE GLASS AT MOST REMOTE AREA
5. 1" SPR DRAIN DN IN COLUMN ENCLOSURE. SPRINKLER DRAIN TO DROP AND SPILL TO GRADE PROVIDE SPLASH BLOCK.
6. EXISTING SPRINKLER HEAD TO BE REMOVED/RELOCATED. CUT EXISTING 1" SPR BRANCH PIPING ABOVE CEILING AS NECESSARY TO EXTEND TO NEW LOCATION.
7. PROVIDE NEW SPRINKLER HEAD TO MATCH EXISTING. CONNECT TO EXISTING 1" SPR BRANCH PIPING ABOVE CEILING AND EXTEND TO NEW SPRINKLER LOCATION.
8. EXISTING SPRINKLER HEAD TO BE REMOVED. CUT EXISTING 1" SPR BRANCH PIPING ABOVE CEILING.

SEAN J. BRICE
No. 10056
REGISTERED PROFESSIONAL ENGINEER MECHANICAL

ISSUED FOR CONSTRUCTION DOCUMENTS
FULLY SPRINKLERED

Number	Date	Revision

CONSULTANTS

CIVIL
PARE Corporation
8 Blackstone Valley Place
Lincoln, RI 02865
T: 401.334.4100
www.parecorp.com

STRUCTURAL
Simpson Gumphertz & Heger
41 Seyon Street
Waltham, MA 02453
T: 781.907.9000
www.sgh.com

MEP / FP
Thompson Consulting, Inc.
525 Mill Street
Marion, MA 02738
T: 508.748.2620
www.thompson-consultants.com

COST
D.G. Jones
3 Baldwin Green Common
Suite 202
Woburn, MA 01801
T: 781.932.3131
www.dgjonesboston.com

ARCHITECT

morris switzer environments for health
11 Drydock Ave, Suite 2060
Boston, MA 02210
T: 617.772.0260
F: 617.772.0261
www.morrisswitzer.com

KEY PLAN

N

Drawing Title
FIRE PROTECTION
SECOND FLOOR
RENOVATION PLAN

Drawn By:
Checked By:
Approved By:

Project Title
REPLACE / RELOCATE
DEFICIENT ICU

Building # 1
Scale 1/8"=1'-0"
Location PROVIDENCE, RI

Date 02/27/15
VA Project No. 650-324
Drawing No. FP2.2

Office of Facilities
Department of Veterans Affairs

VA FORM 08-6231

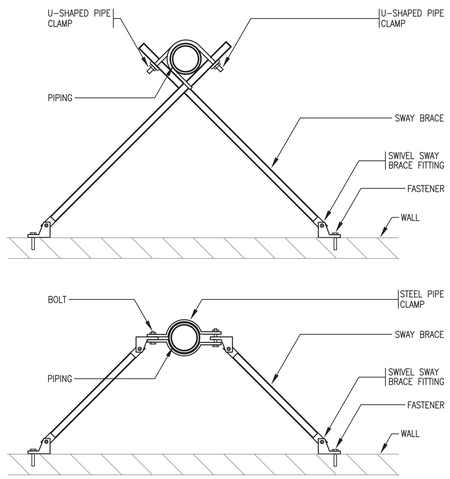

NOTE:
FOR SPACING, BOLT SIZING, ANGLE OF SWAY BRACING, AND SWAY BRACE SHAPE, SIZING, AND MAXIMUM ALLOWABLE LOADS, REFER TO NFPA 13, 1996 EDITION.

1 SEISMIC BRACE CONNECTION RISER — NO SCALE

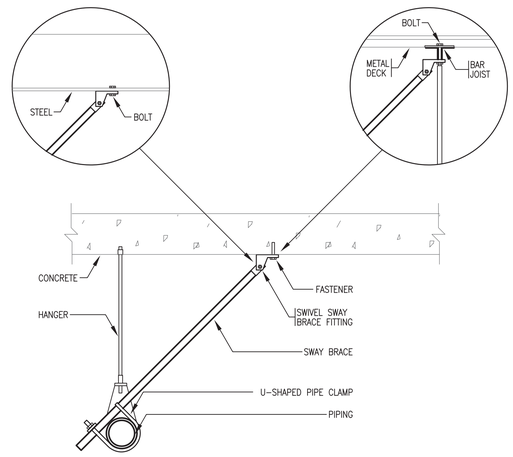

NOTE:
FOR SPACING, BOLT SIZING, ANGLE OF SWAY BRACING, AND SWAY BRACE SHAPE, SIZING, AND MAXIMUM ALLOWABLE LOADS, REFER TO NFPA 13, 1996 EDITION.

2 SEISMIC BRACE CONNECTION (LATERAL) — NO SCALE

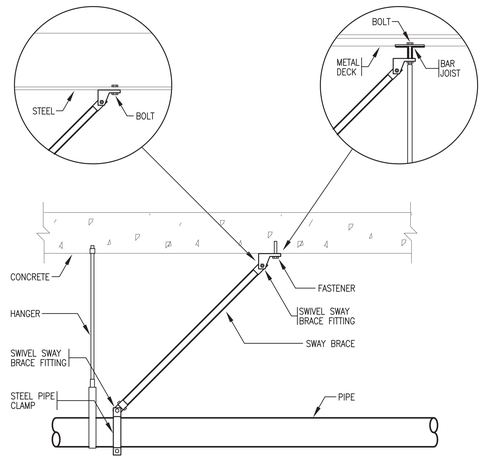

NOTE:
FOR SPACING, BOLT SIZING, ANGLE OF SWAY BRACING, AND SWAY BRACE SHAPE, SIZING, AND MAXIMUM ALLOWABLE LOADS, REFER TO NFPA 13, 1996 EDITION.

3 SEISMIC BRACE CONNECTION (LONGITUDINAL) — NO SCALE

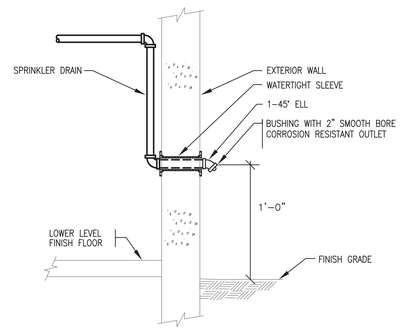

NOTE:
FLOOR CONTROL VALVE ASSEMBLIES THAT ARE LOCATED AT AN ELEVATION BELOW THE DRAIN EXIT OF THE BUILDING, ARE TO BE PIPED UP TO THE SPRINKLER DRAIN OUTLET FOR TESTING, BUT ALSO BE PROVIDED WITH A LOW POINT DRAIN, FOR DRAINING DOWN THE LENGTH OF PIPE THAT IS BELOW THE DRAIN EXIT OF THE BUILDING.

4 SPRINKLER DRAIN TO EXTERIOR — NO SCALE

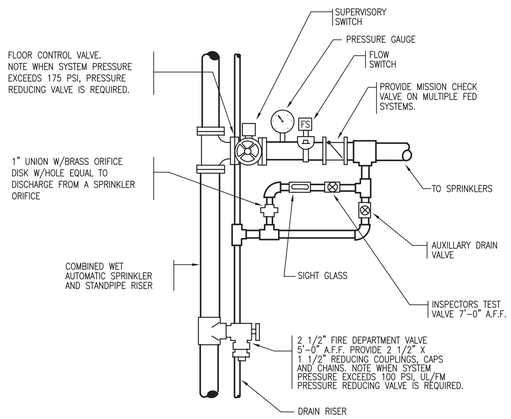

NOTE:
PROVIDE SPARE PARTS KIT FOR EACH DIFFERENT SIZE UNIT INCLUDING GASKETS, SPRINGS, & MAIN ASSEMBLIES

5 COMBINATION STANDPIPE WITH FCVA — NO SCALE

SEAN J. BRICE
No. 10056
REGISTERED PROFESSIONAL ENGINEER MECHANICAL

ISSUED FOR CONSTRUCTION DOCUMENTS
FULLY SPRINKLERED

Number	Date	Revision

CONSULTANTS

CIVIL
PARE Corporation
8 Blackstone Valley Place
Lincoln, RI 02865
T: 401.334.4100
www.parecorp.com

STRUCTURAL
Simpson Gumphertz & Heger
41 Seyon Street
Waltham, MA 02453
T: 781.907.9000
www.sgh.com

MEP / FP
Thompson Consulting, Inc.
525 Mill Street
Marion, MA 02738
T: 508.748.2620
www.thompson-consultants.com

COST
D.G. Jones
3 Baldwin Green Common
Suite 202
Woburn, MA 01801
T: 781.932.3131
www.dgjonesboston.com

ARCHITECT
morrisswitzer
environments for health
11 Drydock Ave, Suite 2060
Boston, MA 02210
T: 617.772.0260
F: 617.772.0261
www.morrisswitzer.com

KEY PLAN

N

Drawing Title: FIRE PROTECTION DETAILS
Drawn By:
Checked By:
Approved By:

Project Title: REPLACE / RELOCATE DEFICIENT ICU
Building #: 1
Scale: NTS
Location: PROVIDENCE, RI

Date: 02/27/15
VA Project No.: 650-324
Drawing No.: FP7.1

Office of Facilities
Department of Veterans Affairs

VA FORM 08-6231