SMOKE PURGE OPERATION TO REMAIN INTACT FOR ALL MODIFIED AHU'S

1. Smoke Cycle Operation
   a. Smoke Cycle Operation for AH1NW-11, AH2NW-19, AH2NW-20, AND AH3NW-27 does not change with work associated with this project. Controls Contractor to finalize sequence and integration into ECC.
   b. When the smoke cycle is initiated either automatically as part of a smoke interlock sequence in the ECC program, or manually by the ECC operator, the unit will operate as shown in the below smoke cycle chart. Smoke dampers are sent into a predetermined position based on the smoke zone in alarm by solenoid air valves to allow them to be opened or closed by an operator at the building automation computer programmed with the damper positions specified in the smoke cycle chart. Low limit thermostat, will be inoperative. The humidifier and cooling coil valves will be closed during the smoke cycle. In smoke mode operation the cooling coil and preheat coil valve will be closed while smoke mode valve will be modulated to maintain a 55F supply fan discharge.
   c. If a zone conditioned by this air handler is in the smoke mode, positive or negative, the building automation system will eliminate the static pressure sensors in this zone from the control selection process and will control the supply fan for the lowest static pressure sensor in the remaining zones not affected by the smoke condition.
   d. Warning: The building automation system has no safety start/stop control of fan system in bypass mode. Use bypass mode with extreme caution as duct damage or freeze conditions may occur.

EQUIPMENT	SMOKE MODE	ADJACENT ZONE
SUPPLY FAN (ahu in alarm)	STOP	RUN (100% VOLUME)
RETURN FAN (ahu in alarm)	RUN(100% VOLUME)	STOP
RETURN AIR DAMPER	CLOSED	CLOSED
OUTDOOR AIR DAMPER	CLOSED	OPEN
RELIEF AIR DAMPER	OPEN	CLOSED
HUMIDIFIER VALVES	CLOSED	CLOSED
COOLING COIL VALVE	CLOSED	CLOSED
F & BP DAMPERS	MODULATE TO MAINTAIN 55F @FAN DISCHARGE	
PREHEAT VALVE	CLOSED	CLOSED
SMOKE MODE VALVE	MODULATE TO MAINTAIN 55F @FAN DISCHARGE	

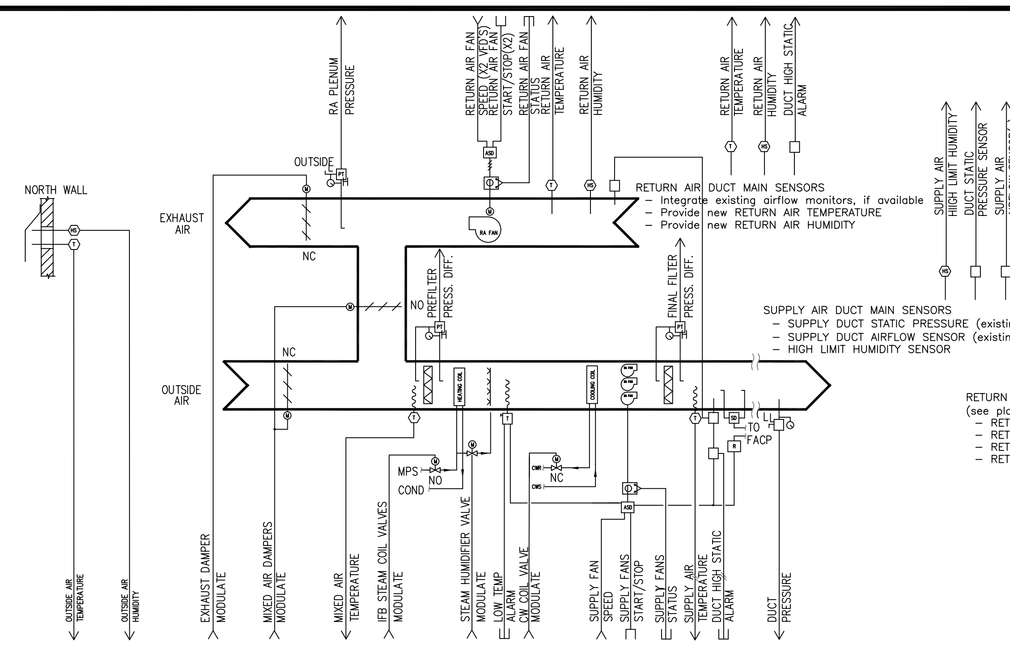

1 CONTROL DIAGRAM FOR AH1NW-11 AND AH3NW-27 (verify new/existing)
NO SCALE

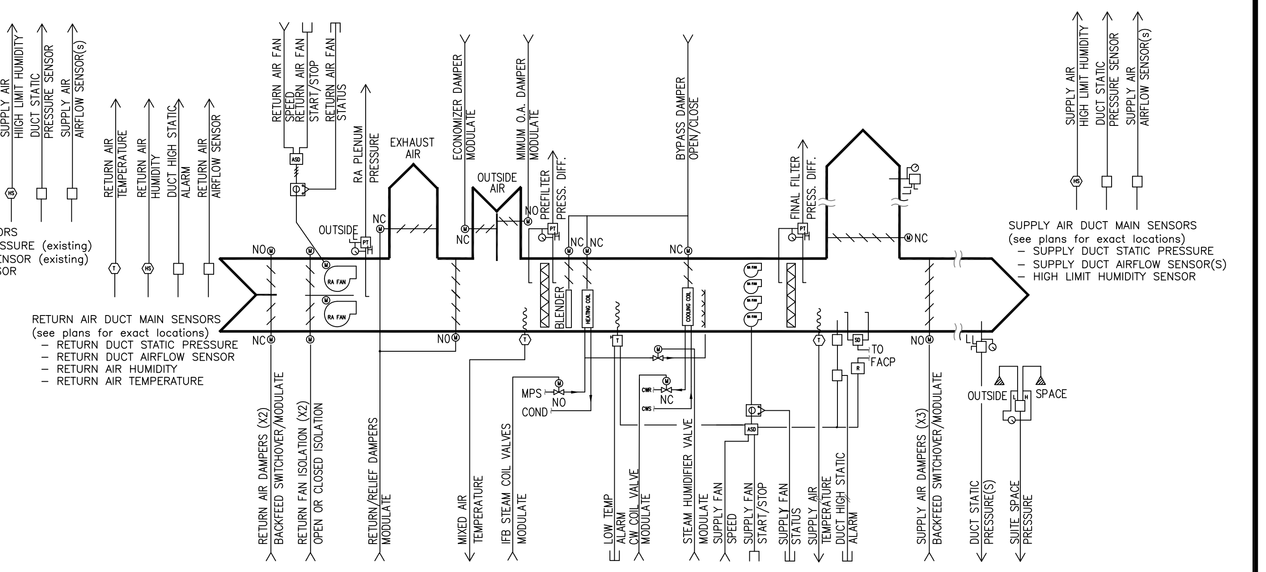

2 CONTROL DIAGRAM FOR AH2NW-19 AND AH2NW-20 (all new)
NO SCALE

SEQUENCES OF OPERATION

1.01 GENERAL

A. Fan & Pump Motor Control:
   1. 1-Phase Motors Start/Stop Control:
      a. With Magnetic Starters: Control relay contacts wired through "AUTO" leg of HAND-OFF-AUTO switch in control circuit of magnetic starter furnished under Division 16 or with equipment.
      b. Without Magnetic Starters: Contactor, control relay, thermostat, manual start/stop station, or other device appropriate for sequence of operation with contacts rated for load to control motor.
   2. 3-Phase Motors:
      a. Constant Speed:
         1) Start/Stop Control: Control relay contacts wired through "AUTO" leg of HAND-OFF-AUTO switch in control circuit of magnetic starter furnished under Division 16 or with equipment.
         2) Abnormal Power Protection: 3-phase power monitors. Wire control contacts in series with motor start/stop control relay contacts.
            a) Alarm: Wire alarm contacts to DDC system points specified in Part 2.
         3) Safeties: Wire contacts for safety devices such as freeze-protection thermostats, and end switches in series with motor start/stop control relay contacts.
         4) Smoke Detector or Fire Alarm Interface: Wire contacts in series with motor start/stop control relay contacts. Verify location of contacts provided under Fire Alarm Contract.
      b. Variable Speed:
         1) Speed Controller: As specified in section 232923.
         2) Motor Disconnect Auxiliary Contacts: Wired to prevent drive operation if disconnect is open.
         3) Safeties: Wire contacts for safety devices such as freeze-protection thermostats, and end switches to disable drive.
         4) Smoke Detector or Fire Alarm Interface: Wire contacts to disable drive. Verify location of contacts provided under Fire Alarm Contract.
B. Smoke Dampers: Provide wiring for smoke dampers and combination fire/smoke dampers provided under this Division.
C. Data Base Generation: Complete with dynamic graphic displays and alarm assignments.

2.01 AIR HANDLING UNIT OPERATING SEQUENCE (for AH1NW-11 & AH3NW-27)

A. Systems' performance intent: This AHU provides VAV control for occupied ED and clinical spaces and is equipped with chilled water cooling coils, steam heating coils, filter sections, mixing boxes, supply and return fan arrays, and other elements as shown on this drawing. Units shall have variable volume flow with constant minimum outdoor air intakes based on scheduled airflows shown on drawings (except in economizer mode).

B. Network Architecture: Air handling unit controller, supply fan motor speed controller, and return fan motor speed controller connected via common secondary control network supervised by a master control unit.

1. Supply Fan MSC Hardware Point Summary:

DESCRIPTION	TYPE	FIELD INTERFACE
SUPPLY AIR CFM	ANALOG INPUTS	EXISTING AIR FLOW STATIONS
SUPPLY FAN STATUS/SPEED **	ANALOG OUTPUT	MOTOR SPEED CONTROLLERS(multiple)
SUPPLY DUCT STATIC PRESSURE	ANALOG INPUT	EXISTING PRESSURE SENSOR
HIGH LIMIT DUCT STATIC SAFETY	ANALOG INPUT	PRESSURE SENSOR
PREFILTER	ANALOG INPUT	DIFFERENTIAL PRESSURE SENSOR
FINAL FILTER	ANALOG INPUT	DIFFERENTIAL PRESSURE SENSOR
SAFETIES INTERLOCK	DIGITAL INPUTS	MULTIPLE CONTACTS
VFD ENABLE/OFF **	DIGITAL INPUT	AHU CONTROLLER OUTPUT.

Return Fan MSC Hardware Point Summary:

DESCRIPTION	TYPE	FIELD INTERFACE
RETURN AIR CFM	ANALOG INPUTS	EXISTING AIR FLOW STATIONS
RETURN FAN STATUS/SPEED(x2)	ANALOG OUTPUT	MOTOR SPEED CONTROLLERS(multiple)
SAFETIES INTERLOCK	DIGITAL INPUTS	MULTIPLE CONTACTS
MSC ENABLE/OFF	DIGITAL INPUT	AHU CONTROLLER OUTPUT

Air Handling Unit Controller Hardware Point Summary:

DESCRIPTION	TYPE	FIELD INTERFACE
DISCHARGE AIR TEMPERATURE	ANALOG INPUT	TEMPERATURE SENSOR
RETURN AIR TEMPERATURE	ANALOG INPUT	TEMPERATURE SENSOR
MIXED AIR TEMPERATURE	ANALOG INPUT	TEMPERATURE SENSOR
RETURN AIR HUMIDITY	ANALOG INPUT	HUMIDISTAT
SUPPLY AIR HIGH LIMIT HUMIDITY	ANALOG INPUT	HUMIDISTAT
LOW TEMPERATURE ALARM	ANALOG INPUT	FREEZESTAT
OUTSIDE AIR CFM	ANALOG INPUT	AIR FLOW STATION
OUTSIDE AIR TEMPERATURE	ANALOG INPUT	TEMPERATURE SENSOR
EXHAUST PLENUM PRESSURE	ANALOG INPUT	PRESSURE SENSOR
COOLING COIL VALVE	ANALOG OUTPUT	VALVE ACTUATOR
PREHEAT VALVE	ANALOG OUTPUT	VALVE ACTUATOR
IFB COIL BYPASS	ANALOG OUTPUT	DAMPER ACTUATOR
HUMIDIFIER CONTROL	ANALOG OUTPUT	VALVE ACTUATOR
RETURN DAMPER	ANALOG OUTPUT	DAMPER ACTUATORS
OUTSIDE AIR DAMPER(minimum)	ANALOG OUTPUT	DAMPER ACTUATORS ***
OUTSIDE AIR DAMPER(economizer)	ANALOG OUTPUT	DAMPER ACTUATORS ***
RELIEF DAMPERS	ANALOG OUTPUTS	DAMPER ACTUATORS ***
BACKFEED SUPPLY AIR DAMPER(S)	ANALOG OUTPUTS	DAMPER ACTUATORS ***
BACKFEED RETURN AIR DAMPER	ANALOG OUTPUTS	DAMPER ACTUATORS ***
BYPASS DAMPERS (X3)	ANALOG OUTPUTS	DAMPER ACTUATORS ***
SMOKE ISOLATION DAMPERS(exist)	DIGITAL OUTPUT	DAMPER ACTUATORS ***
MSC ENABLE/OFF	DIGITAL OUTPUT	CONTROL RELAY
ISOLATION DAMPERS STATUS	DIGITAL INPUT	ACTUATOR END SWITCHES

Master Control Unit Hardware Point Summary:

DESCRIPTION	TYPE	FIELD INTERFACE
OUTSIDE AIR RELATIVE HUMIDITY	ANALOG INPUT	EXTERIOR RH SENSOR
OUTSIDE AIR TEMPERATURE	ANALOG INPUT	TEMPERATURE SENSOR
FIRE/SMOKE DAMPERS O/C	DIGITAL OUTPUT	CONTROL RELAY
FIRE/SMOKE DAMPER STATUS	DIGITAL INPUT	DAMPER END SWITCHES

** FanWall, or AcoustiFlo fan array, supply fans will have multiple fans operating in unison with separate control points for each individual fan module. Coordinate with manufacturer shop drawing wiring diagrams.

Mode Indexing

1. OCCUPIED/UNOCCUPIED: The occupancy mode (Occupied or Unoccupied) shall be determined through a user-adjustable, graphical, seven-day schedule with a holiday schedule. The start time shall be adjusted by an optimum start routine such that the unit is started at the latest possible time to allow the space temperatures to be at the occupied set point at the time of occupancy.
2. UNOCCUPIED: The supply and return fans shall run continuously with outside air dampers and exhaust dampers closed.
   2.1. Unoccupied Off Coil Protection: When the outdoor air temperature is below the Outside Air Low Temperature Protection Set point at 35F (adjustable) and the mixed air temperature is less than the Mixed Air Low Temperature Protection Set point at 45°F (adjustable), OR the Low Temperature Limit trips, then the heating coil valve shall cycle to maintain mixed air temperature of 50°F (adjustable). When the outdoor air temperature is above the Outside Air Low Temperature Protection Set point (35F + deadband (adjustable), or the mixed air temperature is greater than the Mixed Air Low Temperature Protection Set point (45°F + deadband) the heating coil valve shall be closed.
   2.2. Unoccupied Setback: The outside and exhaust dampers close when the space temperature drops below the unoccupied set point of 65°F (adjustable) and shall operate until the coldest space is 4F (adjustable) above the unoccupied set point.
   2.3. Morning Warm-up: If the lowest space temperature is below the occupied temperature set point and the outdoor air temperature is below 40F (adjustable), morning warm-up shall be initiated by the optimum start program. The optimum start-stop program shall start the unit at the latest possible time. The outside air dampers shall be closed during the morning warm-up cycle. If the coldest space temperature is below occupied heating set point, the unit shall warm the space to set point by raising the unit supply temperature to 80°F (adjustable) until the space is satisfied. When the space has reached set point, the unit shall operate in the occupied mode. If the space reaches the heating set point before occupancy, the coil shuts off. If occupancy occurs before the space reaches the heating set point, the system switches to occupied mode. Morning warm-up shall occur only once in a day.
   2.4. Morning Pre-cooling: If space temperature exceeds pre-cooling space temperature set point, and the outside air temperature is above 60F, morning pre-cooling may begin. The unit shall start in the morning pre-cool mode as determined by an optimum start program at the latest possible time to have the space at the occupied set point at occupancy time. The outside air and return air dampers shall be closed. Chilled water cooling coil control valve shall cycle to maintain 50F (adjustable) supply air temperature. Heating shall be disabled. When the space has reached set point, the unit shall operate in the occupied mode. If the space reaches the pre-cooling set point before occupancy, the coil shuts off. Morning cool-down shall occur only once in a day.
3. SHUTDOWN: By command from master control unit via secondary control network, and by local safety controls. Whenever the supply fan is de-energized, as sensed by the status switch, the return fan shall be de-energized, the outside and exhaust air dampers shall be closed and the return air damper shall be open, the heating and cooling valves shall be closed or positioned as described below.

E. Supply and Return Fan Operation:
   1. Continuous during OCCUPIED mode (refer to 'Fan Speed' control sequences).

F. System Startup Sequence: Commanded by MCU. The supply fan shall be energized. The supply air duct static pressure set point shall be slowly ramped from zero to the final set point value when the supply fan is started. The air handling unit supply fan speed shall modulate to maintain duct static pressure set point The supply fan speed shall not drop below 30% (adjustable) to assure adequate fan motor cooling The static pressure set point shall be reset so that at least one of the VAV boxes is at 90% (adjustable) of its cfm flow set point and maintaining its space temperature set point.
   1. Unit Smoke Isolation Dampers: Commanded to open by AHU controller and proved OPEN, via damper end switches, before enabling fan motor speed controllers.
   2. System Smoke Dampers: Commanded open by AHU controller.
   3. Fan Motor Speed Controllers: Enabled by AHU controller.
   4. Supply Fan VFD: Enabled by AHU controller.
   5. Motor Speed Controllers: Ramp up fan speeds to achieve initial set points downloaded from AHU controller. (Install duct static pressure sensor 2/3 down supply main, verify exact location with engineer of record.)
      a. Supply Duct Static Pressure Set Point: 1.50" w.g

G. Supply Fan Speed: Regulated by its VFD to maintain supply duct static pressure set point downloaded from MCU. In the event of loss of communication with one or more VAV controllers the system shall revert to modulating the fan speed to maintain the duct static pressure set point of 1.50" w.g. (adjustable). A high limit function shall reduce the supply fan speed to keep the supply duct pressure from exceeding 2.50" inches of water regardless of the demand from the VAV boxes. The final duct static pressure set point shall be determined in consultation with the balancing contractor. When the supply fan is de-energized the static set point shall be zero.
   1. Operating Set Point: Optimized using an algorithm that repeatedly polls VAV box controllers to determine minimum pressure that will satisfy air flow demands. Initial static pressure setpoint shall be 1.5" w.c. (adj).
   2. Safety High Limit: Differential pressure switch across fan wired to VFD safety interlock to cause fan shutdown when differential pressure exceeds set point.
      a. Set Point: 7.0" w.g.

H. Return Fan Speed: Regulated by its VFD to maintain static pressure set point inside the mixing section of the AHU downloaded from MCU. In the event of loss of communication with one or more VAV controllers the system shall revert to modulating the fan speed to maintain a slightly positive mixing box static pressure set point of 0.05" w.g. (adjustable). A high limit function shall reduce the return fan speed to keep the incoming pressure from exceeding −2.5 inches of water regardless of the demand from the sensor. The final static pressure set point shall be determined in consultation with the balancing contractor. When the supply fan is de-energized the static set point shall be zero.
   1. Operating Set Point: Whenever the supply fan is energized, the return fan shall be energized. The return fan speed shall modulate to maintain the exhaust air plenum pressure set point of 0.05 inch of water (adjustable). The exhaust air damper shall modulate to maintain the building static pressure set point of 0.002 inch of water (adjustable) referenced to outside air static pressure.
   2. Safety High Limit: Differential pressure switch across fan wired to MSC safety interlock to cause fan shutdown when differential pressure exceeds set point.
      a. Set Point: 3.0" w.g.

I. Discharge Air Temperature Set Point: The heating coil valve, mixed air dampers, and cooling coil valve shall modulate in sequence to maintain supply air temperature set point. Provide deadband between heating and economizer cooling.
   1. Output to Controlled Devices: Ranged from 0 to 100% as discharge temperature varies through heating and cooling proportional bands.
   2. Integral Function: Added to control loop to eliminate proportional band offset.

K. Cooling Coil Valve:
   1. Normal Position: Closed.
   2. Action: Increasing chilled water flow as discharge air temperature rises through cooling proportional band.

L. IFB Preheat Coil Valve:
   1. Normal Position: Open.
   2. Action: Increasing steam flow to full flow as discharge air temperature falls through heating proportional band.
   3. Bypass Damper: Shall modulate full open upon call for heating. (Controls Contractor to integrate separate logic sequence to modulate bypass with steam valve fully open for traditional IFB control sequence if desired to switch over by VA)

Outside Air Economizer Cycle: Enabled when unit outside air enthalpy is below enthalpy switch-over set point minus a 1.0 Btu/lb. differential, and outside air dry-bulb temperature is below switch-over set point minus a 2°F differential. The OA damper shall have an adjustable absolute minimum position set in conjunction with the balance contractor.
   1. Switch-Over Enthalpy Set Point: 22.5 Btu/lb.
   2. Switch-Over Temperature Set Point: 58 °F.
   3. Enthalpy Value: Calculated using outside air dry-bulb and relative humidity values.
   4. Failure Mode: Economizer OFF.
   5. Damper Positions:
      i. Outside Air Damper: Modulate Open
      ii. Relief Air Dampers: Modulate Open
      iv. Return Air Damper: Modulate Closed
   6. Fan Operations
      i. Supply Fan: Modulate on supply duct static sensor as previous, see above.
      j. Return Fan: Modulate on return duct static sensor as previous, see above.

N. Minimum Outside Air Damper:
   1. Modulate damper to maintain minimum airflow setpoint in OCCUPIED mode.
   2. Closed in UNOCCUPIED mode.

O. Return Air and Relief Air Dampers: Controlled to regulate outside air flow rate to satisfy demands of discharge air temperature control loop (outside air economizer) and minimum outside air flow rate control loop.
   1. Return Air Damper Normal Position: Open.
   2. Relief Air Dampers Normal Position: Closed.
   3. Outside Air Flow Rate: Maintained above low limit set point by positioning return air and relief air dampers when unit is operating in OCCUPIED mode.
      a. Action: Increasing outside air as flow rate falls through deadband around set point into proportional band.
      b. Integral Function: Added to control loop to eliminate proportional band offset.
      c. Minimum Outside Air Flow Set Point: refer to equipment schedules

P. Unit Smoke Isolation Dampers:
   1. Closed when unit is in SHUTDOWN mode.
   2. Proved open via end switches before fan operation is permitted.

Q. System Smoke Dampers:
   1. Closed whenever unit is off.
   2. Proved open via end switches before starting unit.

Q. Safety Shutdowns
   1. Duct smoke detection, space smoke detection, high pressure safeties, low pressure safeties and low temperature limit trips shall de-energize the air handling unit and close the outside air and exhaust air dampers. Manual reset of the tripped device shall be required to restart the system.
   2. When the OA temperature is below 40°F (adjustable) and the air-handling unit has shut down in alarm, the heating and cooling valves shall function as described in unoccupied mode.

R. Communications Failure Responses:
   1. Upon MSC Communications Failure Detected by MCU:
      a. AHU Controller: Commanded to SHUTDOWN mode by MCU.
      b. Fan Motor Speed Controllers: Commanded OFF by AHU controller.
   2. Upon MCU Communication Failure Detected by AHU Controller:
      a. AHU Controller: Indexed to SHUTDOWN mode.
      b. Fan Motor Speed Controllers: Commanded OFF by AHU controller.

2.02 AIR HANDLING UNIT OPERATING SEQUENCE (for AH2NW-19 & AH2NW-20)

A. Systems' performance intent: This AHU provides VAV control for occupied surgical spaces and is equipped with chilled water cooling coils, steam heating coils, filter sections, mixing boxes, supply and return fan arrays, and other elements as shown on this drawing. Units shall have variable volume flow with constant minimum outdoor air intakes based on schedules airflows on drawings (except in economizer mode).

B. Network Architecture: Air handling unit controller, supply fan motor speed controller, and return fan motor speed controller connected via common secondary control network supervised by a master control unit.

1. Supply Fan MSC Hardware Point Summary:

DESCRIPTION	TYPE	FIELD INTERFACE
SUPPLY AIR CFM	ANALOG INPUTS	DUCT MOUNTED AIR FLOW STATION
SUPPLY FAN STATUS/SPEED **	ANALOG OUTPUT	MOTOR SPEED CONTROLLERS(multiple)
SUPPLY DUCT STATIC PRESSURE	ANALOG INPUT	PRESSURE SENSOR
HIGH LIMIT DUCT STATIC SAFETY	ANALOG INPUT	PRESSURE SENSOR
PREFILTER	ANALOG INPUT	DIFFERENTIAL PRESSURE SENSOR
FINAL FILTER	ANALOG INPUT	DIFFERENTIAL PRESSURE SENSOR
SAFETIES INTERLOCK	DIGITAL INPUTS	MULTIPLE CONTACTS
VFD ENABLE/OFF **	DIGITAL INPUT	AHU CONTROLLER OUTPUT.

Return Fan MSC Hardware Point Summary:

DESCRIPTION	TYPE	FIELD INTERFACE
RETURN AIR CFM	ANALOG INPUTS	DUCT MOUNTED AIR FLOW STATION
RETURN FAN STATUS/SPEED (X2)	ANALOG OUTPUT	MOTOR SPEED CONTROLLERS (X2)
SAFETIES INTERLOCK	DIGITAL INPUT	MULTIPLE CONTACTS
MSC ENABLE/OFF	DIGITAL INPUT	AHU CONTROLLER OUTPUT

Air Handling Unit Controller Hardware Point Summary:

DESCRIPTION	TYPE	FIELD INTERFACE
DISCHARGE AIR TEMPERATURE	ANALOG INPUT	TEMPERATURE SENSOR
RETURN AIR TEMPERATURE	ANALOG INPUT	TEMPERATURE SENSOR
MIXED AIR TEMPERATURE	ANALOG INPUT	TEMPERATURE SENSOR
RETURN AIR HUMIDITY	ANALOG INPUT	HUMIDISTAT
SUPPLY AIR HIGH LIMIT HUMIDITY	ANALOG INPUT	HUMIDISTAT
LOW TEMPERATURE ALARM	ANALOG INPUT	FREEZESTAT
EXHAUST PLENUM PRESSURE	ANALOG INPUT	PRESSURE SENSOR
COOLING COIL VALVE	ANALOG OUTPUT	VALVE ACTUATOR
PREHEAT VALVE	ANALOG OUTPUT	VALVE ACTUATOR
IFB COIL BYPASS	ANALOG OUTPUT	DAMPER ACTUATOR
HUMIDIFIER CONTROL	ANALOG OUTPUT	VALVE ACTUATOR
RETURN DAMPER	ANALOG OUTPUT	DAMPER ACTUATORS
OUTSIDE AIR DAMPER(minimum)	ANALOG OUTPUT	DAMPER ACTUATORS ***
OUTSIDE AIR DAMPER(economizer)	ANALOG OUTPUT	DAMPER ACTUATORS ***
RELIEF DAMPERS	ANALOG OUTPUTS	DAMPER ACTUATORS ***
BACKFEED SUPPLY AIR DAMPER(S)	ANALOG OUTPUTS	DAMPER ACTUATORS ***
BACKFEED RETURN AIR DAMPER	ANALOG OUTPUTS	DAMPER ACTUATORS ***
BYPASS DAMPERS (X3)	ANALOG OUTPUTS	DAMPER ACTUATORS ***
SMOKE ISOLATION DAMPERS(exist)	DIGITAL OUTPUT	DAMPER ACTUATORS ***
MSC ENABLE/OFF	DIGITAL OUTPUT	CONTROL RELAY
ISOLATION DAMPERS STATUS	DIGITAL INPUT	DAMPER END SWITCHES

Master Control Unit Hardware Point Summary:

DESCRIPTION	TYPE	FIELD INTERFACE
OUTSIDE AIR RELATIVE HUMIDITY	ANALOG INPUT	EXTERIOR RH SENSOR
OUTSIDE AIR TEMPERATURE	ANALOG INPUT	TEMPERATURE SENSOR
FIRE/SMOKE DAMPERS O/C	DIGITAL OUTPUT	CONTROL RELAY
FIRE/SMOKE DAMPER STATUS	DIGITAL INPUT	DAMPER END SWITCHES

** FanWall, or AcoustiFlo fan array, supply fans will have multiple fans operating in unison with separate control points for each individual fan module. Coordinate with manufacturer shop drawing wiring diagrams.

*** Due to large size of ducts many damper locations may have several motorized actuators for each location.

Mode Indexing

1. OCCUPIED/UNOCCUPIED: Operating Room Suites are a continuous operation and should always be considered in a OCCUPIED mode of operation.
2. SHUTDOWN: By command from master control unit via secondary control network, and by local safety controls. Whenever the supply fan is de-energized, as sensed by the status switch, the return fan shall be de-energized, the outside and exhaust air dampers shall be closed and the return air damper shall be open, the heating and cooling valves shall be closed or positioned as described below.

E. Supply and Return Fan Operation:
   1. Continuous during OCCUPIED mode (refer to 'Fan Speed' control sequences).
   2. General: Each air handling unit comprises of a supply fan array which its speed is controlled by variable frequency drives, one dedicated for each individual fan, operating together in unison. Supply fan array speed shall be modulated to maintain the duct static pressure setpoint which shall be automatically reset to meet zone airflow demands. Return fans shall be controlled via airflow tracking to maintain an airflow differential to provide indirect building pressure control. Return fan speed to be controlled by variable frequency drive. The outside air, return and relief dampers also must be integrated with the fan tracking to ensure minimum ventilation air and to maintain proper pressure relationships within the system. The damper controls are discussed in the minimum OA and Economizer control section.
      a. Supply fan:
         1) Shall be enabled to run continuously, unless shutdown on safeties.
         2) The initial duct static pressure setpoint shall be 1.50 in H2O (adj.).
         3) The supply fan array VFD minimum speed setting within the VFD itself shall be optimized in the field during system balancing and commissioning to be as low as possible while avoiding inertial stalling of fan, approximately 5% above the field observed stall speed of the fan operating in the system.
         4) Airflow measuring station shall continuously monitor the total supply air volume in CFM and send output to the BAS.
      c. Return Air Fan Control: The RA fan array shall be enabled in unison with the supply fan array and its speed shall be controlled in sequence along with mixing dampers to maintain a return duct static pressure that the balancing contractor has verfied to provide the adequate supply/return cfm offset to keep the building area served at the desired airflow/pressure relationship with respect to ambient and adjacent zones; and the return/relief air plenum always slightly positive with respect to mixed air (OA/RA) plenum AND to ambient.
         1) Airflow measuring station shall continuously monitor the total system return volume in CFM and send output to the BAS.
         2) Airflow Tracking Control: Offset shall be maintained as calculated per section following.
         3) Refer to Minimum OA and Economizer control sequence for coordinated mixing damper and relief fan control sequence.
         4) The return fan VFD minimum speed setting within the VFD itself shall be optimized in the field during system balancing and commissioning to be as low as possible while avoiding inertial stalling of fan, approximately 5% above the field observed stall speed of the fan operating in the system.
      d. Airflow Tracking Control: Total system return air shall continuously track and trend supply and return air cfm via airflow measuring stations for reference only.

F. System Startup Sequence: Commanded by MCU. The supply fan shall be energized. The supply air duct static pressure set point shall be slowly ramped from zero to the final set point value when the supply fan is started. The air handling unit supply fan speed shall modulate to maintain duct static pressure set point The supply fan speed shall not drop below 30% (adjustable) to assure adequate fan motor cooling The static pressure set point shall be reset so that at least one of the VAV boxes is at 90% (adjustable) of its cfm flow set point and maintaining its space temperature set point.
   1. Unit Smoke Isolation Dampers: Commanded to open by AHU controller and proved OPEN, via damper end switches, before enabling fan motor speed controllers.
   2. System Smoke Dampers: Commanded open by AHU controller.
   3. Fan Motor Speed Controllers: Enabled by AHU controller.
   4. Supply Fan VFD: Enabled by AHU controller.
   5. Motor Speed Controllers: Ramp up fan speeds to achieve initial set points downloaded from AHU controller. (Install duct static pressure sensor 2/3 down supply main, verify exact location with engineer of record.)
      a. Supply Duct Static Pressure Set Point: 1.50" w.g.
      b. Return Duct Static Pressure Set Point: −0.75" w.g.

G. Supply Fan Speed: Regulated by its VFD to maintain supply duct static pressure set point downloaded from MCU. In the event of loss of communication with one or more VAV controllers the system shall revert to modulating the fan speed to maintain the duct static pressure set point of 1.50" w.g. (adjustable). A high limit function shall reduce the supply fan speed to keep the supply duct pressure from exceeding 3.0" inches of water regardless of the demand from the VAV boxes. The final duct static pressure set point shall be determined in consultation with the balancing contractor. When the supply fan is de-energized the static set point shall be zero. (NOTE – In either multiple FanWall, or fan array, configurations all fans shall ramp up and down simultaneously in unison regardless of the number of fans and VFD's. Fan optimization will be determined by the manufacturer to shut down a set number of fans during standard 'non-backfeed mode' to achieve maximum fan efficiency in either mode of operation.)
   1. Operating Set Point: Optimized using an algorithm that repeatedly polls existing VAV box controllers to determine minimum pressure that will satisfy air flow demands. Initial duct static setpoint to be at 1.5" w.c.
   2. Fan Array Fan Cycling Function: Coordinate with Balancing Contractor and engineer the number of fan(s) in the array that may need to be shut down during normal operation for peak fan efficiency. Remaining fans in operation shall cycle operation daily to insure equal run time for all motors.
   3. Safety High Limit: Differential pressure switch across fan wired to VFD safety interlock to cause fan shutdown when differential pressure exceeds set point.
      a. Set Point: 7.0" w.g.
   4. Return Fan Speed: Regulated by its VFD to maintain return airflow differential downloaded from MCU. Balancing Contractor shall coordinate this airflow differential setpoint through O.R. pressurization testing after each phase of construction.
   5. Operating Set Point: Whenever the supply fan is energized, the return fan shall be energized. The exhaust air damper shall modulate to maintain a static pressure within the Sterile Corridor at a set point of 0.01 inch of water (adjustable) referenced to outside air static pressure. Relief air shall never be allowed to be more than minimum O.A. intake volume.
   6. Return Fan Isolation Function: Coordinate with Balancing Contractor and Engineer is one of the two return fans should be isolated out of operation during normal operation to maximize fa efficiency. If one fan is operational then the control sequence shall automatically cycle between fans by opening/closing the motorized isolation dampers for each and switching operation on a daily basis to ensure equal run times for each motor.
   7. Safety High Limit: Differential pressure switch across fan wired to MSC safety interlock to cause fan shutdown when differential pressure exceeds set point.
      a. Set Point: 3.0" w.g.

I. Discharge Air Temperature Set Point: The heating coil valve, mixed air dampers, and cooling coil valve shall modulate in sequence to maintain supply air temperature set point. Provide deadband between heating and economizer cooling.
   1. Output to Controlled Devices: Ranged from 0 to 100% as discharge temperature varies through heating and cooling proportional bands.
   2. Integral Function: Added to control loop to eliminate proportional band offset.

J. Backfeed Mode of Operation: This mode of operation will allow a single air handling unit to serve all areas for both AH2NW-19 and AH2NW-20 simultaneously while the other unit is shut down for maintenance service, or emergency repair. This operation sequence shall be engaged by a manual signal through the building automation system (password protected, or other means of control, to avoid accidental implementation). Once enabled, all supply, and return, fans for both units shall ramp down to full stop. After fan shut down than all cross-over dampers into the unit commanded to full backfeed operation will be cycled fully open and the supply and return fans in that unit will restart and ramp up in speed to maintain both static pressure sensors for each system. All supply, and return, dampers on disabled AHU, for both regular and bypass operation, will be fully closed after a brief delay after all fans cycle off.
   1. Airfoil Control Damper Modulation: Modulate supply and return fans based on most demanding static pressure sensor input. The isolation control dampers for the other system shall modulate to reduce pressure for the higher static pressure sensor.
   2. Automatic Switchover Function: If damper remains fully open, and static pressure is still not satisfied after an adjustable time delay, then switch control of fan to the alternate duct static pressure and modulate the opposite control damper for control of adjacent system ductwork. This control sequence is mimicked for both supply and return fans.

K. Cooling Coil Valve:
   1. Normal Position: Closed.
   2. Action: Increasing chilled water flow as discharge air temperature rises through cooling proportional band.

L. IFB Preheat Coil Valve:
   1. Normal Position: Open.
   2. Action: Increasing steam flow to full flow as discharge air temperature falls through heating proportional band.
   3. Bypass Damper: Shall modulate full open upon call for heating. (Controls Contractor to integrate separate logic sequence to modulate bypass with steam valve fully open for traditional IFB control sequence if desired to switch over by VA)

Outside Air Economizer Cycle: Enabled when unit outside air enthalpy is below enthalpy switch-over set point minus a 1.0 Btu/lb. differential, and outside air dry-bulb temperature is below switch-over set point minus a 2°F differential. The OA damper shall have an adjustable absolute minimum position set in conjunction with the balance contractor.
   1. Switch-Over Enthalpy Set Point: 20.0 Btu/lb.
   2. Switch-Over Temperature Set Point: 54 °F.
   3. Enthalpy Value: Calculated using outside air dry-bulb and relative humidity values.
   4. Failure Mode: Economizer OFF.
   5. Damper Positions:
      i. Outside Air Damper: Modulate Open
      ii. Relief Air Dampers: Modulate Open
      iv. Return Air Damper: Modulate Closed
   6. Fan Operations
      i. Supply Fan: Modulate on supply duct static sensor as previous, see above.
      j. Return Fan: Modulate on return duct static sensor as previous, see above.

N. Minimum Outside Air Damper:
   1. Modulate damper to maintain minimum airflow setpoint in OCCUPIED mode.
   2. Closed in SHUTDOWN mode.

O. Return Air and Relief Air Dampers: Controlled to regulate outside air flow rate to satisfy demands of discharge air temperature control loop (outside air economizer) and minimum outside air flow rate control loop.
   1. Return Air Damper Normal Position: Open.
   2. Relief Air Dampers Normal Position: Closed.
   3. Outside Air Flow Rate: Maintained above low limit set point by positioning return air and relief air dampers when unit is operating in OCCUPIED mode.
      a. Action: Increasing outside air as flow rate falls through dead