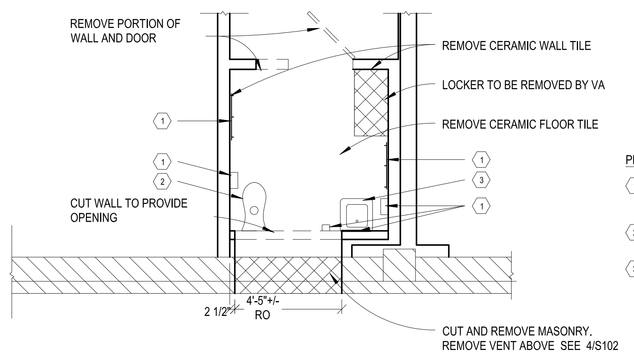

PLAN NOTES:

1. REMOVE ALL MISC ITEMS LIKE PAPER DISPENSER, COAT HANGERS, MIRRORS ETC.
2. REMOVE WC AND CAP PLUMBING OUTSIDE OF NEW OPENING
3. REMOVE SINK, FAUCET AND CAP PLUMBING OUTSIDE OF NEW OPENING

KEEP PREMISES CLEAN AFTER EACH WORKDAY AND DISCARD ALL DEBRIS AND ITEMS NOTED TO BE REMOVED

1 DEMOLITION PLAN
1/4" = 1'-0"

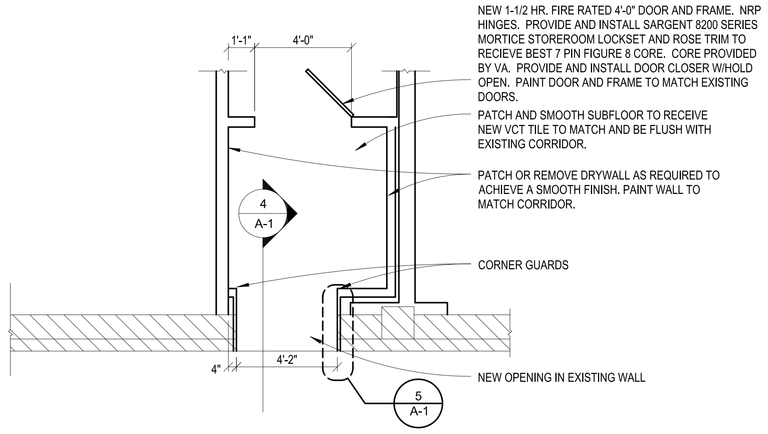

2 FLOOR PLAN
1/4" = 1'-0"

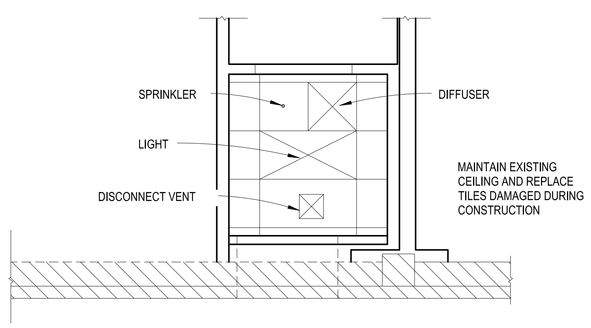

3 REFLECTED CEILING PLAN
1/4" = 1'-0"

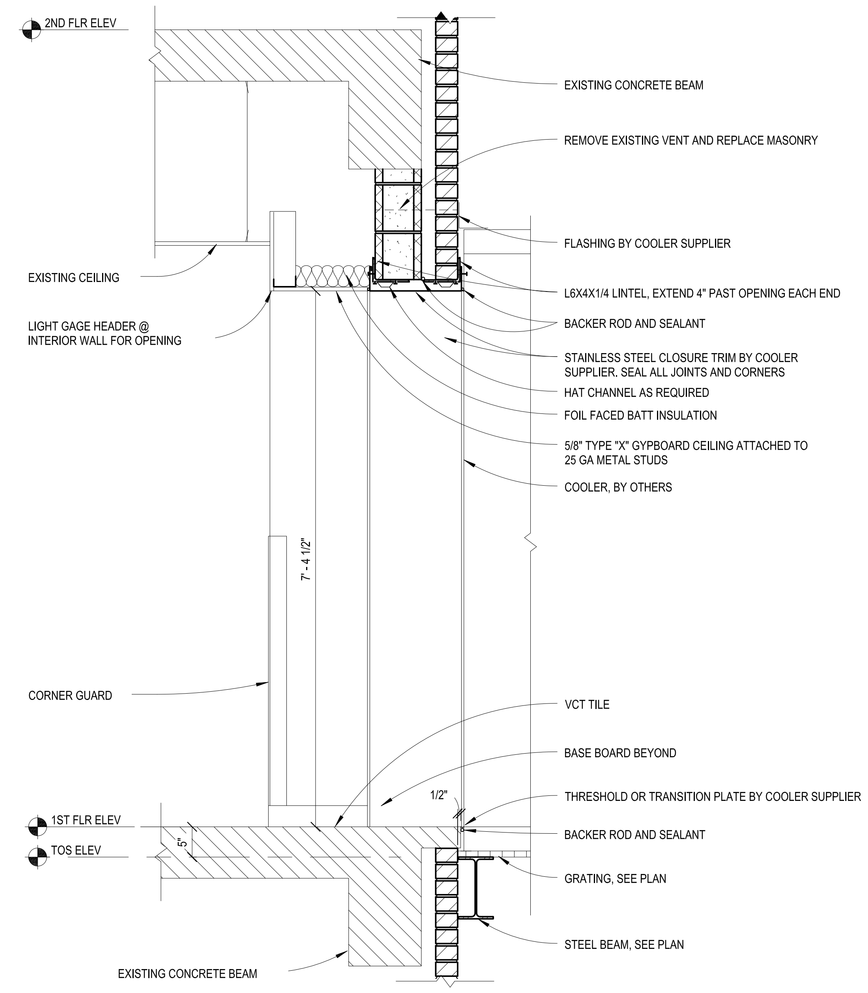

4 SECTION (OPENING TO COOLER)
3/4" = 1'-0"

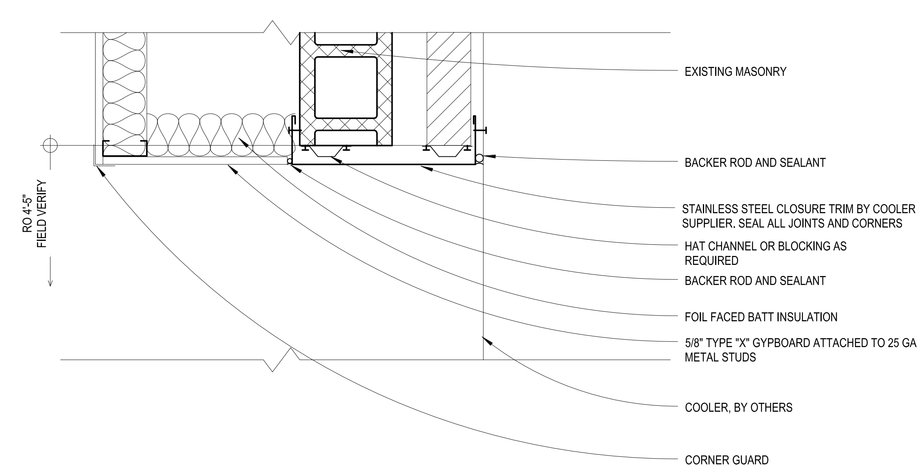

5 JAMB DETAIL (OPENING TO COOLER)
1 1/2" = 1'-0"

REVISIONS:	DATE

Dept. of Veterans Affairs
Medical Center
1011 Honor Heights Drive
Muskogee, OK. 74401

APPROVED: Medical Center Director	APPROVED: Chief, VCS	APPROVED: Infection Control Nurse
APPROVED: Assoc.Medical Center Director	APPROVED: Safety Manager	APPROVED: President AFGE 2250
APPROVED: Chief of Staff	APPROVED: Industrial Hygenist	APPROVED:
APPROVED: Chief, Engineering	APPROVED: Energy Manager	APPROVED:

DRAWING TITLE: Reefer Architectural Details

PROJECT TITLE: Upgrade Canteen Refrigeration & Dishwashing

DATE: 06JUN2014

SCALE: NTS

PROJECT NO.	CONTRACT NO.	DESIGNED BY:	DRAWN BY:	CHECKED BY:	DRAWING NO.
623-15-102			B. Short		A1
BUILDING NO. 24	AUTOCAD FILE NAME: 62315102-A1	LOCATION: V.A.M.C MUSKOGEE, OK.			DWG. 4 OF 8

DEPARTMENT OF VETERANS AFFAIRS