Attachment 2

10. Storage

TW320. - Storage Cabinet
36" wide Double Door Unit

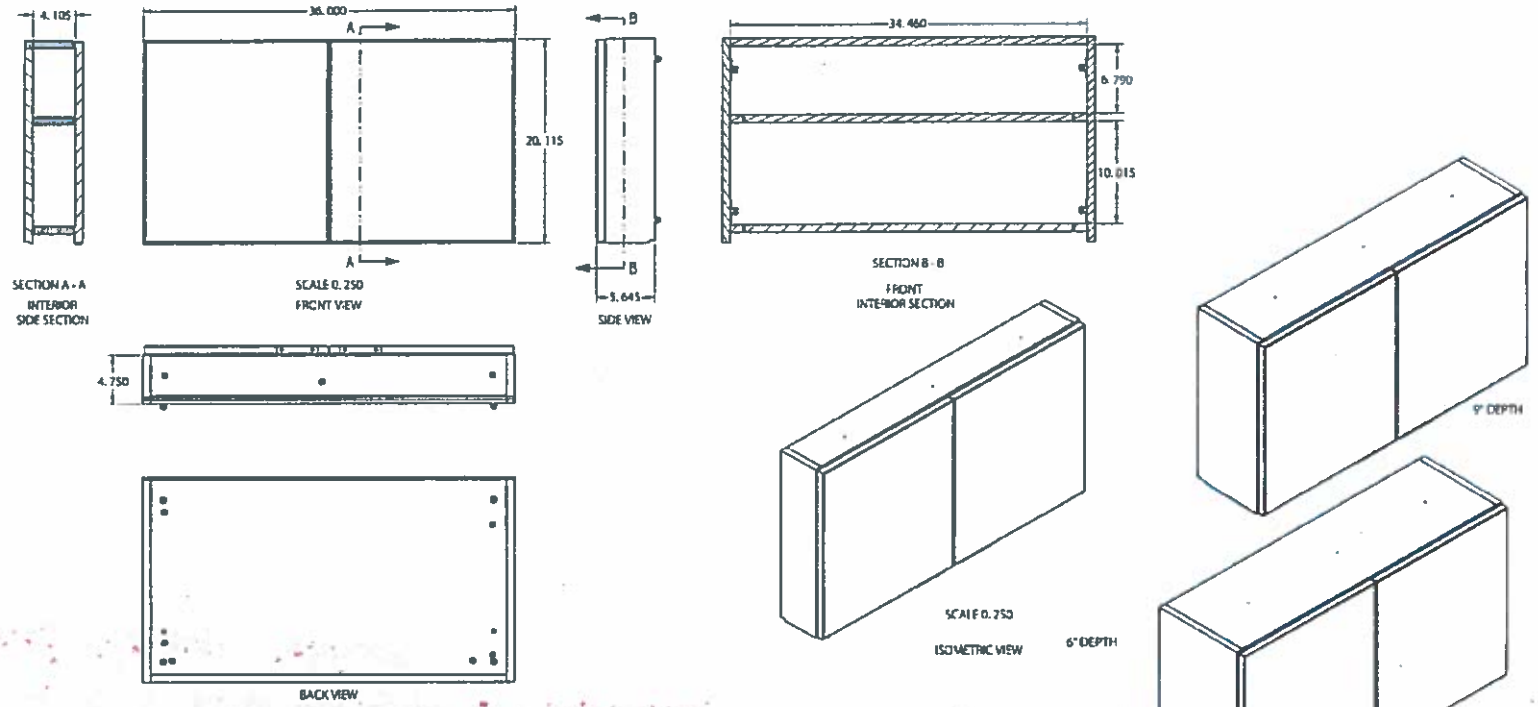

Depth	Height	Depth	Width	Interior Side Section	Back of Cabinet to Front Edge (This is the space between the back of the cabinet to the back of the door)
6" deep	20.115	5.645	24,30,36	4.105	4.75
9" deep	20.115	9	24,30,36	7.46	8.105
13" deep	20.115	12.745	24,30,36	11.205	10.31