GROUND FLOOR - DOOR AND FRAME SCHEDULE

DOOR NO.	DOOR SIZE W x H	DOOR SIZE THK	DOOR TYPE	DOOR MATL	FRAME TYPE	FRAME MATL	DETAIL HEAD	DETAIL JAMB	DETAIL SILL	FIRE RATING	HDWR SET	REMARKS
G-18F	3'-2" x 7'-0"	1 3/4"	C	WD	1	HM	1/A601	2/A601	3/A601	--	HW-3F	--
G31	3'-6" x 8'-0"	NA	--	--	1	HM	4/A601	5/A601	--	--	--	CASED OPENING
G32	3'-6" x 7'-0"	1 3/4"	A	WD	1	HM	1/A601	2/A601	3/A601	--	HW-1L	--
G33	3'-6" x 7'-0"	1 3/4"	A	WD	1	HM	1/A601	2/A601	3/A601	--	HW-1L	--
G34	3'-6" x 7'-0"	1 3/4"	A	WD	1	HM	1/A601	2/A601	3/A601	--	HW-4G	--
G35	3'-6" x 7'-0"	1 3/4"	A	WD	1	HM	1/A601	2/A601	3/A601	--	HW-4G	--
G36	3'-6" x 7'-0"	1 3/4"	A	WD	1	HM	1/A601	2/A601	3/A601	--	HW-1L	--
G37	3'-0" x 7'-0"	1 3/4"	C	WD	1	HM	1/A601	2/A601	3/A601	--	HW-3E	--
G38	3'-6" x 7'-0"	1 3/4"	A	WD	1	HM	1/A601	2/A601	3/A601	--	HW-1L	--
G39	3'-6" x 7'-0"	1 3/4"	A	WD	1	HM	1/A601	2/A601	3/A601	--	HW-4G	--
G40	3'-0" x 7'-0"	1 3/4"	A	WD	1	HM	1/A601	2/A601	3/A601	--	HW-5D	--
G41	3'-6" x 7'-0"	1 3/4"	A	WD	1	HM	1/A601	2/A601	3/A601	--	HW-1L	--
G42	3'-6" x 7'-0"	1 3/4"	A	WD	1	HM	1/A601	2/A601	3/A601	--	HW-1L	--
G43	3'-6" x 7'-0"	1 3/4"	A	WD	1	HM	1/A601	2/A601	3/A601	--	HW-1L	--
G44	3'-6" x 7'-0"	1 3/4"	A	WD	1	HM	1/A601	2/A601	3/A601	--	HW-1L	--
G45	3'-0" x 7'-0"	1 3/4"	A	WD	1	HM	1/A601	2/A601	3/A601	--	HW-4J	--
G46	3'-0" x 7'-0"	1 3/4"	A	WD	1	HM	1/A601	2/A601	3/A601	--	HW-3G	--
G47	3'-0" x 7'-0"	1 3/4"	A	WD	1	HM	1/A601	2/A601	3/A601	--	HW-3G	--
G48	3'-0" x 7'-0"	1 3/4"	A	WD	1	HM	1/A601	2/A601	3/A601	--	HW-5D	--
G50	3'-0" x 7'-0"	1 3/4"	A	WD	1	HM	1/A601	2/A601	3/A601	--	HW-2G	--
G51	3'-6" x 7'-0"	1 3/4"	A	WD	1	HM	1/A601	2/A601	3/A601	--	HW-2G	--
G52	3'-6" x 7'-0"	1 3/4"	C	WD	1	HM	1/A601	2/A601	3/A601	--	HW-SH-5A	--
G60	3'-6" x 7'-0"	1 3/4"	C	WD	1	HM	1/A601	2/A601	3/A601	--	HW-SH-5A	--
G61	3'-0" x 7'-0"	1 3/4"	C	WD	1	HM	1/A601	2/A601	3/A601	--	HW-3E	--
G62	3'-0" x 7'-0"	NA	--	--	1	HM	4/A601	5/A601	--	--	--	CASED OPENING
G63	3'-4" x 7'-0"	2"	--	--	--	--	--	--	--	--	--	DOOR & HW BY SOUND SUITE MFG.
G64	3'-0" x 7'-0"	2"	--	--	--	--	--	--	--	--	--	DOOR & HW BY SOUND SUITE MFG.
G65	3'-4" x 7'-0"	2"	--	--	--	--	--	--	--	--	--	DOOR & HW BY SOUND SUITE MFG.
G66	3'-0" x 7'-0"	2"	--	--	--	--	--	--	--	--	--	DOOR & HW BY SOUND SUITE MFG.
G67	3'-6" x 7'-0"	1 3/4"	A	WD	1	HM	1/A601	2/A601	3/A601	--	HW-4J	--
G68	3'-6" x 7'-0"	1 3/4"	A	WD	1	HM	1/A601	2/A601	3/A601	--	HW-4L	--
G69	3'-6" x 7'-0"	1 3/4"	C	WD	1	HM	1/A601	2/A601	3/A601	--	HW-3F	--
G70	3'-6" x 7'-0"	1 3/4"	C	WD	1	HM	1/A601	2/A601	3/A601	--	HW-3F	--
G71	3'-6" x 7'-0"	1 3/4"	C	WD	1	HM	1/A601	2/A601	3/A601	--	HW-3F	--
G72	3'-0" x 7'-0"	1 3/4"	A	WD	1	HM	1/A601	2/A601	3/A601	--	HW-5D	--
G73	3'-0" x 7'-0"	1 3/4"	A	WD	1	HM	1/A601	2/A601	3/A601	--	HW-3E	--
G74	3'-6" x 7'-0"	1 3/4"	C	WD	1	HM	1/A601	2/A601	3/A601	--	HW-3H	--
G75	3'-6" x 7'-0"	1 3/4"	C	WD	1	HM	1/A601	2/A601	3/A601	--	HW-4N	--
G76	3'-6" x 7'-0"	1 3/4"	C	WD	1	HM	1/A601	2/A601	3/A601	--	HW-3H	--
G77	PR 2'-0" x 7'-0"	1 3/4"	A	WD	1	HM	1/A601	2/A601	3/A601	--	HW-11D	--
G78	3'-0" x 7'-0"	1 3/4"	A	WD	1	HM	1/A601	2/A601	3/A601	--	HW-2G	--
G79	3'-6" x 7'-0"	1 3/4"	A	WD	1	HM	1/A601	2/A601	3/A601	--	HW-2G	--
G80	3'-6" x 7'-0"	1 3/4"	A	WD	1	HM	1/A601	2/A601	3/A601	--	HW-4L	--
G81	3'-6" x 7'-0"	1 3/4"	A	WD	1	HM	1/A601	2/A601	3/A601	--	HW-3H	--
G82	3'-6" x 7'-0"	1 3/4"	A	WD	1	HM	1/A601	2/A601	3/A601	--	HW-4L	--
G83	3'-6" x 7'-0"	1 3/4"	C	WD	1	HM	1/A601	2/A601	3/A601	--	HW-4E	--
G84	3'-6" x 7'-0"	1 3/4"	C	WD	1	HM	1/A601	2/A601	3/A601	--	HW-4E	--
G85	3'-6" x 7'-0"	1 3/4"	C	WD	1	HM	1/A601	2/A601	3/A601	--	HW-4E	--
SG03	3'-6" x 7'-0"	1 3/4"	B	WD	1	HM	1/A601	2/A601	3/A601	B-1HR	HW-SH-4B	--
SG04	3'-6" x 7'-0"	1 3/4"	B	WD	1	HM	1/A601	2/A601	3/A601	B-1HR	HW-SH-4B	--

FIRST FLOOR - DOOR AND FRAME SCHEDULE

DOOR NO.	DOOR SIZE W x H	DOOR SIZE THK	DOOR TYPE	DOOR MATL	FRAME TYPE	FRAME MATL	DETAIL HEAD	DETAIL JAMB	DETAIL SILL	FIRE RATING	HDWR SET	REMARKS
134	3'-0" x 7'-0"	1 3/4"	A	WD	1	HM	1/A601	2/A601	3/A601	--	HW-SH-3D	--
137	3'-0" x 7'-0"	1 3/4"	A	WD	1	HM	1/A601	2/A601	3/A601	--	HW-SH-3D	--
156	3'-6" x 7'-0"	1 3/4"	A	WD	1	HM	1/A601	2/A601	3/A601	--	HW-IL	--
158	3'-6" x 7'-0"	1 3/4"	A	WD	1	HM	1/A601	2/A601	3/A601	--	HW-IL	--
159	3'-6" x 7'-0"	1 3/4"	A	WD	1	HM	1/A601	2/A601	3/A601	--	HW-IL	--
160	3'-6" x 7'-0"	1 3/4"	A	WD	1	HM	1/A601	2/A601	3/A601	--	HW-IL	--
161	3'-6" x 7'-0"	1 3/4"	A	WD	1	HM	1/A601	2/A601	3/A601	--	HW-IL	--
162	3'-6" x 7'-0"	1 3/4"	A	WD	1	HM	1/A601	2/A601	3/A601	--	HW-IL	--
163	3'-6" x 7'-0"	1 3/4"	A	WD	1	HM	1/A601	2/A601	3/A601	--	HW-2G	--
164	3'-6" x 7'-0"	1 3/4"	A	WD	1	HM	1/A601	2/A601	3/A601	--	HW-IL	--
165	3'-6" x 7'-0"	1 3/4"	A	WD	1	HM	1/A601	2/A601	3/A601	--	HW-IL	--
166	3'-0" x 7'-0"	1 3/4"	C	WD	1	HM	1/A601	2/A601	3/A601	--	HW-4J	--
167	3'-0" x 7'-0"	1 3/4"	A	WD	1	HM	1/A601	2/A601	3/A601	--	HW-SH-3C	--
168	3'-0" x 7'-0"	1 3/4"	A	WD	1	HM	1/A601	2/A601	3/A601	--	HW-SH-3C	--
169	3'-0" x 7'-0"	1 3/4"	A	WD	1	HM	1/A601	2/A601	3/A601	--	HW-5D	--
170	3'-6" x 7'-0"	1 3/4"	A	WD	1	HM	1/A601	2/A601	3/A601	--	HW-2G	--
171	3'-0" x 7'-0"	1 3/4"	A	WD	1	HM	1/A601	2/A601	3/A601	--	HW-5D	--
172	3'-0" x 7'-0"	1 3/4"	A	WD	1	HM	1/A601	2/A601	3/A601	--	HW-5D	--
173	3'-0" x 7'-0"	1 3/4"	A	WD	1	HM	1/A601	2/A601	3/A601	--	HW-SH-3D	--
174	4'-0" x 7'-0"	1 3/4"	A	WD	1	HM	1/A601	2/A601	3/A601	--	HW-IL	--
179	3'-0" x 7'-0"	1 3/4"	A	WD	1	HM	1/A601	2/A601	3/A601	--	HW-SH-3D	--
181	3'-6" x 7'-0"	1 3/4"	A	WD	1	HM	1/A601	2/A601	3/A601	--	HW-IL	--
182	3'-6" x 7'-0"	1 3/4"	A	WD	1	HM	1/A601	2/A601	3/A601	--	HW-IL	--
183	3'-6" x 7'-0"	1 3/4"	A	WD	1	HM	1/A601	2/A601	3/A601	--	HW-IL	--
184	3'-6" x 7'-0"	1 3/4"	A	WD	1	HM	1/A601	2/A601	3/A601	--	HW-IL	--
185	3'-6" x 7'-0"	1 3/4"	A	WD	1	HM	1/A601	2/A601	3/A601	--	HW-IL	--
186	3'-6" x 7'-0"	1 3/4"	A	WD	1	HM	1/A601	2/A601	3/A601	--	HW-2G	--
187	3'-6" x 7'-0"	1 3/4"	A	WD	1	HM	1/A601	2/A601	3/A601	--	HW-IL	--
188	3'-6" x 7'-0"	1 3/4"	A	WD	1	HM	1/A601	2/A601	3/A601	--	HW-IL	--
189	3'-6" x 7'-0"	1 3/4"	A	WD	1	HM	1/A601	2/A601	3/A601	--	HW-IL	--
190	3'-0" x 7'-0"	1 3/4"	A	WD	1	HM	1/A601	2/A601	3/A601	--	HW-SH-3C	--
191	3'-0" x 7'-0"	1 3/4"	A	WD	1	HM	1/A601	2/A601	3/A601	--	HW-SH-3C	--
192	3'-0" x 7'-0"	1 3/4"	C	WD	1	HM	1/A601	2/A601	3/A601	--	HW-4J	--
193	3'-6" x 7'-0"	1 3/4"	A	WD	1	HM	1/A601	2/A601	3/A601	--	HW-2G	--
194	3'-0" x 7'-0"	1 3/4"	A	WD	1	HM	1/A601	2/A601	3/A601	--	HW-5D	--
195	3'-0" x 7'-0"	1 3/4"	A	WD	1	HM	1/A601	2/A601	3/A601	--	HW-5D	--
196	3'-0" x 7'-0"	1 3/4"	A	WD	1	HM	1/A601	2/A601	3/A601	--	HW-SH-3D	--
197	4'-0" x 7'-0"	1 3/4"	A	WD	1	HM	1/A601	2/A601	3/A601	--	HW-IL	--
198	3'-0" x 7'-0"	1 3/4"	A	WD	1	HM	1/A601	2/A601	3/A601	--	HW-5D	--
199	3'-0" x 7'-0"	1 3/4"	A	WD	1	HM	1/A601	2/A601	3/A601	--	HW-5D	--
C110	3'-8" x 7'-0"	1 3/4"	C	WD	1	HM	1/A601	2/A601	3/A601	--	HW-SH-5A	--
C112	3'-0" x 7'-0"	1 3/4"	C	WD	1	HM	1/A601	2/A601	3/A601	--	HW-4E	--
C120	3'-8" x 7'-0"	1 3/4"	C	WD	1	HM	1/A601	2/A601	3/A601	--	HW-SH-5A	--
C121	3'-0" x 7'-0"	1 3/4"	C	WD	1	HM	1/A601	2/A601	3/A601	--	HW-4E	--
S103	3'-6" x 7'-0"	1 3/4"	B	WD	1	HM	1/A601	2/A601	3/A601	B-1 1/2" HR	HW-SH-4B	--
S104	3'-6" x 7'-0"	1 3/4"	B	WD	1	HM	1/A601	2/A601	3/A601	B-1 1/2" HR	HW-SH-4B	--

SECOND FLOOR - DOOR AND FRAME SCHEDULE

DOOR NO.	DOOR SIZE W x H	DOOR SIZE THK	DOOR TYPE	DOOR MATL	FRAME TYPE	FRAME MATL	DETAIL HEAD	DETAIL JAMB	DETAIL SILL	FIRE RATING	HDWR SET	REMARKS
234	3'-0" x 7'-0"	1 3/4"	A	WD	1	HM	1/A601	2/A601	3/A601	--	HW-SH-3D	--
237	3'-0" x 7'-0"	1 3/4"	A	WD	1	HM	1/A601	2/A601	3/A601	--	HW-SH-3D	--
256	3'-6" x 7'-0"	1 3/4"	A	WD	1	HM	1/A601	2/A601	3/A601	--	HW-IL	--
258	3'-6" x 7'-0"	1 3/4"	A	WD	1	HM	1/A601	2/A601	3/A601	--	HW-IL	--
259	3'-6" x 7'-0"	1 3/4"	A	WD	1	HM	1/A601	2/A601	3/A601	--	HW-IL	--
260	3'-6" x 7'-0"	1 3/4"	A	WD	1	HM	1/A601	2/A601	3/A601	--	HW-IL	--
261	3'-6" x 7'-0"	1 3/4"	A	WD	1	HM	1/A601	2/A601	3/A601	--	HW-IL	--
262	3'-6" x 7'-0"	1 3/4"	A	WD	1	HM	1/A601	2/A601	3/A601	--	HW-IL	--
263	3'-6" x 7'-0"	1 3/4"	A	WD	1	HM	1/A601	2/A601	3/A601	--	HW-2G	--
264	3'-6" x 7'-0"	1 3/4"	A	WD	1	HM	1/A601	2/A601	3/A601	--	HW-IL	--
265	3'-6" x 7'-0"	1 3/4"	A	WD	1	HM	1/A601	2/A601	3/A601	--	HW-IL	--
266	3'-0" x 7'-0"	1 3/4"	C	WD	1	HM	1/A601	2/A601	3/A601	--	HW-4J	--
267	3'-0" x 7'-0"	1 3/4"	A	WD	1	HM	1/A601	2/A601	3/A601	--	HW-SH-3D	--
268	3'-0" x 7'-0"	1 3/4"	A	WD	1	HM	1/A601	2/A601	3/A601	--	HW-SH-3D	--
269	3'-0" x 7'-0"	1 3/4"	A	WD	1	HM	1/A601	2/A601	3/A601	--	HW-SH-3D	--
270	3'-6" x 7'-0"	1 3/4"	A	WD	1	HM	1/A601	2/A601	3/A601	--	HW-2G	--
271	3'-0" x 7'-0"	1 3/4"	A	WD	1	HM	1/A601	2/A601	3/A601	--	HW-5D	--
272	3'-0" x 7'-0"	1 3/4"	A	WD	1	HM	1/A601	2/A601	3/A601	--	HW-5D	--
273	3'-0" x 7'-0"	1 3/4"	A	WD	1	HM	1/A601	2/A601	3/A601	--	HW-SH-3D	--
274	4'-0" x 7'-0"	1 3/4"	A	WD	1	HM	1/A601	2/A601	3/A601	--	HW-IL	--
279	3'-0" x 7'-0"	1 3/4"	A	WD	1	HM	1/A601	2/A601	3/A601	--	HW-SH-3D	--
281	3'-6" x 7'-0"	1 3/4"	A	WD	1	HM	1/A601	2/A601	3/A601	--	HW-IL	--
282	3'-6" x 7'-0"	1 3/4"	A	WD	1	HM	1/A601	2/A601	3/A601	--	HW-IL	--
283	3'-6" x 7'-0"	1 3/4"	A	WD	1	HM	1/A601	2/A601	3/A601	--	HW-IL	--
284	3'-6" x 7'-0"	1 3/4"	A	WD	1	HM	1/A601	2/A601	3/A601	--	HW-IL	--
285	3'-6" x 7'-0"	1 3/4"	A	WD	1	HM	1/A601	2/A601	3/A601	--	HW-IL	--
286	3'-6" x 7'-0"	1 3/4"	A	WD	1	HM	1/A601	2/A601	3/A601	--	HW-2G	--
287	3'-6" x 7'-0"	1 3/4"	A	WD	1	HM	1/A601	2/A601	3/A601	--	HW-IL	--
288	3'-6" x 7'-0"	1 3/4"	A	WD	1	HM	1/A601	2/A601	3/A601	--	HW-IL	--
289	3'-6" x 7'-0"	1 3/4"	A	WD	1	HM	1/A601	2/A601	3/A601	--	HW-IL	--
290	3'-0" x 7'-0"	1 3/4"	A	WD	1	HM	1/A601	2/A601	3/A601	--	HW-SH-3D	--
291	3'-0" x 7'-0"	1 3/4"	A	WD	1	HM	1/A601	2/A601	3/A601	--	HW-SH-3D	--
292	3'-0" x 7'-0"	1 3/4"	C	WD	1	HM	1/A601	2/A601	3/A601	--	HW-4J	--
293	3'-6" x 7'-0"	1 3/4"	A	WD	1	HM	1/A601	2/A601	3/A601	--	HW-2G	--
294	3'-0" x 7'-0"	1 3/4"	A	WD	1	HM	1/A601	2/A601	3/A601	--	HW-5D	--
295	3'-0" x 7'-0"	1 3/4"	A	WD	1	HM	1/A601	2/A601	3/A601	--	HW-5D	--
296	3'-0" x 7'-0"	1 3/4"	A	WD	1	HM	1/A601	2/A601	3/A601	--	HW-SH-3D	--
297	4'-0" x 7'-0"	1 3/4"	A	WD	1	HM	1/A601	2/A601	3/A601	--	HW-IL	--
298	3'-0" x 7'-0"	1 3/4"	A	WD	1	HM	1/A601	2/A601	3/A601	--	HW-5D	--
299	3'-0" x 7'-0"	1 3/4"	A	WD	1	HM	1/A601	2/A601	3/A601	--	HW-5D	--
C210	3'-8" x 7'-0"	1 3/4"	C	WD	1	HM	1/A601	2/A601	3/A601	--	HW-SH-5A	--
C212	3'-0" x 7'-0"	1 3/4"	C	WD	1	HM	1/A601	2/A601	3/A601	--	HW-4E	--
C220	3'-8" x 7'-0"	1 3/4"	C	WD	1	HM	1/A601	2/A601	3/A601	--	HW-SH-5A	--
C221	3'-0" x 7'-0"	1 3/4"	C	WD	1	HM	1/A601	2/A601	3/A601	--	HW-4E	--
S203	3'-6" x 7'-0"	1 3/4"	B	WD	1	HM	1/A601	2/A601	3/A601	B- 1 1/2" HR	HW-SH-4B	--
S204	3'-6" x 7'-0"	1 3/4"	B	WD	1	HM	1/A601	2/A601	3/A601	B- 1 1/2" HR	HW-SH-4B	--

1

BASEMENT LEVEL - DOOR AND FRAME SCHEDULE

DOOR NO.	DOOR SIZE W x H	DOOR SIZE THK	DOOR TYPE	DOOR MATL	FRAME TYPE	FRAME MATL	DETAIL HEAD	DETAIL JAMB	DETAIL SILL	FIRE RATING	HDWR SET	REMARKS
B01A	PR 3'-0" x 7'-0"	1 3/4"	A	HM	2	HM	11/A601	10/A601	--	--	HW-E8	--
B01B	3'-0" x 7'-0"	1 3/4"	A	HM	2	HM	5/A601	7/A601	-	C-3/4HR	HW-4F	--
B02	3'-0" x 7'-0"	1 3/4"	A	HM	2	HM	5/A601	7/A601	--	C-3/4HR	HW-4F	--
B03	3'-0" x 7'-0"	1 3/4"	A	HM	2	HM	5/A601	7/A601	--	C-3/4HR	HW-4F	--
B04	3'-0" x 7'-0"	1 3/4"	A	HM	2	HM	5/A601	7/A601	--	C-3/4HR	HW-4F	--
B05A	PR 3'-0" x 7'-0"	1 3/4"	A	HM	2	HM	11/A601	10/A601	--	--	HW-E8	--
B05B	3'-0" x 7'-0"	1 3/4"	A	HM	2	HM	5/A601	7/A601	--	C-3/4HR	HW-4F	--
B06	3'-0" x 7'-0"	1 3/4"	A	HM	2	HM	5/A601	7/A601	--	C-3/4HR	HW-4F	--
B07	3'-0" x 7'-0"	1 3/4"	A	HM	2	HM	5/A601	7/A601	--	C-3/4HR	HW-4F	--
B08A	3'-0" x 7'-0"	1 3/4"	B	HM	2	HM	9/A601	8/A601	--	C-3/4HR	HW-1A	--
B08B	3'-0" x 7'-0"	1 3/4"	A	HM	2	HM	5/A601	7/A601	--	C-3/4HR	HW-4F	--
CB02A	3'-6" x 7'-0"	1 3/4"	A	HM	2	HM	11/A601	10/A601	--	--	HW-SH-11	--
CB02B	3'-6" x 7'-0"	1 3/4"	B	HM	1	HM	9/A601	8/A601	--	B-1-1/2HR	HW-1A	--
CB03A	3'-6" x 7'-0"	1 3/4"	A	HM	2	HM	11/A601	10/A601	--	--	HW-SH-11	--
CB03B	3'-6" x 7'-0"	1 3/4"	B	HM	1	HM	9/A601	8/A601	--	B-1-1/2HR	HW-1A	--
SB03	3'-6" x 7'-0"	1 3/4"	A	HM	2	HM	11/A601	10/A601	--	--	HW-SW-11	--
SB04	3'-6" x 7'-0"	1 3/4"	A	HM	2	HM	11/A601	10/A601	--	--	HW-SW-11	--

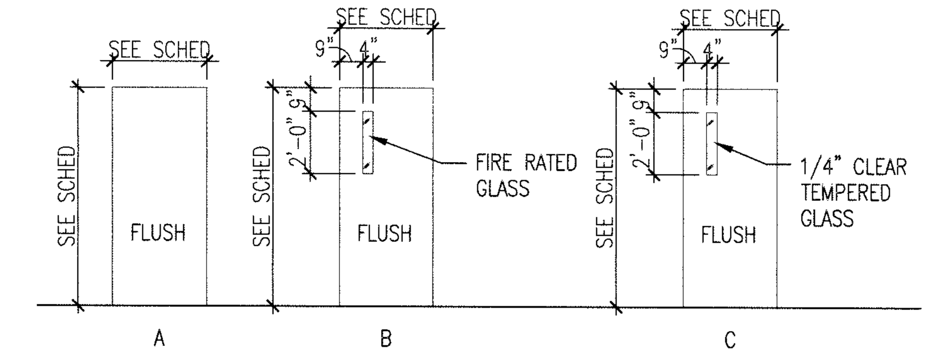

DOOR TYPES
NTS

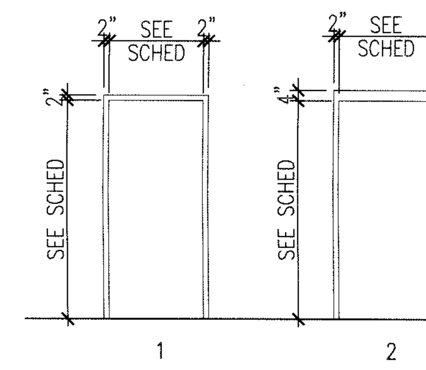

FRAME TYPES
NTS

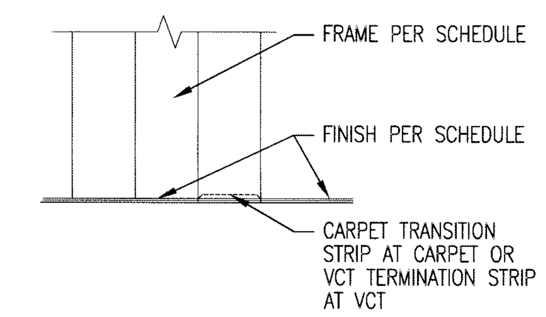

3 SILL DETAIL
A601 3" = 1'-0"

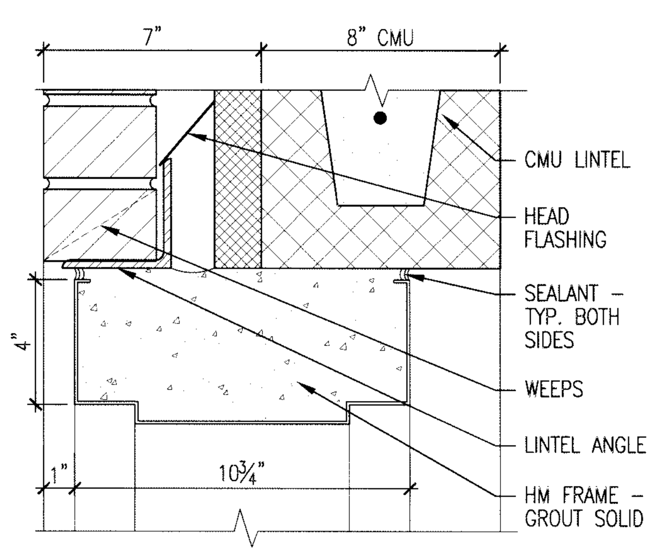

11 HEAD AT EXTERIOR WALL
A601 3" = 1'-0"

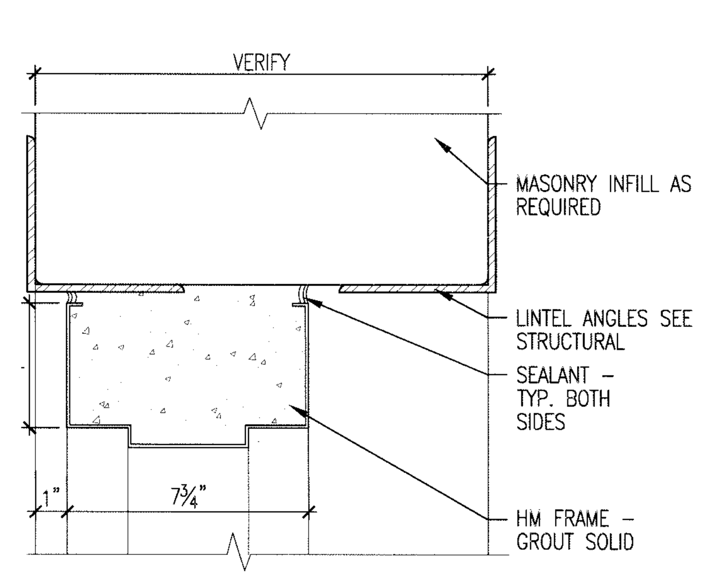

9 HEAD AT EXISTING MASONRY WALL
A601 3" = 1'-0"

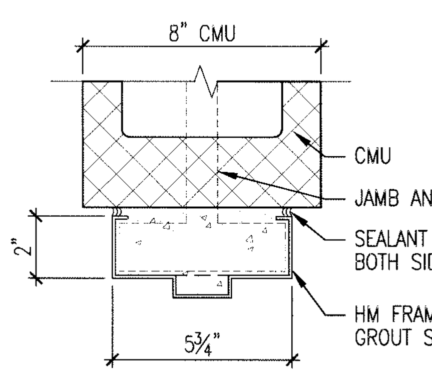

7 JAMB AT CMU
A601 3" = 1'-0"

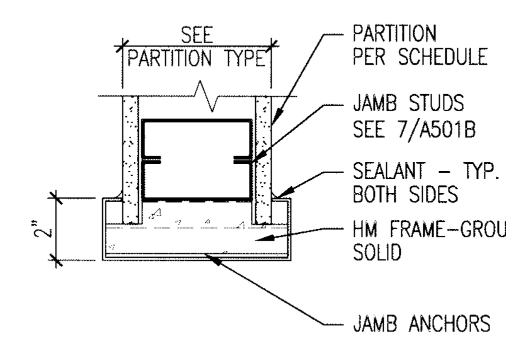

5 JAMB AT CASED OPENING
A601 3" = 1'-0"

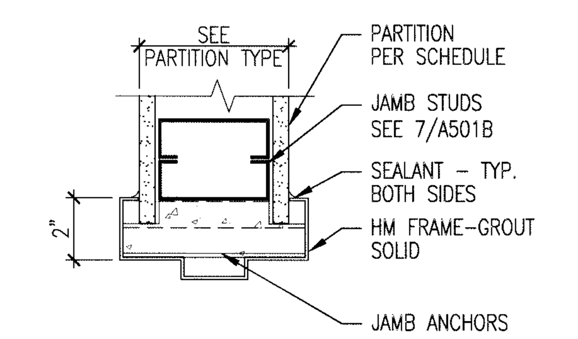

2 JAMB AT STUD PARTITION
A601 3" = 1'-0"

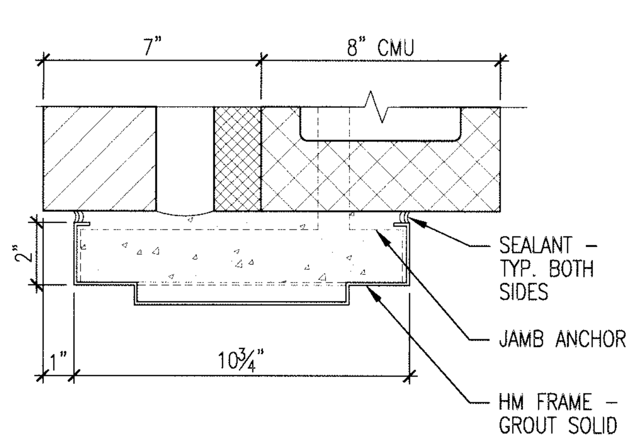

10 JAMB AT EXTERIOR WALL
A601 3" = 1'-0"

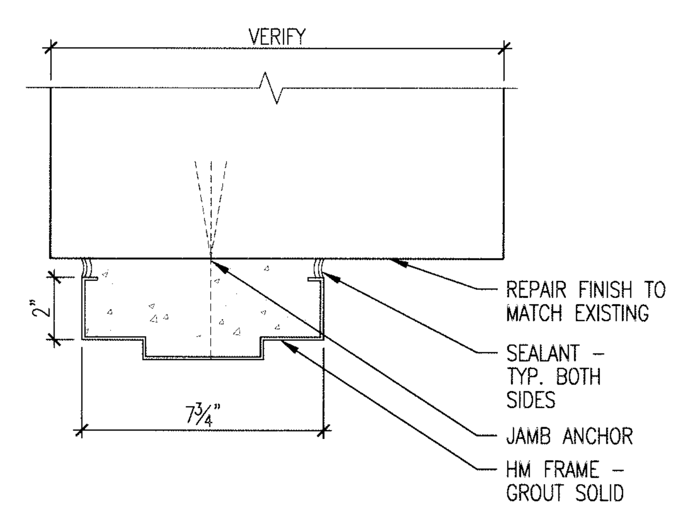

8 JAMB AT EXISTING MASONRY WALL
A601 3" = 1'-0"

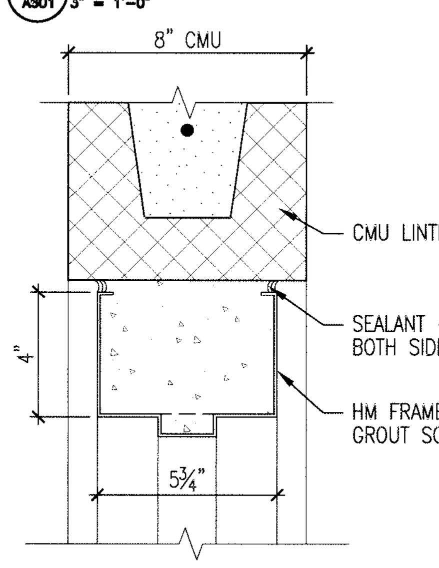

5 HEAD AT CMU
A601 3" = 1'-0"

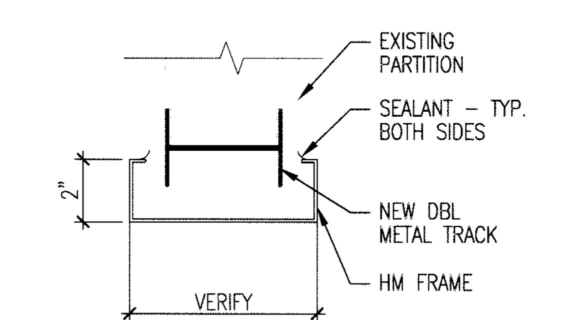

4 HEAD AT CASED OPENING
A601 3" = 1'-0"

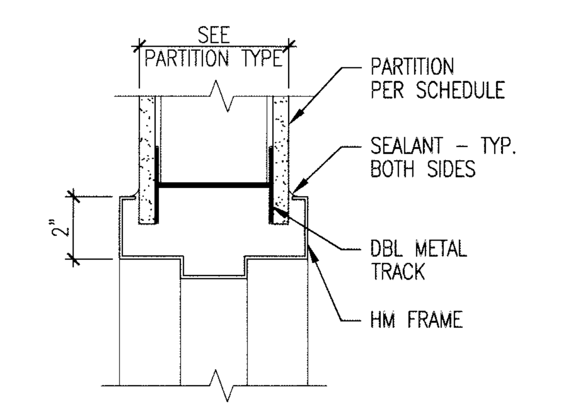

1 HEAD AT STUD PARTITION
A601 3" = 1'-0"

0' 2" 4" 8" 1'-0"
SCALE: 3"=1'-0"

FOR CONSTRUCTION

Revisions:	Date
1 SECOND FLOOR DOOR SCHEDULE	08/17/15

CONSULTANTS:

ARCHITECT:

TOLAND MOLNAR
590 Means Street, NW, Ste.200
Atlanta, GA 30318
404.214.9774

Drawing Title: DOOR AND FRAME SCHEDULE AND DETAILS

Approved: Chief Engineer

Project Title: EXPAND OUTPATIENT CLINIC SERVICES

Location: TUSCALOOSA AL.

Date: 03-15-2015 | Checked: DM | Drawn:

Project Number: 679-315

Building Number: 38

Drawing Number: A601

Dwg. 70 of 188

OFFICE OF CONSTRUCTION AND FACILITIES MANAGEMENT

Department of Veterans Affairs

VA FORM 08-6231

Plotted by: OdalM
Plotted Date: Aug 17, 2015 – 2:46pm