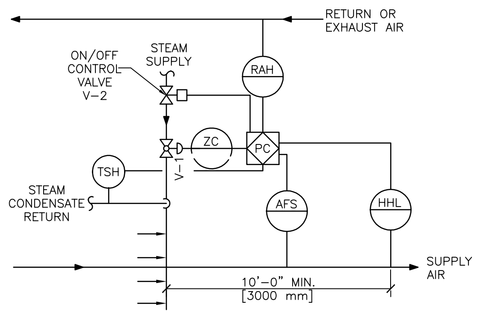

STEAM HUMIDIFIER
RETURN (OR EXHAUST) AIR HUMIDITY SHALL BE MONITORED. ON A CALL FOR HUMIDIFICATION, HUMIDIFIER VALVE V-1 SHALL MODULATE TO MAINTAIN THE RETURN (OR EXHAUST) AIR HUMIDITY SET POINT TO 30% (ADJUSTABLE). PRIOR TO ACTIVATION OF V-1, THE ON/OFF CONTROL VALVE V-2 SHALL BE ENABLED THROUGH ECC AND JACKET TEMPERATURE SENSED BY TSH SHALL BE WARM ENOUGH TO PREVENT CONDENSATION. THE HIGH LIMIT HUMIDITY SENSOR, LOCATED IN THE SUPPLY AIR DUCT 10 FEET AWAY FROM THE HUMIDIFIER SHALL DISABLE THE HUMIDIFIER AND GIVE AN ALARM SIGNAL TO THE ECC, IF THE SUPPLY AIR HUMIDITY EXCEEDS 90% RH (ADJUSTABLE). THE AIRFLOW SWITCH SHALL PROVE AIRFLOW BEFORE HUMIDITY CONTROLS ARE ACTIVATED.

4 STEAM HUMIDIFIER CONTROLS
NTS

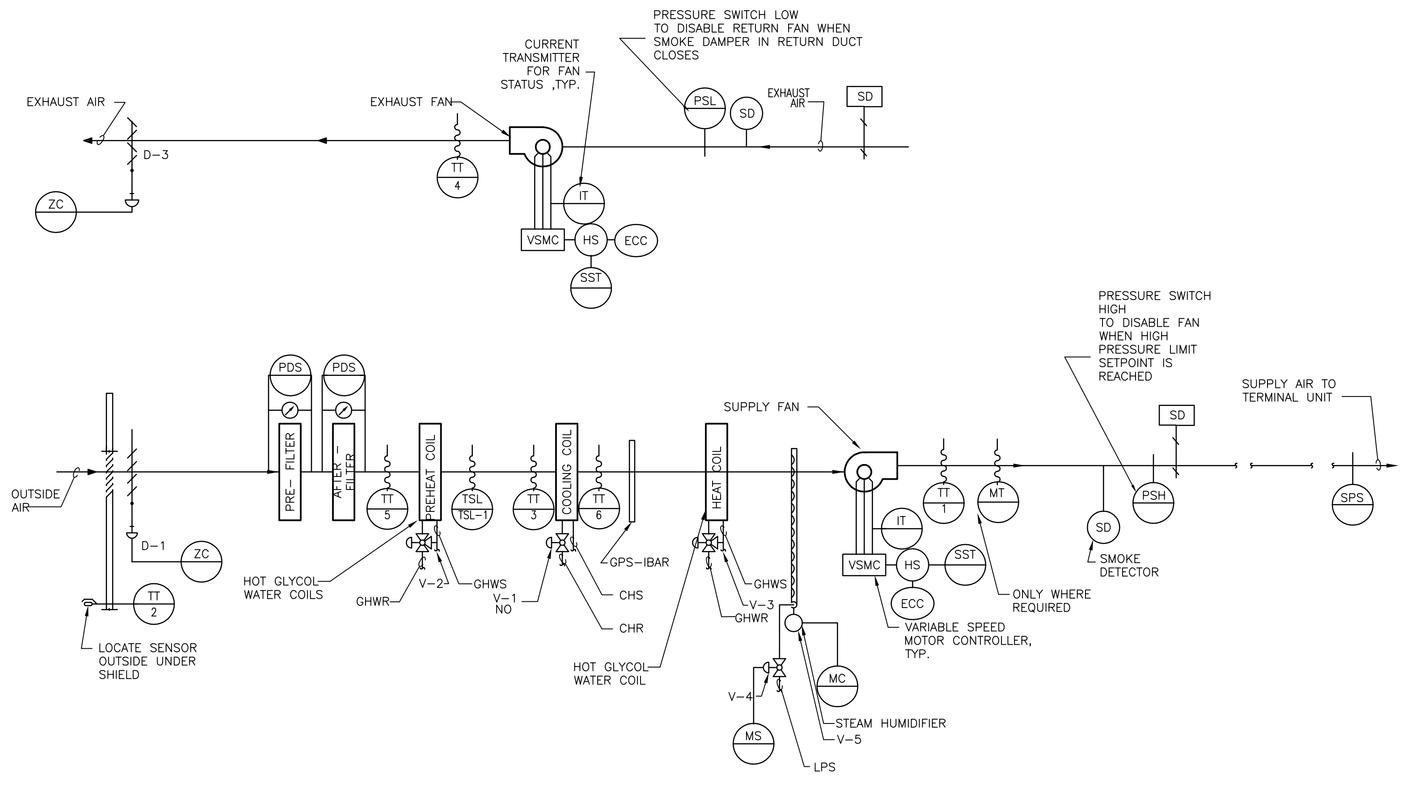

3 VARIABLE AIR VOLUME AIR HANDLING UNIT WITH 100% OUTSIDE AIR CONTROL DIAGRAM
NTS

SEQUENCE OF CONTROLS

GENERAL: DRY BULB SENSOR WITH ITS RECEIVER-CONTROLLER IN THE LOCAL PANEL, LOCATED IN THE OUTSIDE AIR WILL AUTOMATICALLY SWITCH SYSTEM FROM SUMMER TO WINTER MODE AT 55°F ADJUSTABLE. A MANUAL "SUMMER-AUTO-WINTER" SWITCH WILL BE MOUNTED AT LOCAL SYSTEM PANEL.

WHEN SUPPLY FAN IS ON, OUTSIDE AIR DAMPER IS OPEN 100%. WHEN SUPPLY FAN IS OFF, OUTSIDE AIR DAMPER IS CLOSED COMPLETELY.

SUMMER MODE: WHEN OUTSIDE AIR TEMPERATURE IS ABOVE 55°F, HEATING COIL WILL BE IN CLOSED POSITION. EXHAUST DAMPERS WILL BE IN OPEN POSITION. TEMPERATURE CONTROLLER IN LOCAL T.C. PANEL WITH ITS SENSOR LOCATED IN THE DISCHARGE AIR WILL CYCLE COOLING COIL TO MAINTAIN DISCHARGE AIR TEMPERATURE SET POINT. A HUMIDITY CONTROLLER IN LOCAL T.C. PANEL WITH ITS SENSOR LOCATED IN THE SPACE (ROOM) WILL OPEN THE CHILLED WATER VALVE WHEN ROOM RELATIVE HUMIDITY REACHES THE HIGH LIMIT OF 55%. A REHEAT COIL TEMPERATURE CONTROLLER IN LOCAL T.C. PANEL THROUGH COMMON DISCHARGE THERMOSTAT WILL MODULATE REHEAT VALVE TO MAINTAIN AIR TEMPERATURE SET POINT.

WINTER MODE: WHEN OUTSIDE AIR TEMPERATURE IS BELOW 55°F, COOLING COIL VALVE WILL BE IN ITS NORMALLY CLOSED POSITION. TEMPERATURE CONTROLLER WITH ITS SENSOR LOCATED IN THE DISCHARGE AIR WILL MODULATE THREE-WAY HEATING COIL VALVE TO MAINTAIN DISCHARGE AIR SETPOINT. HUMIDITY CONTROLLER IN LOCAL T.C. PANEL WITH ITS SENSOR LOCATED IN THE SPACE (ROOM) WILL CYCLE STEAM HUMIDFIER VALVE TO MAINTAIN 35% RELATIVE HUMIDITY.

VARIABLE AIR VOLUME CONTROLS: STATIC PRESSURE CONTROL WILL BE PROVIDED THROUGH THE MEANS OF INLET VANES ON THE SUPPLY AND EXHAUST FANS. STATIC PRESSURE SENSOR LOCATED 3/4 OF THE WAY INTO THE SUPPLY SYSTEM BEFORE THE FIRST V.A.V. BOX WILL SENSE THE SUPPLY AIR STATIC PRESSURE. STATIC PRESSURE CONTROLLER IN LOCAL T.C. PANEL WILL MODULATE SUPPLY INLET VANE ACTUATOR TO MAINTAIN STATIC PRESSURE SET POINT ADJUSTABLE. A DIFFERENTIAL PRESSURE TRANSMITTER WITH ITS HIGH SENSOR IN THE HALLWAY AND ITS LOW SENSOR IN THE SPACE, THROUGH RECEIVER-CONTROLLER IN LOCAL PANEL, WILL MODULATE EXHAUST FAN INLET VANE ACTUATOR TO MAINTAIN A -.1" H2O STATIC PRESSURE IN THE SPACE WITH REFERENCE TO THE HALLWAY. ON FAN SHUT-DOWN, INLET VANES WILL GO TO THEIR NORMALLY CLOSED POSITION. ON FAN START-UP, INLET VANES WILL BE DELAYED FROM OPENING A MINIMUM OF 10 SECONDS TO ALLOW FANS TO COME UP TO FULL SPEED. A HIGH STATIC PRESSURE SENSOR LOCATED ON LEAVING SIDE OF SUPPLY FAN SHALL SHUT DOWN SUPPLY FAN WHEN A HIGH STATIC PRESSURE CONDITION IS SENSED (WIRED BY T.C. CONTRACTOR.)

V.A.V BOXES: V.A.V. BOXES WILL BE CONTROLLED THROUGH LOCAL ROOM THERMOSTATS TO MAINTAIN TEMPERATURE SETPOINT. V.A.V. BOX ACTUATORS WILL BE FURNISHED BY TEMPERATURE CONTROL MANUFACTURER.

A FREEZE STAT ON DISCHARGE SIDE OF HEATING COIL, FIRE STAT ON DISCHARGE SIDE OF SUPPLY FAN, AND FIRE STAT IN RETURN DUCT SHALL SHUT DOWN SUPPLY AND EXHAUST FANS AND PLACE ALL DEVICES IN THEIR NORMAL POSITION. (WIRED BY T.C. CONTRACTOR.)

1 SEQUENCE OF OPERATION FOR VARIABLE AIR VOLUME AIR HANDLING UNIT WITH MINIMUM OUTSIDE AIR
NTS

FULLY SPRINKLERED

Revisions:	Date
ISSUED FOR CONSTRUCTION DOCUMENTS (FINAL BID)	11/26/13
ISSUED FOR 100% DESIGN SUBMITTAL	10/28/13
ISSUED FOR 75% DESIGN DEVELOPMENT	08/22/13

CONSULTANTS:

ARCHITECT/ENGINEERS:
EPSTEIN
600 West Fulton Street
Chicago, Illinois 60661

Drawing Title: MECHANICAL CONTROLS
Approved: Project Director
Project Title: REPLACEMENT OF AHU AC-30 IN BUILDING 11A
Location: 820 S. DAMEN AVE. CHICAGO, IL 60612
Date: 11/26/2013 | Checked: YW | Drawn: AM
Project Number: 537-10-122
Building Number: BUILDING 11A
Drawing Number: 11A-M-600
Dwg. 06 of 10

Office of Construction and Facilities Management
Department of Veterans Affairs

VA FORM 08-6231

D:\Projects\11000\11226\DISCIPLINE\Mech\Working\Sheets\Order #4\AC-30\11226-M-600.dwg 11-25-13 05:00:08 PM jfain