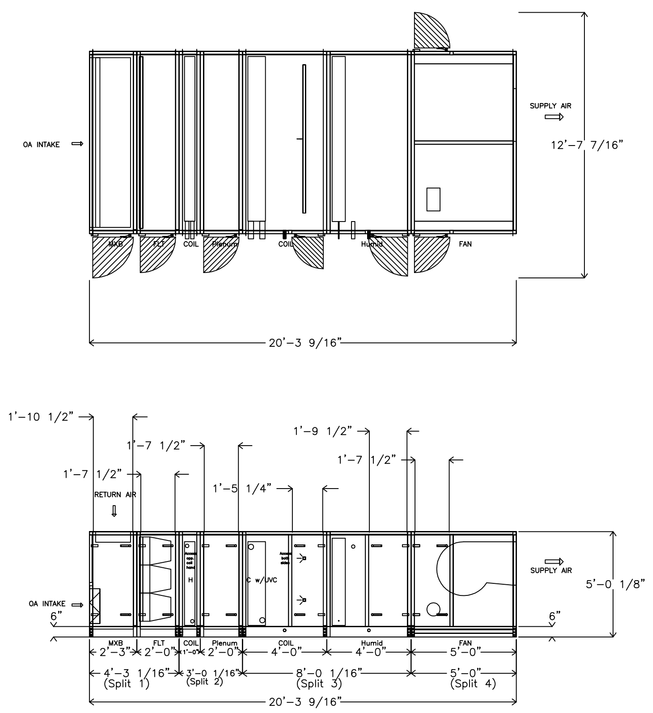

8 AIR HANDLER UNIT SECTIONS DETAIL
N.T.S.

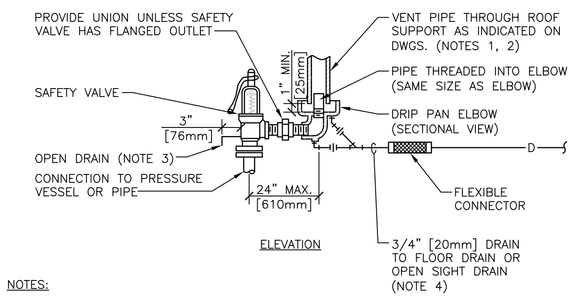

NOTES:

1. UNLESS OTHERWISE SHOWN ON THE DRAWINGS, SIZE THE VENT PIPE SO THAT STEAM IS NOT BLOWN OUT AT THE VENT PIPE ENTRANCE. UTILIZE THE CALCULATION METHOD CONTAINED IN ANSI B31.1. POWER PIPING CODE, APPENDIX II.
2. VENT PIPE SHALL TERMINATE 6' [1829mm] MIN. ABOVE FINISHED ROOF.
3. DISCHARGE OF DRAIN MUST BE DIRECTED AWAY FROM PLATFORMS OR OTHER AREAS WHICH PERSONNEL MAY OCCUPY.
4. DO NOT CONNECT ANY OTHER DRAIN TO THE DRIP PAN ELBOW DRAIN PIPE.

6 STEAM SAFETY VALVE
N.T.S.

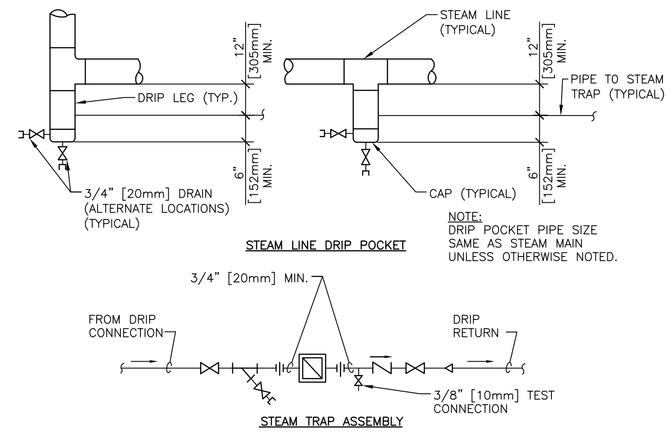

4 STEAM LINE DRIP POCKET
STEAM TRAP ASSEMBLY
N.T.S.

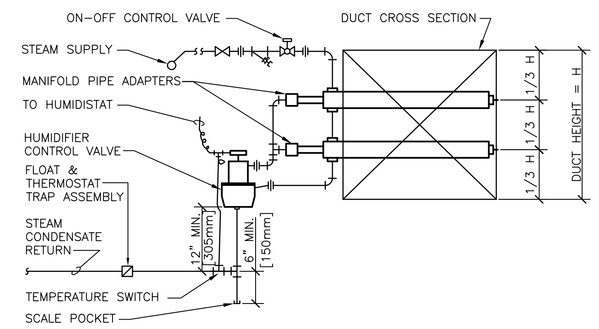

2 STEAM HUMIDIFIER -
PIPING CONNECTIONS (MULTIPLE DISPERSION TUBES)
N.T.S.

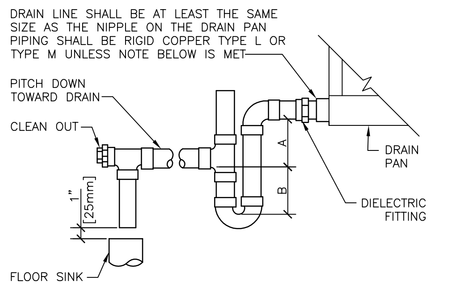

NOTE: 1. CPVC PIPE MAY BE USED ONLY IF APPROVED BY LOCAL VA AND IS INDOORS AND DOES NOT PASS THROUGH RATED BARRIERS.
2. DIELECTRIC FITTING TO BE USED WHEN TWO DISSIMILAR METALS ARE TO BE CONNECTED.

UNIT TYPE	A	B
DRAW THRU	2" [50mm] PLUS X	X
BLOW THRU	1" [25mm] MINIMUM	2X

WHERE X = STATIC PRESSURE IN PAN

7 AIR HANDLING UNIT DRAIN TRAP DETAIL
N.T.S.

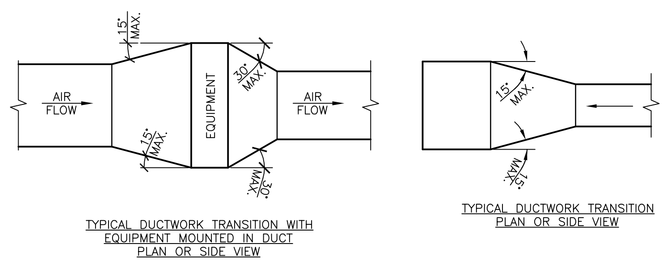

NOTE:
UNLESS OTHERWISE INDICATED ON PLANS, MAXIMUM ANGLES SHOWN SHALL APPLY.

5 DUCTWORK - REDUCTIONS + TRANSITIONS
N.T.S.

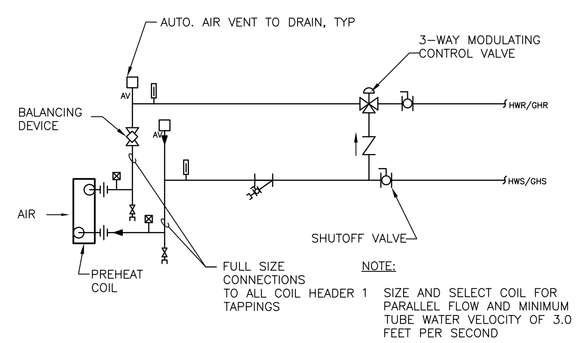

3 PREHEAT COIL (HOT WATER) - HWC-5-1
PIPING CONNECTIONS
N.T.S.

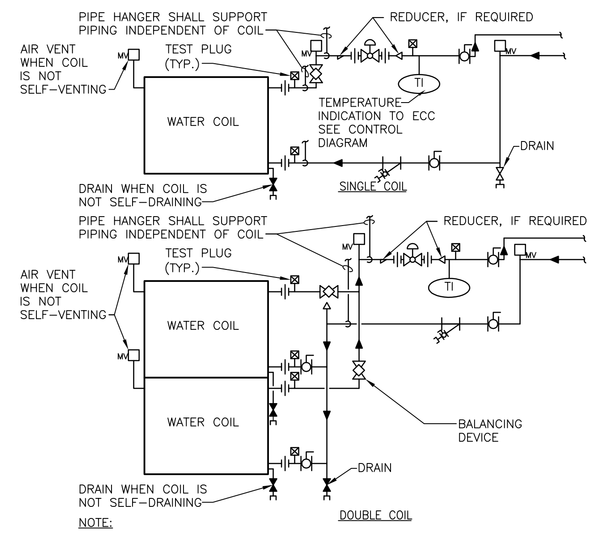

NOTE:

1. WHEN COIL IS INCLUDED IN CASING MOUNTED ON VIBRATION ISOLATORS THE FIRST 2 HANGERS FOR EACH PIPE SHALL BE SPRING & NEOPRENE TYPE. TYPE "H" FOR 4" [100mm]ø PIPE & SMALLER. TYPE "H-P" FOR 5" [125mm]ø PIPE & LARGER.
2. PIPING SHALL BE INSTALLED IN SUCH MANNER THAT IT WILL NOT BLOCK THE SWING OR USE OF ACCESS DOORS OR PANELS; NEITHER SHALL IT BLOCK THE SERVICING OF FILTERS, VALES, OR EQUIPMENT.
3. THE FLOW ELEMENT MAY BE INSTALLED IN THE SUPPLY PIPING IF THE REQUIRED MINIMUM UPSTREAM AND DOWNSTREAM DIMENSIONS CANNOT BE OBTAINED IN THE RETURN PIPING.

1 CHILLED WATER COILS - PIPING CONNECTIONS
N.T.S.

FULLY SPRINKLERED

Revisions:	Date
ISSUED FOR CONSTRUCTION DOCUMENTS (FINAL BID)	07/25/12
ISSUED FOR 100% DESIGN SUBMITTAL	06/13/12
ISSUED FOR 50% DESIGN DEVELOPMENT	04/20/12

CONSULTANTS:

ARCHITECT/ENGINEERS:
EPSTEIN
600 West Fulton Street
Chicago, Illinois 60661

Drawing Title: MECHANICAL DETAILS

Approved: Project Director

Project Title: REPLACEMENT OF AHU S-10B IN BUILDING 30

Location: 820 S. DAMEN AVE. CHICAGO, IL 60612

Date: 07/25/2012 | Checked: YW | Drawn: YW

Project Number: 537-07-138

Building Number: BUILDING 30

Drawing Number: 30-M-500

Dwg. 05 of 09

Office of Construction and Facilities Management
Department of Veterans Affairs

VA FORM 08-6231

D:\Projects\11000\11226\DISCIPLINE\Mech\Working\Sheets\Order #11226-M-500.dwg 7-23-12 02:23:32 PM yweng