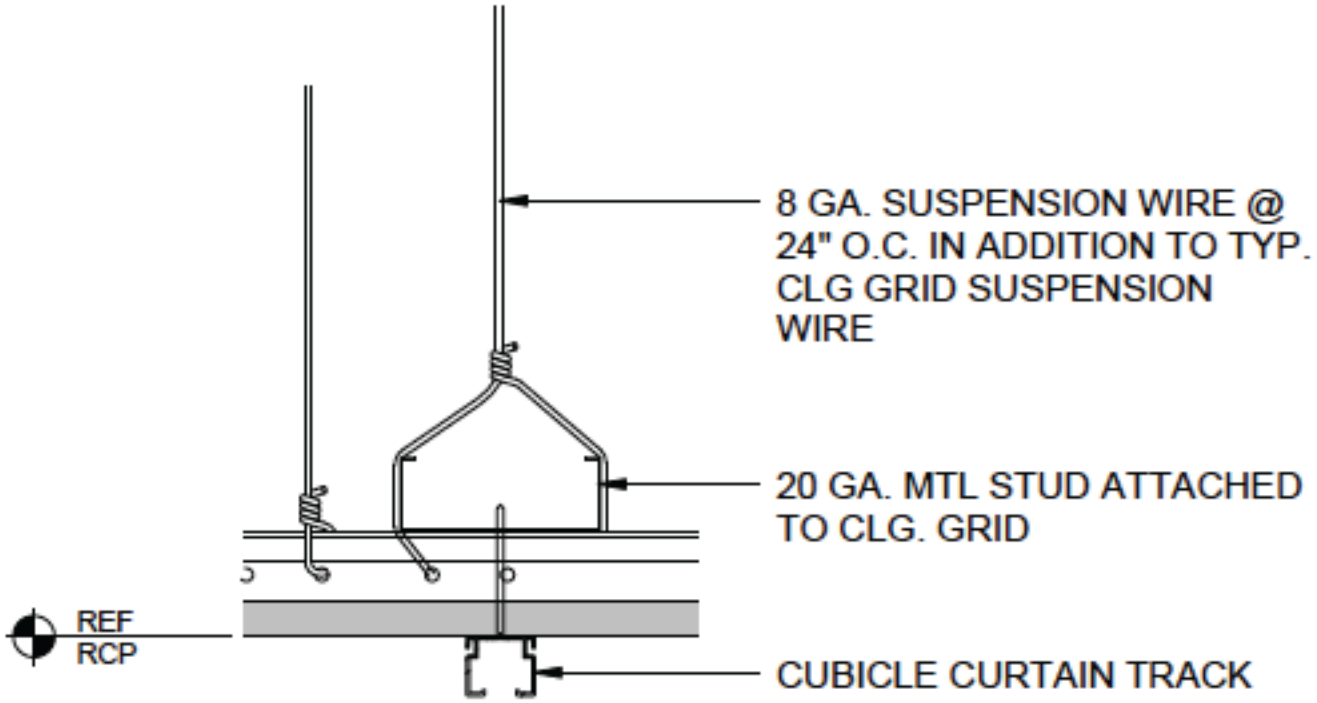

1 CUBICLE CURTAIN TRACK SUPPORT

NTS