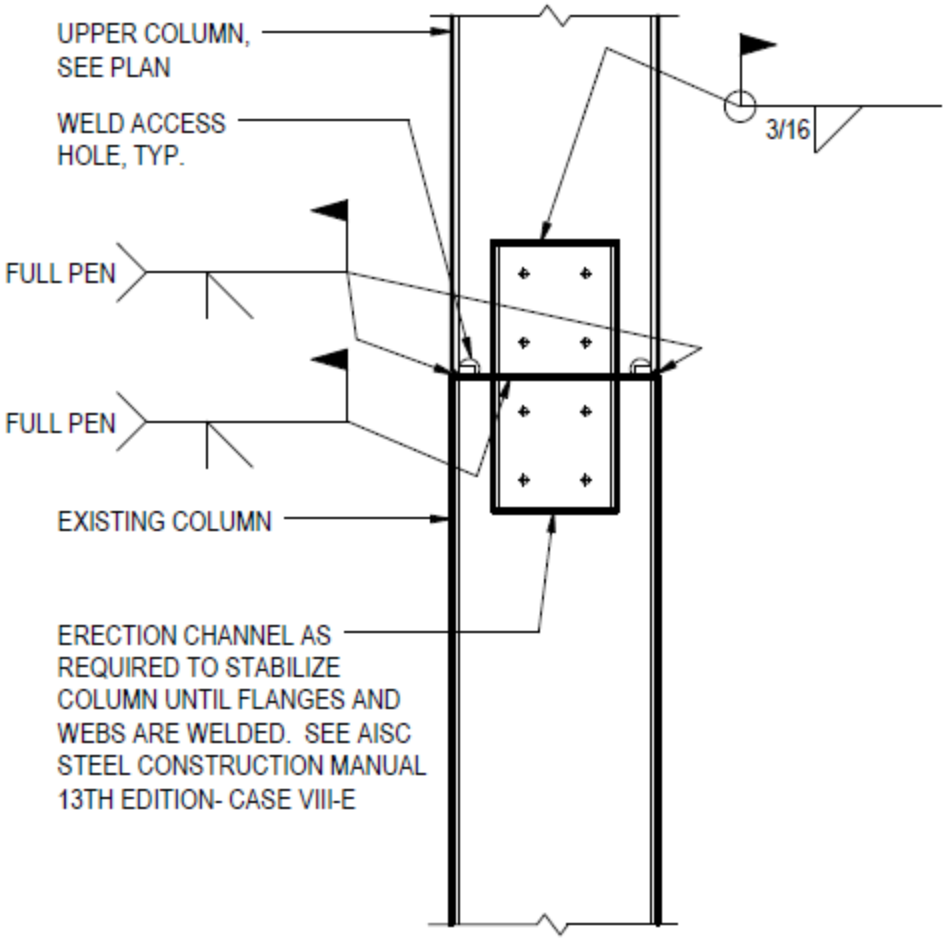

3 TYPICAL COLUMN SPLICE DETAILS

NOT TO SCALE